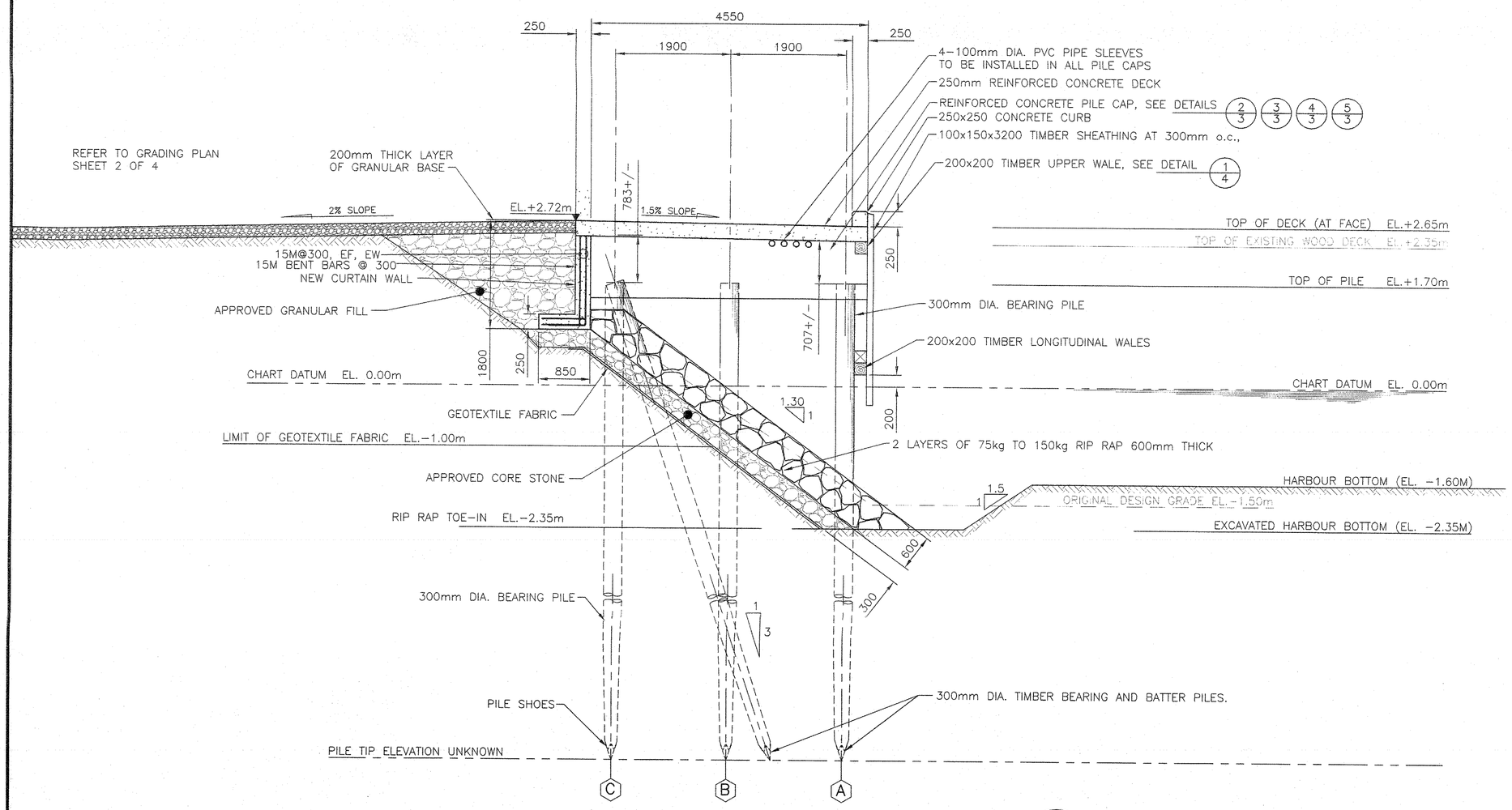

NEW MARGINAL WHARF SECTION 1/3

SCALE: 1:50

SCALE: 1:50 — 0m 1m 2m 3m 4m 5m

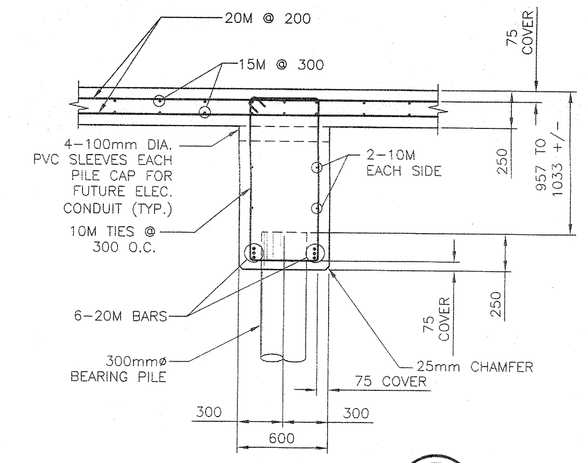

PILE CAP SECTION 3/3

SCALE: 1:25

SCALE: 1:25 — 0mm 500mm 1000mm 1500mm 2000mm 2500mm

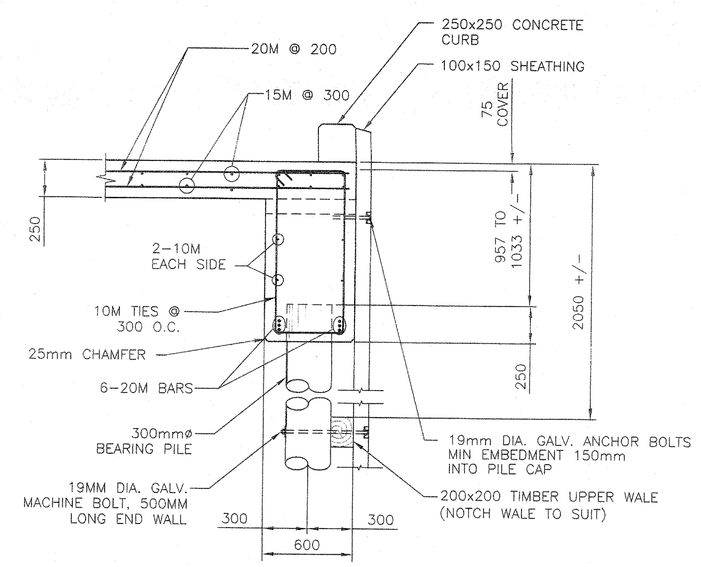

END WALL SHEATHING SECTION 7/3

SCALE: 1:25

SCALE: 1:25 — 0mm 500mm 1000mm 1500mm 2000mm 2500mm

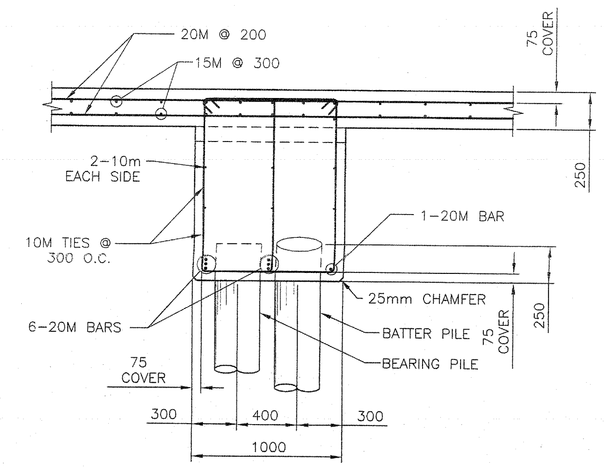

BATTER PILE CAP SECTION 4/3

SCALE: 1:25

SCALE: 1:25 — 0mm 500mm 1000mm 1500mm 2000mm 2500mm

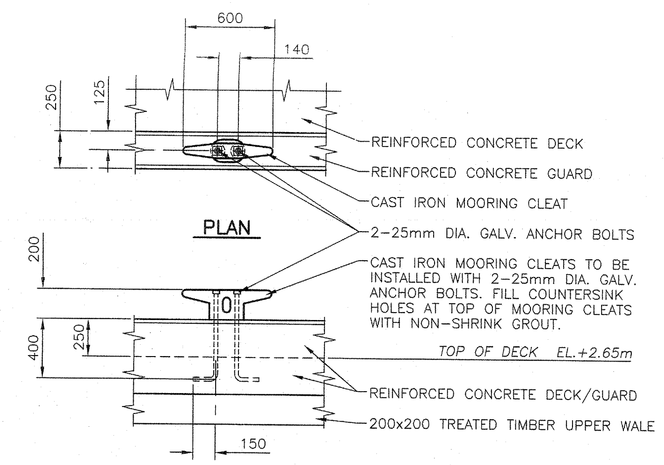

TYPICAL MOORING CLEAT DETAIL 8/3

SCALE: 1:25

SCALE: 1:25 — 0mm 500mm 1000mm 1500mm 2000mm 2500mm

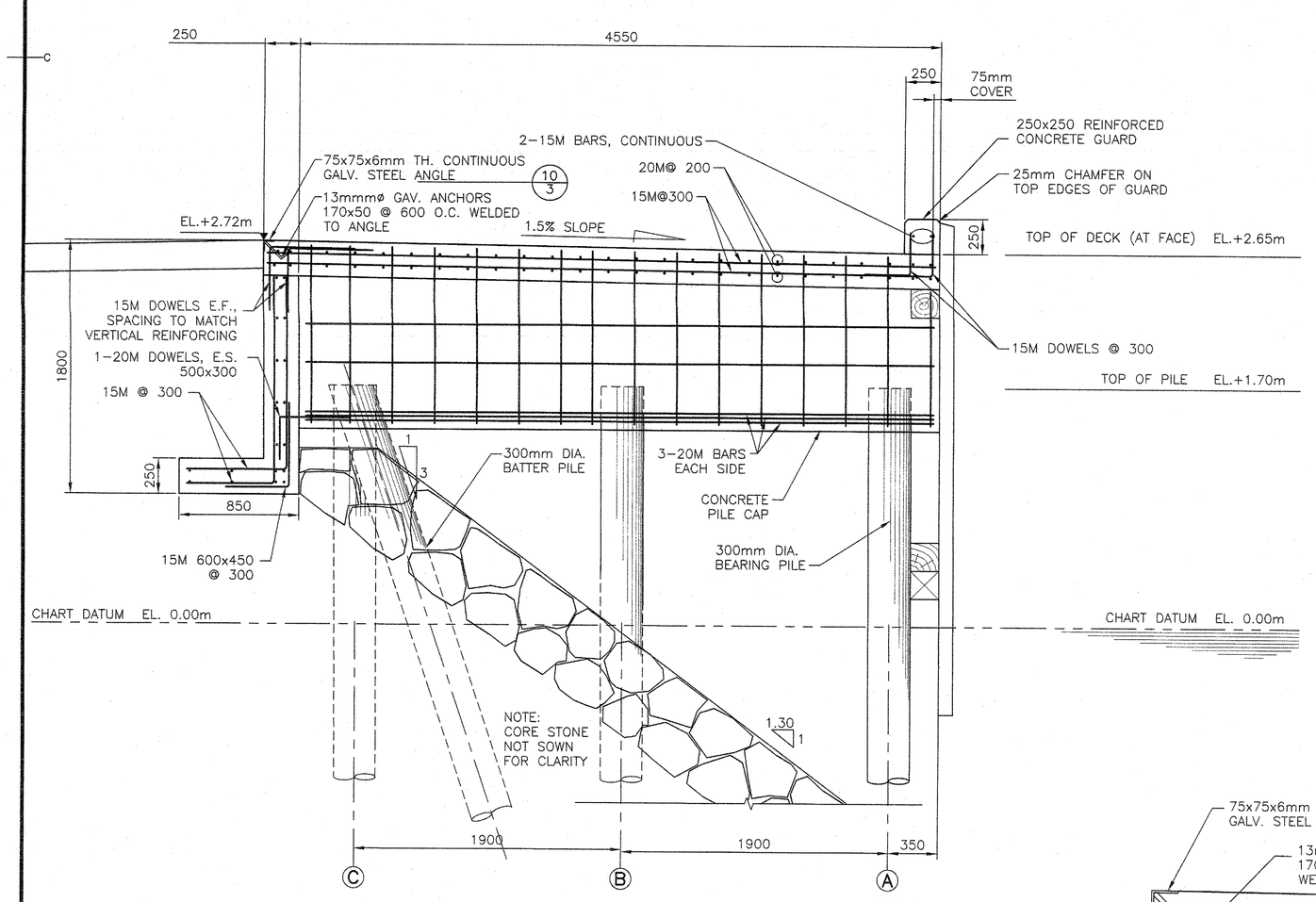

TYPICAL STEEL REINFORCING SECTION 2/3

SCALE: 1:25

SCALE: 1:25 — 0mm 500mm 1000mm 1500mm 2000mm 2500mm

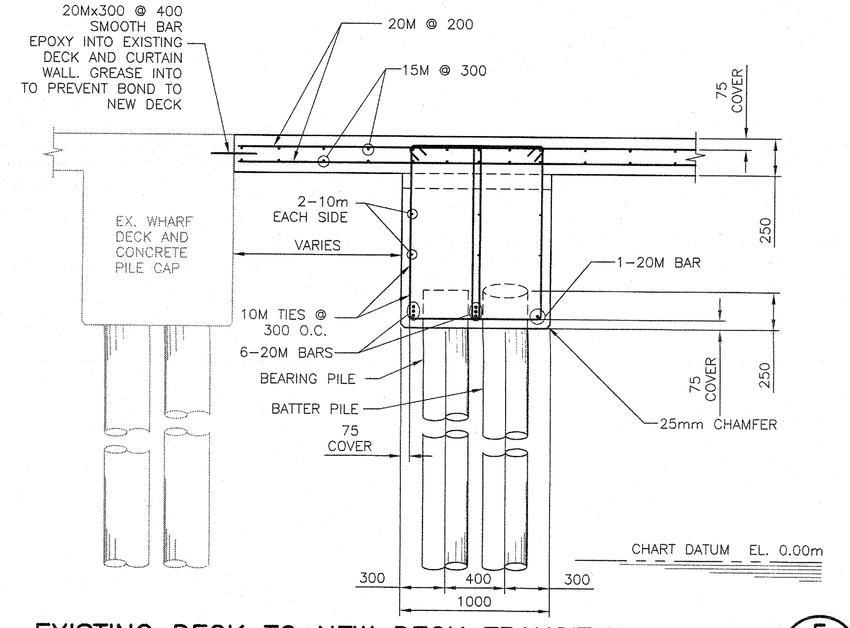

EXISTING DECK TO NEW DECK TRANSITION SECTION 5/3

SCALE: 1:25

SCALE: 1:25 — 0mm 500mm 1000mm 1500mm 2000mm 2500mm

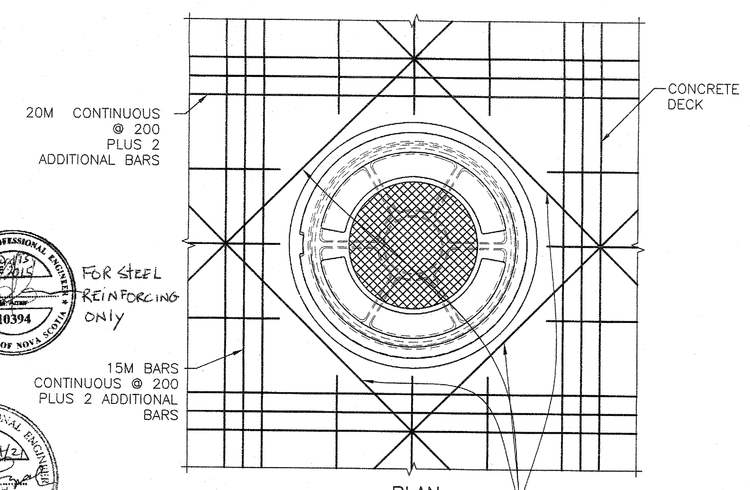

FOR STEEL REINFORCING ONLY

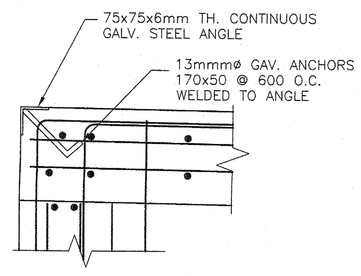

STEEL ANGLE PROTECTOR DETAIL 10/3

SCALE: 1:25

SCALE : 1:10 — 0mm 100 200 300 400 500 600 700 800 900 1000mm

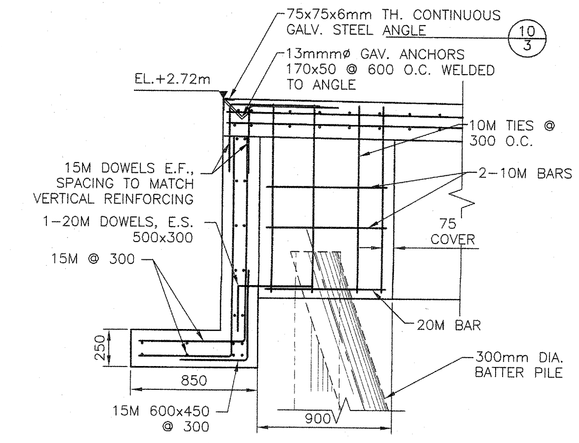

TYPICAL BATTER PILE CAP SECTION 6/3

SCALE: 1:25

SCALE: 1:25 — 0mm 500mm 1000mm 1500mm 2000mm 2500mm

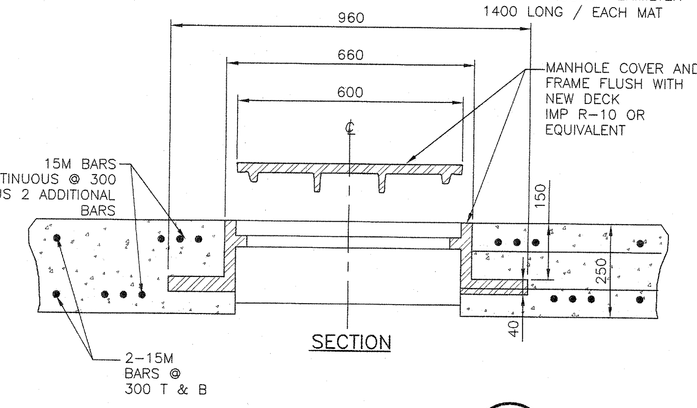

ACCESS MANHOLE DETAIL 9/3

SCALE: 1:25

SCALE : 1:10 — 0mm 100 200 300 400 500 600 700 800 900 1000mm

Public Works and Government Services Canada / Travaux Publics et Services gouvernementaux Canada

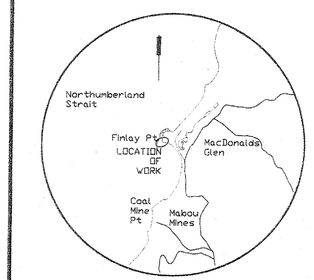

KEY PLAN 1:50,000

CJMac
ENGINEERS & SURVEYORS
65 BEECH HILL ROAD, ANTIGONISH, N.S. B2G 2P9
Tel: (902)863-1220 Fax: (902)863-3225 www.cjmac.ns.ca
C. J. MacLellan and Associates Inc.
Member of the SNC Lavalin Group of Companies

revisions		date
3	ISSUED FOR PWGSC REVIEW	4/13 2015
2	90% REVIEW	3/30 2015
1	90% REVIEW	3/12 2015

project / projet

MARGINAL WHARF RECONSTRUCTION FINLAY POINT INVERNESS COUNTY, NS

drawing / dessin

TYPICAL SECTIONS AND DETAILS

designed BJL / conçu
date
drawn DAM / dessiné
date
approved BJL / approuvé
date
Tender / Soumission
M. Walsh
PWGSC Project Manager / Administrateur de projets TPSGC
project number / no. du projet
R.075963.001
drawing no. / no. du dessin
3 OF 4

PWGSC B1 (2004)