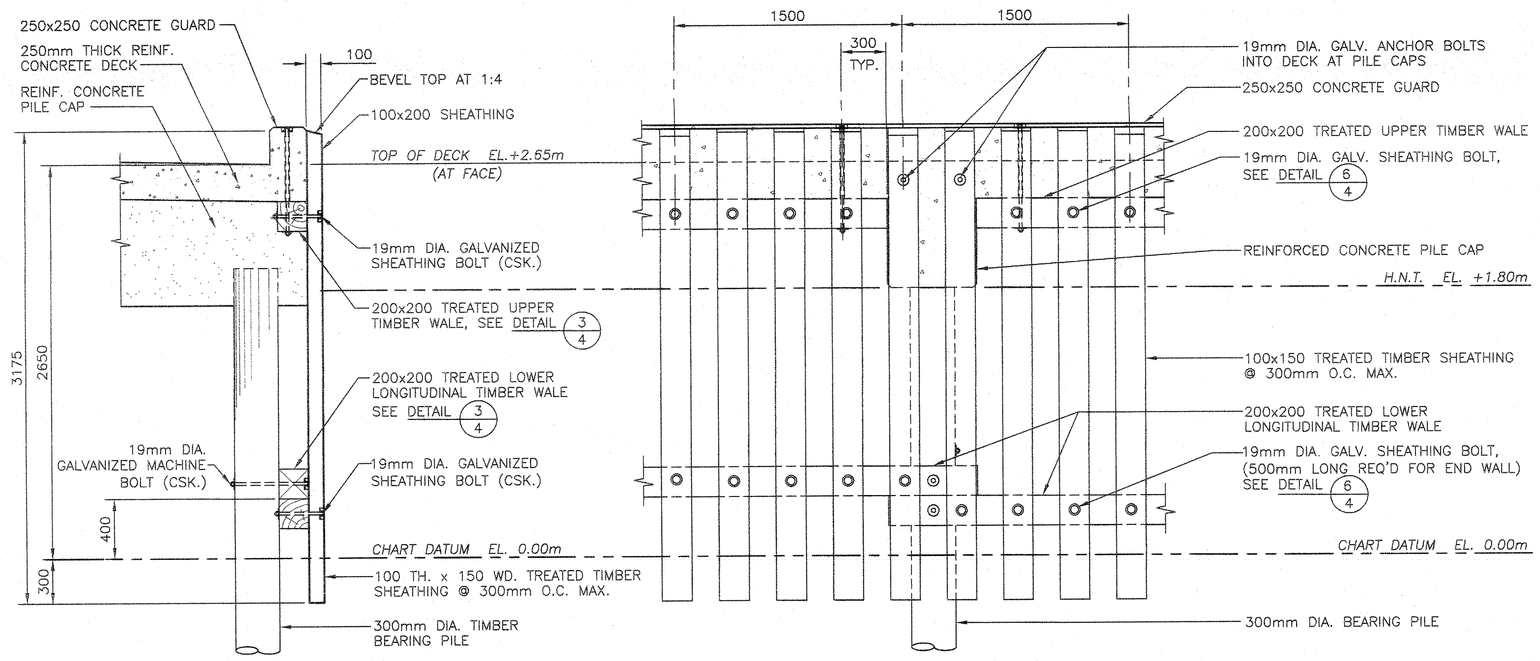

FENDER AND SHEATHING FASTENING DETAIL 1/4

SCALE: 1:25

SCALE: 1:25
0mm 500mm 1000mm 1500mm 2000mm 2500mm

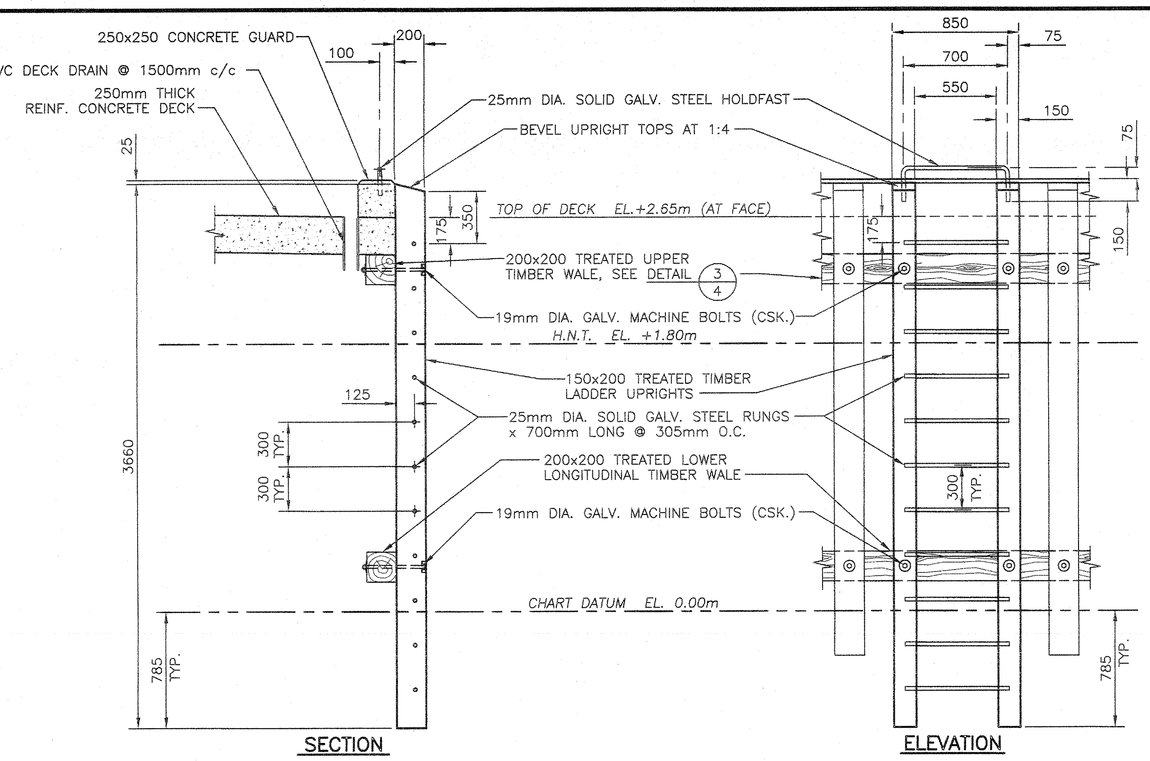

TYPICAL LADDER DETAIL 2/4

SCALE: 1:25

SCALE: 1:25
0mm 500mm 1000mm 1500mm 2000mm 2500mm

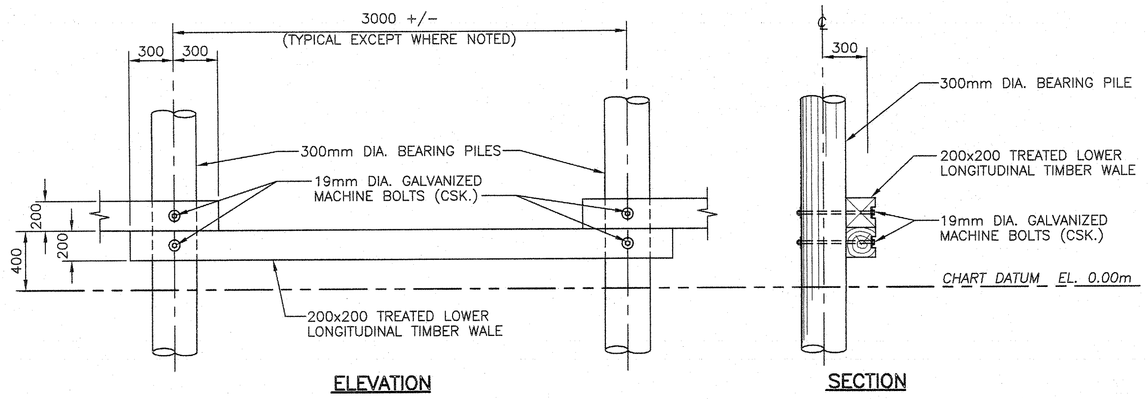

TYPICAL WALE FASTENING DETAIL 3/4

SCALE: 1:25

SCALE: 1:25
0mm 500mm 1000mm 1500mm 2000mm 2500mm

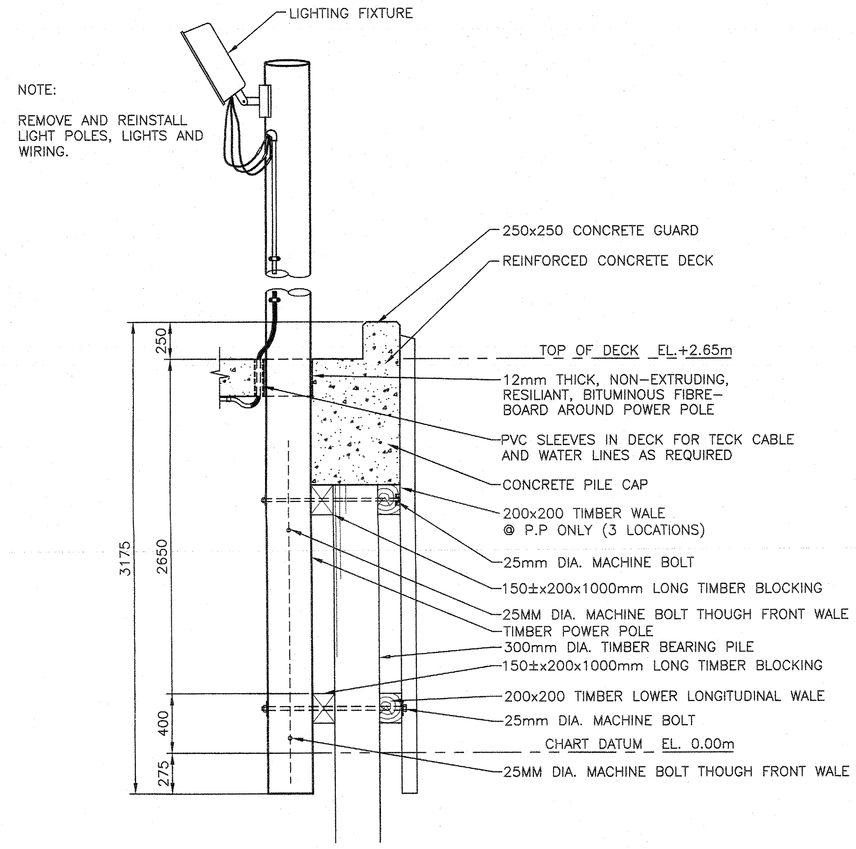

TYPICAL POWER POLE FASTENING DETAIL 5/4

SCALE: 1:25

SCALE: 1:25
0mm 500mm 1000mm 1500mm 2000mm 2500mm

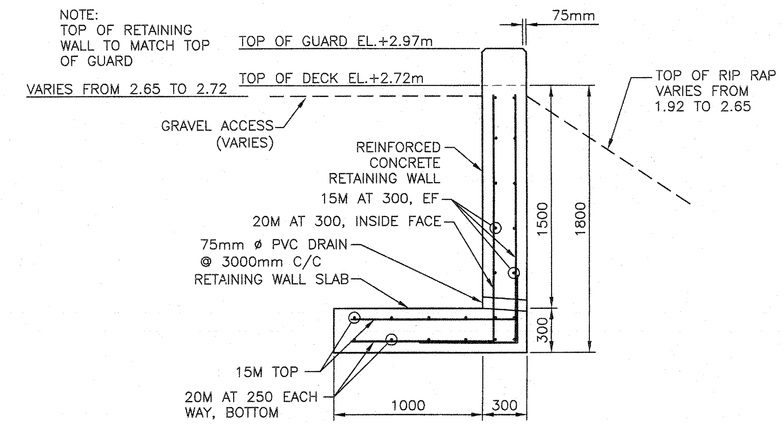

NEW CONCRETE RETAINING WALL DETAIL 7/4

SCALE: 1:25

SCALE: 1:25
0mm 500mm 1000mm 1500mm 2000mm 2500mm

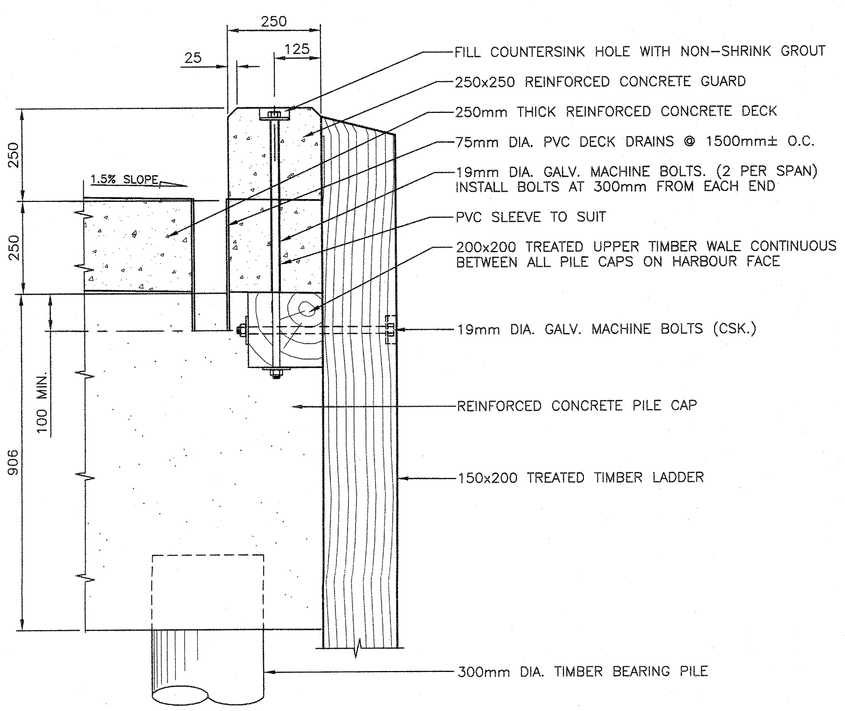

TYPICAL DRAIN AND UPPER TIMBER WALE DETAIL 4/4

SCALE: 1:10

SCALE : 1:10
0mm 100 200 300 400 500 600 700 800 900 1000mm

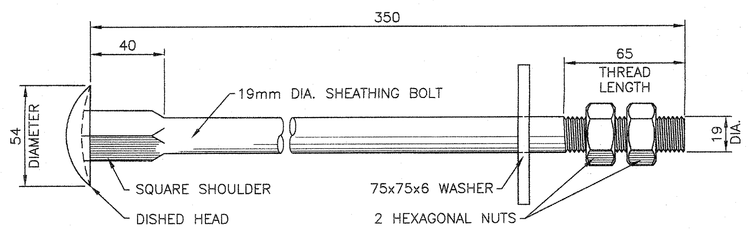

SPECIAL SHEATHING BOLT DETAIL 6/4

SCALE: 1:2

SCALE : 1:2
0mm 50mm 100mm 150mm 200mm 250mm

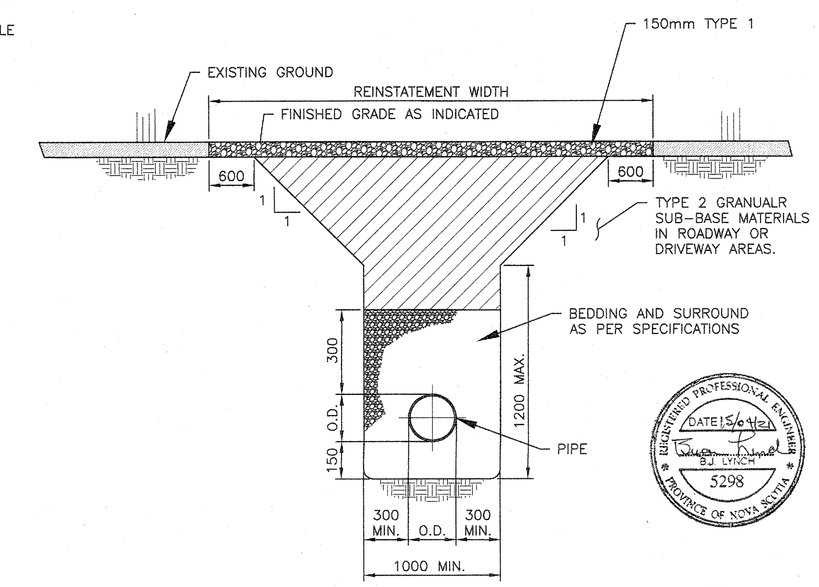

TYPICAL PIPE TRENCH DETAIL 8/4

SCALE: 1:25

SCALE: 1:50
0m 1m 2m 3m 4m 5m

Public Works and Government Services Canada / Travaux Publics et Services gouvernementaux Canada

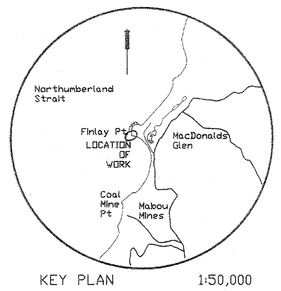

KEY PLAN 1:50,000

CJMac
ENGINEERS & SURVEYORS
65 BEECH HILL ROAD, ANTIGONISH, N.S. B2G 2P9
Tel: (902)863-1220 Fax: (902)863-3225 www.cjmac.ns.ca
C. J. MacLellan and Associates Inc.
Member of the SNC Lavalin Group of Companies

revisions		date
4	ISSUED FOR TENDER	4/21 2015
3	ISSUED FOR PWGSC REVIEW	4/13 2015
2	90% REVIEW	3/30 2015
1	90% REVIEW	3/12 2015

project / projet

MARGINAL WHARF RECONSTRUCTION
FINLAY POINT
INVERNESS COUNTY, NS

drawing / dessin

TYPICAL SECTIONS AND DETAILS

designed / conçu: BJL
date
drawn / dessiné: DAM
date
approved / approuvé: BJL
date
Tender / Soumission
PWGSC Project Manager / Administrateur de projets TPSGC
project number / no. du projet: R.075963.001
drawing no. / no. du dessin: 4 OF 4

REGISTERED PROFESSIONAL ENGINEER B.J. LYNCH 5298 PROVINCE OF NOVA SCOTIA DATE 15/04/15