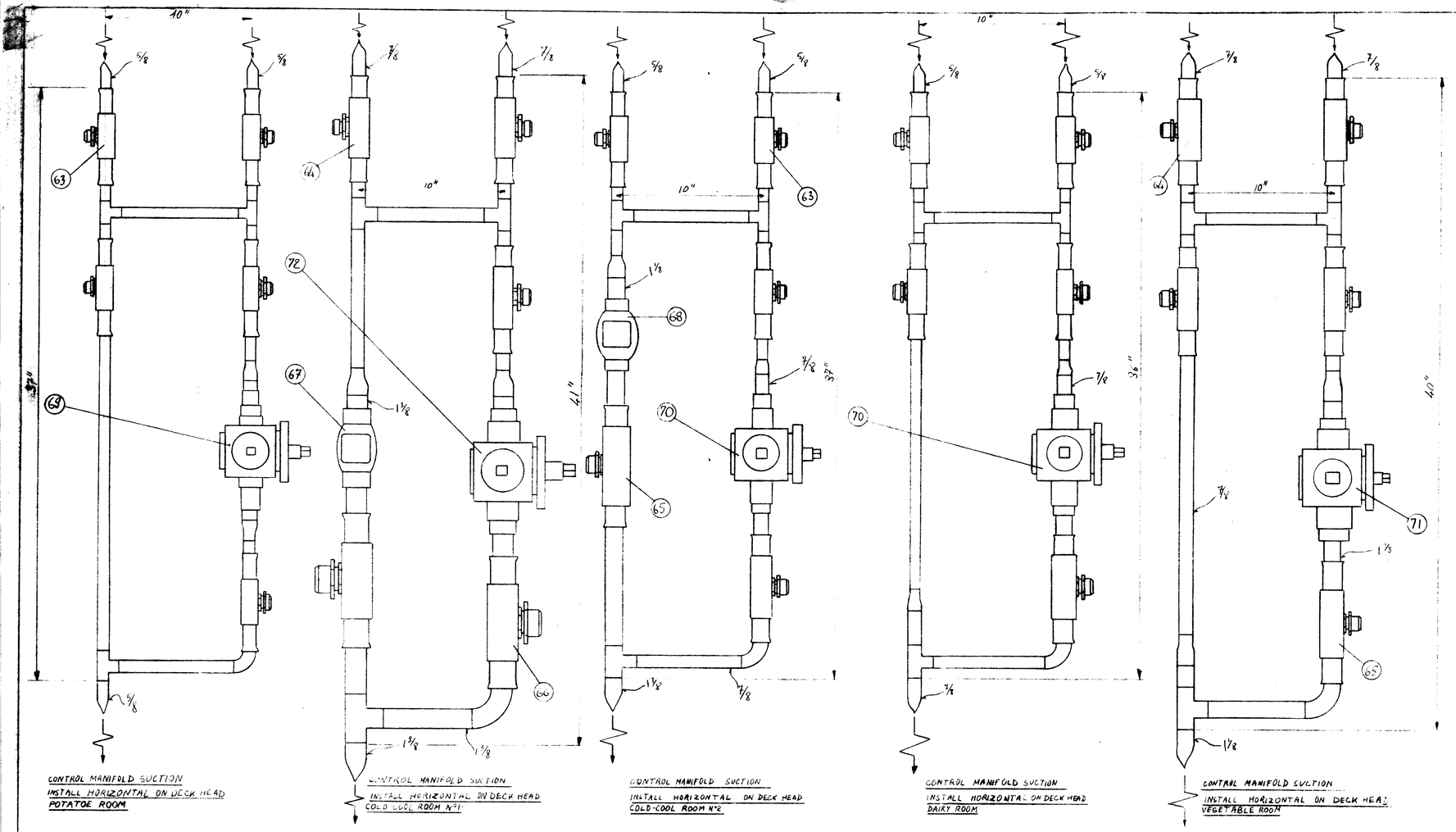

CONTROL MANIFOLD SUCTION
INSTALL HORIZONTAL ON DECK HEAD
POTATOE ROOM

CONTROL MANIFOLD SUCTION
INSTALL HORIZONTAL ON DECK HEAD
COLD COOL ROOM N°1

CONTROL MANIFOLD SUCTION
INSTALL HORIZONTAL ON DECK HEAD
COLD-COOL ROOM N°2

CONTROL MANIFOLD SUCTION
INSTALL HORIZONTAL ON DECK HEAD
DAIRY ROOM

CONTROL MANIFOLD SUCTION
INSTALL HORIZONTAL ON DECK HEAD
VEGETABLE ROOM

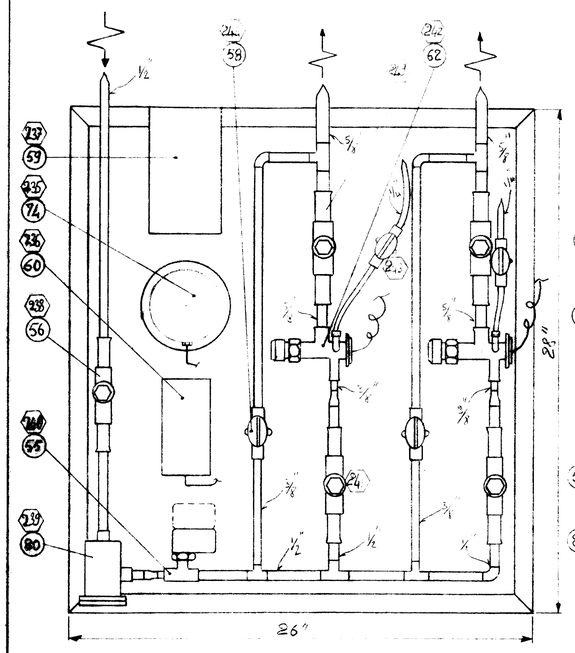

COLD COOL ROOM N°1 & N°2
LIQUID LINE CONTROL PANEL QTY: 2

CARGO ROOM
LIQUID LINE CONTROL PANEL QTY: 2

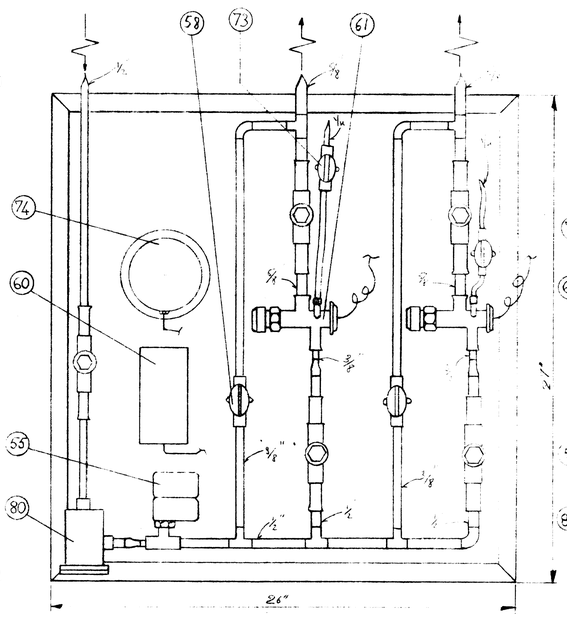

DAIRY & POTATOE ROOM
LIQUID LINE CONTROL PANEL QTY 2

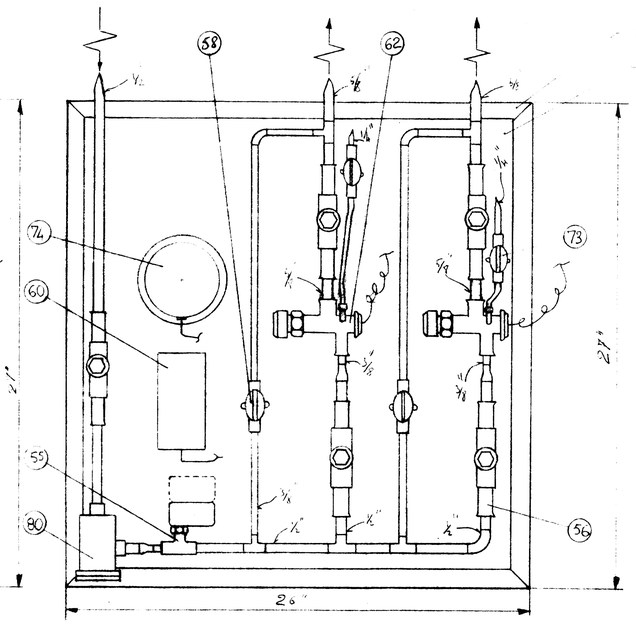

VEGETABLE ROOM
LIQUID LINE CONTROL PANEL QTY: 1

NOTES: CARGO ROOM

ITEM	QTY	DESCRIPTION	REMARKS
249	4	BALL VALVES 5/8" ODF	
244	4	HAND EXP. VALVES 3/8" ODF	
243	4	HAND VALVE 1/4" x 1/4" FL	
242	4	T.X. VALVES 3/8 - 5/8"	
241	4	BALL VALVES 1/2" ODF	
240	2	SOLENOID	
239	2	STRAINER	
238	2	INLET HAND VALVES	
237	2	DEFROST TIME CLOCK	
236	2	ROOM THERMOSTAT 10' CAP	
235	2	DIAL THERMOMETER	

ITEM	QTY	DESCRIPTION	REMARKS
73	10	HAND VALVE 1/4	6251
66	2	BALL VALVE 1 3/8 ODF	V34 207
65	2	BALL VALVE 1 1/8 ODF	V34 206
66	7	" " 7/8 ODF	V34 204
69	12	" " 5/8 ODF	V34 202
56	15	BALL VALVE 1/2 ODF	V34 201
80	10	STRAINER W. FLANGE 1/2 ODF	T66 A
74	5	DIAL THERMOMETER 10' CAP 4"	BF 80
72	1	EVAP PRESS REG 1 3/8	A7-1
71	1	1 1/8	A7-1
70	2	EVAP PRESS REG 7/8	A7-0
69	1	EVAP PRESS REG 5/8	A7-1
68	1	CHECK VALVE 1 1/8	205
67	1	CHECK VALVE 1 3/8	205
62	6	T'SAT EXP. VALVE 3/8 / 5/8	SFE-1
	-	EXT. EQUAL	
61	4	T'SAT. EXP. VALVE 3/8 / 5/8	SFE-1/2
	-	EXT. EQUAL POT & DAIRY	
60	5	ROOM THERMOSTAT 10 FT CAP	1609-103
59	2	DEFROST TIME CLOCK	8145-20
	-	TIME INIT. TEMP. TERM	
58	10	HAND EXP. VALVES	6293
55	5	LIQUID SOL. VALVE	MBG 51

NO	DATE	NO	DESCRIPTION	DATE	IN
3	A '66 7660	0	INITIAL	APRIL 7 76	PC

ISSUES REVISIONS

ISSUED 6 1976 BURRARD DRY DOCK CO. LTD.

GALT EQUIPMENT LTD.
47 MARIE VICTORIN BLVD.
CANDIAC, P.Q.

CONTROL PANELS
DOMESTIC & CARGO

CUSTOMER BURRARD DRYDOCK CO. LTD
HULL 221 222

SCALE 1/4" → 1"
CONTRACT C 3288
D'N PC C'D CD
DATE 8 '76
DWG 3288-15A