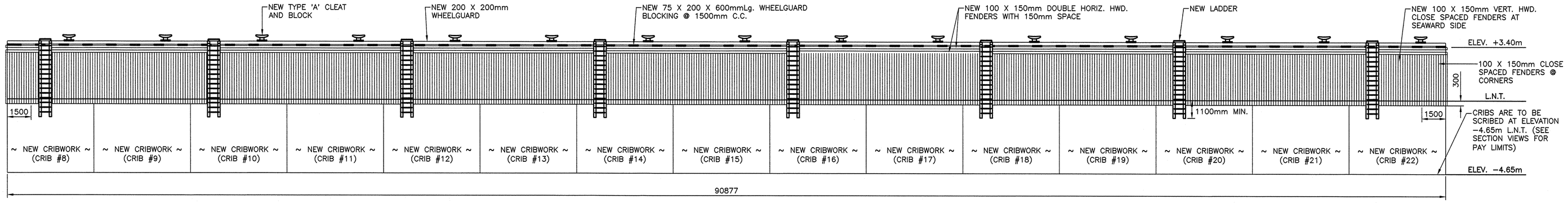

ELEVATION 1 (4 | 5)
SCALE : 1:125
0m 1 2 3 4 5 6 7 8 9 10m

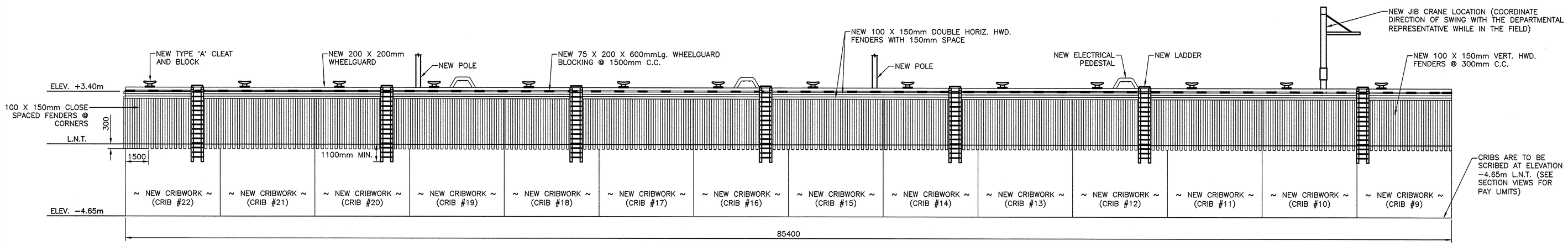

ELEVATION 2 (4 | 5)
SCALE : 1:125
0m 1 2 3 4 5 6 7 8 9 10m

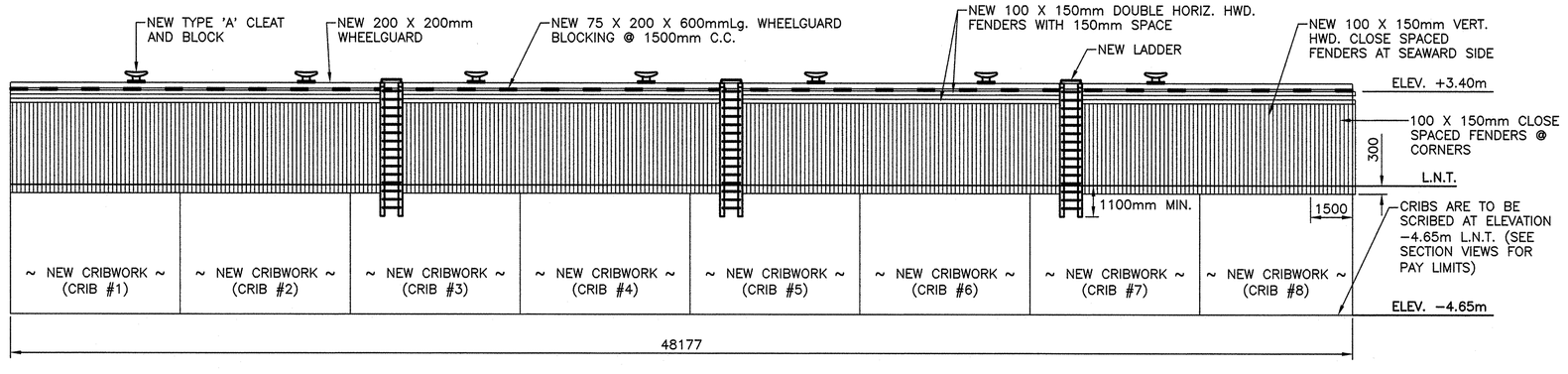

ELEVATION 3 (4 | 5)
SCALE : 1:125
0m 1 2 3 4 5 6 7 8 9 10m

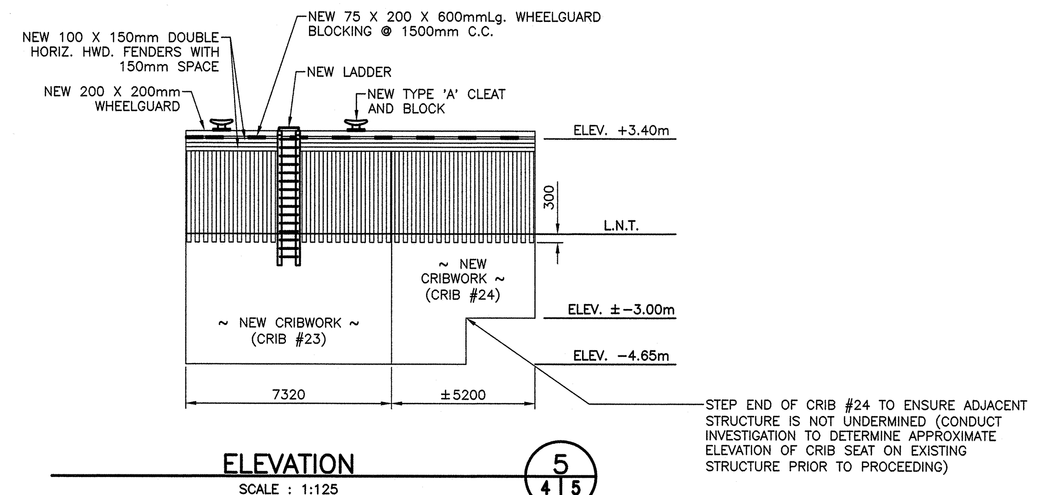

ELEVATION 5 (4 | 5)
SCALE : 1:125
0m 1 2 3 4 5 6 7 8 9 10m

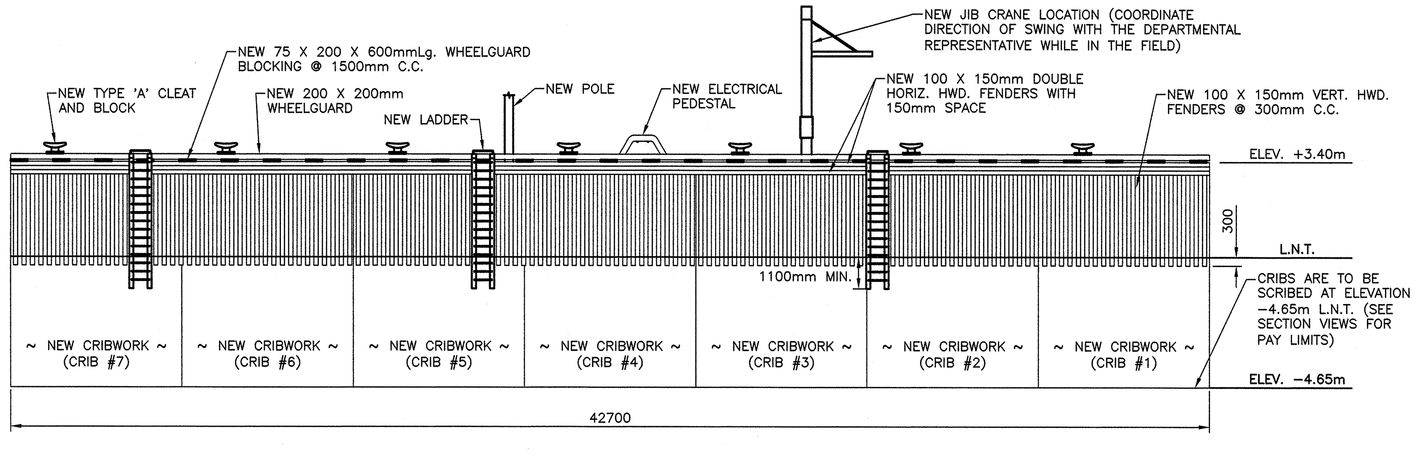

ELEVATION 4 (4 | 5)
SCALE : 1:125
0m 1 2 3 4 5 6 7 8 9 10m

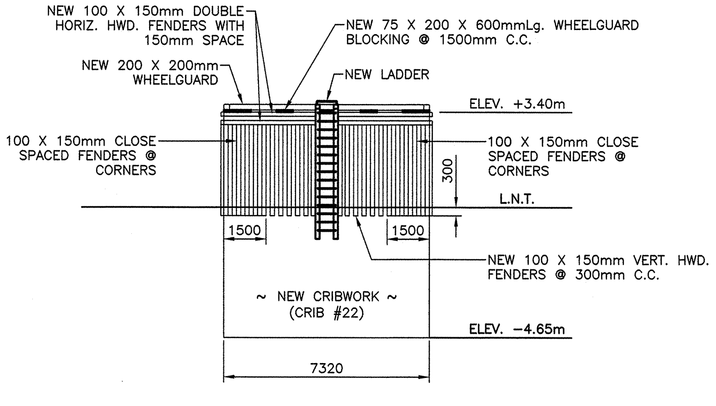

ELEVATION 6 (4 | 5)
SCALE : 1:125
0m 1 2 3 4 5 6 7 8 9 10m

Public Works and Government Services Canada / Travaux Publics et Services gouvernementaux Canada

PROVINCE OF NEWFOUNDLAND
PERMIT HOLDER
This Permit Allows
AFN ENGINEERING INC.
To practice Professional Engineering in Newfoundland and Labrador.
Permit No. as issued by APEGNL F0292 which is valid for the year 2015.

STAMP
REGISTERED PROFESSIONAL ENGINEER
NEIL C. HUNT
SIGNATURE
6/5/15
DATE
NEWFOUNDLAND & LABRADOR

revisions		date
B	ISSUED FOR TENDER	6/5/15
A	ISSUED FOR 33% REVIEW	28/12/14

project / projet
HARBOUR DEVELOPMENT
JOE BATTS ARM, NL

drawing / dessin
ELEVATIONS

designed / conçu: N.H.
date: JUNE 5, 2015
drawn / dessiné: P.H.
date: JUNE 5, 2015
approved / approuvé
date
Tender / Soumission
PWGSC Project Manager / Administrateur de projets TPSGC: 16 Jun 2015
project number / no. du projet: R.077427.001
drawing no. / no. du dessin: C5 OF 8