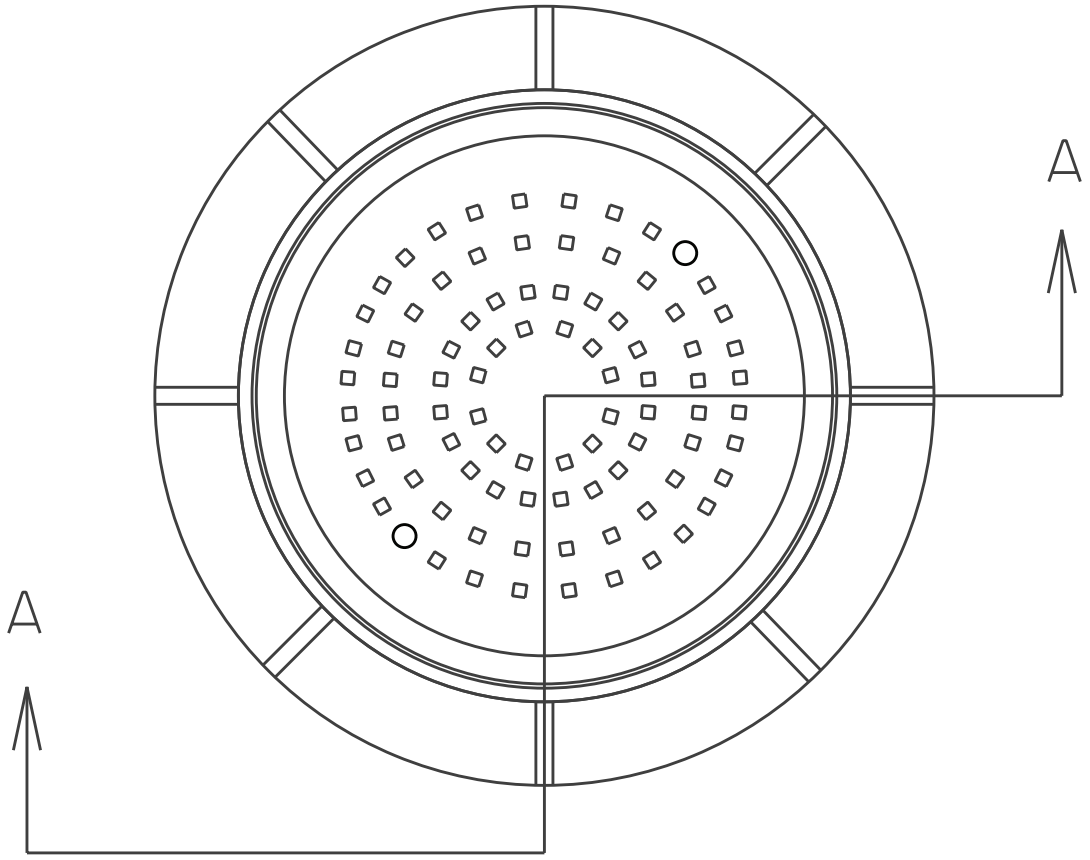

TOP VIEW

MATERIAL
CLASS 30 CAST IRON

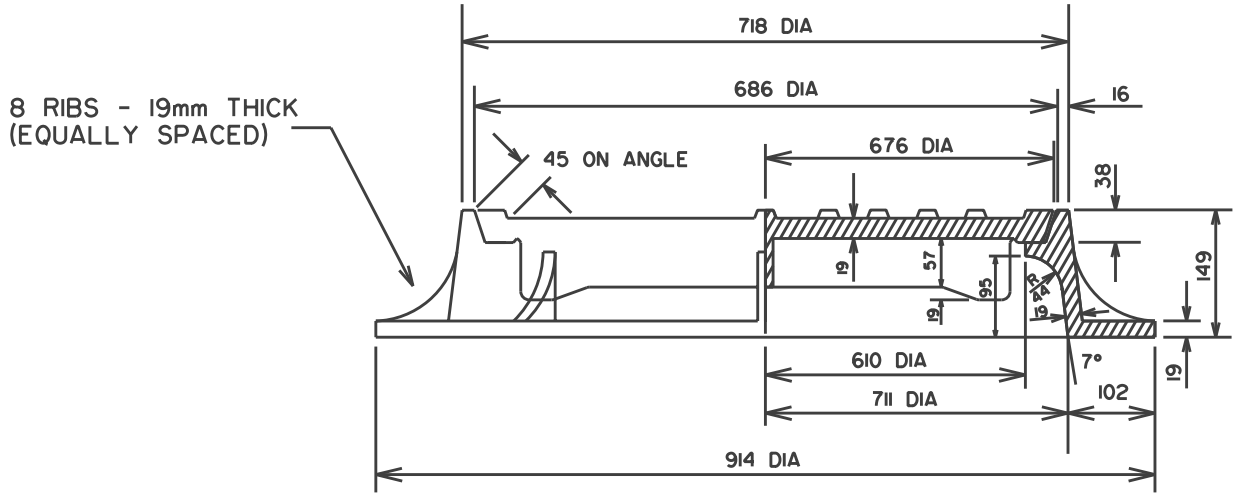

SECTION A-A

REVISED	CITY OF Lethbridge INFRASTRUCTURE SERVICES	DRAWN P.R.A.
		CHECKED
		APPROVED
		SCALE N.T.S.
	STANDARD MANHOLE FRAME AND COVER	DATE 97/03/11
		DWG NO S-10