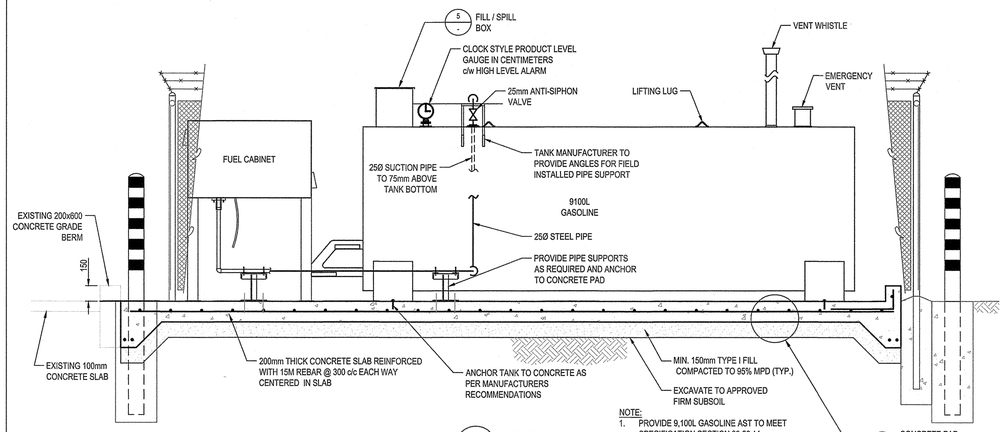

NOTE:
1. PROVIDE 9,100L GASOLINE AST TO MEET SPECIFICATION SECTION 33 56 14.
2. ALTERNATE TANK SIZES AND CONFIGURATIONS MAY REQUIRE CHANGE TO THE SITE LAYOUT AND CONCRETE WORK. THE CONTRACTOR SHALL PROVIDE SHOP DRAWINGS, INCLUDING SITE REVISIONS TO SUIT THE PROPOSED TANK.

A SECTION
1:25

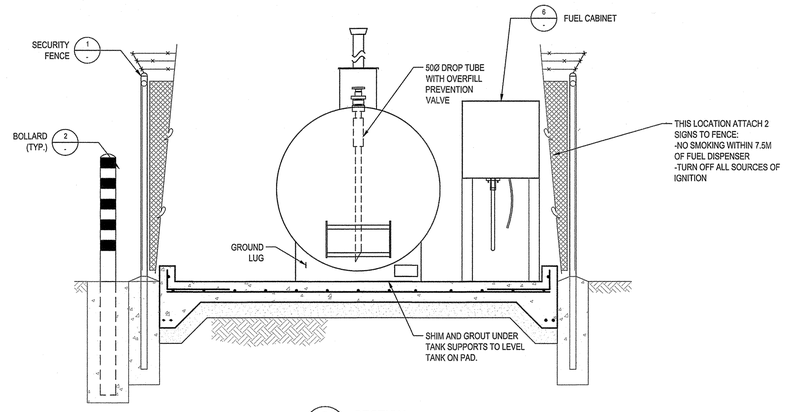

B SECTION
1:25

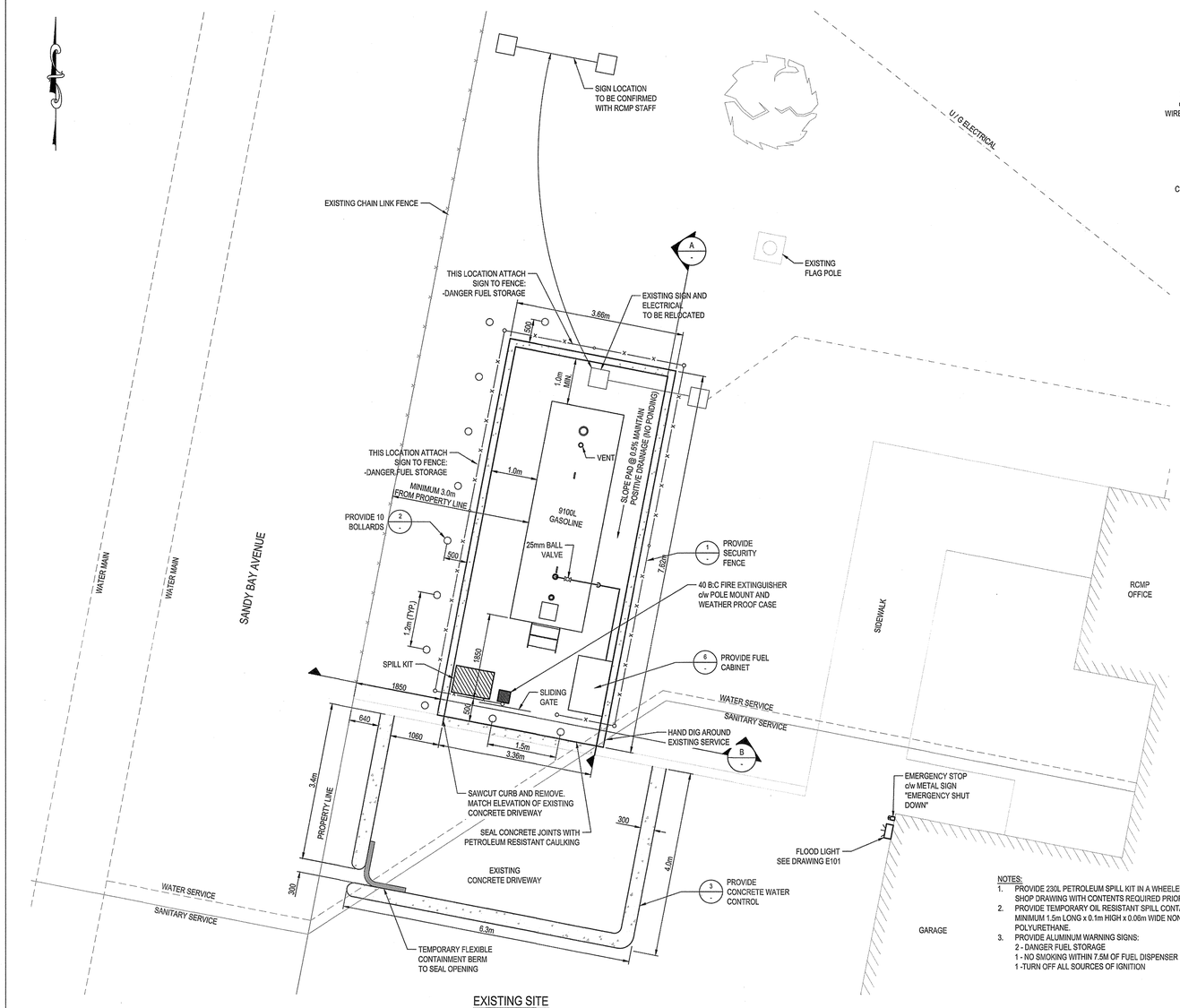

EXISTING SITE
1:50

NOTES:
1. PROVIDE 230L PETROLEUM SPILL KIT IN A WHEELED CONTAINER. SHOP DRAWING WITH CONTENTS REQUIRED PRIOR TO PURCHASE.
2. PROVIDE TEMPORARY OIL RESISTANT SPILL CONTAINMENT BERM MINIMUM 1.5m LONG x 0.1m HIGH x 0.06m WIDE NON-ABSORBING POLYURETHANE.
3. PROVIDE ALUMINUM WARNING SIGNS:
   2 - DANGER FUEL STORAGE
   1 - NO SMOKING WITHIN 7.5M OF FUEL DISPENSER
   1 -TURN OFF ALL SOURCES OF IGNITION

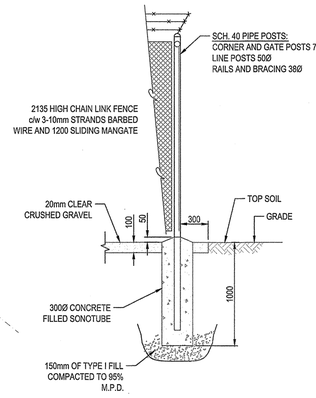

1 SECURITY FENCE DETAIL (TYP.)
1:25

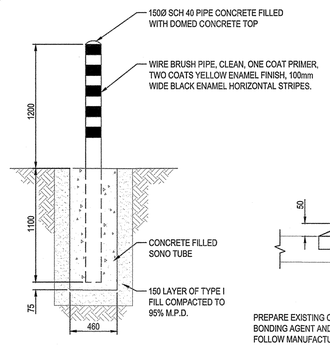

2 BOLLARD DETAIL
1:25

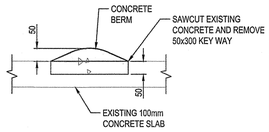

PREPARE EXISTING CONCRETE WITH EPOXY-CEMENT BASED BONDING AGENT AND ANTI-CORROSIVE REBAR COATING. FOLLOW MANUFACTURERS INSTALLATION DETAILS

3 WATER CONTROL DETAIL
1:10

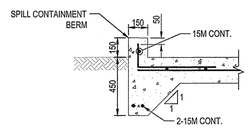

4 CONCRETE PAD DETAIL
1:20

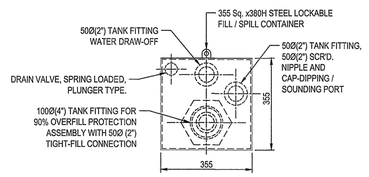

5 FILL / SPILL BOX DETAIL
1:10

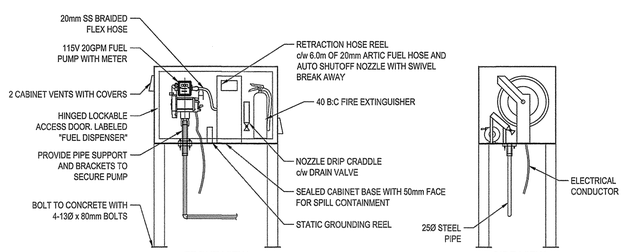

FRONT VIEW

SIDE VIEW

8GA ALUMINUM FUEL CABINET
750H x 1200W x 750D (APPROXIMATE)
BASE OF CABINET MINIMUM 1000ABOVE GRADE
TOP OF CABINET MAXIMUM 1750 ABOVE GRADE
CONTRACTOR TO PROVIDE SHOP DRAWING FOR CABINET AND COMPONENTS.

6 FUEL CABINET DETAIL
1:25

Public Works and Government Services Canada / Travaux publics et Services gouvernementaux Canada

REAL PROPERTY SERVICES
Western Region
SERVICES IMMOBILIERS
Région de l'Ouest

WSP
SUITE 400-401 GARBALLY ROAD
VICTORIA (BRITISH COLUMBIA) CANADA V8T 5M3
TEL.: 250-384-5510 | FAX: 250-386-2844 | WWW.WSPGROUP.COM
141-24873-00

LEGEND

	CHECK VALVE
F.L.	FUSIBLE LINK VALVE
	BALL VALVE
S	SOLENOID VALVE
	REDUCING COUPLING
	HAND PUMP
	PUMP
	FILTER SEPARATOR
Re:	REMOVE
CIE	CONNECT TO EXISTING
FOS	FUEL OIL SUPPLY
FOR	FUEL OIL RETURN
c/w	COMPLETE WITH
SS	STAINLESS STEEL

Association of Professional Engineers & Geoscientists of Saskatchewan
CERTIFICATE OF AUTHORIZATION
WSP INC.
Number C0868
Permission to Consult held by:

Discipline	Sk. Reg. No.	Signature
MECHANICAL	13606	

PROFESSIONAL ENGINEER
R.E. McCONDUIT
MEMBER 13606
15 02 07
YR. MN. DAY
SASKATCHEWAN

Revision/ Revision	Description/Description	Date/Date
5		
4		
3		
2	ISSUED FOR TENDER	2015/02/27
1	ISSUED FOR 99% CLIENT REVIEW	2015/01/30
0	ISSUED FOR 50% CLIENT REVIEW	2014/12/22

Client/client
RCMP
PWGSC

Project title/Titre du projet
RCMP SANDY BAY, SK
FUEL STORAGE AND DISPENSING SYSTEM

Consultant Signature Box Only

Designed by/Concept par
DMH

Drawn by/Dessine par
SG

PWGSC Project Manager/Administrateur de Projets TPSGC
Laura Barz

PWGSC, Regional Manager, Architectural and Engineering Services/ Gestionnaire régionale, Services d'architectural et de génie, TPSGC

Drawing title/Titre du dessin
SITE PLAN,
TANK AND PIPING DETAILS

Project No./No. du projet	Sheet/Feuille	Revision no./ La Révision no.
R.073302.001	M101 2 OF 3	2

PWGSC – B1 – 1000X707

0 10 20 30 40 50 60 70 80 90 100mm

DMSXXXXXX