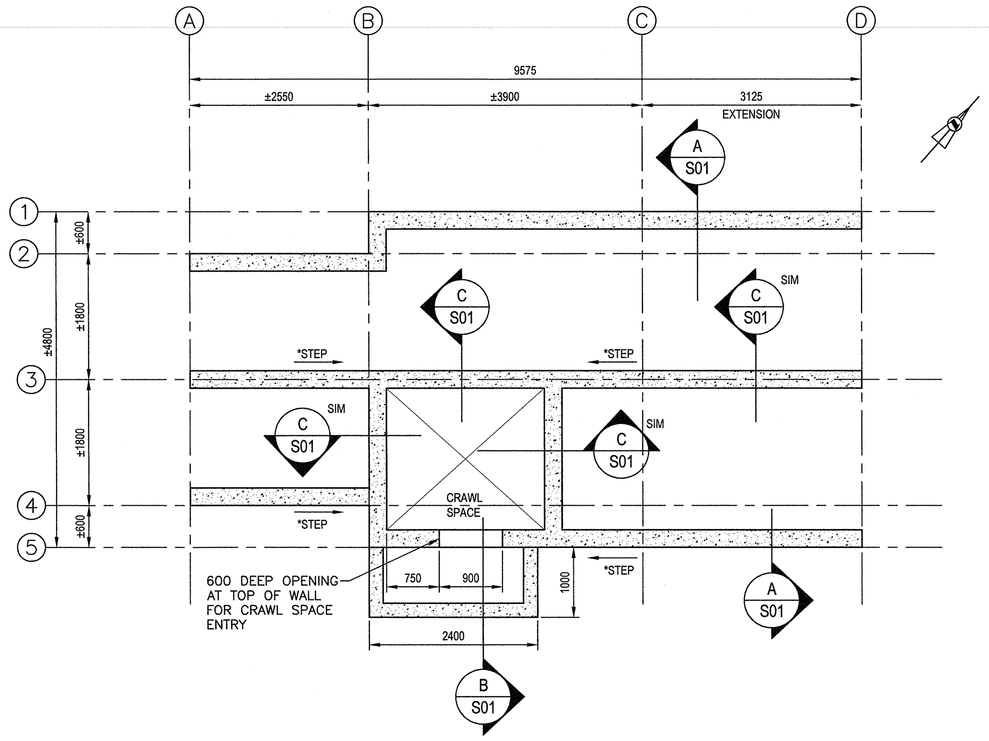


## FOUNDATION PLAN

SCALE: 1:50

0m 1m 2m 3m 4m 5m

NOTES:

1. ALL DIMENSIONS ANNOTATED WITH A "±" SHALL BE CONFIRMED ON SITE BY CONTRACTOR PRIOR TO CONSTRUCTION.
2. *STEP: STEP BOTTOM OF WALL TO MAINTAIN FROST COVER AS REQUIRED.

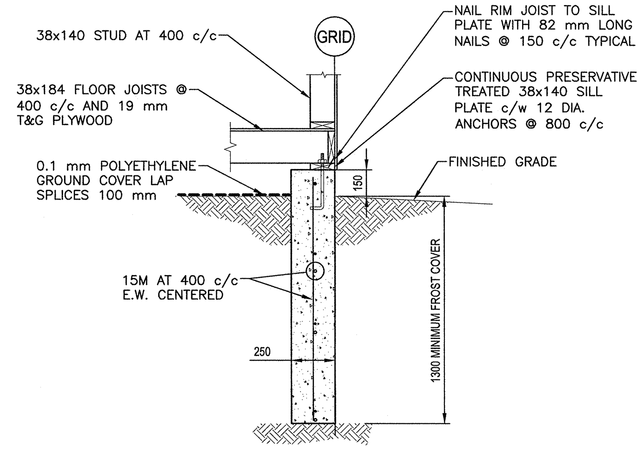


A S01 SECTION

SCALE : 1:20

0mm 500mm 1000mm 1500mm 2000mm 2500mm

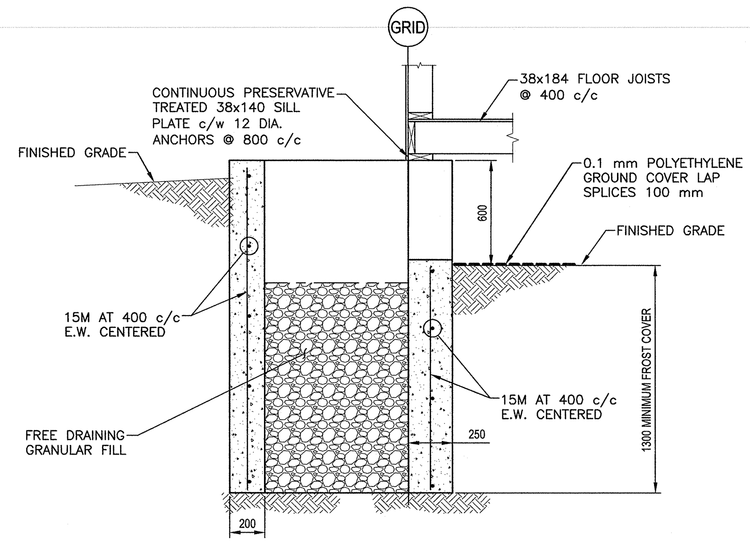


B S01 SECTION

SCALE : 1:20

0mm 500mm 1000mm 1500mm 2000mm 2500mm

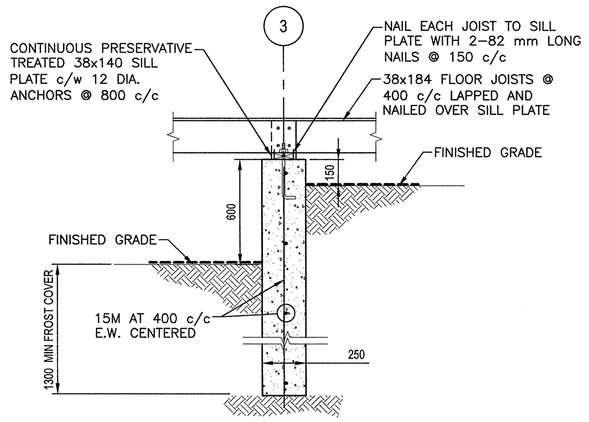


C S01 SECTION

SCALE : 1:20

0mm 500mm 1000mm 1500mm 2000mm 2500mm

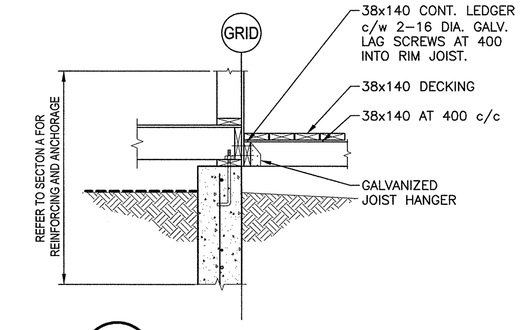


D S01 SECTION

SCALE : 1:20

0mm 500mm 1000mm 1500mm 2000mm 2500mm

GENERAL NOTES:

1. ALL WORK AND MATERIALS TO CONFORM TO THE REQUIREMENTS OF THE NATIONAL BUILDING CODE OF CANADA, 2010 EDITION. ALL LUMBER TO BE MINIMUM SPF NO.2.
2. ALL WORK TO BE CARRIED OUT IN ACCORDANCE WITH THE NEWFOUNDLAND AND LABRADOR OCCUPATIONAL HEALTH AND SAFETY ACT.
3. USE OF THESE DRAWINGS IS LIMITED TO THAT IDENTIFIED IN REVISION COLUMN. DO NOT CONSTRUCT FROM DRAWINGS UNLESS MARKED "ISSUED FOR CONSTRUCTION" IN REVISION COLUMN.
4. SECTION MARK (A / S01) MEANS SECTION 'A' ON DRAWING 'S01'.
5. DO NOT SCALE DRAWINGS. FOLLOW FIGURED DIMENSIONS ONLY.
6. LINEAR DIMENSIONS SHOWN ON DRAWINGS ARE IN MILLIMETERS.
7. VERIFY DIMENSIONS, ELEVATIONS AND ALIGNMENT OF NEW AND EXISTING WORK AND SUBMIT ANY INCONSISTENCIES AND ALTERATIONS TO THE WORK TO DEPARTMENT REPRESENTATIVE FOR REVIEW PRIOR TO COMMENCING CONSTRUCTION.
8. COORDINATE WORK ON THESE DRAWINGS WITH ARCHITECTURAL, CIVIL AND ELECTRICAL DRAWINGS AND REPORT ANY INCONSISTENCIES TO DEPARTMENT REPRESENTATIVE PRIOR TO PROCEEDING WITH THE WORK.
9. CARRYING OUT OF WORK PRIOR TO REVIEW AND ACCEPTANCE OF DETAILED SHOP DRAWINGS BY DEPARTMENT REPRESENTATIVE TO BE AT CONTRACTOR'S RISK.
10. CONTRACTOR TO ASSUME FULL RESPONSIBILITY OF STRUCTURES DURING ERECTION. CONTRACTOR TO PROVIDE ADEQUATE TEMPORARY BRACING SYSTEM TO MAINTAIN STRUCTURAL SAFETY, PLUMBNESS AND ALIGNMENT UNTIL COMPLETION OF WORK.
11. DO NOT CUT OR DRILL ANY OPENINGS IN STRUCTURAL MEMBERS WITHOUT WRITTEN CONSENT FROM DEPARTMENT REPRESENTATIVE.
12. CONTRACTOR TO REINSTATE AREAS AFFECTED BY NEW CONSTRUCTION TO THEIR ORIGINAL CONDITION TO SATISFACTION OF DEPARTMENT REPRESENTATIVE.
13. FOUNDATION BEARING SURFACE SHALL BE REVIEWED BY SNC LAVALIN INC. GEOTECHNICAL ENGINEER PRIOR TO PLACING CONCRETE FOR FOUNDATIONS.
14. BUILDING FOUNDATIONS TO BE FOUNDED ON ENGINEERED FILL OR UNDISTURBED SOIL WITH THE FOLLOWING BEARING CAPACITY;
    SLS: 150 KPA
    ULS: 225 KPA
6. GEOTECHNICAL PARAMETERS
    a. DEPTH OF FROST PENETRATION: 1.3M
    b. ALLOWABLE SETTLEMENT UNDER SLS = 25 mm

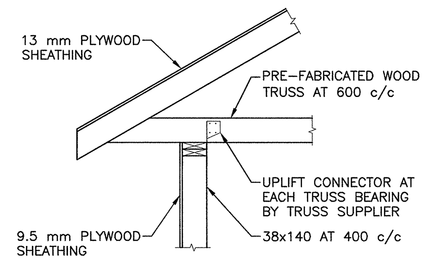


E S01 SECTION

SCALE : 1:20

0mm 500mm 1000mm 1500mm 2000mm 2500mm

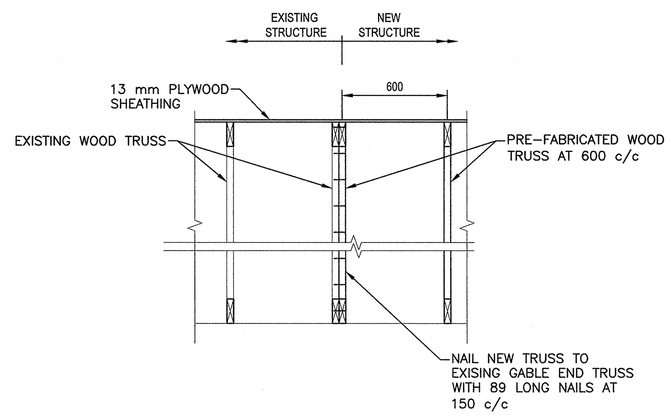


F S01 SECTION

SCALE : 1:20

0mm 500mm 1000mm 1500mm 2000mm 2500mm

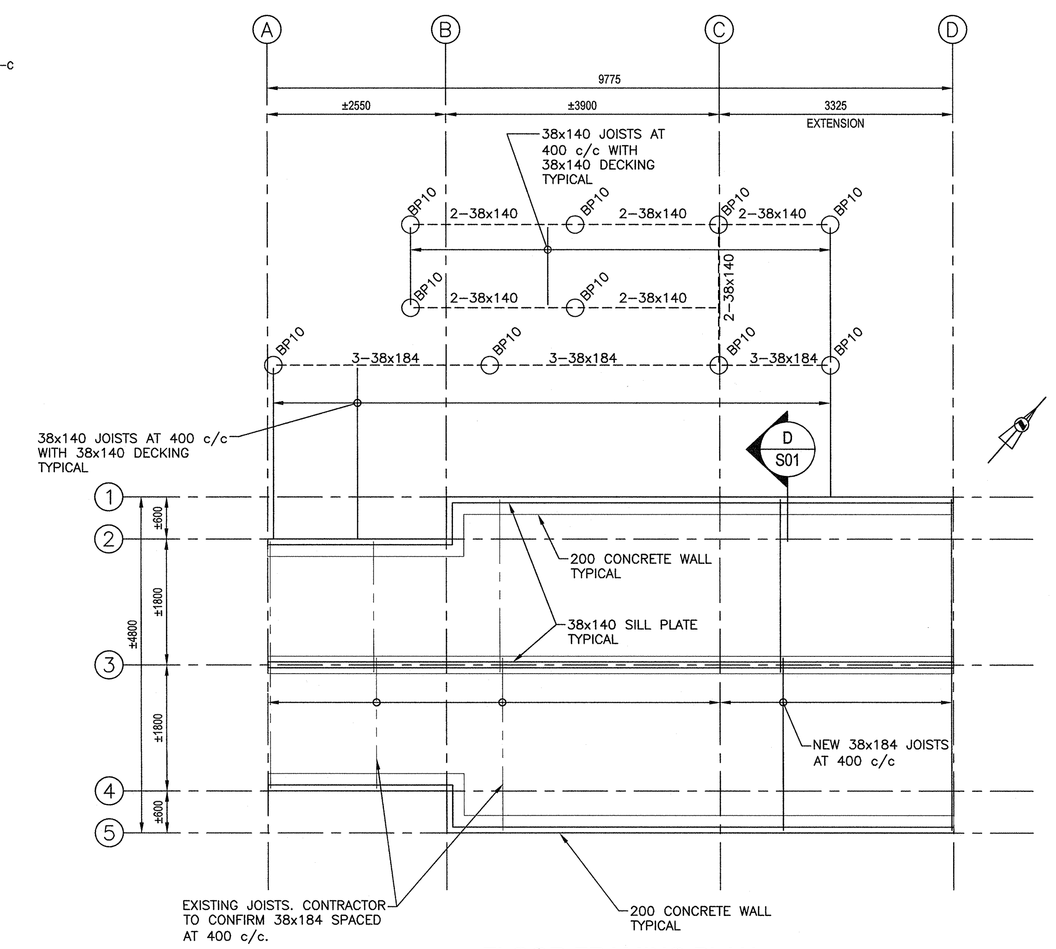


## FLOOR FRAMING PLAN

SCALE: 1:50

0m 1m 2m 3m 4m 5m

NOTES:

ALL DIMENSIONS ANNOTATED WITH A "±" SHALL BE CONFIRMED ON SITE BY CONTRACTOR PRIOR TO CONSTRUCTION.

ALL DECK LUMBER TO BE PRESERVATIVE TREATED SPF NO.1/NO.2 GRADE.

BP10: 200 DIA. CONCRETE PILASTER c/w 600 DIA. FOOTING. PROVIDE 1300 MINIMUM FROST COVER TO U/S OF FOOTING TYPICAL. PROVIDE MINIMUM 12 GAUGE GALVANIZED ADJUSTABLE FRAMING SADDLE CAST INTO TOP OF PILASTER TO RECEIVE TIMBER DECK FRAMING MEMBERS. FILL ALL NAIL HOLES IN SADDLE AS PER MANUFACTURERS DIRECTIONS.

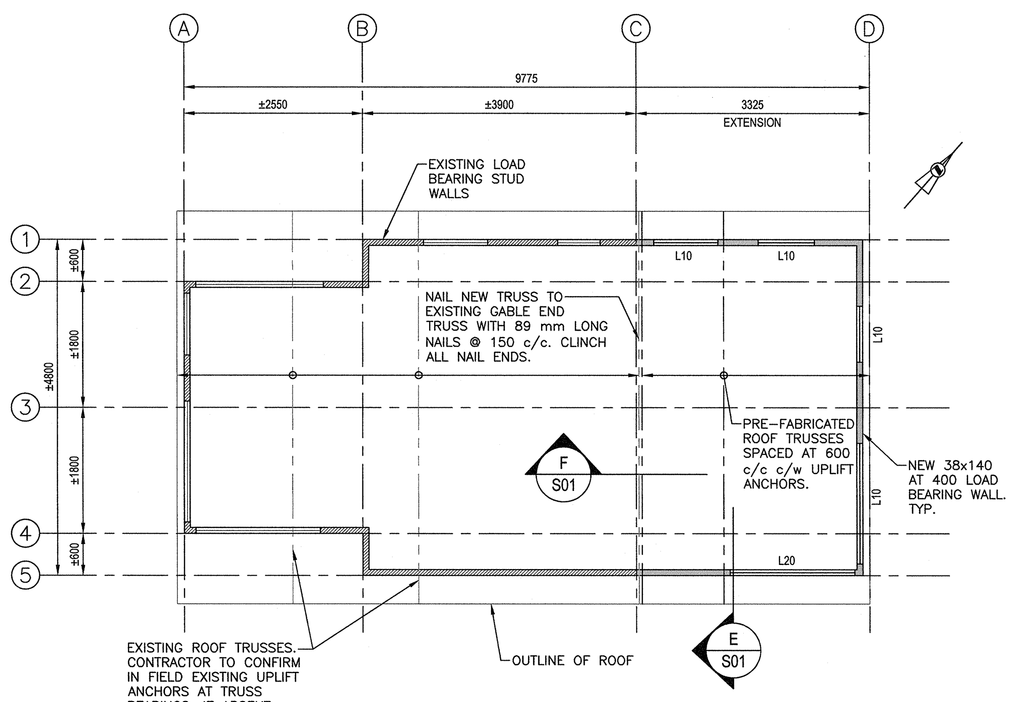


## ROOF FRAMING PLAN

SCALE: 1:50

0m 1m 2m 3m 4m 5m

NOTES:

ALL DIMENSIONS ANNOTATED WITH A "±" SHALL BE CONFIRMED ON SITE BY CONTRACTOR PRIOR TO CONSTRUCTION

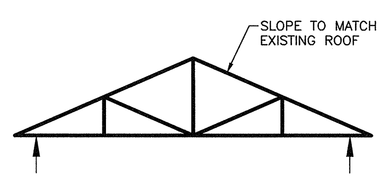


## ROOF TRUSS SCHEMATIC

N.T.S.

LINTLE SCHEDULE

| TYPE | SIZE | JACK STUD | FULL STUD |
|---|---|---|---|
| L10 | 2-38x184 | 1-38x140 | 1-38x140 |
| L20 | 3-38x184 | 1-38x140 | 2-38x140 |

Public Works and Government Services Canada / Travaux Publics et Services gouvernementaux Canada

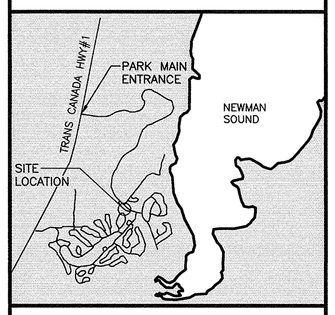


SNC·LAVALIN

SNC·LAVALIN Inc.
Halifax, Nova Scotia, Canada
Member of the SNC·LAVALIN Group

PROVINCE OF NEWFOUNDLAND
PERMIT HOLDER
CLASS "A"
This Permit Allows
SNC–LAVALIN Inc.
To practice Professional Engineering in Newfoundland and Labrador.
Permit No. as issued by PEGNL ND458 which is valid for the year 2015.

REGISTERED PROFESSIONAL ENGINEER
NORMAND D. J. LANDRY
SIGNATURE
31 March 2015
NEWFOUNDLAND & LABRADOR

| revisions | | date |
|---|---|---|
| C01 | ISSUED FOR TENDER | MAR 31 2015 |

project / projet

NEWMAN SOUND REGISTRATION AREA REDESIGN TERRA NOVA NATIONAL PARK, NL

drawing / dessin

ADMINISTRATION BUILDING RENOVATIONS STRUCTURAL PLANS AND GENERAL NOTES

designed / conçu: JOSH ROSE
date: MARCH 10, 2014
drawn / dessiné: JASON R.MELANSON
date: MARCH 10, 2014
approved / approuvé: NORM LANDRY
date: MARCH 10, 2014
Tender / Soumission
PWGSC Project Manager / Administrateur de projets TPSGC
project number / no. du projet: R.065741.001
drawing no. / no. du dessin: S01

617732-D-ST-DWG-0007-01

PWGSC B1 (2004)

E-DRM/GDD-E: # E0225-489732