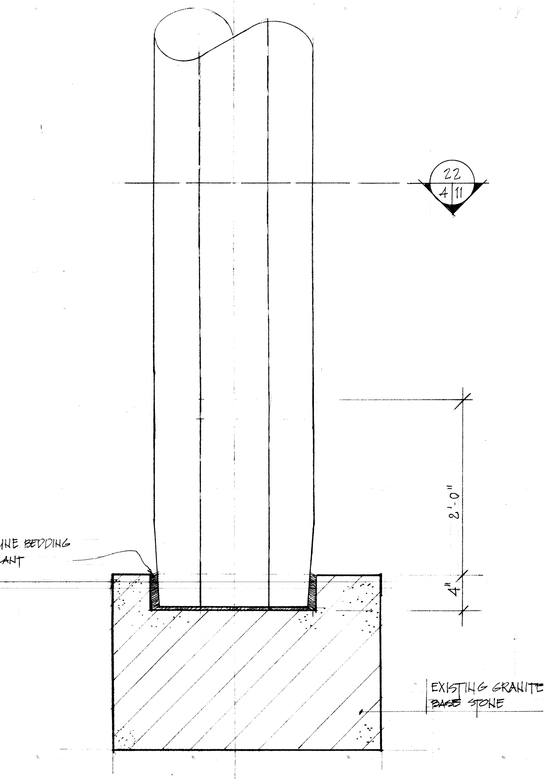

23 | 11 | 11 SECTION A
SCALE 1 1/2" = 1'-0"

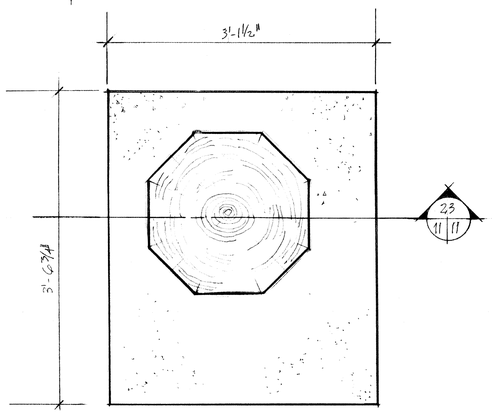

22 | 4 | 11 PLAN VIEW
SCALE 1 1/2" = 1'-0"

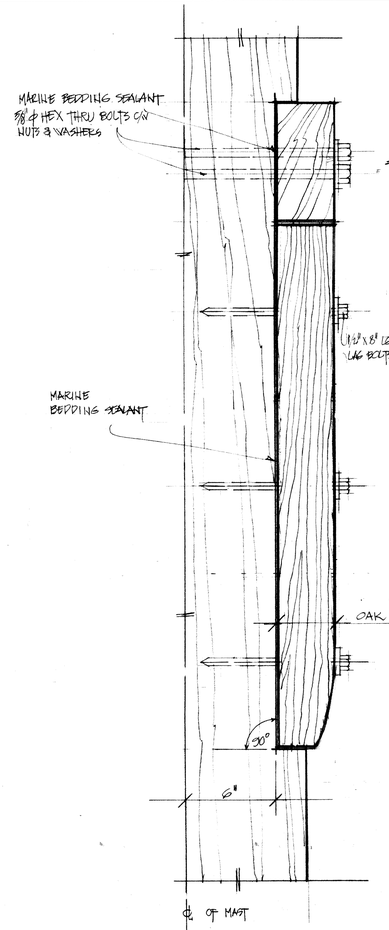

36 | 11 | 11 PART SECTION
SCALE 3" = 1'-0"

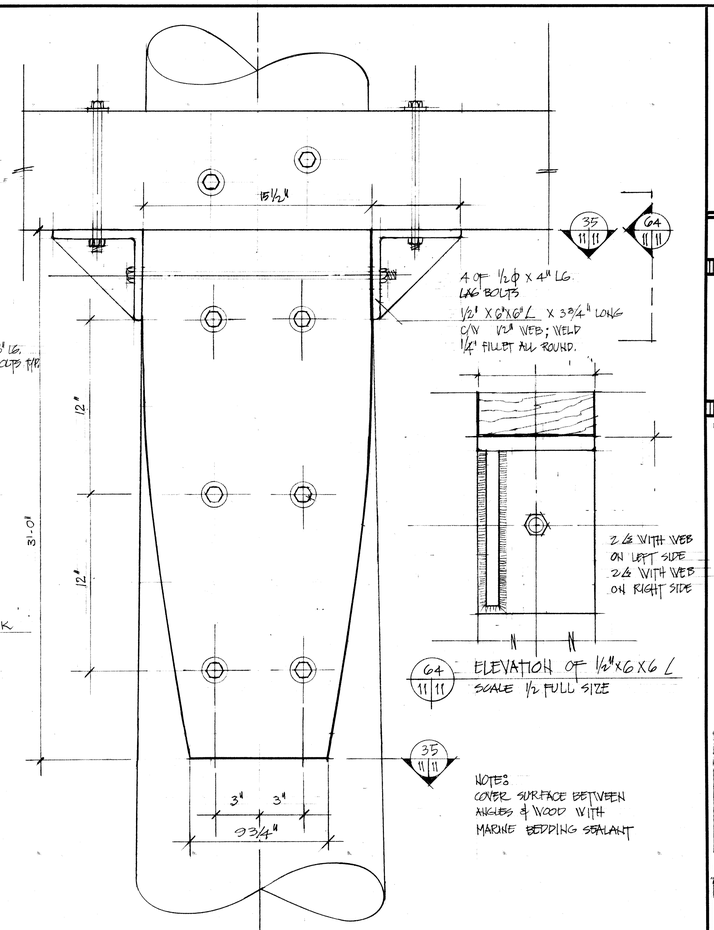

34 | 11 | 12 ELEVATION
SCALE 3" = 1'-0"

64 | 11 | 11 ELEVATION OF 1/2" x 6 x 6 L
SCALE 1/2 FULL SIZE

NOTE:
COVER SURFACE BETWEEN ANGLES & WOOD WITH MARINE BEDDING SEALANT

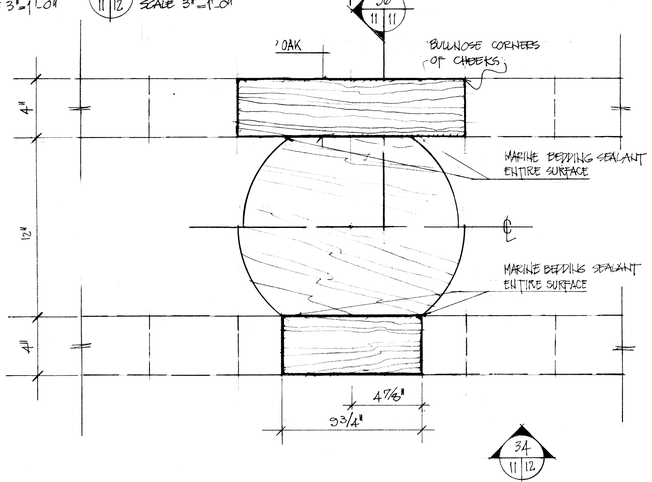

35 | 11 | 11 PLAN SECTIONS @ TOP & BOTTOM OF CHEEK
SCALE 3" = 1'-0"

NOTE: ALL BOLTS, PLATES, WASHERS, NUTS, & ANGLES ARE STAINLESS STEEL UNLESS NOTED OTHERWISE

Indian and Northern Affairs / Affaires indiennes et du Nord

revisions | date

HALIFAX DEFENCE COMPLEX ENGINEERING
RECOMMENDED BY DESIGN TEAM
INTERPRETATION 20.1.82.
RESEARCH 20.1.82
ARCHAEOLOGIST
ENGINEERING 29/1/82
ARCHITECTURAL

HALIFAX DEFENCE COMPLEX - ENGINEERING
APPROVALS | DATE
PROJECT MANAGER 29/1/82
PARK SUPERINTENDENT 29/1/82
RESEARCH
INTERPRETATION
ENGINEERING 29/1/82

A detail no. / détail nº
B location dwg. no. / sur dessin nº
C drawing no. / dessin nº

drawn by / tracé par: GERALD FELDERHOF
scale / échelle: AS NOTED
designed by / établi par: DESIGN TEAM
checked by / vérifié par: GERALD FELDERHOF
job captain / chef du projet | date
responsible officer / officier responsable | date: 26 FEB 82

project title / titre du projet:
SIGNAL MAST

drawing title / titre du dessin:
DETAILS OF SIGNAL MAST BASE & CHEEKS

reference no. / nº de référence: HAHC 80/P8
dwg no. / dessin nº: 11

HAHC 80/P8
SIGNAL MASTS HALIFAX DEFENCE COMPLEX RESTORATION CITADEL ASSET NO. 00322
DETAILS OF SIGNAL MAST BASE & CHEEKS
JANUARY 29 1982
DWG. NO. 11/23

IAND 56-61 (8-72) 7530-21-009-1218

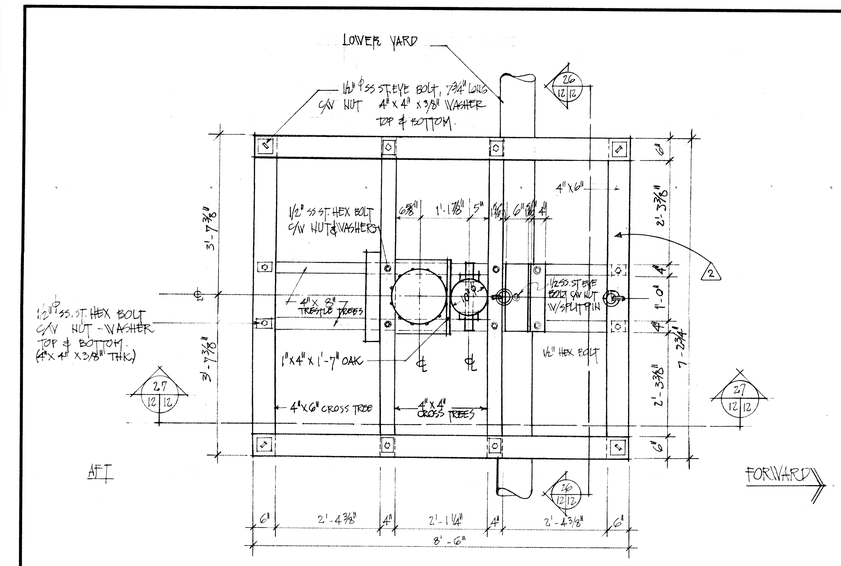

PLAN
SCALE: 3/4" TO 1'-0"

NOTE: TOP TO BE CONSTRUCTED FROM SELECT STRUCTURAL SPRUCE ALL DIMENSIONS ARE ACTUAL

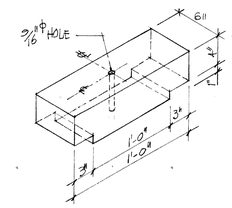

28 / 12 12 YARD SUPPORTING BLOCK
SCALE 1 1/2" = 1'-0"

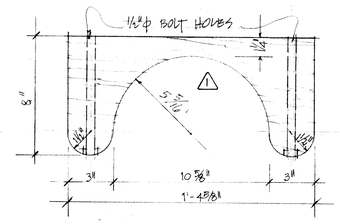

29 / 12 12 YARD HOLDING BLOCK ~ OAK
SCALE 3" = 1'-0"

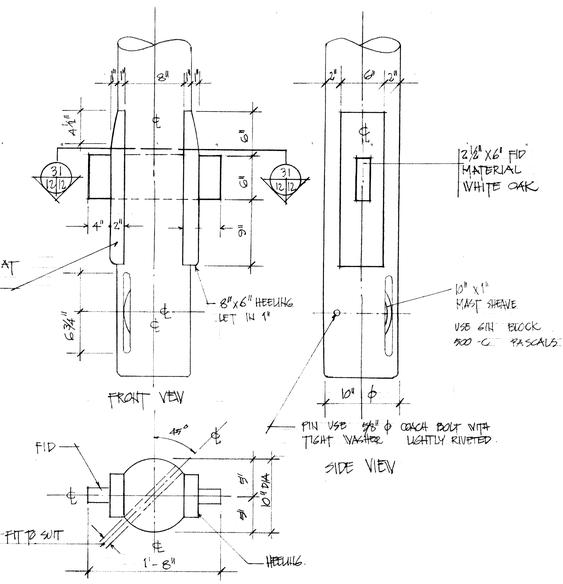

31 / 12 12 SECTION

30 / 12 12 TOP SIGNAL MAST
SCALE 1 1/8" = 1'-0"

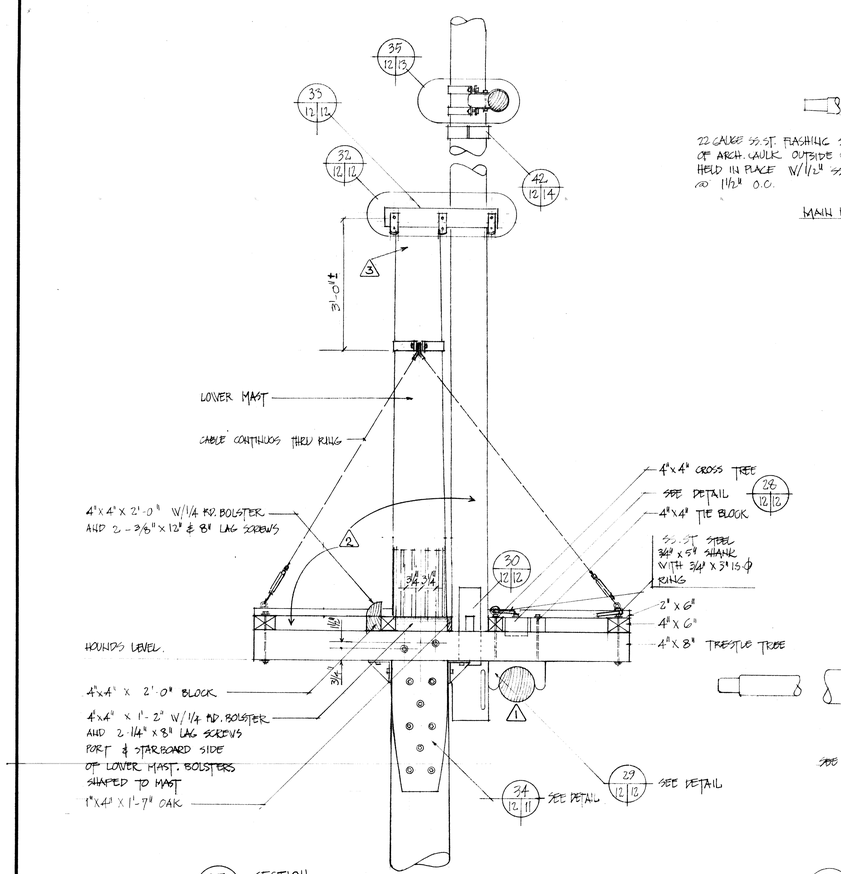

27 / 3 12 SECTION
SCALE 3/4" = 1'-0"

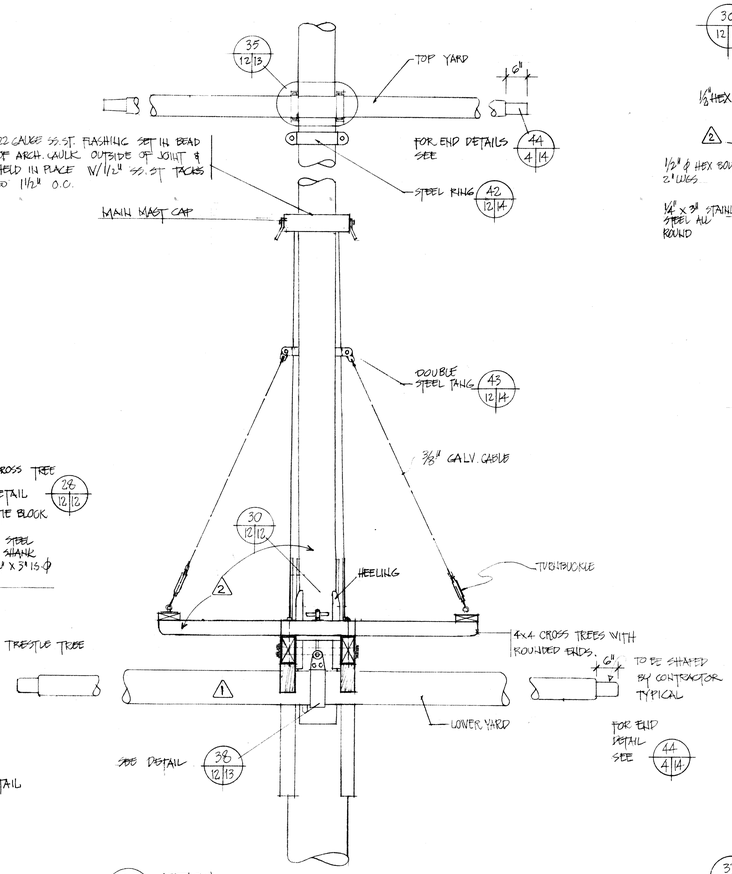

26 / 12 12 SECTION
SCALE 3/4" = 1'-0"

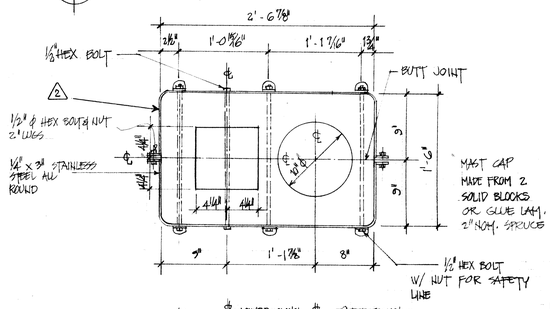

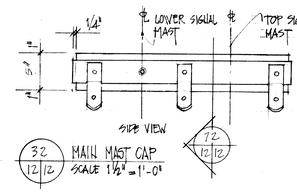

32 / 12 12 MAIN MAST CAP
SCALE 1 1/2" = 1'-0"

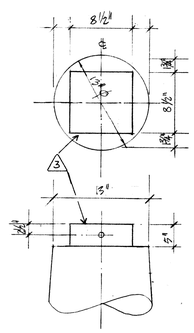

33 / 12 12 LOWER SIGNAL MAST
SCALE 1 1/2" = 1'-0"

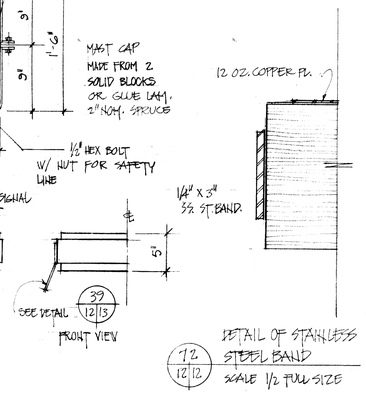

72 / 12 12 DETAIL OF STAINLESS STEEL BAND
SCALE 1/2 FULL SIZE

NOTE:
ALL BOLTS, PLATES, WASHERS & METAL BANDS ARE STAINLESS STEEL UNLESS OTHERWISE NOTED

Indian and Northern Affairs / Affaires indiennes et du Nord

revisions			date
P1	P2	P3	REFER TO DWG. NO. 3 FOR DESCRIPTIONS.

HALIFAX DEFENCE COMPLEX - ENGINEERING
RECOMMENDED BY DESIGN TEAM
INTERPRETATION 20.I.82
RESEARCH R.M.D. 20.1.82
ARCHAEOLOGIST
ENGINEERING 29/1/82
ARCHITECTURAL
HALIFAX DEFENCE COMPLEX - ENGINEERING
APPROVALS DATE
PROJECT MANAGER 29/1/82
PARK SUPERINTENDENT 29/1/82
RESEARCH
INTERPRETATION
ENGINEERING 29/1/82

A detail no. / détail nº
B location dwg. no. / sur dessin nº
C drawing no. / dessin nº

drawn by / tracé par: J.T. & G.O.F.
scale / échelle: AS SHOWN
designed by / établi par: DESIGN TEAM
checked by / vérifié par: GERAP FELDERHOF
job captain / chef du projet — date
responsible officer / officier responsable — date: 26 FEB 82

project title / titre du projet: SIGNAL MASTS

drawing title / titre du dessin: DETAILS

reference no. / nº de référence: HAHC 80P8
dwg no. / dessin nº: 12

HAHC 80/P8
SIGNAL MASTS HALIFAX DEFENCE COMPLEX RESTORATION CITADEL ASSET NO. 00022
DETAILS
DWG. NO. 12/23
JANUARY 29 1982

IAND 58-81 (8-72) 7530-21-028-1218

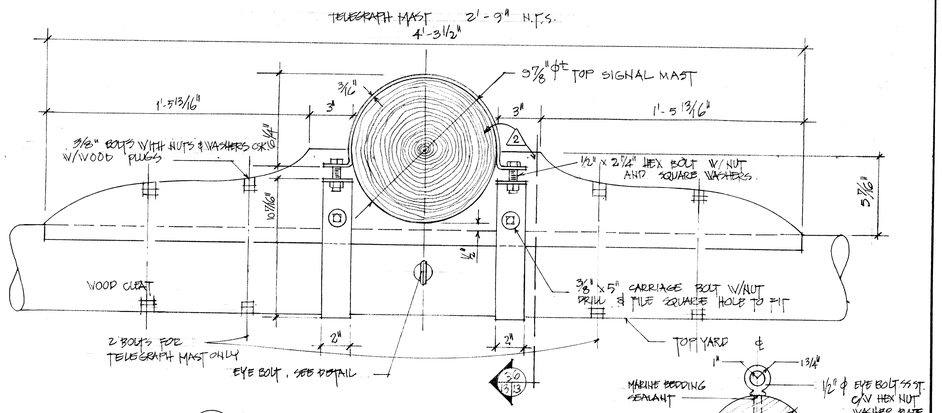

35 12/13 SIGNAL MAST ~ TOP YARD DETAIL
SCALE 3" = 1'-0"

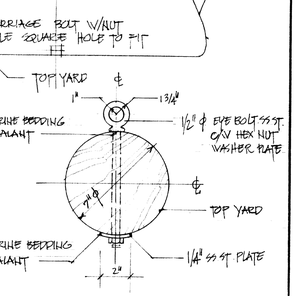

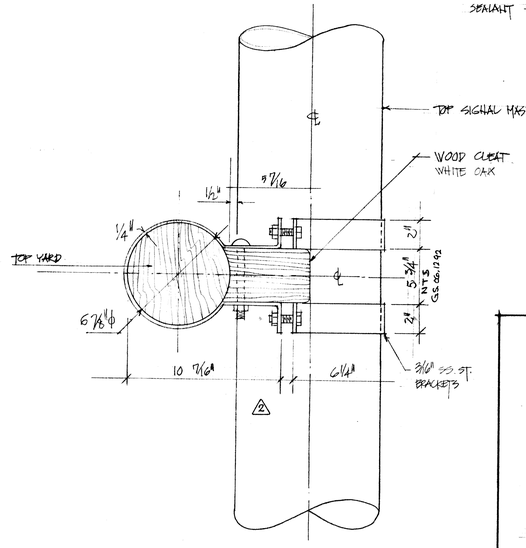

36 13 13 SECTION
SCALE 2 3/4" = 1'-0"

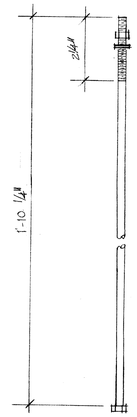

1/2" x 1'-10 1/4" SS ST. HEX BOLT W/NUT & WASHER (N.T.S.) P2

ELEVATION

37 12 13 DETAIL ~ SIGNAL MAST
SCALE ~ HALF FULL SIZE

NOTE: 4 REQUIRED

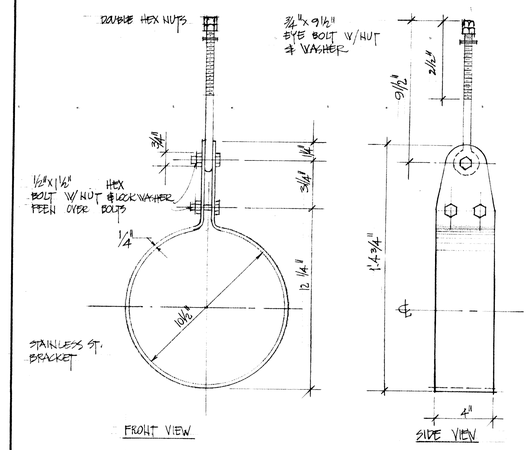

38 12 13 DETAIL ~ SIGNAL MAST
SCALE : 3" = 1'-0"

DELETED

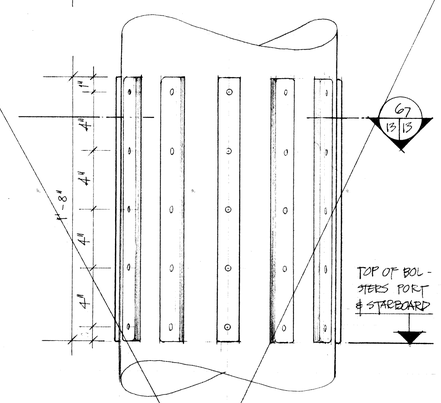

68 13 13 ELEVATION ~ SIGNAL MAST
SCALE 3/4" = 1'-0"

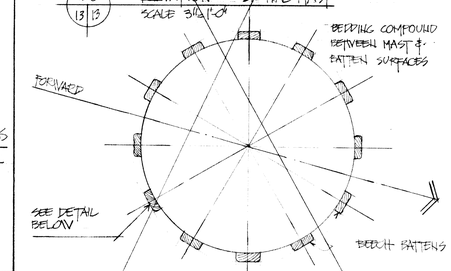

PLAN SECTION 67 13 13
SCALE 3" = 1'-0"

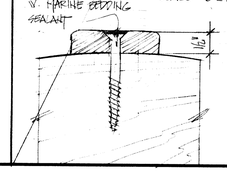

68 13 13

DETAIL OF BATTENS
SCALE ~ FULL SIZE

NOTE: BULL NOSE ALL EXPOSED CORNERS OF HARDWOOD BATTENS

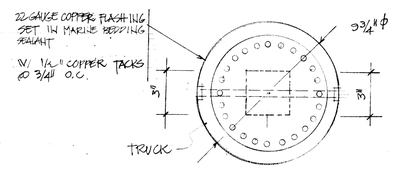

TOP VIEW

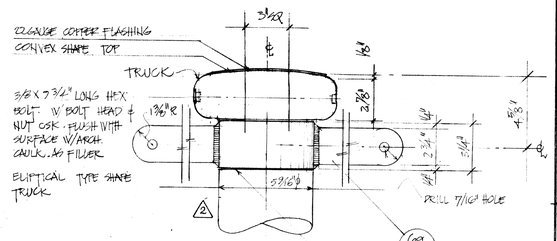

ELEVATION

40 4 13 TO MAST BAND ~ SIGNAL MAST & TELEGRAPH MAST
SCALE ~ 3" = 1'-0"

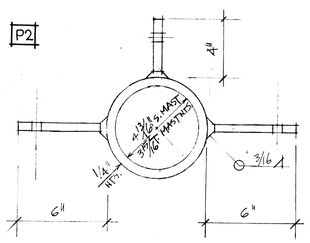

PLAN

69 13 13 METAL BAND FOR FLAG HALYARD BLOCKS
SCALE 3" = 1'-0" & BOSUN CHAIR BLOCK

NOTE: FOR INSIDE DIMENSION OF METAL BANDS CHECK DIMENSIONS OF SHAPED SPARS.

NOTE: ALL BOLTS, PLATES, WASHERS, NUTS, SCREWS & METAL BANDS ARE STAINLESS STEEL UNLESS OTHERWISE NOTED.

USE SPRING TYPE LOCK WASHERS WITH NUTS & BOLTS WHICH SECURE BANDS TO MAST & YARD.

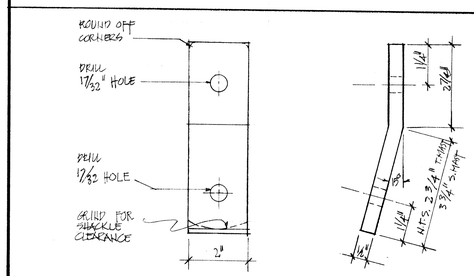

39 12 13 TANG BLANK DETAIL
SCALE ~ HALF FULL SIZE

Indian and Northern Affairs / Affaires indiennes et du Nord

revisions	date
P2 REFER TO DWG. NO. 3 FOR DESCRIPTION OF FIBER-GLASSING.	

HALIFAX DEFENCE COMPLEX ENGINEERING
RECOMMENDED BY DESIGN TEAM
INTERPRETATION 20-I-82
RESEARCH R.M.J. 20-1-82
ARCHEOLOGIST
ENGINEERING 29/1/82
ARCHITECTURAL
HALIFAX DEFENCE COMPLEX - ENGINEERING
APPROVALS DATE
PROJECT MANAGER 29/1/82
PARK SUPERINTENDENT 29/1/82
RESEARCH
INTERPRETATION
ENGINEERING 29/1/82

A detail no. / détail no
B location dwg. no. / sur dessin no
C drawing no. / dessin no

drawn by / tracé par: G.S. FELDERHOF
scale / échelle: AS NOTED
designed by / établi par: DESIGN TEAM
checked by / vérifié par: GERALD FELDERHOF
job captain / chef du projet — date
responsible officer / officier responsable — date: 26 FEB 82

project title / titre du projet: SIGNAL MASTS

drawing title / titre du dessin: DETAILS

reference no. / no de référence: HAHC 80P8
dwg no. / dessin no: 13

HAHC 80/P8
DWG. NO. 13/23
SIGNAL MASTS HALIFAX DEFENCE COMPLEX RESTORATION CITADEL ASSET NO. 00322
DETAILS
JANUARY 29 1982

IAND 50-61 (8-72) 7530-21-009-1218

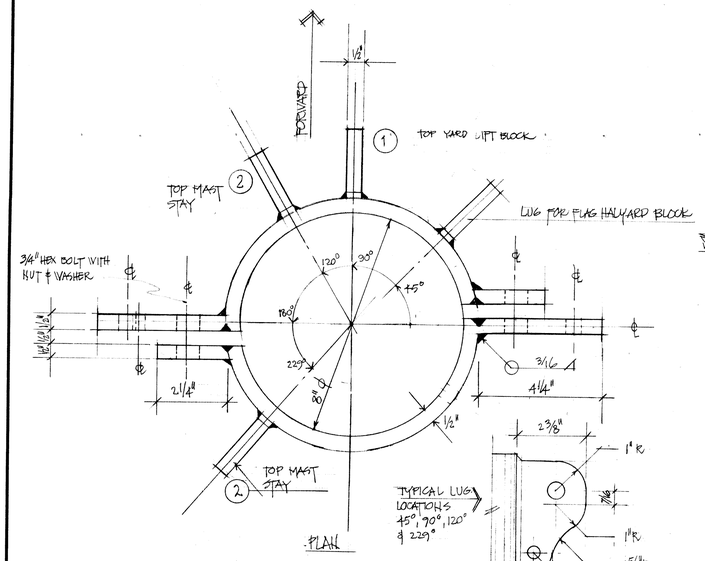

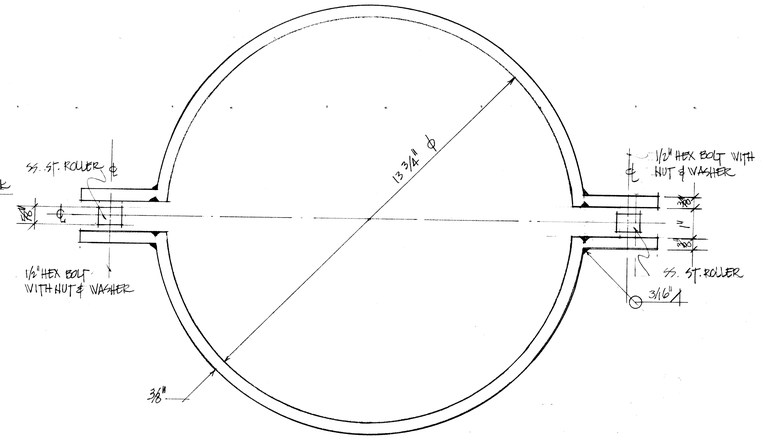

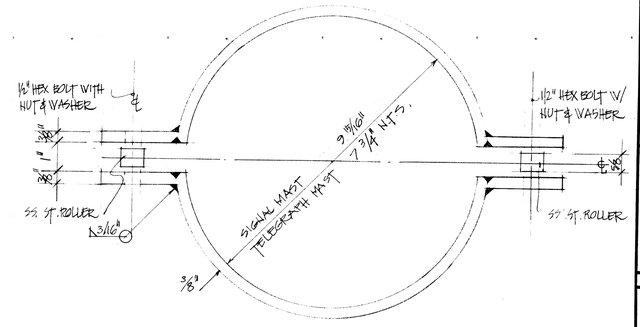

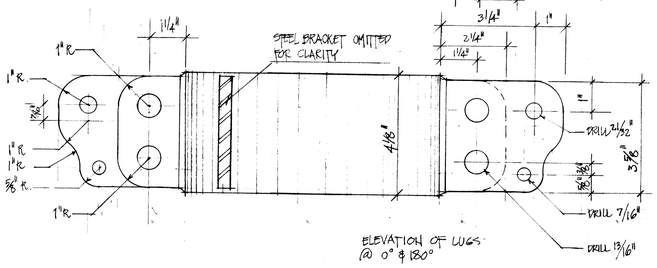

ELEVATION OF LUGS @ 0° & 180°

41 / 4 | 13 STEEL RING ~ SIGNAL TOP MAST
SCALE 1/2 FULLSIZE

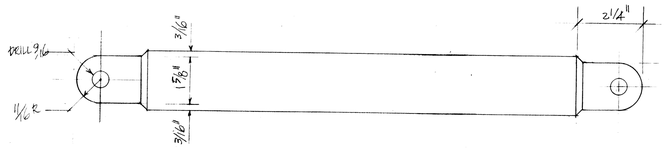

43 / 12 | 14 STEEL RING ~ SIGNAL LOWER MAST
SCALE ~ HALF FULL SIZE

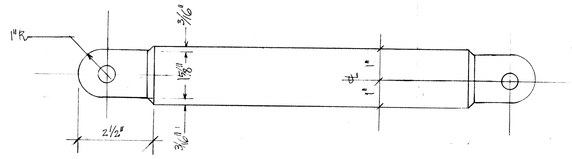

42 / 12 | 14 STEEL RING ~ TOP MAST, SIGNAL & TELEGRAPH MASTS
SCALE ~ HALF FULL SIZE

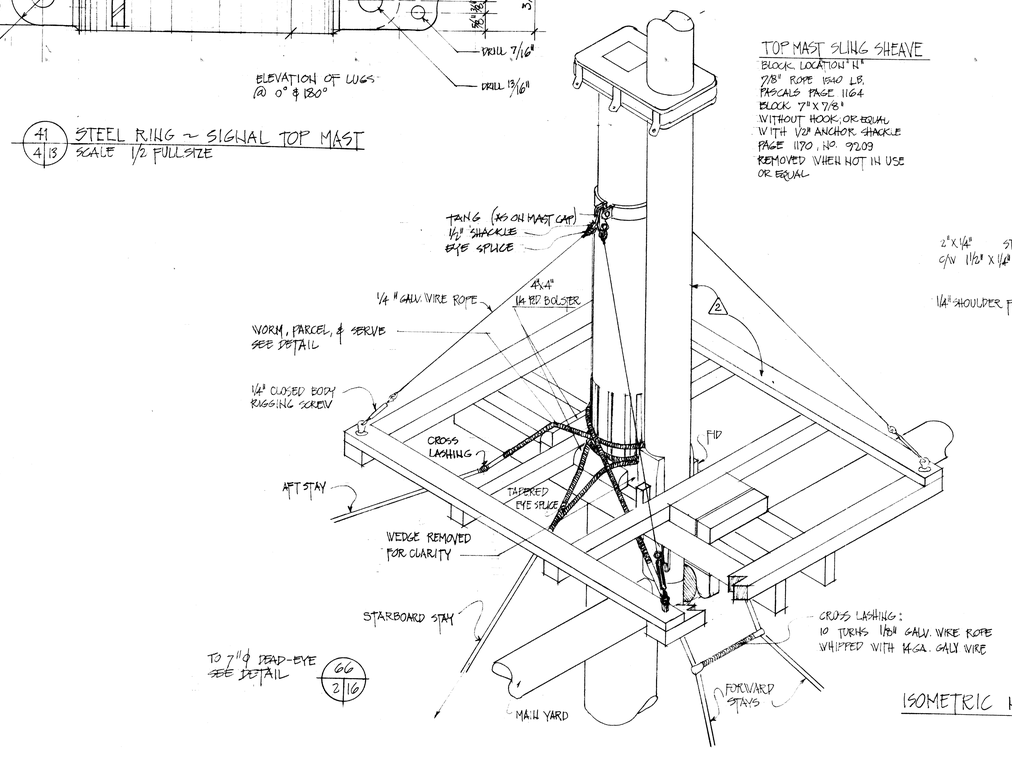

ISOMETRIC N.T.S.

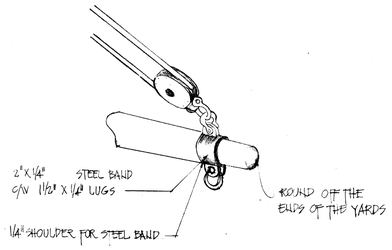

44 / 4 | 14 DETAIL
SCALE N.T.S.

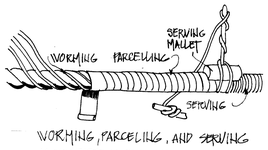

WORMING, PARCELING, AND SERVING AS DESCRIBED IN THE BOOK ~ THE MARLIN SPIKE SAILOR, BY HERVEY GARRETT SMITH, REPRINTED 1981

SERVING DETAIL FOR WIRE ROPE
NOT TO SCALE

NOTE:- ALL SERVING ON STAYS COVERED IN TAPERED CANVAS

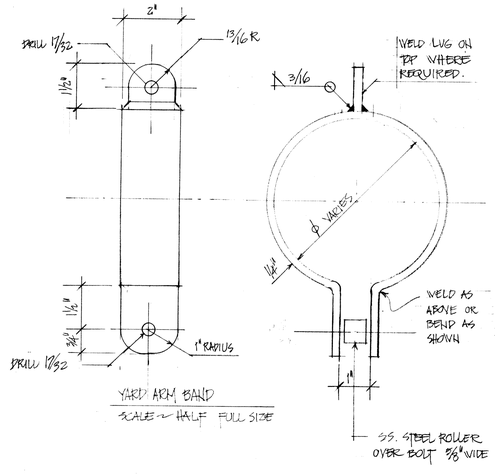

YARD ARM BAND
SCALE ~ HALF FULL SIZE

NOTE: ALL BOLTS, PLATES, WASHERS, NUTS & METAL BANDS ARE STAINLESS STEEL UNLESS OTHERWISE NOTED

USE SPRING TYPE LOCK WASHER (STAINLESS STEEL) WITH NUTS & BOLTS WHICH SECURE MAST BANDS & YARD BANDS.

Indian and Northern Affairs / Affaires Indiennes et du Nord

revisions / date
P2 P3 REFER TO DWG. NO 3 FOR DESCRIPTION OF FIBERGLASSING

HALIFAX DEFENCE COMPLEX-ENGINEERING
RECOMMENDED BY DESIGN TEAM
INTERPRETATION 20 I 82
RESEARCH 30 1 82
ARCHAEOLOGIST
ENGINEERING 29/1/82
ARCHITECTURAL

HALIFAX DEFENCE COMPLEX - ENGINEERING
APPROVALS — DATE
PROJECT MANAGER 29/1/82
PARK SUPERINTENDENT 29/1/82
RESEARCH
INTERPRETATION
ENGINEERING 29/1/82

A detail no. / détail nº
B location dwg. no. / sur dessin nº
C drawing no. / dessin nº

drawn by / tracé par: G.O. FELDERHOF
scale / échelle: AS SHOWN
designed by / établi par
checked by / vérifié par: GERALD FELDERHOF
job captain / chef du projet — date
responsible officer / officier responsable — date: 26 FEB 82

project title / titre du projet: SIGNAL MASTS

drawing title / titre du dessin: DETAILS

reference no. / nº de référence: HAHC 80P8
dwg no. / dessin nº: 14

DWG. NO. 14/23
SIGNAL MASTS HALIFAX DEFENCE COMPLEX RESTORATION CITADEL ASSET NO. 00322
DETAILS
JANUARY 29 1982
HAHC 80P8

IAND 56-81 (5-72) 7530-21-000-1218

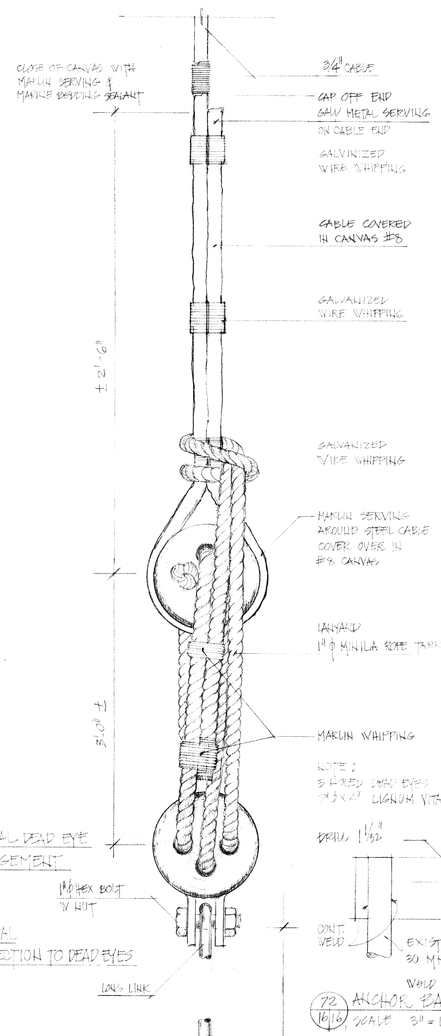

67/2/16 MAINSTAY RIGGING DETAILS ~ TYPICAL
SCALE 3" = 1'-0"

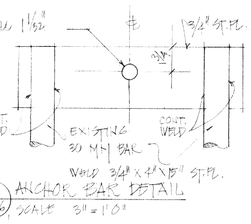

72/16/16 ANCHOR BAR DETAIL
SCALE 3" = 1'-0"

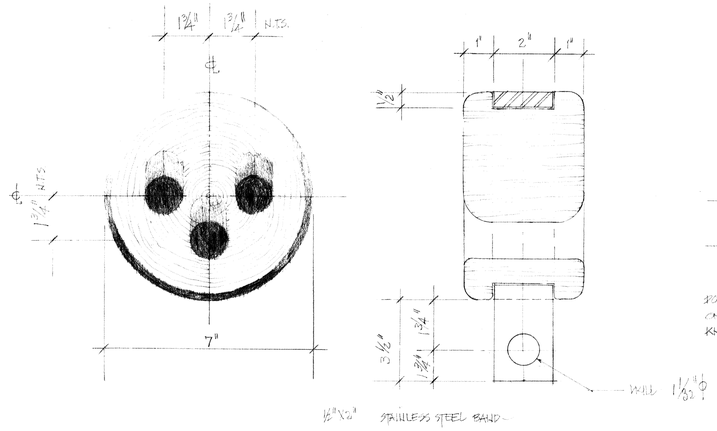

SECTION THRU CENTRE

LOWER THREE HOLED DEAD EYE FOR 1" MANILA ROPE
SCALE ~ 1/2 FULL SIZE

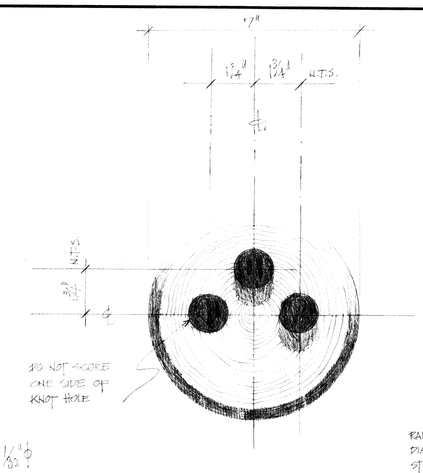

ELEVATION

REFERENCE SOURCE FOR SHAPE OF DEAD EYES:

THE DEAD EYE HOW IT WAS MADE IN LUNENBURG NOVA SCOTIA BY JOHN M. KOCHISS PUBLISHED BY THE MYSTIC HISTORICAL ASSOCIATION, INCORPORATED MYSTIC, CONNECTICUT. 1970

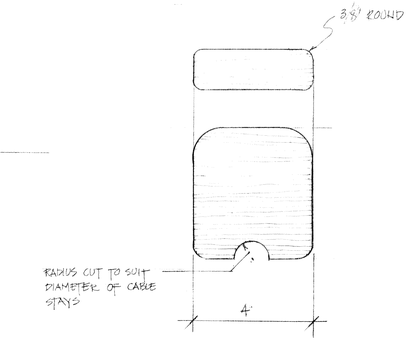

SECTION THRU CENTRE

TOP THREE HOLED DEAD-EYE FOR 1" MANILA ROPE
SCALE ~ HALF FULL SIZE

OUTLINE FINISH SCHEDULE

SPARS	: PAINT ONE COAT MARINE PRIMER & TWO COATS WHITE MARINE ENAMEL
PINRAIL (SIGNAL MAST)	: MARINE TYPE SPAR VARNISH (TIBBETTS OR EQUAL)
PINRAIL: (TELEGRAPH MAST)	PAINT ONE COAT MARINE PRIMER & TWO COAT WHITE MARINE ENAMEL
PLATFORM SIGNAL MAST	: BASE PORCH ENAMAL COLOUR (C.G.S. 201-107) ONE PRIMER & TWO FINISH COATS
SIGNAL MAST & PLATFORM RAILING	: PAINT ONE COAT MARINE PRIMER & TWO COATS WHITE MARINE ENAMEL.
SIGNAL MAST & TEL. MAST TOP	: SAME FINISH AS ABOVE
ALL HARDWARE ON MASTS	: JAPANNED BLACK UNLESS OTHERWISE NOTED 140 R. TIBBETS BLACK
ALL CABLE STAYS	: GALVANIZED CABLES, TARRED STOCKHOLM TAR OR EQUAL
ALL MANILA ROPES	: TARRED, STOCKHOLM TAR OR EQUAL
SHACKLES	: GALVANIZED & TARRED, STOCKHOLM TAR OR EQUAL
CHAIN	: TARRED, STOCKHOLM TAR OR EQUAL
CANVAS BOOT @ STOVE BASE	: TARRED STOCKHOLM TAR OR EQUAL

NOTE: ALL FLAG & SIGNAL HALYARDS SHALL BE SPLICED WITH A 7/8" ϕ THIMBLE. SPLICE ONE 3/8" BRASS SHACKLE WITH EACH LINE

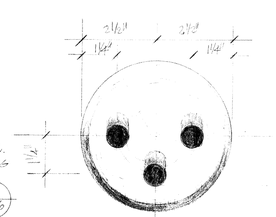

5" DEAD EYE
HALF FULL SIZE

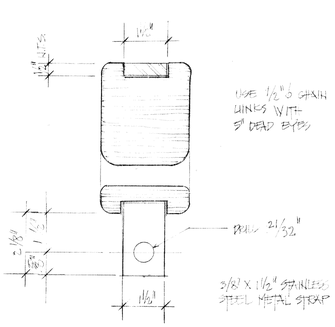

DEAD-EYE LIST	QTY REQUIRED SIGNAL MAST	QTY REQUIRED TELEGRAPH MAST	TOTAL	NOTES:
				MINE THE FINISH ON DEAD EYES
DEAD-EYES ~ LOWER MAST STAYS	7" ϕ 4 (3/4" CABLE)	6" ϕ 10 (5/8" CABLE)	28	1" ϕ & 15/16" ϕ MANILA ROPE FOR 7" & 6" DEAD E.
DEAD-EYES ~ TOP MAST STAYS	5" ϕ 8 (1/2" CABLE)	4" ϕ 10 (3/8" CABLE)	18	5/8" ϕ MANILA ROPE

SIGNAL MAST ~ ROPE LIST

NOTE: ALL MANILA ROPES ARE TARRED (STOCKHOLM TAR OR APPROVED EQUAL)

LOCATION No.	ROPE NAME/LOCATION	ROPE DIA.	TYPE	LENGTH (FEET)	No. REQ'D	NOTES:
1, & 2	PEAK HALYARD	1/2"	MANILA	270'	2	
3, & 4	TOP YARD LIFTS	1/2"	DO.	220'	2	YARD MAY BE LIFTED FROM GROUND WITH THESE ROPES
5, 6, 7, & 8	TOP YARD FLAG HALYARDS	1/2"	DO.	175'	4	
9, 11, & 12	TOP FLAG HALYARDS	1/2"	DO.	240'	3	
19, 20, 21, 22, 23, & 24	MAIN YARD FLAG HALYARDS	1/2"	DO.	150'	6	
13	TOP YARD SLING	1/2"	DO.	220'	1	TO BE STORED ON MAST TO BE INSPECTED FOR LOWERING
14	TOP MAST SHEAVE SLING	7/8"	DO.	300'	1	ROPE TO BE STORED INDOORS
15 & 16	MAIN YARD LIFTS	5/8"	DO.	280'	2	
17 & 18	MAIN YARD SLINGS	5/8"	DO.	160'	2	
25	ROPE HOISTING LINE	1/2"	DO.	270'	1	
9	BOSUN CHAIR LINE	5/8"	DO.	600'	1	POLYPROPYLENE, BLACK. (TO BE STORED INDOORS)

TELEGRAPH MAST ~ ROPE LIST

NOTE: ALL MANILA ROPES ARE TARRED (STOCKHOLM TAR OR APPROVED EQUAL)

LOCATION No.	ROPE NAME/LOCATION	ROPE DIA.	TYPE	LENGTH (FEET)	No. REQ'D	NOTES:
1, & 2	PEAK HALYARDS	1/2"	MANILA	180'	2	
3	TOP MAST SLING	5/8"	DO.	160'	1	ROPE TO BE STORED INDOORS.
4 & 5	YARD LIFTS	5/8"	DO.	190'	2	
6, 7	YARD SLINGS	5/8"	DO.	110'	2	STORED ON MAST MUST BE INSPECTED BEFORE LOWERING
8, 10, & 11	YARD FLAG HALYARDS	1/2"	DO.	90'	4	
12	ROPE HOISTING LINE	1/2"	DO.	160'	1	POLYPROPYLENE, BLACK

SIGNAL MAST & TELEGRAPH MAST ~ BLOCK LIST

NOTE: ALL WOOD BLOCK SHELLS TO BE ASH W.D. AND TARRED 3 COATS

LOCATION	BLOCK NAME/LOCATION	ROPE DIA.	SHEAVE DIA.	BLOCK SIZE IN INCHES	S. MAST QTY REQUIRED	T. MAST QTY REQUIRED	NOTES:
A & B	MAST HEAD FLAG HALYARD BLOCKS	1/2"	2 1/4"	4"	2	2	
C & D	TOP YARD LIFT BLOCKS	1/2"	2 1/4"	4"	2		
E, F, G & H	TOP YARD FLAG HALYARD BLOCKS	1/2"	2 1/4"	4"	4		
J, K, & L	TOP BAND FLAG HALYARD BLOCKS	1/2"	2 1/4"	4"	3		USED WHEN FLYING DRESS FLAGS ONLY
M	TOP YARD SLING BLOCK	1/2"	2 1/4"	4"	1		
N	S.MAST/T.MAST TOP MAST SLING BLOCK	7/8"/5/8"	4 3/4"/3"	8"/5"	1	1	REMOVE AFTER USE & STORE INDOORS
Q & R	MAIN YARD SLING BLOCKS	5/8"	3"	5"	2	3	WITH BECKETS
O & P	MAIN YARD (MAST) LIFT BLOCKS	5/8"	3"	5"	2	2	REMOVE AFTER USE & STORE INDOORS
S & T	MAIN YARD (ARM) LIFT BLOCKS	5/8"	3"	5"	2	2	
U, V, W, X, Y, Z	MAIN YARD FLAG HALYARD BLOCKS	1/2"	1 3/4"	4"	6	4	
	TOP MAST SLING SHEAVE (S. MAST)	7/8"	10"	N.A.	1		PASCALS No 900 C PAGE 1164. STRIP AND USE SHEAVE ONLY
	TOP MAST SLING SHEAVE (T. MAST)	5/8"	8"	N.A.		1	
	BOSUN CHAIR BLOCK	5/8"	3"	5"	1	1	

Indian and Northern Affairs / Affaires indiennes et du Nord

revisions | date

DEPARTMENT OF INDIAN AFFAIRS AND NORTHERN DEVELOPMENT
PROJECT TEAM
PROJECT MANAGER 20-I-82
PLANNING 27/1/82
ARCHITECTURE
HALIFAX DOCKYARD COMPLEX - ENGINEERING
APPROVAL DATE
PROJECT MANAGER
PARK SUPERVISOR
RESEARCH
INTERPRETATION
ENGINEERING

A detail no. / détail no
B location dwg. no. / sur dessin no
C drawing no. / dessin no

drawn by / tracé par: G.J. FELDERHOF
scale / échelle: AS NOTED
designed by / établi par
checked by / vérifié par: G.J. FELDERHOF
Job captain / chef du projet | date
responsible officer / officier responsable | date: 26 FEB 82

project title / titre du projet: SIGNAL MASTS

drawing title / titre du dessin: DEAD EYES ROPE LISTS & BLOCK LIST

reference no. / no de référence: HAHC 80/P8
dwg no. / dessin no: 16

HAHC 80/P8
SIGNAL MASTS HALIFAX DEFENCE COMPLEX RESTORATION CITADEL ASSET
DWG. NO. 16/23
NO. 00322
DEAD EYES ROPE LISTS & BLOCK LIST
JANUARY 29 1982

IAND 56-81 (8-72) 7530-21-029-1218

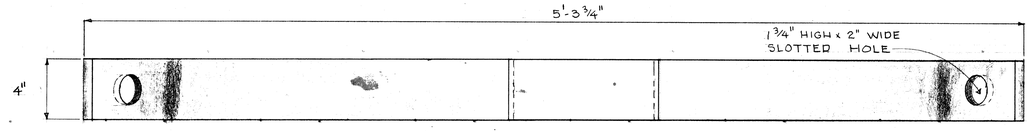

ELEVATION
SCALE: 3" = 1'-0"

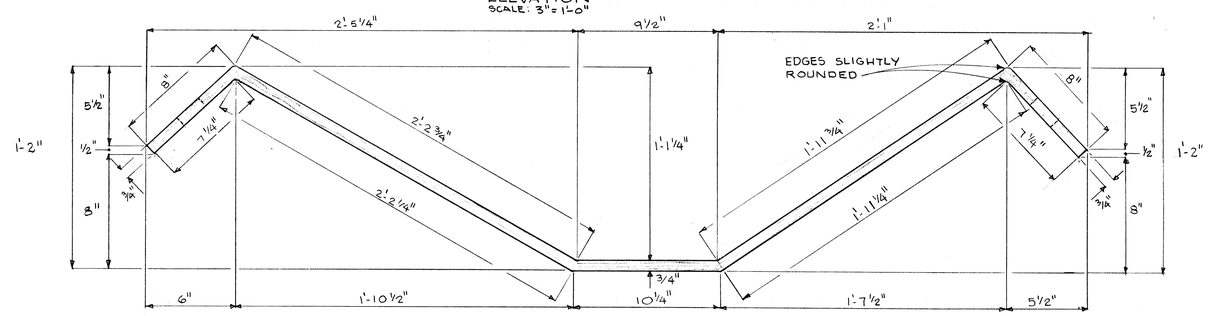

HOTE: CHECK DIMENSIONS AGAINST ACTUAL SITE CONDITIONS AFTER MAST IS IN PLACE

PLAN OF STRAP
SCALE: 3" = 1'-0"

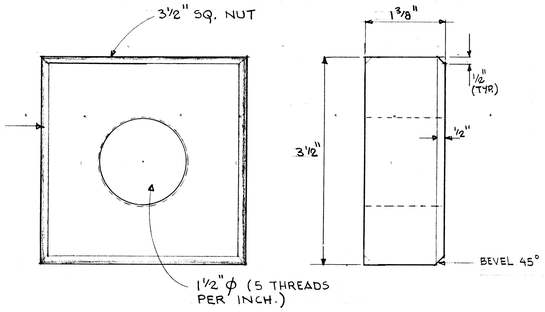

ELEVATION OF NUT
SCALE: FULL SIZE

END ELEVATION

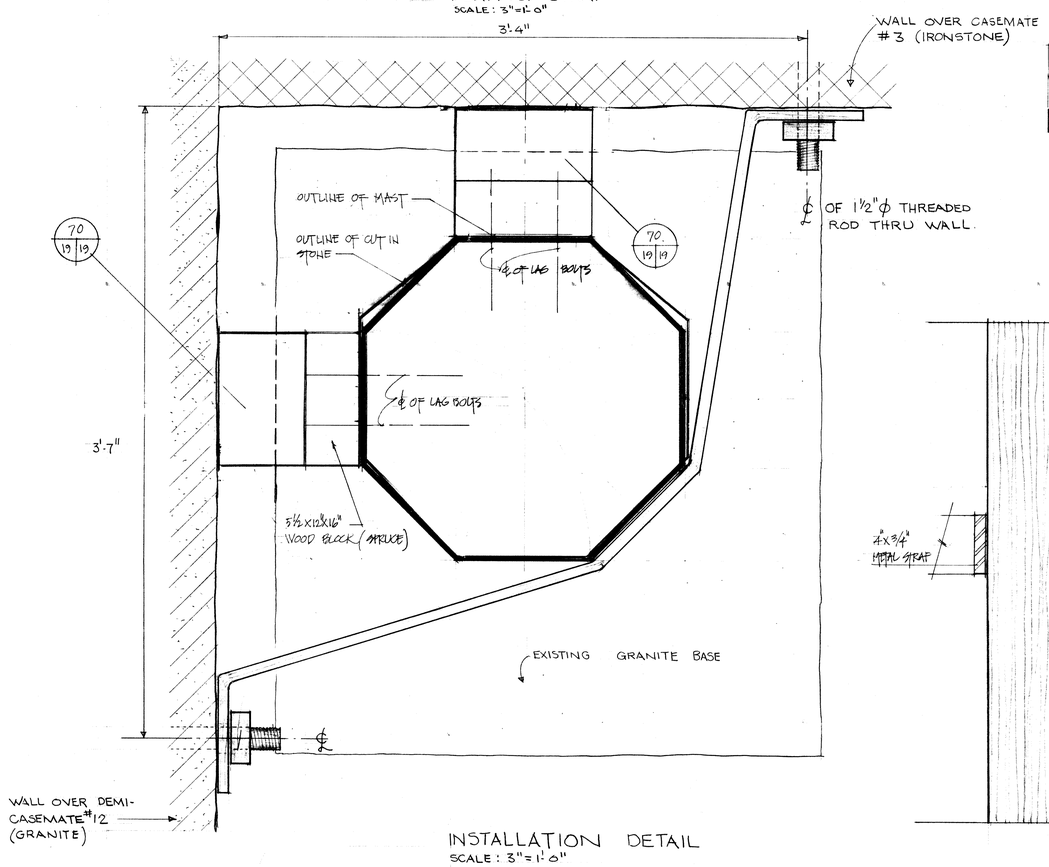

INSTALLATION DETAIL
SCALE: 3" = 1'-0"

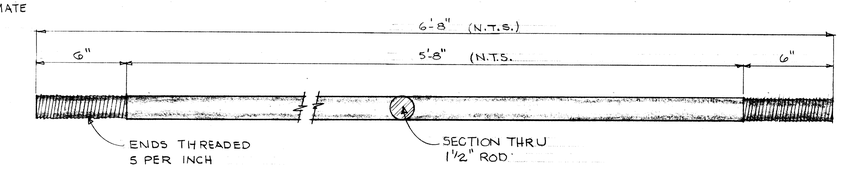

PLAN AND SECTION OF 1 1/2"φ THREADED ROD
SCALE: 3" = 1'-0"

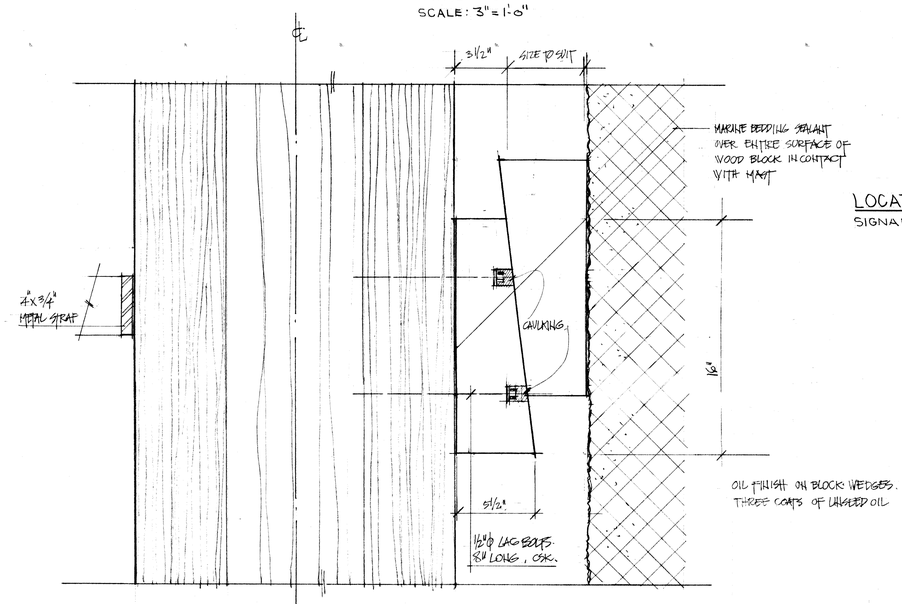

LOCATION OF HARDWARE
SIGNAL MAST S.E. SALIENT

STRAP ASSEMBLY FOR SIGNAL MAST ~ PLAN
COPIED FROM ARTIFACTS IN EXTERIOR WALL OVER DEMI-CASEMATE #12

HARDWARE NO. 31 A

70 / 19 / 19 BLOCK WEDGES BETWEEN MAST & RETAINING WALLS ~ ELEVATION
SCALE 3" = 1'-0"

HALIFAX DEFENCE COMPLEX - ENGINEERING	
RECOMMENDED BY DESIGN TEAM	
INTERPRETATION	20.01.82
RESEARCH	R.M.J. 20.1.82
ARCHAEOLOGIST	
ENGINEERING	19/1/82
ARCHITECTURAL	

HALIFAX DEFENCE COMPLEX - ENGINEERING	
APPROVALS	DATE
PROJECT MANAGER	19/1/82
PARK SUPERINTENDENT	20/1/82
RESEARCH	20/1/82
INTERPRETATION	
ENGINEERING	20/1/82

Indian and Northern Affairs / Affaires indiennes et du Nord

revisions | date

A detail no. / détail nº
B location dwg. no. / sur dessin nº
C drawing no. / dessin nº

drawn by / tracé par: GERALD SMITH
scale / échelle: AS SHOWN
designed by / établi par:
checked by / vérifié par: GERALD FELDERHOF
job captain / chef du projet | date
responsible officer / officier responsable: 26 FEB '82 | date
project title / titre du projet: SIGNAL MAST
drawing title / titre du dessin: STRAP ASSEMBLY FOR SIGNAL MAST
reference no. / nº de référence: HAHC 80 4/8
dwg no. / dessin nº: 19

HAHC 80/98
SIGNAL MASTS HALIFAX DEFENCE
COMPLEX RESTORATION CITADEL ASSET
NO. 00322

STRAP ASSEMBLY FOR SIGNAL MAST

DWG. NO. 19/23
JANUARY 29 1982

IAND 55-81 (8-72) 7530-21-029-1218

HAHC 80/P8
SIGNAL MASTS HALIFAX DEFENCE
COMPLEX RESTORATION CITADEL ASSET
NO. 00322

DWG. NO. 20/23

LIGHTING PROTECTION SYSTEM

JANUARY 29 1982

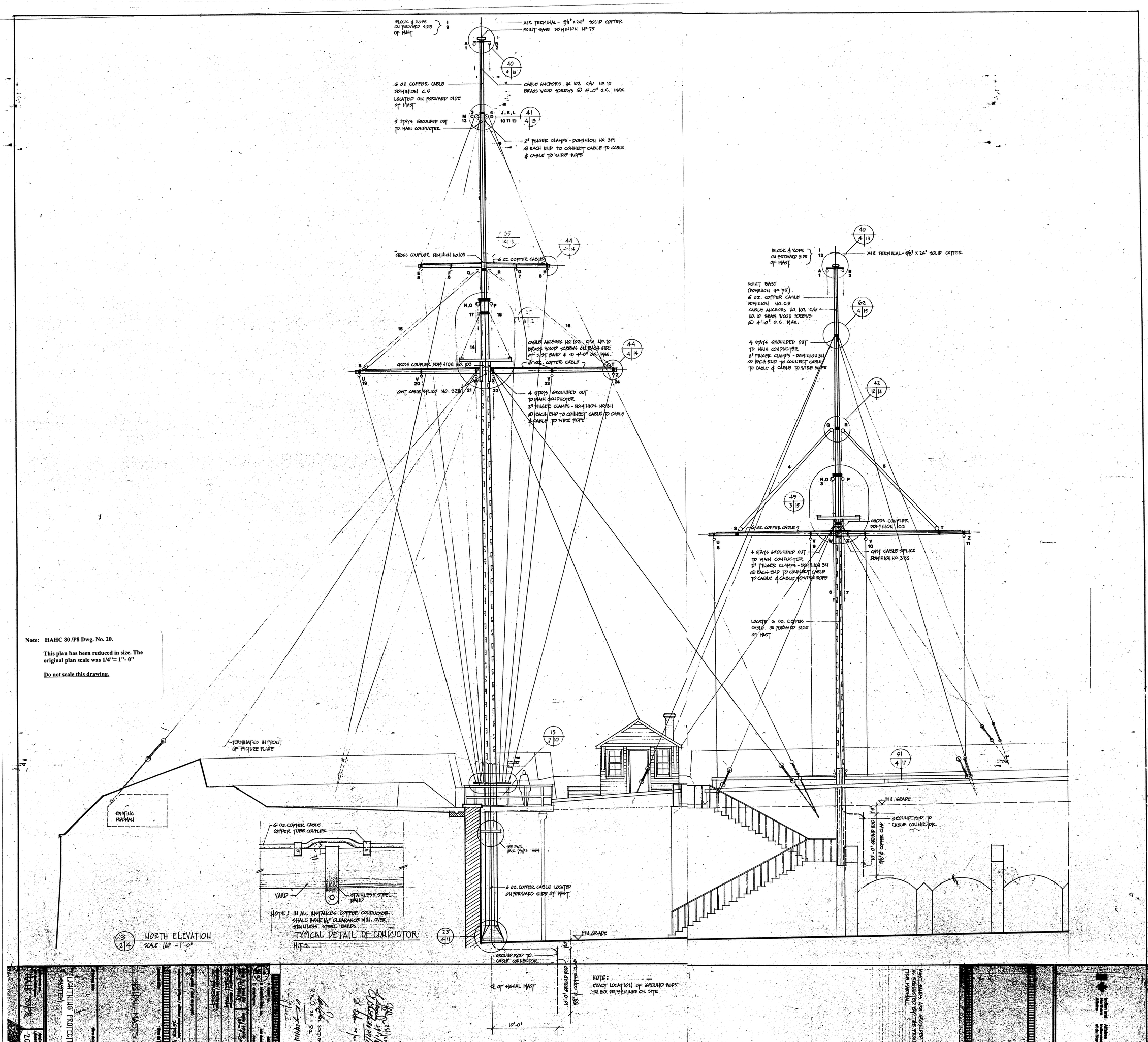

Note: HAHC 80 /P8 Dwg. No. 20.

This plan has been reduced in size. The original plan scale was 1/4"= 1"- 0"

Do not scale this drawing.