Public Works and Government Services Canada | Travaux publics et Services gouvernementaux Canada

RETURN BIDS TO:
RETOURNER LES SOUMISSIONS À:

Bid Receiving Public Works and Government Services Canada/Réception des soumissions Travaux publics et Services gouvernementaux Canada
1713 Bedford Row
Halifax, N.S./Halifax, (N.É.)
B3J 1T3
Bid Fax: (902) 496-5016

SOLICITATION AMENDMENT
MODIFICATION DE L'INVITATION

The referenced document is hereby revised; unless otherwise indicated, all other terms and conditions of the Solicitation remain the same.

Ce document est par la présente révisé; sauf indication contraire, les modalités de l'invitation demeurent les mêmes.

Comments - Commentaires

Title - Sujet Drydocking - CCGS Alfred Needler	
Solicitation No. - N° de l'invitation F5561-150892/A	**Amendment No. - N° modif.** 002
Client Reference No. - N° de référence du client F5561-15-0892	**Date** 2015-12-07
GETS Reference No. - N° de référence de SEAG PW-$HAL-403-9679	
File No. - N° de dossier HAL-5-75191 (403)	**CCC No./N° CCC - FMS No./N° VME**
Solicitation Closes - L'invitation prend fin **at - à 02:00 PM** **on - le 2015-12-22**	**Time Zone** **Fuseau horaire** Atlantic Standard Time AST
F.O.B. - F.A.B. **Plant-Usine:** ☐ **Destination:** ☑ **Other-Autre:** ☐	
Address Enquiries to: - Adresser toutes questions à: Brow, Theresa	**Buyer Id - Id de l'acheteur** hal403
Telephone No. - N° de téléphone (902) 496-5166 ( )	**FAX No. - N° de FAX** (902) 496-5016
Destination - of Goods, Services, and Construction: **Destination - des biens, services et construction:**	

Vendor/Firm Name and Address
Raison sociale et adresse du fournisseur/de l'entrepreneur

Instructions: See Herein

Instructions: Voir aux présentes

Delivery Required - Livraison exigée	**Delivery Offered - Livraison proposée**
Vendor/Firm Name and Address **Raison sociale et adresse du fournisseur/de l'entrepreneur** **Telephone No. - N° de téléphone** **Facsimile No. - N° de télécopieur**	
Name and title of person authorized to sign on behalf of Vendor/Firm (type or print) **Nom et titre de la personne autorisée à signer au nom du fournisseur/ de l'entrepreneur (taper ou écrire en caractères d'imprimerie)** **Signature** **Date**	

Issuing Office - Bureau de distribution

Atlantic Region Acquisitions/Région de l'Atlantique Acquisitions
1713 Bedford Row
Halifax, N.S./Halifax, (N.É.)
B3J 3C9
Nova Scot

Canada

Fisheries and Oceans Canada
Canadian Coast Guard

Pêches et Océans Canada
Garde côtière canadienne

CANADIAN COAST GUARD

REFIT SPECIFICATION
CCGS ALFRED NEEDLER

SPECIFICATION NO. 15-A018-013-1

JANUARY 5 – FEBRUARY 22, 2016

This page is intentionally left blank.

TABLE OF CONTENTS

TABLE OF CONTENTS

CCGS Alfred Needler
Jan. 5th – Feb. 22nd, 2016 Dry-Docking Refit

GENERAL NOTES

The **CCGS Alfred Needler** is an Offshore Fisheries Science vessel operated by the Canadian Coast Guard.

VESSEL PARTICULARS:

Year Built	1982
Yard	Ferguson Industries Limited, Pictou, N.S.
Length, Overall	165.00’
Length, Between Perpendiculars	144.67’
Breadth, Moulded	36’
Depth, Moulded	14.75’
Rake of Keel	3.90’
Mean Draft, Extreme	13.20’
Displacement, Extreme	1123 L. Tons
Gross Tonnage	925.03

1. **ON-SITE PROJECT OFFICER:**

All the specified work, as well as all work arising, shall be completed to the satisfaction of the On-site Project Officer who, unless otherwise advised, will be the vessel’s **Chief Engineer**, or his/her designated representative. Upon completion of each item of the specification, the Chief Engineer shall be notified so that he/she may inspect the work prior to the complete closing up of any work. Failure to give notification does not absolve Contractor of the responsibility of providing Chief Engineer the opportunity to inspect any item. Inspection of any item by the Chief Engineer does not substitute for any required inspection by Transport Canada Marine Safety Branch (TCMSB), Public Works and Government Services Canada (PWGSC) or Health Canada (HC).

2. **SAFETY:**

Vessel shall be under the Contractor’s Safety Management program while under their Care & Custody. Potential Contractors shall include with their bids the name of their Safety Manager or Supervisor who will ensure that these requirements for workplace safety are met. While under CCG Care & Custody the ISM Safety annex shall apply**.**

3. **SUB-CONTRACTORS:**

All conditions, stipulations etc. listed in the General Notes apply to any Sub-Contractors employed by the Main Contractor to carry out work on any Specification item.

4. **SCHEDULE:**

At the Pre-Refit Meeting, the successful Contractor shall provide a Production Gantt Chart or Schedule showing commencement and completion dates for each item in this specification. This document shall highlight any critical dates and be capable of showing the effects of late completion date of the work package. Contractor shall provide updated Production Schedules to the Chief Engineer, Vessel Maintenance Manager and PWGSC Inspector immediately at any point the schedule is revised.

GENERAL NOTES

5. **SAFE WORK CERTIFICATES:**

Before any cleaning, painting or hot work is commenced in confined spaces or machinery compartments, Contractor and subcontractor personnel issuing these certificates must be fully trained, qualified and certified in accordance with Canada Labour Code requirements and all relevant provincial legislation. Certificates shall clearly state the type of work permitted and are to be renewed as required by the regulations. Contractor and his sub-Contractors are advised that any work carried out in confined spaces as defined by the Canada Labour Code (CLC) and relevant provincial legislation must fully comply with all provisions therein.

6. **WELDING:**

All hotwork and welding procedures shall be done in accordance with Canadian Coast Guard Welding Specification:

- Document # **CT-043-EQ-EG-001-E** (English), or **CT-043-EQ-EG-001-F** (French)

Contractor must ensure that welding is performed by a welder certified by the Canadian Welding Bureau (CWB) in accordance with the requirements of the following Canadian Standards Association (CSA) standards:

i. **CSA W47.1, Certification for Companies for Fusion Welding of Steel Structures (Minimum division level 2.0); and**

ii. **CSA W47.2-M1987 (R2003), Certification for Companies for Fusion Welding of Aluminum (Minimum division level 2.1).**

7. **HOTWORK & FIRE WATCHES**:

Contractor shall abide by their Safety Management Program when performing Hot-work. Contractor shall provide sufficient suitable fire extinguishers and a fire watch during any such heating and until the work has cooled. Ship's extinguishers shall **not** be used except in an emergency. Should Contractor have to use ship's extinguishers in an emergency, they shall be recharged and re-certified by a local facility, of CCG's choice, at Contractor's cost.

8. **SERVICE CONDITIONS:**

Unless specified otherwise, all components, materials and installations supplied by or carried out by Contractor shall be adequate to meet the following service conditions:

In areas that are exposed to the elements:

- outside air temperature of minus (-) 40 C to plus (+) 35 C;
- wind velocity of 50 knots;
- water temperature of minus (-) 2 C to plus (+) 30 C;
- shock loading of 2.5g horizontal, 1.5g vertical.

All new components, materials and installations within the ship shall be adequate to withstand the specified shock loading accelerations.

9. **SECURITY WATCHES:**

During the contract period, Contractor shall provide and maintain a continuous, 24 hour-per-day, 7 day-per-week security watch consisting of at least one (1) mobile security patroller. The patrollers are to provide mobile safety and security checks throughout the vessel. The patrols shall be adequate to ensure integrity against personal injury, fire and flood in accordance with Part II of the Canada Labour Code, as well as to ensure that the ship remains free from damage and/or theft resulting from unauthorized entry or activity.

10. **TURNOVER:**

The turnover of the ship to and from Contractor shall be carried out on a compartment-by-compartment basis with a Contractor's Representative, a PWGSC Representative and Captain (or Representative) in attendance.

As part of the initial turnover, digital photographs will be taken by the Owner's Representative with Contractor Representative in attendance consisting of a minimum of four photographs per space. CD copies of the photographs will be distributed to Contractor, CCG Representative and the PWGSC Inspector and shall be accepted as representative of the condition of the vessel at turnover.

On completion of the photographic survey and compartment inspections, Chief Engineer shall provide Contractor's Representative with keys as required for access to all areas of the ship's interior spaces. Turnover to Contractor shall be finalized by completion of an "Assumption of Custody Certificate" to be supplied by PWGSC.

When custody is returned to CCG, a "Resumption of Custody Certificate" shall be completed after completion of a second compartment inspection survey and return of all keys to Chief Engineer.

Contractor shall be responsible to coordinate a safe transfer of the ship between its pre/post-docking berth and its docking blocks. During docking and undocking of the ship, radio contact shall be maintained between the vessel's Commanding Officer and the Contractor's Docking Officer if the vessel is crewed at these times. If the ship is unmanned at the docking and undocking, the safe movement of the ship shall be the sole responsibility of the Contractor.

11. **ENCLOSURES AND HEATING:**

Contractor shall provide all enclosures and heating required to carry out all the scheduled work, taking into account the nature of the work, the time of year the refit is, and the weather conditions for that time of year in Contractor's geographic area. Examples of where heating and enclosures could be required include but are not limited to painting, Potable Water coating, and tank cleaning.

12. **RELOCATIONS:**

Any piping, manholes, parts and/or equipment requiring temporary relocation to carry out specified work, or to gain access, shall be refitted upon completion with new jointing, anti-seize compound, clamps and brackets as applicable (Contractor supply). All equipment and systems, so disturbed, shall be tested to prove correct function and fluid integrity upon completion. Defects shall be corrected at Contractor's cost. **NOTE:** It is Contractor's responsibility to identify equipment and systems that shall be tested to verify correct function, prior to being disturbed for required work.

GENERAL NOTES

13. **HOTWORK VENTILATION AND CONTAINMENT:**

During all known work and work arising that involve hotwork Contractor shall ensure that all dust, debris, gas and smoke generated by the work is evacuated from the vessel by the most direct method possible.

Each item that involves hotwork shall have a defined zone which shall be kept sealed off from the rest of the vessel during the complete work period that involves the generation of welding gases, smoke, and grinding dust etc. These zones shall be indicated in the items contained within the known work package. All extra work arising where hotwork is involved shall have a zone determined using the same logic. The zone shall be limited to the space(s) where the hotwork is being done, boundary areas where fire watches are required, and the access routes between the zone and the exterior of the vessel for workers, welding and cutting equipment and ventilation ductwork.

In areas where accommodations and or workplaces cannot be completely isolated from personal access a double sealed door (air lock) arrangement shall be erected to minimize ingress of the contaminants into occupied areas. A ventilation extraction point shall be located as near as practical to the inside door on the worksite side to reduce the egress into the air lock and subsequently the accommodations and/or workspaces.

All doorways within the affected area that are not being worked or require access for fire watch activities shall be sealed off to prevent all containments from getting in. Passageway branches that connect to the zone shall be sealed off. Contractor shall completely clean all surfaces and fabrics within a compartment that are not suitably protected.

14. **LIGHTING:**

Temporary lighting and/or temporary ventilation required by Contractor to carry out any item of this specification shall be supplied, installed and maintained in safe working condition by Contractor and removed on completion of the related work. Naked light bulbs or tubes shall not to be used as temporary lighting inside the vessel. All lights used in the vessel shall be supplied with approved guards.

15. **CLEANUP:**

Contractor shall ensure that all spaces, compartments, and areas where work has been carried out, or Shipyard staff has used for transit routes, are left in "**as clean a condition as found"** when the vessel commenced refit. All rags, debris, and associated garbage generated by the shipyard staff while on board shall be removed to the garbage container(s) each day. The costs associated with the removal of dirt, debris, and garbage shall be included in the quote.

16. **INSPECTION:**

Contractor shall be responsible for calling in the services of TCMSB, PWGSC and HC Inspectors when and as required for survey and inspection items. All TCMSB surveyors called in by Contractor are to sign- off the Chief Engineer's Inspection Log Book for all items surveyed.

GENERAL NOTES

17. **CORRESPONSANCE & REPORTS:**

Unless otherwise agreed upon, all correspondence with CCG vessel maintenance personnel shall be in English. All reports shall be typewritten, and provided in **English**. Duplicate copies may be submitted in French. All reports shall be completed in a timely manner and provided to the Chief Engineer immediately following their completion, and shall continue as required throughout each component's respective specification of work. Upon delivery of the vessel, a compilation of all reports and correspondence shall be provided on a CD or DVD to Vessel Maintenance Manager.

18. **PAINTING:**

Unless specified otherwise, replacement and/or disturbed steelwork shall be given a minimum of two (2) coats of Intershield 300 Aluminum Pure Epoxy, each coat to be of contrasting colour. **Lead-based paints shall not be used under any circumstance.** Prior to painting, all new and disturbed steelwork shall be power tool cleaned to SSPC.SP3 standard as a minimum standard of surface preparation. An independent NACE inspector shall be subcontracted to inspect and certify all aspects of paint preparation and coating application laid out in this specification. This NACE inspector shall be used for paint work both inside the vessel and on outer hull and deck surfaces. Contractor shall include in their bid a $10,000 allowance for this inspector, which is to be adjusted by PWGSC 1379 action upon final invoicing.

19. **MATERIALS & TOOLS:**

All materials, unless otherwise specified, shall be supplied by the Contractor. Contractor is to supply all necessary tools and equipment to perform the specified work. Special, ship-specific tools, as required, will be issued by and returned to Chief Engineer. Contractor shall be responsible for removing the tools from their stored location aboard the vessel, and returning them and securing them in place when finished. Otherwise, ship's tools and equipment will not be available for Contractor's use.

20. **MEASUREMENTS:**

All dimensional measurements shall be taken and recorded in inches. Unless otherwise specified, the dimensions shall be taken and reported in thousandths of an inch (0.000"). All measuring devices shall be described on the submitted reporting sheets. All reported dimensions shall be either typed or printed in a neat legible manner, and shall include the name of the person who took the readings.

21. **CO-OPERATION:**

During the period that the ship is in refit, members of the ship's complement, Coast Guard technical staff, and service specialists may be carrying out repairs to, maintenance of, or modifications of various ships' equipment not covered in this specification. Contractor shall not deny access to the vessel to these persons. Every effort will be taken to ensure that this Coast Guard controlled work will not interfere or conflict with that being carried out by Contractor.

22. **SMOKING:**

The Public Service Smoking Policy forbids smoking in Government ships in all areas inside the ship where shipyard personnel will be working. Contractor shall inform workers of this policy and ensure that it is complied with in all cases.

GENERAL NOTES

23. **ACCESS:**

The following areas are out of bounds to Contractor's personnel except to perform work as required by the specifications: all cabins, offices, workshops, Wheelhouse, Control Room, public washrooms, Officers' and Crew's Messes and Lounges. Contractor s shall ensure that no workers bring meals onboard the ship.

24. **INSPECTION & GUIDANCE**:

During this contract, Ship's Crew and Regional Staff will be onboard conducting inspections and providing guidance to Contractor personnel.

25. **ASBESTOS:**

There may be locations having asbestos containing materials (ACM). The latest Asbestos Assessment Report is available upon request.

SERVICES

1. **GENERAL:**

All services as described in this section shall be supplied, fitted and/or connected upon formal handover to Contractor, maintained throughout the period that the ship is under Contractor's control, and removed upon return to CCG Custody.

Contractor shall supply all material to point of onboard connection and all cranes/scaffolding required for connection/disconnection. Contractor shall be responsible for any additional disconnections and re-connections required if and when the ship is moved between dock, slipway and any berth at Contractor's premises.

2. **CARE AND CUSTODY:**

During the contract period, the ship shall be placed in the custody of Contractor who shall be responsible for all safety and security matters pertaining to the vessel. As the ship will not be de-stored, Contractor shall provide security arrangements as required to safeguard CCG and DFO equipment and material that remain onboard during the contract period.

3. **PRICES:**

Contractor shall quote a global price and daily or unit cost rates for all services supplied to the vessel during the refit period.

4. **BERTHAGE:**

During refit, while not in dry- dock, the vessel shall be berthed at the Contractor's wharf at a safe and secure berth with adequate water at extreme low tide to ensure that the vessel will not touch bottom. The Contractor shall include in quote all costs for initial tying up, any movement of the vessel during refit and slipping of lines from Contractor's wharf on departure of vessel from yard upon completion of the refit.

5. **GANGWAYS:**

Contractor shall supply and install two (2) gangways complete with safety net, while the ship is on the dock or slipway or at berth. Gangways, complete with safety nets, one of the two gangways shall be installed in such a manner that they provide separate routes for escape in the event of fire. Chief Engineer shall advise of specific locations.

Safety nets shall be in compliance with the Canada Labour Code. Gangways shall be safe, well lit and structurally suitable for the passage of shipyard personnel and the ship's crew. Contractor shall maintain gangways in a safe condition throughout the duration of the refit while the ship is out of the water.

Initial installation and later removal of gangways shall be included in quote, as well as maintenance and upkeep while vessel is in Contractor's yard. Any movement of gangway(s) required by Contractor shall be at Contractor’s cost.

6. **ELECTRICAL POWER:**

Contractor shall connect and quote on supplying electrical power on one (1) service at 460 VAC, 3 PH, 60 Hz at 200 Amp rating upon ship's arrival at Contractor's facilities. The ship’s shore power shall not be used. The cost of all required connections and disconnections shall be included in the quote.

The cost of all required connections and disconnections shall be included in the quote. Contractor shall bid on the supply of 3000 kWh per day for refit period, plus a unit kWh rate for adjustment purposes. Final costs shall be pro-rated up or down by PWGSC 1379 based on actual consumption as indicated by vessel's kWh meter. The power meter shall be read and recorded by the Chief Engineer and Contractor's Representative together at the start and end of the contract period.

If no kW consumption meter is available, a daily consumption (amps) shall be negotiated and power requirement determined by the following formula:

kWh = I X E X P.F. X 1.73 X 24/1000

7. **STAGING & CRANAGE:**

Contractor shall provide all necessary staging, shoring, and rigging that will be required to carry out all specified work as well as the transportation of all materials that are required. All staging and rigging shall be removed from the vessel on completion of work. Bidders shall allow 5 lifts in the bid for cranage, for loading and unloading ships stores.

In addition, Contractor shall quote an hourly rate for cranage, and a per lift rate. This rate shall include the crane, operator and all other required personnel. Final cost shall be increased or decreased to suit actual usage at refit completion via PWGSC 1379 action.

8. **POTABLE & SANITARY WATER:**

Potable fresh and sanitary water at 415 kPa (60 PSI) constant pressure shall be connected to the ship's system. Connection is to be complete with pressure regulator and shut-off valves, and attached at the ship's fresh water filling connection located on the fwd. starboard side corner of the Trawl deck. Approximately 350 cubic meters shall be supplied for duration of the contract by the contractor. This volume of water shall NOT be used for the flushing and filling of the freshwater tanks by the contractor as per the fresh water tank specifications.

Contractor shall also supply and connected a water meter to the ship’s inlet line.

Contractor shall quote a unit rate for PWGSC 1379 adjustments, and include all connection / disconnection costs in bid price.

Contractor shall make arrangements to prevent the potable water supply piping/hoses are protected against freezing.

Contractor shall provide to Chief Engineer at the Pre-Refit Meeting a certificate of potable water quality before water service is connected to the vessel with a current date of testing and its’ source.

9. **WASTE MANAGEMENT:**

A garbage dumpster/container shall be provided on the Well Deck for ship’s garbage only. Refuse shall be removed daily from the ship; quotation shall indicate a per-diem charge for garbage removal only.

Provisions shall be made for any recycling mandated by local authorities; any receptacles specifically required to meet these requirements shall be provided by the Contractor at no cost; the Contractor shall quote removal costs only. The Contractor shall also quote on removal costs (per unit volume/quantity) for:

- Newsprint/bond paper
- Corrugated cardboard
- Beverage containers

10. **FIRE MAIN:**

During the dry-docking period only, Contractor shall provide shore water connections to ship's 2½" diameter fire main, at a minimum pressure of 415 kPa (60 PSI). Two independent & separate connections shall be supplied at extremities of the vessel, as directed by the Owner's representative.

A pressure-reducing valve with pressure gauge shall be fitted before the connection valve at the Contractor's hydrant. The Contractor shall ensure that there is no interruption of service to the ship's fire main at any time.

11. **PROTECTION:**

Contractor shall supply and fit 1/8" inch (3 mm) thick Masonite to protect the ship's interior decks for the duration of the refit. Placement of Masonite shall be as directed by the Owner's representative. At a minimum, the areas that shall be protected will include all interior passageways and stairs, the Control Lab, the Bridge, and the Chief Engineer's Cabin. It shall also include decking and stair treads in the corresponding sections of the stair tower, and the lower 125cm of all bulkheads.

Contractor shall bid on supplying and installing 1000m^2 and provide unit cost for the supply and installation per m^2. All seams and edges shall be duct taped in place to prevent movement of the sheets and the ingress of dirt. Upon completion of all work, the Contractor shall remove all Masonite and clean the areas that were covered by the Masonite.

Bulkheads and deckheads in the accommodation areas shall be protected where temporary services are run or where there is a possibility of damage as a result of the performance of contracted work.

12. **TELEPHONE SERVICE:**

Two independent and private telephone lines shall be supplied and connected to the ship's integrated communications system. The cost of connection, unlimited local service and removal shall be included in bid price. All telephones shall be active 24 hours a day for the duration of the contract, and shall have long distance dialing capabilities. The cost of long-distance calls shall be dealt with using PWGSC 1379 action. Contractor shall be responsible for giving notice for connection/disconnection times to the Telephone Company as required for any ship movements during the dry-docking period.

Contractor shall supply a listing of shipyard contacts, fire, police and emergency telephone numbers to Chief Engineer when vessel arrives at Contractor's facilities. Contractor shall ensure

the Chief Engineer is notified of any "on call personnel" and their contacts during non-working hours and days.

13. **FLUIDS REMOVAL**

Contractor shall bid on the removal and disposal, in accordance with provincial requirements, of 10,000 litres of oily water mixtures from the ship's waste oil tanks and bilges. Also quote unit cost per each additional removal and disposal of 2,500 litres.

Contractor is responsible for the disposal of all grey and black water according to provincial regulations.

14. **COOLING WATER:**

Contractor shall provide a 30 psi SW or FW cooling for the duration of the refit for the auxiliary machinery cooling. Contractor may use the temporary fire main supply as a feed for the sea water or fresh water. Approximately 75 cubic metres of water per day shall be supplied via the cooling water supply connection.

15. **OVERBOARD DISCHARGE:**

Connections shall be made to the black and grey water overboard discharge hull penetrations, and directed to suitable drains.

Contractor shall include the cost of disposal for 5 cubic meters per day and provide a unit cost per cubic meter for adjustment purposes.

These connections shall be maintained for the duration of the vessel's docking period. Arrangements shall be made to prevent the freeze up of these drains. Contractor s shall include the cost of all connections and disconnections in their quotations, and quote a daily rate for PWGSC 1379 adjustment purposes.

16. **CLEANING:**

Contractor shall ensure that all spaces, compartments and areas of the ship where work has been carried out, or Shipyard staff has used for transit routes, are "as clean as found" when work is completed. The cost of clean-up work shall be included in the quote for each specification item.

17. **PARKING:**

Sufficient parking for DFO/CCG and PWGSC representatives shall be provided conveniently close to the berthed or docked vessel. Contractor shall provide three (3) clearly designated "for DFO/CCG and PWGSC use only" parking spaces for the duration of the docking period.

3 – Production Chart & Subcontractors Allowances

1: SCOPE:

The intent of this specification shall be to provide a means for tracking the overall progress of the refit.

2: TECHNICAL DESCRIPTION:

2.1 General

1. Contractor shall supply three copies of a detailed Gantt chart showing the planned work schedule for the ship's refit.
2. This bar chart shall show, for each specification item, the start date, the manpower loading, the duration and the completion date. The chart shall also highlight any critical paths.
3. The production chart shall be updated weekly and for each production meeting to reflect the actual production on the refit and changes to the anticipated completion dates of each individual item.
4. The production chart shall clearly indicate the arrival/departure dates of any Subcontractors/Field Service Representatives.
5. The production chart shall include the status and production on each 1379 arising.
6. Three copies of the production chart shall be given to the Chief Engineer the day prior to each Production Meeting. A copy shall be emailed to the Vessel Maintenance Manager (VMM), Todd Smith (todd.smith@dfo-mpo.gc.ca) the day prior as well.
7. A copy of the original bar chart shall be provided via email to the PWGSC contracting Officer and VMM before the close of business on the day of the ships arrival at the Contractors premises.
8. The results shall be tabulated in an excel spreadsheet clearly indicating the Subcontractor, date(s), hours worked and hourly rate for the hours worked.
9. The update is to be emailed to, PWGSC Contracting Officer and VMM the day prior to the weekly scheduled Progress Meeting.

2.2 Location

N/A

2.3 Interferences

N/A

3: REFERENCES:

3.1 Guidance Drawings/Nameplate Data

N/A

3.2 Standards and Regulations

N/A

3.4 Owner Furnished Equipment

N/A

4: PROOF OF PERFORMANCE:

4.1 Inspection

N/A

4.2 Testing

N/A

4.3 Certification

N/A

5: DELIVERABLES:

5.1 Reports, Drawings, and Manuals

1. Contractor shall provide a weekly production chart and excel spreadsheet for subcontractor allowances every week on the timelines indicated.

5.2 Spares

N/A

5.3Training

N/A

HD-01 – Docking & Undocking

1: SCOPE:

The intent of this specification item is to dock the ship in a safe and timely manner while providing access to all work areas required by other specifications of this refit.

2: TECHNICAL DESCRIPTION:

2.1 General

1. Contractor shall refer to the vessel's Docking Plan included in the bid package.

   VESSEL PARTICULARS:
   Length, Overall: 165.00'
   Length, Between Perpendiculars: 144.67'
   Breadth, Moulded: 36'
   Depth, Moulded: 14.75'
   Rake of Keel: 3.90'
   Mean Draft, Extreme: 13.20'
   Displacement, Extreme: 1123 L. Tons
   Gross Tonnage: 925.03

2. Dry docking shall be under the direct supervision of a Certified Docking Master. Prior to docking the vessel, Contractor shall present to Canadian Coast Guard their plan to effect a safe docking. This will include, but not be limited to, an explanation of block loading, dock preparation, tide-wind-tug issues, manpower arrangements and communications. Contractor shall provide reasonable notice to CCG prior to undocking the vessel and make similar presentations regarding safe undocking and for the vessel's on dock period. Vessel's crew will be present for scheduled docking and undocking.

3. Vessel shall be docked such that all docking plugs, transducers, anodes and sea inlet grids are clear and accessible. Contractor shall note that CCGS ALFRED NEEDLER has a Bar Keel, as well as Bilge Keels P&S. Contractor shall ensure blocks are installed in such a manner as to avoid damage to these structures.

4. Contractor's Docking Master shall note the position of all equipment noted above, and ensure the keel blocks are arranged in such a manner as to avoid damage or obstruction. If any hull fittings are covered or damaged, Contractor shall be responsible for all labour and materials required for making corrective action.

5. At least one week prior to the vessel's arrival at Contractor's facility, Contractor shall provide CG TA with trim requirements for successful docking.

6. Contractor shall supply the services of divers to confirm that the vessel is setting evenly on the bilge and keel blocks.

7. Contractor shall quote a unit daily service day cost on dock. This cost shall form part of the overall quote. This quote shall include any tug and/or pilotage service cost.

8. Docking shall be undertaken during the first day of refit. If necessary, Contractor shall prepare the dock in advance of the ship's arrival and the official start date of the contract period. If premium time is required for evening shifts or weekend work to meet this objective, Contractor shall identify this and include all costs in their quotation.

9. Ship's personnel will be responsible for line handling aboard the vessel only during the docking and undocking operations. Contractor shall supply personnel on the tug and dock walls and ashore for all line handling.

10. A minimum clearance of four feet (4') shall be available between the keel and the dock floor.

11. Vessel shall not share a dry dock with any other ship for any part of the contract period in such a way that will interfere with its scheduled re-floating.

12. Contractor shall prepare blocks and necessary shoring to maintain true alignment of vessel's hull and machinery throughout the dry-docking period. Contractor shall dock and undock vessel and allow sufficient time to complete both the work described in this specification as well as a margin of time to cover work arising.

13. Contractor shall be responsible for the safe transfer of the ship between its pre/post-docking berth and its docking blocks. During docking of the ship, radio contact shall be maintained between the vessel's Commanding Officer and Contractor's Docking Officer. Contractors shall include, but show separately, the price of any tug and/or pilot services required.

14. Adequate and safe access to the vessel shall be provided, complete with safety nets and rails, throughout the docking period.

15. Within two (2) hours of docking completion, Contractor shall commence cleaning the ship's entire hull and appendages by high-pressure fresh water jetting to remove all salt deposits and marine growth (Class 1: 10,000 to 25,000 psi maximum for growth removal). This work is required to be completed as soon as possible in preparation for initial hull inspection by CG TA.

TANK SOUNDINGS

16. Prior to docking, all tanks will be sounded and the contents recorded.

    a. Prior to undocking all tanks will be returned to the same levels as at the time of the original docking. When this has been completed, the tanks shall be sounded and recorded.

    b. In each case, a Ship Condition Report shall be prepared by Contractor and signed-off by Commanding Officer (or his representative), Chief Engineer and Contractor's Docking Master. In each case, two (2) copies of the signed-off Ship Condition Report shall be given to Chief Engineer, and one (1) copy shall be given to the PWGSC Inspector.

    c. During the docking period all fluid movements will be noted and recorded. This record will be kept by Chief Engineer, and signed by Chief Engineer and a representative of the Contractor as events occur. At all times, Contractor shall give Chief Engineer a minimum of four (4) hours' notice of movement of fluids to/from ship's tanks.

17. Contractor shall be responsible to remove or relocate any items of ship's gear that are required to be moved or removed to obtain the necessary displacement, draft or trim to suit his facilities during docking or undocking. Contractor shall be responsible for the safekeeping of all removed and relocated items. All items shall be refitted in their original locations after vessel has been undocked.

18. TRANSDUCER FACES: All transducer faces shall be suitably protected from damage during the entire docking period unless they are being worked on. Prior to re-floating, all transducers shall be washed off with a mild liquid detergent & water solution to rid them of all contaminants and marine growth. After washing they shall be rinsed with clean fresh water to remove all soap residues.

19. Contractor shall note that DFO/CCG technical staff may be required to work on the transducers during the refit. Chief Engineer will coordinate activities to see that Contractor is not inconvenienced by the activities of DFO/CCG personnel.

20. Upon completion of work, vessel shall be undocked and moved to a safe berth.

21. Vessel will require tugs for this movement. Contractor shall include all costs for this safe transfer in thier bid.

2.2 Location

N/A

2.3 Interferences

N/A

3: REFERENCES:

3.1 Guidance Drawings/Nameplate Data

1. Drawing # 24-01 – Docking Plan
2. Drawing # 181/01 – Location of Sacrificial Anodes

3.2 Standards and Regulations

N/A

3.3 Owner Furnished Equipment

N/A

4: PROOF OF PERFORMANCE:

4.1 Inspection

N/A

4.2 Testing

N/A

4.3 Certification
N/A

5: DELIVERABLES:

5.1 Reports, Drawings, and Manuals
Docking plan placement of blocks

5.2 Spares
N/A

5.3Training
N/A

HD-02 – Butts & Seams

1: SCOPE:

In conjunction with specification items **HD-01 Docking and Undocking** and **HD-03 Underwater Hull Painting**, the entire hull will be given an inspection by Coast Guard Technical Authority (CG TA) and attending Transport Canada Marine Safety Bureau (TCMSB) Inspector.

2: TECHNICAL DESCRIPTION:

2.1 General

1. Contractor shall be responsible for all inspections and shall consult with TCMSB, prior to commencement of work, to determine an inspection schedule. At each inspection point, Contractor shall advise CGTA, in advance, to allow his/her attendance.

2. Any required staging shall be covered under section **HD-03 Underwater Hull Painting**. Areas requiring detailed examination shall be determined at the time of initial inspection by TCMSB. In lieu of staging, Contractor may provide the use of a certified man-lift (with operator) for the duration of inspection and repairs, as required.

3. Seams and butts selected for repair shall be marked, cleaned to sound metal by air arc gouging or grinding, and brought up to original level by TCMSB approved welding techniques and materials. Contractor shall use welding rods suitable for use with GRADE 'A' steel. All work shall be completed to approval of TCMSB and CG TA.

4. Contractor shall quote on preparation and welding 200 linear feet for butt and seam repairs on ship's hull. Each linear foot to be repaired shall be quoted as being adequately gouged out, and receive five passes on Grade "A" steel, using 5/32" rod, for a total of 1,000 linear feet of weld. This quote shall include any staging or man lifts required for the repairs.

5. Contractor shall provide a quotation per linear foot of gouging and welding as defined above, including any staging or man lifts required for the repairs. This combined unit cost shall be used for PWGSC 1379 adjustment upon matching the total amount of repair welds performed for this specification.

6. Any gas-freeing, certification as Gas Free, personnel Safe for Entry, fuel residue removal and Safe for Hot Work required in a tank that will not be otherwise accessed during this refit shall be by PWGSC 1379 action.

7. Contractor <u>shall not apply any underwater hull coatings</u> until TCMSB inspector has completed the required inspection and repairs are completed. Contractor shall notify CG TA and TCMSB Inspector prior to the application of any coatings.

2.2 Location

1. Underwater Hull

2.3 Interferences

1. No known interferences. It is Contractor's responsibility to identify any interference items for the known scope of work during the vessel's bidder's meeting.

3: REFERENCES:

3.1 Guidance Drawings/Nameplate Data

1. Drawing # 108-01 - Shell Expansion & Framing

3.2 Standards and Regulations

1. Welding Standards as defined in General Notes

3.3 Owner Furnished Equipment

N/A

4: PROOF OF PERFORMANCE:

4.1 Inspection

1. All work shall be carried out to the satisfaction of CG TA and attending TCMSB Inspector.

4.2 Testing

1. Contractor shall include the cost of 10 non-destructive tests on the new welds; these tests shall be as directed by attending TCMSB Inspector. Contractor shall provide a unit cost for each additional x-ray and the cost shall include all expenses for NDT testing company.

4.3 Certification

1. Contractor shall contact TCMSB and arrange for all required inspections in order to grant a credit for Division 3 survey item 3LL040.

5: DELIVERABLES:

5.1 Reports, Drawings, and Manuals

1. A computer generated report shall be provided in digital format to CG TA. This report shall include a listing of all welds performed, number of passes and locations, and results of all tests performed.

5.2 Spares

N/A

5.3Training

N/A

HD-03 – Underwater Hull Painting

1: SCOPE:

The intent of this specification is to clean the ship's underwater hull, properly prepare the surfaces, and recoat as necessary with specified marine coatings. This work shall be carried out in conjunction with all other dry-docking items.

2: TECHNICAL DESCRIPTION:

2.1 General

1. As noted in Section 2.1, paragraph 16 of Specification Item **HD-01 Docking & Undocking**, Contractor shall clean the ship's entire hull and appendages by high-pressure fresh water jetting to remove all salt deposits and marine growth (Class 1: 10,000 to 25,000 psi maximum for growth removal). **NOTE:** This item is not to be quoted twice.

2. Hull painting shall extend from the underside of the keel to a level line that is 15'-4" above it at mid-ships. Including the centerline skeg, propeller nozzle and rudder, the hull area to this level is calculated to be 8,100 square feet (ft^2).

3. After completion of cleaning, the underwater hull area is to be inspected for loose paint and bare areas, and Contractor is to arrange for TCMSB to survey the hull.

4. Contractor shall include an allowance of $10,000 to cover expenses of an International Paint Representative (FSR). The FSR shall be reimbursed by the Contractor from this allowance for their services, authorized travel, and living expenses reasonably and properly incurred in the performance of this work. This allowance shall form part of the overall bid and shall be adjusted by PWGSC 1379 action upon proof of final invoice.

5. All hull-mounted equipment such as anodes, echo sounders, speed log, transducers, etc. shall be suitably protected against damage during cleaning of the hull and application of the coatings. The Contractor shall be responsible for repair/replacement of any such damaged items.

6. The Contractor shall take measures to ensure that no damage, unnecessary cleaning or repairs, accrue from the sand or grit blasting and/or the application of coatings. Grit used for blast cleaning shall not be permitted to enter into any part of the vessel or its equipment. Contractor shall ensure that each and every opening into the vessel where sand or grit may gain ingress and cause damage shall be suitably protected. Any cleaning required due to failure to comply will be at Contractors expense.

7. Measures shall also be taken to ensure that application of coatings does not take place to surfaces or equipment other than those areas specified, and that any inlets or discharges in the shell shall not be blocked by the coating. All deck machinery shall be protected against grit, dust and coatings.

8. The Contractor shall plug deck scuppers and discharges or take any measures necessary to prevent water or other liquids from contaminating the areas of plating being coated or prepared for coating.

HD-03 – Underwater Hull Painting

9. All hull areas containing loose paint and/or bared steel shall be abrasive blasted to bare steel (SSPC-SP10). Edges of intact paint shall be feathered back to a minimum of 150 mm, and blown clean with compressed air. The surface profile shall have a minimum roughness of 3 mils (75 microns).

10. All shell areas containing intact coatings are to have the present antifouling system removed and the underlying epoxy shall be profiled by sweep blasting for subsequent application of new coatings. All prepared surfaces are to be blown clean with compressed air.

11. Contractors shall bid on abrasive blasting to bare steel and re-coating 50% of the underwater hull up to the 15.33 ft. waterline (4,050 ft^2). For adjustment purposes, Contractors shall provide a unit rate for blasting to bare steel and painting underwater hull surfaces.

12. The remainder of the underwater hull (4,050 ft^2) shall be prepared as described in paragraph 13. For adjustment purposes, Contractor shall provide a unit rate for sweep blasting and painting intact coating areas of the underwater hull.

13. All underwater hull surfaces are to be degreased by solvent cleaning to SSPC-SP1 standard prior to application of coatings.

14. Upon completion of the specified surface preparations, the affected areas are to be surveyed by the International Paints FSR and the Chief Engineer. The surface areas of bared steel and intact coatings are to be agreed upon, recorded by the Contractor and signed-off by all parties with copies of the document for each.

15. The Contractor is to "cut-in" a straight line of paint at the top of the underwater hull coatings and is to prevent overspray of these coatings onto the above water hull area.

16. Application of underwater hull coatings are to be as follows:

    First coat: Contractor to quote on applying one (1) coat of "INTERSHIELD ENA 300V", abrasion resistant epoxy, aluminum, at 125 microns D.F.T. to bared steel areas.

    Second coat: Contractor to quote on applying one (1) coat of "INTERSHIELD ENA 300V" abrasion resistant epoxy, bronze, at 125 microns D.F.T. to bared steel areas.

    Third coat: Contractor to quote on applying one (1) coat of "INTERGARD 263" epoxy tie coat, light gray, at 100 microns D.F.T. to the entire underwater hull area as described in this Specification Item.

    Fourth coat: Contractor to quote on applying one (1) coat of "INTERSPEED BRA 640" TIN-FREE ANTIFOULING, RED, at 125 microns D.F.T. to the entire underwater hull area as described in this Specification Item.

17. New coatings are to be applied in full compliance with manufacturer's requirements to provide a finished coat of no less than 475 microns D.F.T. overall. Any shelters and heating required to meet the coating manufacturer's specifications are to be supplied by the Contractor and included in the bid price.

18. All draught marks, load line marks, and other underwater hull markings (e.g.: Transverse Bulkhead Frame Numbers) are to be given a coat of white paint, INTERFINE 979 or equal.

19. Contractor shall remove from the vessel all traces of sand and/or grit used for blast cleaning. Contractor shall be responsible and liable for ensuring that the hull is clear and clean, prior to, during and immediately after the application of coatings.

20. After completion of all specified hull preparation and coating, as well as all other work specified in way of sea intakes, intake grid securing screw holes are to be tapped out and grids are to be reinstalled. Securing screws are to be tack welded in place as per original arrangement. Contractor to quote separately cost of replacing, with new, sixty (60) grid securing screws, if required. Screws are "UNC X 3 1/2" stainless steel slotted, flat head machine screws.

21. New coatings shall be applied with atmospheric and steel conditions acceptable to paint manufacturer and Chief Engineer. Application conditions shall be recorded by Contractor and/or paint manufacturer's representative for inclusion in Report to be submitted to Chief Engineer

2.2 Location

1. Underwater Hull

2.3 Interferences

1. No known interferences. It is Contractor's responsibility to identify any interference items for the known scope of work during the vessel's bidder's meeting.

3: REFERENCES:

3.1 Guidance Drawings/Nameplate Data

1. Drawing # 108-01 - Shell Expansion & Framing
2. Recommended FSR: Nicole Hart, Technical Sales
   AkzoNobel Coatings, Ltd.
   (902) 468-1401
   nicole.hart@akzonobel.com

3.2 Standards and Regulations

1. Contractor to be responsible and liable for ensuring that the hull is clear and clean prior to, during, and immediately after the coating application.
2. Suitable storage facilities shall be provided close to the work site for the material and equipment, to ensure they will be maintained at the recommended temperature of the coating manufacturer for ease of preparation and proper application.

3.3 Owner Furnished Equipment

1. All staging, cranage, screens, lighting and any other support services, equipment, paint and materials necessary to carry out these specifications shall be Contractor-supplied. If, due to steel and air temperature, enclosures and forced air heaters are required, the Contractor shall allow $15,000 to supply and install/remove, which will be adjusted up or down by 1379 action.

2. Unless otherwise specified, all labour, materials, and equipment required to complete all tasks required in this specification shall be Contractor supplied.

4: PROOF OF PERFORMANCE:

4.1 Inspection

1. Contractor shall follow the inspection regime outlined in General Notes, and provide documentation to support all inspections and tests performed.

4.2 Testing

1. Contractor and/or paint manufacturer's representative shall take sixty (60) wet film thickness measurements; thirty (30) per side, in areas where hull has been cleaned to bare steel. The measurements shall be witnessed by the PWGSC Inspector and recorded with locations referenced to the attached shell expansion drawing. Unwitnessed measurements shall not be accepted.
2. Using a calibrated DFT gauge, fifteen (15) measurements per 100 square ft. shall be taken and recorded, at an agreed upon consistency with the Chief Engineer.

4.3 Certification

1. Contractor shall provide certification for all hull coatings applied.

5: DELIVERABLES:

5.1 Reports, Drawings, and Manuals

1. Contractor shall maintain a Quality Assurance reporting program, which shall at minimum include the following points:
    a. Which areas were blasted and indicate the blast media type and air pressure
    b. Which areas were coated, with what product, and the volume of coating used.
    c. Provide a list of batch numbers with corresponding dates of manufacture.
    d. Record the quantity and type of any solvent added.
    e. Measure and record all ambient conditions (Temperature, Humidity, Barometric pressure).
    f. Hull temperature
    g. Record all details of spray tips and pressures.
    h. All WFT and DFT readings taken as prescribed in section 4.2 of this specification.
2. All recorded information shall be typewritten in English and three (3) copies shall be given to the Chief Engineer.

5.2 Spares

N/A

5.3Training

N/A

HD-04 – Hull Anodes

1: SCOPE:

The intent of this specification item is to renew ship's underwater hull sacrificial anodes.

2: TECHNICAL DESCRIPTION:

2.1 General

1. Contractor shall supply and install sixty-three (63) sacrificial hull anodes with 22 lb. pure zinc anodes (Z-22). Contractor shall also quote a unit price to renew one (1) anode for 1379 PWGSC adjustment purposes.

2. Contractor is responsible for supplying any staging or cranage required to gain access to all anodes.

3. Any anodes deemed by CG TA not needing renewal, shall be temporarily protected from new hull coating applications. These anodes shall be recorded by Contractor and updated on reference drawing 181/01 Position of Sacrificial Anodes.

4. Replacement anodes shall be placed in the same location as removed anodes using the same securing arrangements.

5. Two anodes located on hull Port side, underneath CTD winch boom shall be removed and secured to hull in an area where they will not interfere with future deployment/recovery of CTD rosette.

6. Areas of weld, where old anodes were, shall be ground smooth prior to installation of replacement anodes and application of hull coatings.

7. All welds used for new securing straps shall be dressed smooth of all slag and spatter prior to surface preparation and touch-up coatings.

8. New anode securing straps shall be primed and painted with the same coatings as outline in specification item **HD-03 Underwater Hull Painting**.

9. All sacrificial anodes and securing straps shall be effectively protected while the underwater hull is being blasted and painted. Protective materials shall be removed upon completion of painting.

10. All work shall be completed to satisfaction of CG TA.

2.2 Location

1. Underwater Hull

2.3 Interferences

1. Contractor is responsible for the identification of any interference items, their temporary removal and storage and refitting to the vessel.
2. Contractor is responsible for protecting surrounding area and equipment while carrying out this work.

HD-04 – Hull Anodes

3: REFERENCES:

3.1 Guidance Drawings/Nameplate Data

1. Drawing 181/01 Position of Sacrificial Anodes

3.2 Standards and Regulations

1. Welding Standards as defined in General Notes section of Specification.

3.4 Owner Furnished Equipment

N/A

4: PROOF OF PERFORMANCE:

4.1 Inspection

1. Visual inspection by CG TA

4.2 Testing

N/A

4.3 Certification

N/A

5: DELIVERABLES:

4.1 Reports, Drawings, and Manuals

1. Updated reference drawing on how many anodes were changed and their location

5.2 Spares

N/A

5.3Training

N/A

HD-05 – Ballast Tanks

1: SCOPE:

The intent of this specification item shall be to open up the following tanks for cleaning, inspection, testing and to cover the continuous survey for Transport Canada Marine Safety Bureau (TCMSB). These tanks are considered as confined spaces under the Coast Guard's Safety Management System.

2: TECHNICAL DESCRIPTION:

2.1 General

1. Contractor shall provide a method to have all tanks identified gas freed, and certified Safe for Entry for personnel to enter and Safe for Hot Work. Certificates shall be forwarded to CGTA and a copy shall be posted in a conspicuous location near the entrance to each tank.

2. Tanks will be pumped down as low as possible by ship's staff. Approximately eight (8) tonnes total residue will remain in the tanks, which shall be removed and disposed by Contractor. All docking plugs and locking bars for the above tanks shall be removed by Contractor to permit the draining of ballast tanks listed below. All plugs shall be given to Chief Engineer until required for reinstallation. Tanks without docking plugs shall be pumped down by Contractor. Contractor shall supply all pumps, hoses, hardware, and personnel to carry out these operations.

3. Manhole covers shall be removed. Contractor shall provide each tank with a mechanical ventilation/extraction system, vented to outside of the ship. Good ventilation must be provided and any blowers/extractors must ensure good air movement and solvent vapour removal from the lowest point in the tanks. Vapours as well as airborne dust and debris shall not be allowed to enter the vessel.

4. Tanks shall be thoroughly water jet cleaned; all scale, dirt and debris shall be removed ashore and disposed of by Contractor. Cleaning shall be carried out using freshwater hydro blasting at 5,000 psi minimum. Tank internals shall be inspected by CGTA and TCMSB Inspector.

5. After each tank has been hydro blasted, Contractor and CGTA shall enter each tank and agree upon an area to be prepared and painted. The agreed upon area shall be adjusted up or down by PWGSC 1379 action.

6. All rusty and bare areas shall be power tool cleaned to SSPC-SP3 standard, and sufficiently feathered to existing coatings. These areas shall be coated with two coats of Intershield 300 (Bronze) at 11 mil DFT and a final coating of Intershield 300 (Aluminum) of 5 mil DFT.

7. Contractor shall provide a unit cost for preparing and painting one square meter of tank in accordance with paragraph 2.1.6. This per unit cost shall include all equipment, materials, and personnel to complete this task. The evaluated bid shall include 100m^2 per tank based on this unit cost.

8. Contractor shall quote on supply and installation, complete with brackets, M24 sacrificial zinc anodes. Total shall be 10 anodes per each tank in the list below for a total of 30 anodes. Anodes

shall be affixed in locations as per CG TA's instructions. Contractor shall provide a quote for supply and installation of one anode for PWGSC 1379 Adjustment purposes.

9. Contractor shall ensure all debris is removed from each tank. Sounding pipes, suction pipes, and vents shall be proven clear; blockage removals shall be considered unscheduled work.

10. CGTA shall be present when the manhole covers are reinstalled. Contractor shall clean the sealing surfaces around the manhole and cover and install the cover using new o-rings/gaskets. Anti-seizing compound shall be used on all threads. Contractor shall quote separately the unit cost per stud to replace any broken manhole securing studs.

11. Docking plugs and locking bars shall be installed upon completion of draining. Each docking plug shall be installed using new packing. All locking bars shall be welded in placed and adjacent areas shall be power tooled, primed, and painted as per the hull coating requirements.

2.2 Location

FIELD #	TANK	LOCATION	CPTY(m^3)	AREA(m^2)
3L004	#12 Ballast Tk	Frs 49-58 Center	24.51	150
3L012	#14 Ballast Wing Tk	Frs 17-27 Port	32.68	200
3L013	#13 Ballast Wing Tk	Frs 17-27 Stbd	32.68	200

2.3 Interferences

1. Contractor is responsible for the identification of any interference items, their temporary removal and storage and refitting to the vessel.
2. Contractor is responsible for protecting surrounding area and equipment while carrying out this work.

3: REFERENCES:

3.1 Guidance Drawings/Nameplate Data

1. Drawing # 120/004 – Tank Plan
2. Drawing # 532/02 – List of Manholes
3. Drawing # 703/04 – Manhole Cover

3.2 Standards and Regulations

1. The following Coast Guard Standards and or Technical Bulletins must be adhered to in the course of executing this specification. Copies of these standards and bulletins can be obtained from the CCG Technical Authority.
    a. Canadian Coast Fleet Safety Manual (DFO 5737)
    b. Coast Guard ISM Lock Out/Tag Out Procedures
    c. Coast Guard ISM Confined Space Entry Procedures
2. Contractor shall refer to General Notes for other applicable standards and regulations.

3.4 Owner Furnished Equipment

1. Unless otherwise stated, Contractor shall provide all materials, labour, and equipment required to perform all tasks identified in this specification.

4: PROOF OF PERFORMANCE:

4.1 Inspection

1. Contractor shall be responsible for all inspections and shall consult with TCMSB, prior to commencement of work, to determine an inspection schedule; at each inspection point, the Contractor shall advise CG TA, in advance, to allow his/her attendance.
2. Upon completion of all repairs and testing, Contractor and CGTA (or designate) shall conduct a final inspection and ensure all tanks, covers, vents and piping connections have been returned to operating conditions and attending TCMSB Inspector has completed all inspections.

4.2 Testing

1. The attending TCMSB Inspector shall determine the test method. All tests shall be witnessed by attending TCMSB Inspector and CGTA.
2. Each ballast tank shall be pressed up as per TCMSB Inspector requirement for "Test" Credit. Air testing.
3. For bidding purposes, Contractor shall bid on the pneumatic testing of each individual tank at 2.5 psi shall be bid on per tank but a hydro Press testing may be required by TCMS via extension on sounding tube, vent head or by overflowing at air vents. Contractor shall provide a cost for hydrostatic testing if required. This cost will be used for PWGSC 1379 adjustment to replace pneumatic testing if TCMSB Inspector determines hydrostatic testing is preferred.
    a. The cost for each method shall include the installation of blanks for suctions, overflow pipes, removal and blanking vent heads, and blanking additional tank openings.
    b. The cost shall also include returning all back to its original condition upon completion of testing.

4.3 Certification

1. Contractor is responsible to ensure TCMSB Inspector signs off all surveyed tanks in the vessel's Hull and Machinery Survey Record Book and Division 3 report under the field numbers as specified for the above for each tank Inspection and Test Credits.

5: DELIVERABLES:

5.1 Reports, Drawings, and Manuals

1. Contractor shall supply the product data sheets and MSDS sheets on all products used in the course of this work (cleaning, preparing and coatings).
2. Contractor shall provide a copy of all paint and environmental measurements taken during this work and given to CG TA.
3. Safety Management System forms and checklists shall be provided to CG TA.

5.2 Spares

N/A

5.3Training

N/A

HD-06 – Rudder Gland Packing

1: SCOPE:

The intent of this specification item is to re-pack the rudder gland with new Contractor supplied packing, and inspect rudder stock surface.

2: TECHNICAL DESCRIPTION:

2.1 General

1. Prior to any disassembly, the rudder stock shall be centered midships locally in the steering gear compartment. Rudder position shall then be checked for corresponding alignment with the ship's hull by sighting and measuring outside the ship. The Chief Engineer or his representative shall be present on both these occasions and a written statement shall be made up, by the Contractor, of the results, with a copy given to the CG TA.

2. Hydraulic steering cylinders shall be released from tiller head and swung clear or removed. All tiller head position feed-back linkages are to be carefully released and swung clear. Steering cylinders and feedback links are to be supported and/or stored safely clear of further work on carrier bearing. Any damage or misalignment of these components, or any other equipment in steering gear compartment will be repaired by the Contractor.

3. Rudder stock to be suitably rigged to allow tiller head nut to be released and removed.

4. Tiller head to be rigged and moved clear of carrier bearing.

5. Rudder carrier bearing to be released and lifted clear of seat, all components shall be completely degreased and cleaned for inspection. Bearing plate thickness shall be measured at four equally spaced points around its diameter. Carrier bushing I.D. shall be measured in two directions, top and bottom. Tiller head lower surface and carrier bearing upper surfaces to be inspected.

6. Rudder stock packing gland ring and all turns of packing material shall be removed. Packing gland, rudder stock and packing ring shall be cleaned for inspection.

7. Any repairs to the rudder stock or associated components shall be conducted through PWGSC 1379 action.

8. Rudder stock gland shall be repacked with new CFM Chesterton 329 Stern-lon square packing material. For bidding purposes, eight turns of 5/8" material will be required. Packing gland thread surfaces shall have marine grade anti-seize compound applied prior to reassembly. Contractor is to ensure this is the proper packing prior to ordering.

9. Carrier bearing and tiller head shall be secured. Steering rams and feedback links shall be reconnected. All wearing surfaces shall be adequately lubricated, with CFM supplied grease, at reassembly.

10. After the assembly of all components, hydraulic steering gear shall be operated and rudder swung Port to Stbd several times, full travel to be witnessed and operation to be to the satisfaction of CG TA.

2.2 Location

Steering Gear Compartment

2.3 Interferences

1. Contractor is responsible for the identification of any interference items, their temporary removal and storage and refitting to the vessel.
2. Contractor is responsible for protecting surrounding area and equipment while carrying out this work.

3: REFERENCES:

3.1 Guidance Drawings/Nameplate Data

1. Drawing: No. 501/01 (Rudder)
2. Drawing : No. 502/02 (Rudder Carrier Bearing),
3. Drawing: No. 502/01 1of2 & 2of2 (Steering Gear Seats, Rudder Stock & Details)

3.2 Standards and Regulations

N/A

3.3 Owner Furnished Equipment

1. Rudder Carrier Bearing nut wrench.
2. All materials and equipment needed shall be Contractor supplied.

4: PROOF OF PERFORMANCE:

4.1 Inspection

1. Rudder Gland shall be inspected for leaks once ship is afloat. Any leaks shall be repaired by the Contractor.
2. Visual inspection of rudder stock for wear/pitting.
3. Visual inspection of gland ring.
4. Rudder Carrier bearing measurements.

4.2 Testing

1. After the assembly of all components, hydraulic steering gear shall be operated and rudder swung Port to Starboard several times, full travel to be witnessed and operation to be to the satisfaction of CG TA.

4.3 Certification

N/A

HD-06 – Rudder Gland Packing

5: DELIVERABLES:

5.1 Reports, Drawings, and Manuals

1. Contractor shall supply CG TA with two copies of all measurements taken.

5.2 Spares

1. Contractor shall supply ship with 2 extra rows of packing material.

5.3Training

N/A

HD-07 – Fuel Tanks Survey

1: SCOPE:

Contractor shall open several fuel tanks for cleaning, TCMSB inspection, and testing. These tanks are considered as confined spaces under the Coast Guard's Safety Management System.

NOTE: Work specified for Fuel Tank #1 shall be completed in conjunction with Specification Item **H-04 #1 Fuel Tank Vent Renewal**.

2: TECHNICAL DESCRIPTION:

2.1 General

1. The fuel tanks shall be pumped as low as possible by ship's staff, leaving approximately twelve cubic meters of residue total, which shall be removed and disposed of by Contractor, in accordance with Provincial regulations. Contractor shall quote a rate per cubic meter of disposal, for PWGSC 1379 adjustment purposes.

   NOTE: No hot work shall be conducted on the ship during fuel transfer operations.

2. Contractor shall open up tanks by removing manhole covers. Inside of manhole covers and mating flanges shall be power-tool-cleaned (SSPC-SP3). Manhole studs shall be examined and defects brought to the attention of CG TA. Contractor shall include the cost to replace 10 studs and shall quote unit cost for PWGSC 1379 adjustment purposes.

3. Tanks shall be mechanically ventilated with equipment approved for explosive atmospheres. Tanks shall be ventilated to atmosphere and **not** to areas inside the vessel under any circumstances. Contractor to supply, operate, and maintain fans.

4. Gas-free certificates shall be distributed as directed in the GENERAL NOTES before entry in the tanks is allowed. Contractor shall maintain the tanks in a gas-free state by maintaining adequate ventilation and re-testing as required by regulations for the duration of the work.

5. All sludge and residue from tanks, as indicated in Section 2, shall be removed ashore for disposal in compliance with provincial regulations. All drain holes in the tanks' structure shall be cleared of any obstruction so as to allow free flow of liquids. Contractor shall ensure that tank outlets, inlets and sounding tubes are free of any dirt, debris, and obstructions.

6. All tanks and affected piping shall be hot water cleaned to ensure biological contaminants are killed **(Minimum Water Temperature Required is 80°** C).

7. Tanks shall be flushed with fresh water and certified gas-free for entry. Copies of the gas-free certificates shall be given to Chief Engineer and conspicuously posted to each tank entrance.

HD-07 – Fuel Tanks Survey

8. All tanks shall be wiped dry with clean, lint-free rags.

9. Tanks shall be thoroughly cleaned to Hand Tool SSPC-SP2 standard. Any rusty areas shall be power tool cleaned to SSPC.SP3 standard. All scale, dirt and debris shall be removed ashore and disposed of by Contractor.

10. All tanks shall be inspected by CG TA and attending TCMSB Inspector.

11. Following completion of the above work and TCMSB inspections, all tanks shall be closed up and hydrostatically tested with Fresh Water to TCMSB requirements (TCMSB may request an Air Test at 2.5 psi). If an Air Test is requested by TCMSB, Contractor shall bid separately for an Air Test on each tank for PWGSC 1379 Adjustments.

12. All overflow, fill, drain, sensor openings, sounding and vent lines shall be closed by a plug or blank flange prior to testing, and opened following completion. All blanks or plugs required for hydrostatic testing shall be supplied, installed and later removed by Contractor. Contractor shall notify Chief Engineer a minimum of two (2) hours prior to filling of each tank.

13. After fresh water hydrostatic testing is complete, affected tanks shall be emptied & wiped dry with clean, lint-free rags prior to closing up.

14. All fluids used for cleaning & testing purposes shall be disposed of in accordance with provincial and federal regulations by Contractor.

15. CG TA shall be given the opportunity to inspect the tanks prior to final closing-up.

16. All tank manholes shall be secured using new gaskets and o-rings, consisting entirely of materials compatible with installation in Fuel Oil tanks. All manhole fasteners shall be secured with anti-seize compound applied.

17. All work shall be completed to satisfaction of CG TA.

2.2 Location

FIELD #	TANK	LOCATION	CPTY(M^3)
3L002	#1 Fuel Tank	Frs 58-65	28.8
3L007	E/R Wing Tank (Sett) Port	Frs 27-37	28.7
3L008	E/R Wing Tank (Sett) Stbd	Frs 27-37	28.7
3L009	Flume Stability Tank	Frs 27-30	52.0
3L021	Day Tank	Frs 48-50	6.0

2.3 Interferences

1. Contractor is responsible for the identification of any interference items, their temporary removal and storage and refitting to the vessel.
2. Contractor is responsible for protecting surrounding area and equipment while carrying out this work.

3: REFERENCES:

3.1 Guidance Drawings/Nameplate Data

1. Drawing# 120/004 Tank Capacity Plan
2. Drawing # 532/02 List of Manholes
3. Drawing # 703/04 Manhole Cover

3.2 Standards and Regulations

1. The following Coast Guard Standards and or Technical Bulletins must be adhered to in the course of executing this specification. Copies of these standards and bulletins can be obtained from the CCG Technical Authority.
    a. Canadian Coast Fleet Safety Manual (DFO 5737)
    b. Coast Guard ISM Lock Out/Tag Out Procedures
    c. Coast Guard ISM Confined Space Entry Procedures

3.4 Owner Furnished Equipment

N/A

4: PROOF OF PERFORMANCE:

4.1 Inspection

1. Contractor shall be responsible for coordination of all inspections with TCMSB Inspector, and produce an inspection schedule prior to commencement of work.
2. Contractor shall provide CG TA a minimum of four hours' notice of each inspection, to allow his/her attendance.
3. Upon completion of all repairs and testing, Contractor and CG TA (or designate) shall conduct a final inspection and ensure all tanks, covers, vents and piping connections have been returned to operating conditions and attending TCMSB Inspector has completed all inspections for credit.

4.2 Testing

1. Attending TCMSB Inspector shall determine the test method. All tests shall be witnessed by attending TCMSB Inspector and CG TA.
2. For bidding purposes, Contractor shall bid on hydrostatic testing of each individual tank, and provide a unit price each tank. The quote shall include the installation and removal of blanks for suctions, overflow pipes, removal and blanking vent heads, and blanking additional tank openings. Tank drainage (including the disposal of water and the wiping down of the tank internals) shall also be included in this quote.
3. If required, the separately quoted price shall be applied for pneumatic testing of 2.5 psi on each tank shall be used for PWGSC 1379 Adjustments (no Fresh Water added or drained and no wiping required).

4.3 Certification

1. Contractor is responsible to ensure the TCMSB Inspector signs off all surveyed tanks in the vessel's Hull and Machinery Survey Record Book and Division 3 report under the field numbers specified above.

5: DELIVERABLES:

5.1 Reports, Drawings, and Manuals

1. Contractor shall supply the product data sheets and MSDS sheets on all products used in the course of this work (cleaning, coating, sterilizing and neutralizing).
2. Contractor shall provide a copy of all test certificates to CG TA.
3. Safety Management System forms and checklists shall be provided to the CG TA.

5.2 Spares

N/A

5.3Training

N/A

HD-08 – Ultrasonic Thickness Measurements

1: SCOPE:

The intent of this Specification item is to complete an Ultrasonic Thickness Measurement report on ship's traverse section including longitudinals and girders, and exposed deck areas to satisfy TCMSB Deficiency.

2: TECHNICAL DESCRIPTION:

2.1 General

1. This specification item shall be completed continuing the work completed by TEAM Industrial Services, Inc. on August 24-28, 2015. A copy of this report can be found in Appendix D – TEAM UTM Survey Aug. 2015.

2. Contractor shall complete a UTM survey of the ship's hull, exposed decks, framing, and bulkheads in areas where TEAM Industrial failed to collect readings. These areas are notably:

    a) Engine Room Bulkhead No. 49
    b) Port and Starboard Fresh Water Tank Bulkheads and Framing
    c) Cofferdam Starboard side
    d) Shaft Tunnel frames 16-30

    NOTE: Shaft tunnel framing is filled with approx. 45 tons of steel punches covered by 6" of concrete. There is also a small layer of concrete below steel punches. Any items removed/disturbed shall be placed in original position. Any disturbed concrete shall be removed from ship and disposed of; new concrete shall be poured as originally fitted.

3. Contractor shall provide the necessary personal to remove interference items as needed and ensure access for compressive readings to be obtained to the satisfaction of CG TA and TCMSB.

4. Areas which are not listed or contained in the TEAM report may require additional testing based on the requirements of TCMSB and CGTA.

5. Contractor shall include in the bid the cost for 8 hours use of person lift & operator in order to test ship's hull if required. Contractor shall also include in their bid the cost per hour for use of person lift & operator for adjustment purposes.

6. Contractor shall include in their bid the cost for two (2) certified UTM technicians for 16 hours of work per person. Contractor shall also include in the bid the cost per 8 hours for one (1) certified technician for price adjusting purposes.

2.2 Location

Various locations throughout the ship, but notably the Engine Room and Shaft Tunnel.

2.3 Interferences

1. Contractor is responsible for the identification of any interference items, their temporary removal and storage and refitting to the vessel.
2. Contractor is responsible for protecting surrounding area and equipment while carrying out this work

3: REFERENCES:

3.1 Guidance Drawings/Nameplate Data

1. Drawing: 182-01 Ballast Plan

3.2 Standards and Regulations

N/A

3.3 Owner Furnished Equipment

N/A

4: PROOF OF PERFORMANCE:

4.1 Inspection

1. Areas where testing is completed may be inspected by TCMSB and CG TA.

4.2 Testing

1. Ultrasonic Thickness Measurement devices are to be properly calibrated with certificates.

4.3 Certification

1. Contractor shall provide a copy of UTM report to TCMSB for certification of ship's underwater hull & structure.

5: DELIVERABLES:

5.1 Reports, Drawings, and Manuals

1. Two (2) copies of the UTM report shall be given to the CG TA along with two digital copies supplied on two separate USB sticks.
2. One (1) copy of the UTM report shall be given to TCMSB.

5.2 Spares

N/A

5.3Training

N/A

HD-09 – Stbd. Fresh Water Tank Repairs

1: SCOPE:

The intent of this specification item is to renew corroded and damaged steel plating on the starboard fresh water tank and have it signed off by TCMSB for its five year survey credit.

2: TECHNICAL DESCRIPTION:

2.1 General

1. Contractor shall complete this task in conjunction with Specification item **HD-10 Frames Renewal.**

2. Contractor shall close, isolate and lock out the tank suction & fill valves.

3. Contractor shall remove any water remaining in tank following discharge of the contents. The amount is estimated to be approx. 2 cubic meters. Contractor shall quote a cost per 100 liters of waste fluid removal for adjustment purposes by PWGSC 1379 action.

4. Contractor shall remove tank manhole cover.

5. Tank shall be certified safe for personnel to enter prior to any work being carried out internally. Contractor shall arrange for a certified Marine Chemist to visit the ship, test the tank, and certify that tank is "Safe for Entry" for personnel to enter and "Safe for Hot Work". Copies of certificates shall be given to CGTA and posted outside manhole cover in a conspicuous location and one copy to be provided to CGTA. Tank shall be constantly ventilated & tested daily.

6. Contractor shall note the tank is fitted with PSM tank level and overflow sensors and shall suitably protect transducers when carrying out this work. Proper functioning of these sensors shall be proven before and after completion of work.

7. Contractor shall protect tank surfaces that do not need steel work from excessive welding/grinding/cutting debris & contamination.

8. Contractor shall carry out steel repair work as described in Lengkeek Vessel Engineering Specification for Structural Repair of Corrosion Damage.

9. All tank internal and external areas of coating loss, breakdown, or blistering, as identified by CGTA and Contractor, shall be scaled and mechanically cleaned to SSPC-SP3 standard. All prepared areas shall extend and feather out to sound, intact coating, tightly adhered to steelwork. Intact coating around perimeter edges of prepared areas shall be generously feathered. Tank then shall be thoroughly cleaned and wiped down to remove any and all grit, dirt, debris, and any other solid or liquid contamination that may be present, prior to coating application. CGTA shall perform an additional inspection of tank prior to application of repair coatings. Contractor shall be responsible for disposing of all removed paintwork, scale, dirt, etc. in an environmentally safe manner.

10. Contractor shall apply Royal Coatings "Easy Prep" (see Appendix "A" for product data sheet) by airless sprayer to all internal surfaces of the tanks and let stand 20 to 30 minutes. Apply 8,000-

HD-09 – Stbd. Fresh Water Tank Repairs

10,000 psi water blasting to all internal surfaces then remove wash down liquid and debris and ventilate tank until dry.

11. Upon completion of water jet blasting, all residue and debris shall be cleaned and removed from the tanks. Contractor shall ensure that all sounding and suction pipes are free and clear as well as all limber holes in the floors, stringers and webs so as to allow for proper drainage. Upon completion of all cleaning, CG TA shall thoroughly inspect tank internals.

12. Contractor shall bid on price to re-coat 117 m^2 of internal tank surface. Contractor shall provide a Unit Cost per square meter to re-coat tank surfaces for adjustment purposes by PWGSC 1379 action.

    Suggested supplier: Royal Coatings - EasyPrep, EasyPrime and EasyFlex is:
    Barry Schnare – Manager, Marineand Industrial Coatings
    K&D Pratt
    55 Akerley Blvd,
    Dartmouth, NS
    B3B 1M3
    DL: (902) 480-3011 C: (902) 456-9238
    Barry.schnare@kdpratt.com www.kdpratt.com

13. Before application, coatings (EasyPrime and EasyFlex) must be above 22º C prior to mixing. See Appendix "A" for EasyPrime and EasyFlex product data sheets.

14. Contractor shall note that application conditions must provide a substrate temperature greater than 3ºC and rising while air temperature must be greater than 4ºC. Relative humidity shall be lower than 90% during application. Contractor shall be responsible to supply and maintain heating/dehumidifying equipment required to ensure proper environment

15. All disturbed areas and new plate shall be coated with one coat to 3-4mils of Royal's EasyPrime to all prepared steel. Any sharp edges within the prepared areas shall be stripe coated with EasyFlex. Apply one top coat of EasyFlex to all primed areas to a wet film thickness of 12-14mils. Runs and sags in the applied coating should be left alone. Allow the coating to cure for 48hours @ 20ºC or above. At lower temperatures let cure for 72 hours. When coating is thoroughly cured, tank to be inspected by CG TA and local accredited health inspector. Coating adhesion and condition must be acceptable to CG TA and local accredited health inspector. Contractor shall obtain verbal approval from CGTA prior to closing this sensitive tank.

16. Manhole cover inside shall be given the same cleaning, prep and paint treatment as tank internals.

17. Paint scheme on Exterior of Stbd Potable Water tank and manhole shall be two contrasting coats of International INTERSHIELD ENA 300V epoxy coatings.

18. Upon completion of above work and to satisfaction of CG TA and accredited health inspection representative, tank shall be wiped clean with lint-free rags. Sounding pipes, suction pipes and vents shall be proven clear prior to filling the tank with potable water. All debris shall be

removed ashore tank closed up in good order. CG TA shall examine each tank prior to final closing. Manhole covers shall be installed using new gaskets/O-ring as fitted. Anti- seize compound (marine grade) shall be applied to the fasteners of the manhole covers. No use of power tools shall be permitted to tighten the fasteners.

19. Upon completion of all work tank shall be filled with certified potable water. Vent shall be removed and each tank shall be filled to overflowing for a hydrostatic test on tank to the satisfaction of CG TA. Vent shall be installed with new gaskets and SS fasteners upon completion of all work.

20. Tank shall be filled with certified potable water and calculated amount of Sodium hypochlorite 5% solution to attain 50mg/L of free chlorine for the purpose of superchlorination of the tank. Contractor shall supply enough 5%~sodium hypochlorite solution to provide a mixing ratio of 1liter solution/ 1 m3 water within tank. Tank shall rest in this condition for a period of 24hrs. The solution shall be circulated by ship's personnel as required.

21. Super-chlorinated water shall then be run through various potable water piping systems onboard the vessel for at least one hour. Testing shall be carried out to ensure that the super-chlorinated solution is flowing through each tap. Contractor shall test various locations to prove this.

22. Upon completion of super-chlorination process, tank solutions shall be neutralised using 35% hydrogen peroxide. Contents of tank water shall be tested to determine that chlorine has been neutralised. Once this has been achieved, Contractor shall dispose of the water in accordance with the Provincial Regulations. Contractor shall submit a report to CG TA showing the results of the various tests during the super-chlorination /de-chlorination process.

23. Tank shall receive another complete fill and flush operation with certified potable water. All water used in the flushing process shall be disposed of by Contractor.

24. Contractor shall fill the tank with certified potable water. Contractor shall dose and test tank contents until a free chlorine maintenance level of 0.2-0.5 mg/l of free chlorine has been attained.

25. Tank shall have a water sample taken once step 28 is completed AND after it has rested in the tank for a period of three (3) days. Contractor shall include an allowance of $1,500.00 to retain the services of an accredited Potable water sampling company. Samples shall be collected in approved containers by a representative of accredited company and then tested at their laboratory facility. The water shall be certified acceptable as a potable source. CG TA shall receive the report and final analysis of potable water samples for posting onboard of the vessel.

26. Contractor shall arrange and co-ordinate the visits required for Provincial Health Inspector or accredited testing authority.

2.2 Location

Engine room, frames 38-48, Capacity 20.82m^3, Surface Area 117m^2

2.3 Interferences

1. Contractor is responsible for the identification of any interference items, their temporary removal and storage and refitting to the vessel.
2. Contractor is responsible for protecting surrounding area and equipment while carrying out this work.
3. HD-10 Frame Renewal Specification Item

3: REFERENCES:

3.1 Guidance Drawings/Nameplate Data

1. Appendix B - Lengkeek Vessel Engineering Frame Renewal Spec *J15057-R01, rev0*
2. Drawing # 120/004 Tank Capacity Plan
3. Drawing # 532/02 List of Manholes
4. Drawing # 703/04 Manhole Cover

3.2 Standards and Regulations

1. Contractor is required to abide by the Fleet Safety and Security Manual provisions for Hot Work, Confined Safe Entry and Fall Protection and/or follow an equivalent safety management system. Task Hazard assessments will be performed prior to work commencing each working day.
2. Any necessary welding shall be performed to CWB 47.1 and visually inspected by a qualified welding supervisor.
3. Any item of work involving the use of heat in its execution requires that Contractor shall advise Chief Engineer before starting such heating and upon its completion.
    a. Contractor shall provide suitable fire retardant coverings to protect wire ways, cables, equipment and structure from welding slag, splatter etc. in all surrounding areas.
    b. Contractor shall provide sufficient suitable fire extinguishers and a fire watch during any such heating and until the work has cooled.
    c. The Ship's extinguishers shall **not** be used except in an emergency.
    d. Contractor shall service and shall refill any ship's extinguisher used under such conditions

3.3 Owner Furnished Equipment

N/A

4: PROOF OF PERFORMANCE:

4.1 Inspection

1. Contractor shall allow adequate time and availability for inspection whenever required by this specification.
2. Contractor shall follow the manufacturer's paint application processes.
3. Contractor shall obtain the services of an independent certified NACE International (NACE) inspector with a minimum certification of Coating Inspector Program Level 2, to verify the work as specified throughout the process and can provide assurance to the CCG Technical Authority that the Contractor has followed the correct application procedures. Copy of the NACE inspector qualifications shall be given to the CGTA and PWGSC.

4. In the overall quote, Contractor shall allow $5,000 for services of a certified NACE inspector Field Service Representative. This FSR allowance shall cover travel and living expenses only. The FSR shall be reimbursed for the authorized travel and living expenses reasonably and properly incurred in the performance of the work at cost without any allowance for overhead or profit. The final cost shall be adjusted accordingly by PWGSC 1379 action upon receipt of invoice. Contractor shall make all necessary arrangements for the procurement of the FSR's services.
5. Contractor shall ensure that all new equipment be used for the application of the coating, including but not limited to: hoses, spray guns, brushes, etc. This requirement is important to ensure zero contamination from solvents, which may be introduced inadvertently by used equipment that has subsequently been cleaned with solvents of any kind.
6. Contractor shall be responsible for coordination of all inspections with TCMS Surveyor, and produce an inspection schedule prior to commencement of work.
7. Contractor shall provide the Owner's representative a minimum of four hours' notice of each inspection, to allow his/her attendance.
8. Upon completion of all repairs and testing, the Contractor and the Owner's representative (or designate) shall conduct a final inspection and ensure all tanks, covers, vents and piping connections have been returned to operating conditions and the attending TCMS Surveyor has completed all inspections.

4.2 Testing

<u>WATER QUALITY TESTING:</u>

1. After the final fill of the tanks, three (3) water samples shall be collected and labelled for laboratory testing. The collection of the potable water samples (one from tank, one from galley tap, one from chief scientist cabin tap) for laboratory testing shall be witnessed by CG TA. To maintain the bacteriological validity of the collected samples, they shall be immediately transported to the qualified laboratory facility in thermally insulated outer containers.
2. Contractor shall ensure that the water testing has a baseline of 28 parameters for the water quality test, and shall be performed as per section 7.A.12 of the Fleet Safety Manual. After the super chlorination procedures, and in addition to the Fleet Safety Manual, another 28 parameter test shall be performed three days after the baseline test with the water in the tank remaining stagnant.
3. All costs associated with all the water sampling, containers, testing, shipping, and reporting fees shall be Contractor's responsibility. The cost shall be included in the overall bid.
4. A total of six (6) water tests (28 parameter) shall be completed throughout the scope of this work.

<u>TANK TESTING FOR SURVEY PURPOSES:</u>

1. The attending TCMSB Inspector shall determine the test method. All tests shall be witnessed by the attending TCMSB Inspector and the CGTA.
2. For bidding purposes, Contractor shall bid on the pneumatic testing of each individual tank, and provide a unit price for hydrostatic testing each tank. The quote shall include the installation and removal of blanks for suctions, overflow pipes, removal and blanking vent heads, and blanking additional tank openings. Tank drainage (including the disposal of water and the wiping down of the tank internals) shall also be included in this quote.

<u>SENSOR TESTING:</u>

1. Tank level sensor accuracy shall be verified by CG TA while filling the tank at end of repairs.

4.3 Certification

1. WATER: Contractor shall expeditiously provide to the Owner test certificates of water samples (chemistry and bacteriological) from a Provincially H&W approved laboratory that certifies that the water in the tanks is "fit to drink". The tests shall be carried out for bacteria as per the Canadian Drinking Water Guidelines. The Chemistry Testing shall examine all parameters as per the Guidelines for Canadian Drinking Water Quality including pH, TDS, Elements and Organic Compounds
2. TANK: Contractor is responsible to ensure the TCMS Surveyor signs off all surveyed tanks in the vessel's Hull and Machinery Survey Record Book and Division 3 report under the field numbers specified above

5: DELIVERABLES:

5.1 Reports, Drawings, and Manuals

1. Contractor shall supply the product data sheets and MSDS sheets on all products used in the course of this work (cleaning, coating, sterilizing and neutralizing).
2. Contractor shall provide 2 copies of all test certificates to CG TA.
3. A paint report shall be prepared, and provided to VMM and CG TA.
4. Safety Management System forms and checklists shall be provided to CG TA.
5. All water test reports shall be provided to VMM and CG TA.
6. Contractor shall provide 2 reports to CG TA of all steel work completed.

5.2 Spares

N/A

5.3Training

N/A

HD-10 – Frames Renewal

1: SCOPE:

The intent of this specification item is to repair damaged framing in the engine room as per Lengkeek Vessel Engineering specification.

2: TECHNICAL DESCRIPTION:

2.1 General

1. Contractor shall complete this task in conjunction with Specification item **HD-09 Stbd Fresh Water Tank Repairs.**

2. Contractor shall pump out, clean & certify gas free "Safe for Hot Work" in bilge area and in Workshop / Sewage tank areas where work shall take place in this spec and as described in **Appendix B - Lengkeek Specification for Structural Repairs**

3. Contractor shall carry out steel repairs as described in **Appendix B - Lengkeek Specification for Structural Repairs.**

4. In conjunction with Specification Item **HD-08 Ultrasonic Thickness Measurements**, Contractor shall take another 200 Ultrasonic Thickness measurements on watertight bulkhead Frame 50 back to including frame 46 for further analysis of wastage in this area. Contractor shall bid on 6 m^2 of steel plate (3/8") on lowest end of watertight bulkhead. Contractor shall renew steel bulkhead frames and stiffeners in this lower area from hull to first 18' vertically.

5. Contractor shall also remove Port and Stbd sea strainers and disassemble. Sea strainers shall be 100% grit-blasted and coated as per coatings detailed in **HD-03 Underwater Hull Painting**. Approximate area of both strainers interior and exterior is approximately 4 m^2. Contractor shall install new fasteners and gaskets on sea strainers and isolation valves.

6. This work shall also include four sea water isolation valves plus two recirculation valves for completed overhaul and lapping of seats and installation of new gaskets and valve packing.

7. Any disturbed paintwork and new metal shall be prepared and painted with two contrasting coats of International INTERSHIELD ENA 300V epoxy coatings.

8. Contractor shall install all new fasteners on pipe flanges and brackets. Contractor shall apply anti-seize paste on all fasteners.

2.2 Location

As described in Appendix B - Lengkeek Specification for Structural Repairs

2.3 Interferences

1. Contractor is responsible for the identification of any interference items, their temporary removal and storage and refitting to the vessel.
2. Contractor is responsible for protecting surrounding area and equipment while carrying out this work.

3: REFERENCES:

3.1 Guidance Drawings/Nameplate Data

1. Appendix B - Lengkeek Specification for Structural Repairs
2. Drawing: Structural Repairs 1 of 1

3.2 Standards and Regulations

1. Contractor is required to abide by the Fleet Safety and Security Manual provisions for Hot Work, and Fall Protection and/or follow an equivalent safety management system. Task Hazard assessments will be performed prior to work commencing each working day.
2. Any necessary welding shall be performed to CWB 47.1 and visually inspected by a qualified welding supervisor.
3. Any item of work involving the use of heat in its execution requires that Contractor shall advise Chief Engineer before starting such heating and upon its completion.
    a. Contractor shall provide suitable fire retardant coverings to protect wire ways, cables, equipment and structure from welding slag, splatter etc. in all surrounding areas.
    b. Contractor shall provide sufficient suitable fire extinguishers and a fire watches during any such heating and until the work has cooled.
    c. Ship's extinguishers shall **not** be used except in an emergency.
    d. Contractor shall service and shall refill any ship's extinguisher used under such conditions

3.3 Owner Furnished Equipment

N/A

4: PROOF OF PERFORMANCE:

4.1 Inspection

1. Contractor shall allow adequate time and availability for inspection whenever required by this specification.
2. The attending TCMSB inspector shall determine the test method. All tests shall be witnessed by the attending TCMSB inspector and the CGTA

4.2 Testing

1. The attending TCMSB inspector shall determine the test method. All tests shall be witnessed by attending TCMSB inspector and CGTA

4.3 Certification

1. Contractor shall ensure TCMSB inspector approves all repairs conducted & signs off any related documents in Ships DIV III Report.

5: DELIVERABLES:

5.1 Reports, Drawings, and Manuals

1. Contractor shall supply CG TA with 2 copies of final report detailing all steel work repaired.
2. Contractor shall supply CG TA with 2 copies of weld test results.

HD-10 – Frames Renewal

5.2 Spares

N/A

5.3Training

N/A

HD-11 – Cathodic System

1: SCOPE:

The intent of this specification item is to renew all of the Impressed Current system anodes (5 in total).

2: TECHNICAL DESCRIPTION:

2.1 General

1. The ship is fitted with two (2) each 'Cathelco' marine growth (MG) and trap corrosion (TC) impressed current anodes, one each fitted to port and starboard Sea Chests, Frames 48 - 49: four (4) anodes in total. There is also one (1) combination anode fitted in Aft Sea Chest located at Frame 12. Contractor shall bid on renewing all five (5) of these anodes. New anodes (GSM) will be Coast Guard supply.

2. Before docking, while the ship is still afloat at Contractor's dock, all five (5) anodes shall have galvanic voltage, resistance (system off) and voltage/amp readings (system on) measured and recorded by a qualified person, **identified by Contractor in their bid.** Three (3) copies of these readings shall be passed to Chief Engineer within one working day of their measurements being taken.

3. Removal and installation of anodes shall be scheduled so that abrasive blasting and painting of Underwater Hull (Item HD-03) is completed with anodes removed.

4. Contractor is to transport CCG-supplied replacement anodes (GSM) from ship's store to dock floor for installation as required.

5. All removed used anodes shall be turned over to CGTA or disposed of as directed by CGTA.

6. Contractor shall isolate, lock out and tag power supply to the five (5) anodes. Contractor shall disconnect and label each anode at its local connection. Anodes shall be removed from sea chests, disconnected from their mounting assemblies and marked MG and TC to ensure proper replacement.

7. All anodes shall be renewed and installed as per manufacturer's instructions, reference drawing No. A1669/A/4973. 'O'-rings, seals and gaskets shall be renewed on re-assembly, not GSM. CGTA shall witness assembly of each anode before it is re-installed. **NOTE:** A special anode removal and installation tool is to be used. This tool will be supplied by the indicated Cathelco representative.

8. All connections shall be proven water tight on re-assembly, and verified during floating of the vessel.

9. After re-assembly and with ship afloat, galvanic voltage, resistance (system off), and voltage/amp (system on) measured and recorded by a qualified person, **identified by Contractor in his bid.** Three (3) copies of these readings are to be passed to CGTA within one working day of their being taken. Cathodic system shall be proven to be

correctly operating and readings checked to be within expected value ranges.

10. Contractor shall arrange to have a 'CATHELCO' representative (FSR) on site to oversee activities, while this work is being performed. Potential Contractors shall quote $5,000.00 for services of 'CATHELCO' representative. Final FSR costs will be negotiated with PWGSC to whom Contractor shall supply copies of all related documentation to verify all actual expenses.

Suggested 'CATELCO' representative can be contacted as follows:

Jastram Technologies Limited
214 Wright Avenue
Dartmouth, Nova Scotia, B3B 1R6
Tel.: 902 - 468 - 6450
Fax: 902 - 468 - 6901
E-mail: jastramtech@ns.aliantzinc.ca

2.2 Location

As stated in Technical Description

2.3 Interferences

1. Contractor is responsible for the identification of any interference items, their temporary removal and storage and refitting to the vessel.
2. Contractor is responsible for protecting surrounding area and equipment while carrying out this work.

3: REFERENCES:

3.1 Guidance Drawings/Nameplate Data

1. Drawing No. A1669/A/4973
2. Eastern Canadian Representative for Corrintec / Cathelco is:
   Jastram Technologies Ltd., 22 Trider Crescent, Dartmouth, Nova Scotia,
   Attn: Mark Starratt, Telephone: 902-468-6450, Fax: 902-468-6901, e-mail: jastramtech@ns.aliantzinc.ca.

3.2 Standards and Regulations35T

1. The following Coast Guard Standards and or Technical Bulletins must be adhered to in the course of executing this specification. Copies of these standards and bulletins can be obtained from the CCG Technical Authority:
   Canadian Coast Fleet Safety Manual (DFO 5737)
   Coast Guard ISM Lock Out/Tag Out Procedures

3.3 Owner Furnished Equipment

1. All five (5) cathodic anodes.

4: PROOF OF PERFORMANCE:

4.1 Inspection

1. Final assembly of the anodes to ensure they are secure and that wiring is tight.
2. Once the ship is afloat all connection shall be checked to ensure they are water tight.
3. Final readings of voltage& resistance with system off as well as voltage & amperage with system on once ship is afloat are within OEM specifications.

4.2 Testing

1. As detailed above in 4.1 Inspection

4.3 Certification

N/A

5: DELIVERABLES:

5.1 Reports, Drawings, and Manuals

1. Three copies of the report is to be provided with all the readings taken on the system prior to dry docking and post dry docking with the system on & off.

5.2 Spares

N/A

5.3Training

N/A

HD-12 – ADCP Removal

1: SCOPE:

The intent of this specification item is to completely crop out the ADCP & replace it with hull plating matching the current hull shape/form.

2: TECHNICAL DESCRIPTION:

2.1 General

1. Contractor shall be responsible for cleaning & gas freeing bilge area in way of repairs.
2. Contractor shall complete this task in conjunction with specification item **HD-03 Underwater Hull Painting**.
3. Any disturbed paintwork and new metal shall be coated as per Specification item **HD-03 Underwater Hull Painting**. Care shall be taken as not to have to paint this area twice if possible.
4. Contractor shall complete this task as described in **Appendix C - Lengkeek Specification for ADCP Transducer Renewal**

2.2 Location

See Appendix C - Lengkeek Specification for ADCP Transducer Renewal

2.3 Interferences

1. Contractor is responsible for the identification of any interference items, their temporary removal and storage and refitting to the vessel.
2. Contractor is responsible for protecting surrounding area and equipment while carrying out this work

3: REFERENCES:

3.1 Guidance Drawings/Nameplate Data

1. Appendix C - Lengkeek Specification for ADCP Transducer Renewal
2. Drawings: ACDP Transducer Removal 1 of 2 & 2 of 2

3.2 Standards and Regulations

See Appendix C - Lengkeek Specification for ADCP Transducer Renewal

3.3 Owner Furnished Equipment

N/A

4: PROOF OF PERFORMANCE:

4.1 Inspection

1. Contractor shall allow adequate time and availability for inspection whenever required by this specification.

2. The attending TCMSB inspector shall determine the test method. All tests shall be witnessed by the attending TCMSB inspector and the CGTA

4.2 Testing

1. The attending TCMSB inspector shall determine the test method. All tests shall be witnessed by the attending TCMSB inspector and the CGTA.

4.3 Certification

1. Contractor shall ensure TCMSB inspector approves all repairs conducted & signs off any related documents in Ships DIV III Report

5: DELIVERABLES:

5.1 Reports, Drawings, and Manuals

1. Contractor shall supply CG TA with 2 copies of final report detailing all steel work repaired.
2. Contractor shall supply CG TA with 2 copies of weld test results

5.2 Spares

N/A

5.3Training

N/A

HD-13 – Drains Tanks

1: SCOPE:

The intent of this specification item shall be to open up the Drains (Offal) Tanks in order to clean, inspect and repair any damage to the coating inside, paying specific attention to the areas with clad welding. These tanks will also be tested for TCMSB credit.

2: TECHNICAL DESCRIPTION:

2.1 General

1. Contractor is to note that these tanks are fed by drains from the Fish Lab Processing Room, Galley sink and the Laundry Room. Contractor shall arrange an alternative means of collecting discharges from the Laundry Room and Galley to maintain vessel services.

2. Contractor shall provide a method to have all tanks identified gas freed, and certified Safe for Entry for personnel to enter and Safe for Hot Work. Certificates shall be forwarded to CGTA and a copy shall be posted in a conspicuous location near the entrance to each tank.

3. Tanks will be pumped down as low as possible by ship's staff. Approximately two (2) tonnes total residue will remain in the tanks, which shall be removed and disposed of by Contractor. Tanks shall be pumped down by Contractor as low as possible to remove this residue using Contractor supplied pumps, hoses, hardware, and personnel.

4. Manhole covers shall be removed. Contractor shall provide each tank with a mechanical ventilation/extraction system, vented to outside of the ship. Good ventilation must be provided and any blowers/extractors must ensure good air movement and solvent vapour removal from the lowest point in the tanks. Vapours as well as airborne dust and debris shall not be allowed to enter the vessel.

5. Tanks shall be thoroughly water jet cleaned; all scale, dirt and debris shall be removed ashore and disposed of by Contractor. Cleaning shall be carried out using freshwater hydro blasting at 5,000 psi minimum. Tank internals shall be inspected by CGTA and TCMSB Inspector.

6. After each tank has been hydro blasted, Contractor and CGTA shall enter each tank and agree upon an area to be prepared and painted. For bidding purposes the Contractor is to bid on preparing and painting 50% of the surface area of each tank for a total of 56m². Contractor shall also provide a unit cost for preparing and painting one (1) square meter of tank area for adjustment purposes.

7. All identified damaged tank coatings shall be power-tool-cleaned to SSPC-SP3 standard, and sufficiently feathered to existing coatings. All prepared tank surfaces shall be given two (2) coats of Amercoat 235 (Formerly Bar-Rust 235) as per manufacturer's recommendations. First coat shall be of a contrasting colour to the existing coating, and the finish coat shall match the existing colour.

8. The Drains (Offal) Tanks shall be surveyed by TCMSB for credit, and tested as per the requirements laid out in the testing procedures section.

9. Contractor shall test and prove that all pump control floats and high level alarm switches in both tanks are functioning as required. There are a total of six (6) float controllers, three (3) per tank.

10. All manhole covers shall be cleaned and coated as per the requirements for tank surfaces, and Contractor shall ensure all debris is removed from each tank.

11. All tank manholes covers are to be re-installed using new, Contractor-supplied gaskets/o-rings similar to the ones fitted. Anti-seizing compound shall be used on all threads. Contractor shall quote separately the unit cost per stud to replace any broken manhole securing studs. The CG TA shall be given the opportunity to inspect the drains tanks prior to final close-up.

2.2 Location

	Offal Tank	Frames	100% Volume (m^3)	Surface Area (m^2)
a.	#17 Drain Tk.(P)	11 - 17	7.9	56.0
b.	#18 Drain Tk.(S)	11 - 17	7.9	56.0

Drawings: 120/004 Tank Capacity Plan, 532/02 List Of Manholes, 703/04 Manhole Cover

2.3 Interferences

1. Contractor is responsible for the identification of any interference items, their temporary removal and storage and refitting to the vessel.
2. Contractor is responsible for protecting surrounding area and equipment while carrying out this work.

3: REFERENCES:

3.1 Guidance Drawings/Nameplate Data

Drawing: 120/004 Tank Capacity Plan, 532/02 List Of Manholes, 703/04 Manhole Cover

3.2 Standards and Regulations

1. The following Coast Guard Standards and or Technical Bulletins must be adhered to in the course of executing this specification. Copies of these standards and bulletins can be obtained from the CCG Technical Authority.
    a. Canadian Coast Fleet Safety Manual (DFO 5737)
    b. Coast Guard ISM Lock Out/Tag Out Procedures
    c. Coast Guard ISM Confined Space Entry Procedures
2. Contractor shall refer to General Notes for other applicable standards and regulations.

3.3 Owner Furnished Equipment

1. Unless otherwise stated, Contractor shall provide all materials, labour, and equipment required to perform all tasks identified in this specification.

4: PROOF OF PERFORMANCE:

4.1 Inspection

1. Contractor shall be responsible for all inspections and shall consult with TCMS, prior to commencement of work, to determine an inspection schedule; at each inspection point, the Contractor shall advise CG TA, in advance, to allow his/her attendance.
2. Upon completion of all repairs and testing, Contractor and CGTA (or designate) shall conduct a final inspection and ensure all tanks, covers, vents and piping connections have been returned to operating conditions and attending TCMSB Inspector has completed all inspections.

4.2 Testing

1. The attending TCMSB Inspector shall determine the test method. All tests shall be witnessed by attending TCMSB Inspector and CGTA.
2. Each ballast tank shall be pressed up as per TCMSB Inspector requirement for "Test" Credit.
3. For bidding purposes, Contractor shall bid on the pneumatic testing of each individual tank at 2.5 psi but a hydro Press testing may be required by TCMS via extension on sounding tube, vent head or by overflowing at air vents. Contractor shall provide a cost for hydrostatic testing if required. This cost will be used for PWGSC 1379 adjustment to replace pneumatic testing if TCMSB Inspector determines hydrostatic testing is preferred.
    a. The cost for each method shall include the installation of blanks for suctions, overflow pipes, removal and blanking vent heads, and blanking additional tank openings.
    b. The cost shall also include returning all back to its original condition upon completion of testing.

4.3 Certification

1. Contractor is responsible to ensure the TCMS Surveyor signs off all surveyed tanks in the vessel's Hull and Machinery Survey Record Book and Division 3 report.

5: DELIVERABLES:

5.1 Reports, Drawings, and Manuals

1. Contractor shall supply the product data sheets and MSDS sheets on all products used in the course of this work (cleaning, preparing and coatings).
2. Contractor shall provide a copy of all paint and environmental measurements taken during this work and given to CG TA.
3. Safety Management System forms and checklists shall be provided to CG TA

5.2 Spares

N/A

5.3Training

N/A

HD-14 – Stern Ramp Repairs

1: SCOPE:

The intent of this specification item is to crop and renew the reinforcing plates located at the stern of the vessel where the trawl cables have caused excessive wear.

2: TECHNICAL DESCRIPTION:

2.1 General

1. Contractor and CG TA shall agree upon areas in need of renewal prior to work commencing. For bidding purposes the Contractor shall bid on renewing 40 ft^2 of plating, and also quote a price per square foot for adjustment purposes.

2. Contractor shall crop away the agreed upon existing steel plates and re-install as per the original arrangement.

3. All new plating shall be 5/16th" LR Grade A Mild Steel plate or equivalent.

4. All steel plating shall be contractor supplied. Three (3) copies of mill certificates for all contractor supplied steel are to be given to the CGTA.

5. Contractor shall also re-weld any edges or gauges in the existing doubler plates, which are not being renewed, where the cable has worn down the original material

6. Where applicable, the operator and work shall be effectively protected against the direct effects of wind rain and snow. Gas metal arc welding shall not be done in a draft or wind of greater velocity than 4 knots (7.4 km/hr) unless a shelter protects the weld. Similar protection is to be provided for other welding processes less vulnerable to the adverse effects of wind. All shelters and work areas shall be equipped with heaters sufficient to maintain an ambient air temperature within the shelter of 5^0C or above. The heaters will not be connected to the vessel's electrical power supply system.

7. The Contractor shall visually inspect all welds for proper size, contour, good appearance and freedom from excessive porosity. In addition, welded joints shall be Contractor-tested by an approved non-destructive test method to the extent required by TCMSB. All detected defects shall be cut out, re-welded and re-tested to the satisfaction of the TCMSB and CG TA inspectors.

8. Contractor shall grind smooth any built up or renewed areas to prevent gear damage.

9. All new and disturbed steel surfaces shall be power-tool-cleaned to SSPC-SP-3 standard, and primed and top-coated in accordance with specification item **HD-15 Above Waterline Hull Painting.**

10. Contractor shall quote on three (3) hours use of a person lift & operator to allow CG TA to inspect stern ramp before, during, and after work is completed. Contractor shall also quote an hourly rate for person lift & operator for price adjusting purposes.

HD-14 – Stern Ramp Repairs

2.2 Location

Stern ramp, doubler plates & areas in between.

2.3 Interferences

1. Contractor is responsible for the identification of any interference items, their temporary removal and storage and refitting to the vessel. This includes any items in way of providing a proper fire watch on all affected spaces.
2. Contractor is responsible for protecting surrounding area and equipment while carrying out this work.

3: REFERENCES:

3.1 Guidance Drawings/Nameplate Data

1. Drawing: 108/01 Shell Expansion & Framing
2. Drawings: 110/03 Unit No 32 Upper Stern Unit 1of3 to 3of3
3. Drawing: 110/01 Stern Units No 14 & 15 1of3

3.2 Standards and Regulations

1. Contractor is required to abide by the Fleet Safety and Security Manual provisions for Hot Work, and Fall Protection and/or follow an equivalent safety management system. Task Hazard assessments will be performed prior to work commencing each working day.
2. Any necessary welding shall be performed to CWB 47.1 and visually inspected by a qualified welding supervisor.
3. Any item of work involving the use of heat in its execution requires that Contractor shall advise Chief Engineer before starting such heating and upon its completion.

a. Contractor shall provide suitable fire retardant coverings to protect wire ways, cables, equipment and structure from welding slag, splatter etc. in all surrounding areas.
b. Contractor shall provide sufficient suitable fire extinguishers and a fire watches during any such heating and until the work has cooled.
c. Ship's extinguishers shall **not** be used except in an emergency.
d. Contractor shall service and shall refill any ship's extinguisher used under such conditions

3.3 Owner Furnished Equipment

N/A

4: PROOF OF PERFORMANCE:

4.1 Inspection

1. Contractor shall allow adequate time and availability for inspection whenever required by this specification.
2. The attending TCMSB inspector shall determine the test method. All tests shall be witnessed by the attending TCMSB inspector and the CGTA

4.2 Testing

1. The attending TCMSB inspector shall determine the test method. All tests shall be witnessed by attending TCMSB inspector and CGTA

4.3 Certification

1. Contractor shall ensure TCMSB inspector approves all repairs conducted.

5: DELIVERABLES:

5.1 Reports, Drawings, and Manuals

1. Contractor shall supply CG TA with 2 copies of final report detailing all steel work repaired.
2. Contractor shall supply CG TA with 2 copies of weld test results, and 3 copies of all mill certificates.

5.2 Spares

N/A

5.3Training

N/A

HD-15 – Above Waterline Hull Painting

1: SCOPE:

The intent of this specification items is to paint the Above Water Hull portion of the ship & all of its specific markings.

2: TECHNICAL DESCRIPTION:

2.1 General

1. All topside areas of hull as described below shall be; cleaned, prepared, primed and painted in accordance with the ship's existing color scheme.

2. All topside area of outer hull, from top of underwater hull coating (Refer to Specification Item **HD-03 Underwater Hull Painting**) to top of bulwark edge, including fore deck bulwark and side plating in way of the stern ramp & stern ramp area aft of the stern gate shall be pressure washed clean in conjunction with initial cleaning of underwater hull. Care shall be taken not to paint areas requiring building up with weld as stated in Specification Item HD-17 Stern Ramp Repairs.

3. The total area to be painted is 6,000 square feet. NOTE: If Bidders have any doubt about the specified topsides area, their concerns are to be promptly brought to the attention of PWGSC and the CCG Technical Authority, along with supporting measurements and I or calculations, prior to submission of bids.

4. Entire topside area, described above shall be brush-off sandblast cleaned to SSPC- SP-7 standard. Any bare or corroded areas revealed shall be subsequently blasted to near white SSPC-SP-10 standard. Areas blasted to near white shall be feathered back a minimum of 150 mm to sound and fast coating material. If feathering is not achievable by blasting, all said areas shall be feathered by power tool grinding. Contractor shall quote on blasting 40% of the topside surface area to near white standard.

5. The following painting schedule shall be supplied and applied by the Contractor:

   First Coat: 3 mils D.F.T., INTERPRIME 198 – Grey

   Second Coat: 3 mils D.F.T., INTERPRIME 198 – White.

   Third Coat: 2 mils D.F.T., INTERSHEEN 579 – Storm Grey.

   Fourth Coat: 2 mils D.F.T., INTERSHEEN 579 – Colour to Match Existing: CCG Red (RAL 3000); White (RAL 9003); Beige (RAL 1001); Black (RAL 9004)

6. All draft marks, load lines, white strips, and hull markings shall be painted to match existing scheme with "RAL" colours to match requirements of CCG Identity Program. The two (2) forward anchor pockets shall be given two (2) coats of INTERLAC 665 CLY 999 – Black to total D.F.T. of 4 mils. All top side originally black trim including, but not limited to, rubbing strakes, Foc'sle bulwark trim, fairleads, and Coast Guard stripe trim, shall be cut in and coated with two (2) coats of INTERLAC 665 CLY 999 – Black to total D.F.T. of 4 mils.

7. Contractor shall plug all deck scuppers and discharges as well as taking other measures necessary to prevent any liquids from contaminating areas being prepared or coated. Contractor shall also take measures to ensure no damage, unnecessary cleaning or any repairs result from either the hull preparation process or coating applications. Measures shall also be taken to ensure that surfaces and equipment other than those specified are not coated by over spray, and that any inlets or discharges in the shell shall not be blocked by the coating.

8. Deck machinery and other equipment susceptible to damage by grit or coating material shall be protected. All portholes, hull doors, freeing ports, hull opening, anodes, transducers, shafts and propellers shall be covered by suitable materials to prevent damage or entry of materials while sandblasting or when painting is in progress.

9. Contractor shall strictly follow the manufacturer's requirements in relation to storage, preparation, application, etc. of the paint system described in this specification. Any requirement for variance from manufacturer's instructions shall be approved by the CG TA prior to proceeding.

10. Contractor shall utilize the services of the same International Paints FSR which is detailed in specification item **HD-03 Underwater Hull Painting**. One allowance will be paid for these services, and therefore both painting specifications shall be completed concurrently to minimise the overall costs incurred for the FSR.

11. Paint shall not be applied in rain, snow, fog or when the steel surface is less than 3 degrees Celcius above the dew point. Similarly paint shall not be applied to wet, frosted or ice coated surfaces.

2.2 Location

Ships Above Waterline Hull.

2.3 Interferences

1. Contractor is responsible for the identification of any interference items, their temporary removal and storage and refitting to the vessel.
2. Contractor is responsible for protecting surrounding area and equipment while carrying out this work.

3: REFERENCES:

3.1 Guidance Drawings/Nameplate Data

Drawings:

- VHBA2_034-06 Freeboard Marking
- VHBA2_180-01 Painting Schedule
- VHBA2_180-03 Ship’s Name Port of Registry
- VHBA_180-04 Details of Fwd. and Aft Draft Marks

3.2 Standards and Regulations

35T

3.3 Owner Furnished Equipment

N/A

4: PROOF OF PERFORMANCE:

4.1 Inspection

Inspection of all specified methods & standards of application as defined in Technical Description. Visual Inspection for runs/defects in paint by CG TA.

4.2 Testing

WFT & DFT readings as described in Technical Description.

4.3 Certification

N/A

5: DELIVERABLES:

5.1 Reports, Drawings, and Manuals

1. The Contractor shall utilize a Quality Assurance (QA) system during all phases of the specified work. As a minimum, this QA system shall include the measurement and/or recording of the following data:
    a. The batch numbers of all coatings with corresponding dates of manufacture.
    b. The type and quantity of any solvents added.
    c. The ambient conditions during all phases of coatings application.
    d. Surface profile measurements taken after completion of surface preparation.
    e. Surface contamination measurements, particularly chloride (salt) readings.
    f. Details of application equipment, including spray tips and pressures where applicable.
    g. Wet Film Thickness (WFT) gauge readings shall be taken and recorded on a regular basis during coatings application. The WFT measurements shall be recorded with locations referenced to a sketch of the ship.
    h. Dry Film Thickness (DFT) gauge readings shall be taken and recorded on a regular basis after coatings application. The DFT measurements shall be recorded with locations referenced to a sketch of the ship.
2. All recorded information shall be typewritten in English and three (3) copies shall be given to the Chief Engineer.

5.2 Spares

N/A

5.3Training

N/A

H-01 – Berthing

1: SCOPE:

During the contract period at Contractor's facilities, while not in dock, the vessel shall be berthed at Contractor's wharf at a safe and secure berth with adequate water at extreme low tide to ensure that the vessel will not touch bottom.

2: TECHNICAL DESCRIPTION:

2.1 General

1. The vessel will be delivered to the Contractor's facility under its own power.
2. Contractor shall include in the overall quote, all costs for initial tying up, any movement of the vessel during refit, and letting go of lines from Contractor 's wharf on departure after completion of contract.
3. Maneuvering of the vessel into and out of Contractor's docking facilities shall be done under the direction of Contractor. Costs for tugs and pilots required for any movements of the vessel during the contract period shall be included in the bid price quoted, but shown separately as well.
4. Contractor shall include in their bid the cost of a tug if required for movement of the vessel while tying up at the contractor facilities before and after and the docking.
5. One gangway shall be supplied and set up by Contractor while alongside the Contractor's jetty. The gangway shall be set up and rigged from the wharf onto the Foc'sle deck. The gangway shall be complete with safety net. Gangway shall be safe, well lit and structurally sufficient to support passage of Contractor's workmen and ship's crew.

2.2 Location

N/A

2.3 Interferences

N/A

3: REFERENCES:

3.1 Guidance Drawings/Nameplate Data

1. **Vessel Particulars:**

Length Overall	165.00'
Length B.P.	144.67'
Breadth Moulded	36.00'
Depth Moulded	14.75'
Draft (Mean)	13.20'
Displacement	925 tons

3.2 Standards and Regulations
N/A

3.4 Owner Furnished Equipment
N/A

4: PROOF OF PERFORMANCE:

4.1 Inspection
N/A

4.2 Testing
N/A

4.3 Certification
N/A

5: DELIVERABLES:

5.1 Reports, Drawings, and Manuals
N/A

5.2 Spares
N/A

5.3Training
N/A

H-02 – Emergency Boat Davit Inspection

1: SCOPE:

The intent of this specification is to survey Schat Harding Lifeboat Davit system, for a Marine Safety quadrennial inspection and testing.

2: TECHNICAL DESCRIPTION:

2.1 General

1. **NOTE:** For clarification, the role of SCHAT FSR (Harding Safety Canada) is to (1) provide guidance on the correct disassembly / reassembly, and removal / installation of davit; (2) examine and measure all components as part of condition assessment of davit; (3) report findings and recommendations in a written inspection report; (4) oversee required repairs (to be treated as part of the 1379 work arising); (5) interact with TCMSB; (6) witness the functional and load testing of the davit; and (7) produce the specified service report. **All other labour and services required for the removal, transport, disassembly, repair, reassembly, installation and testing of the davit shall be provided by the Contractor or his Sub-Contractor.**

2. SCHAT Emergency Boat Davit, Type MOB 350/3.65/10E, located aft on "D" Deck (Forcsle) at Frames 35 - 37, Portside, is a hand-cranked slewing, fixed-height, crane-type davit that is due for TCMSB quinquennial survey.

3. Davit inspection includes a requirement for a condition assessment to be performed during the disassembly specified herein. The condition assessment shall be conducted by an authorized SCHAT service agent (FSR) who will provide a written Inspection Report to Contractor, CG TA and PWGSC Contracting Authority. The report shall include records of all measurements taken, note all findings, and state any additional repairs not included in the inspection requirements below.

4. Shepparding boat shall be removed by Contractor for storage. Contractor shall provide all equipment, manpower, etc. to remove and land Shepparding boat ashore and place it Contractor supplied boat chocks ashore. Contractor shall store Shepparding boat in a location in Contractor facility where it will not be damaged or painted by overspray from painting and/or grit-blasting. Contractor is responsible for any damage to Shepparding boat. Contractor is also responsible for placing Shepparding boat back on ship when necessary.

5. Contractor shall include an allowance of $10,000 to cover work of Schat FSR. FSR provider will be reimbursed for actual costs reasonably incurred in the performance of this work. Travel and living expenses shall be billed at cost without added overhead or profit. The $10,000 allowance shall form part of the overall bid, and shall be adjusted by PWGSC 1379 action upon receipt of final Schat FSR invoice supported by copies of all related documentation to verify actual expenses.

6. Scheduling of FSR shall be responsibility of Contractor, and will be discussed with CG TA to determine duration and scope of work, including any additional FSR requirements. The intent

is to ensure that there is little to no idle time for FSR in order to progress the work as quickly and efficiently as possible for the funds being expended. It is expected that Contractor will schedule all work in the most efficient and continuous manner possible.

7. Contractor shall call TCMS inspection services when required. CG TA shall be notified in advance when inspections are to be completed.

8. Chief Engineer shall be allowed to monitor work of Schat FSR who shall contact the Chief Engineer each day that he is working on this requirement and keep him advised on findings and progress.

9. RRH 15 Emergency Boat Release shall be removed and replaced by a new GSM supplied unit.

10. Mounting bolts where davit column is bolted to focsle deck seat shall be removed and cleaned for inspection and measurement.

11. Contractor shall remove wire rope from davit winch for TCMS inspection. After inspection, wire rope shall be coiled and safely stored, so that it is protected from dirt and damage.

12. Contractor shall ensure that power to electric winch motor is shut off and prominently tagged on Emergency Switchboard (H-02-2.11) prior to commencement of work. Before start of work and after completion, megger, volts and amperage readings shall be taken for electric winch motor. Readings shall be recorded and witnessed by CG TA.

13. Winch motors shall be electrically and mechanically disconnected, and removed to a certified Electric Motor Service Specialist who shall open, clean and inspect all components. Contractor shall identify their Electric Motor Service Specialist in their bid.

14. Stator windings shall be cleaned using an approved method and dried. Insulation shall be inspected for cracking, softening, oil saturation, breaks or signs of overheating. Megger test readings of insulation resistance values shall be taken; minimum acceptance is 100 MegΩs.

15. Upon successful completion of the above tests, and any necessary repairs, stator windings shall be given a thin coat of air drying varnish, **GE 1202** or approved equal.

16. Davit column and arm (refer to below attached Davit Drawing) shall be cleaned up and examined for corrosion. Contractor shall quote on performing twenty (20) ultrasonic thickness measurements in way of observed corrosion plus ten (10) shots in areas of sound steel for comparison purposes, for a total of thirty (30) shots. Contractor shall also quote a rate per shot for 1379 PWGSC adjustment purposes.

17. Corrosion of davit column and arm shall be prepared, primed and painted according to SCHAT approved procedures. Top coat shall match the existing colour scheme. For bidding purposes, Contractors shall quote on preparing and painting 10 ft^2 of steel, plus a Unit rate for 1379 PWGSC adjustment purposes.

18. Winch gearbox oil shall be drained and disposed of according to federal and provincial regulations.

H-02 – Emergency Boat Davit Inspection

19. After removal of inspection cover plate, slewing gear shall be inspected by Schat FSR in presence of CG TA and TCMS Surveyor.

20. After removal of inspection cover plate, winch gearbox shall be inspected by FSR in the presence of CG TA and TCMS. Condition of lubricating oil shall be checked by sending out an Oil Analysis to a certified oil Laboratory.

21. Brake assembly shall be dismantled for inspection. All components shall be cleaned, measured, and laid out for FSR, CG TA and TCMS Surveyor.

22. Head sheave shall be dismantled for inspection. Sheave, pin, and bushing bore shall be cleaned, measured and made ready for inspection.

23. Remote control sheaves shall be cleaned, inspected, lubricated and proven to rotate freely.

24. All grease-ways and fittings shall be proven clear. All grease points shall be greased using EP2 lithium grease.

25. All limit switches (over-hoist and slewing) shall be checked for correct operation.

26. **All defects or additional repairs required shall be addressed by PWGSC 1379 procedures.**

27. Davit and its components shall be re-assembled in good working order. If it has been removed from the ship, it shall be re-installed. Gearbox is to be refilled with Spartan EP 150 oil.

28. A new GSM supplied wire rope is to be installed.

29. All work shall be completed to satisfaction of Schat FSR, CG TA and TCMSB Inspector.

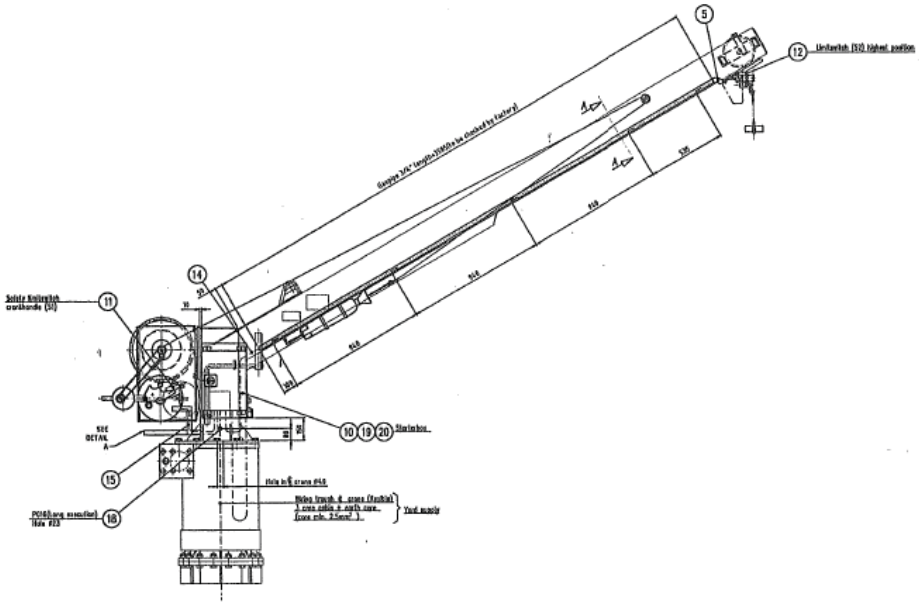

Figure 1 -SCHAT-HARDING TYPE MOB 350/3.65/10E DAVIT

2.2 Location

"D" Deck (Focsle), Port Side Frames 35-37

2.3 Interferences

1. Contractor is responsible for the identification of any interference items, their temporary removal and storage and refitting to the vessel.
2. Contractor is responsible for protecting surrounding area and equipment while carrying out this work

3: REFERENCES:

3.1 Guidance Drawings/Nameplate Data

1. SCHAT Installation, Operation & Maintenance Manual
   Type: FME 194 H
   Order No. 2009191
   Serial No. 1158/01
   Certificate No. BGN0100078
   Type Appr. No. SAS S010033
   TM: 2.91kNm
   SWM: 1.94kNm

3.2 Standards and Regulations

1. The following Coast Guard Standards and or Technical Bulletins must be adhered to in the course of executing this specification. Copies of these standards and bulletins can be obtained from the CCG Technical Authority.
   a. Canadian Coast Fleet Safety Manual (DFO 5737)
   b. Coast Guard ISM Lock Out/Tag Out Procedures
2. Contractor shall refer to General Notes for any other relevant standards and regulations.

2.3 Owner Furnished Equipment

1. Emergency Boat Release Hook
2. Wire Rope

4: PROOF OF PERFORMANCE:

4.1 Inspection

All inspections of components and work to be completed by Schat FSR, TCMSB Inspector & CG TA.

4.2 Testing

1. Upon completion of all work Contractor shall carry out operational testing and system load testing. Contractor shall supply certified weights as well as all appliances, hardware, and manpower necessary to load test the system using certified weights. All test equipment used, as well as weights, shall have verification and applicable test certificates and Contractor shall show these to Schat FSR, TCMS Surveyor or Chief Engineer as requested. Equipment, materials, etc not having applicable certification shall not be used, and testing shall not proceed until as such time as FSR authentication can be provided.

2. Prior to load testing, davit system shall be proven operational.
3. It shall be functionally tested and load tested in the presence of Schat (Harding Safety Canada) FSR, Chief Engineer and TCMSB Inspector as follows:

   Safe Working Load (SWL) = 10 KN = 2,248 lbs.
   Static Test Load = 2,810 lbs. (125% of SWL)
   Dynamic Test Load = 2,472.8 lbs. (110% of SWL)

4.3 Certification

TCMSB Inspector to sign off unit in Vessel's blue book for Div III reports.

5: DELIVERABLES:

5.1 Reports, Drawings, and Manuals

1. A detailed report including all work carried out, shall be provided to CG TA.
2. A paint quality assurance report shall be provided for each layer of paint applied.
3. A test report shall be provided to CG TA indicating all tests performed, time of test, weights used, and duration of tests.

5.2 Spares

1. Removed Wire Rope and Emergency Boat Release Hook shall be returned to CG TA.

5.3Training

N/A

H-03 – HIAB

1: SCOPE:

The intent of this scope is to have the Starboard HIAB 201-2 crane removed, overhauled and inspected, reinstalled, and tested for TCMSB 5 year inspection.

2: TECHNICAL DESCRIPTION:

2.1 General

NOTE: For clarification, the role of the HIAB FSR is to (1) provide guidance on the correct disassembly/reassembly, and removal/installation of the crane; (2) examine and measure all components as part of the condition assessment of the crane; (3) report findings and recommendations in a written inspection report; (4) oversee required repairs (to be treated as part of the 1379 work arising); (5) interact with TCMSB; (6) witness the functional and load testing of the crane; and (7) produce the specified service report. **All other labour and services required for the removal, transport, disassembly, repair, reassembly, installation and testing of the crane shall be provided by the Contractor or his Sub-Contractor.**

1. Contractor shall include an allowance of $10,000 to cover the work of the FSR. FSR provider will be reimbursed for actual costs reasonably incurred in the performance of the work. Travel and living expenses shall be billed at cost without added overhead or profit. The $10,000 allowance shall form part of the overall bid, and shall be adjusted by PWGSC 1379 action upon receipt of the final FSR invoice supported by copies of all related documentation to verify actual expenses.

2. The scheduling of the FSR shall be the responsibility of Contractor, and will be discussed with the CGTA to determine duration and scope of work including any additional FSR requirements. The intent is to ensure that there is little to no idle time for the FSR in order to progress the work as quickly and efficiently as possible for the funds being expended. It is expected that Contractor will schedule all work in the most efficient and continuous manner possible.

3. HIAB Cranes are sold in Canada by Atlas Polar Company Ltd. of Toronto (Toll-Free: 1-888-799-4422) which has a country-wide network of sales and service dealers (See www.atlaspolar.com).

4. The crane's hydraulic power pack shall be inspected by a certified hydraulic technician who shall report all findings in writing to the Contractor, CGTA and PWGSC. Inspection Report shall note all findings and state any additional repairs required.

5. CGTA shall be allowed to monitor the work of the FSR who shall contact CGTA each day that he is working on this requirement and keep him advised on findings and progress.

6. Mounting bolts where the crane base is bolted to the pedestal and where the pedestal is bolted to the deck seat shall be removed and cleaned for inspection and measurement.

7. Contractor is to arrange for a TCMSB inspector to be present when required, and CGTA is to be notified prior to TCMSB inspections being done.

8. Luffing cylinder heel and head pins shall be removed.

9. Boom extension system shall be disassembled, and all wearing parts shall be cleaned for inspection with measurements taken and recorded.

10. Crane boom sections shall be cleaned and examined for corrosion. This includes the inner boom and the three (3) outer boom sections.

11. Contractor is to quote on performing forty (40) ultrasonic thickness measurements in way of observed corrosion plus ten (10) shots in areas of sound steel for comparison purposes, for a total of fifty (50) shots. The Contractor shall also quote a rate per ten (10) shots for adjustment purposes.

12. Observed corrosion of the boom sections shall be prepared, and painted according to HIAB-approved procedures for ship-mounted cranes. Top coat shall match the existing colour scheme. For bidding purposes, Contractors shall quote on preparing and painting 20 ft^2 of steel, plus a unit rate for adjustment purposes.

13. All HIAB markings including SWL shall be renewed on crane after painting. Markings shall be OEM equivalent using CFM.

14. Hydraulic ram arrangement is to be let-go and removed for dismantling, cleaning and inspection. All ram seals shall be renewed.

15. Boom pivot shaft is to be removed and cleaned for inspection and measurement.

16. The pin securing the boom head sheave shall be removed and cleaned for inspection and measurement.

17. Slewing ring gear is to be inspected.

18. All greaseways and fittings are to be proven clear.

19. All dismantled components shall be cleaned, measured, and laid out for TCMSB inspection. All shaft and pin bores and through-ways shall be cleaned, measured and made ready for inspection.

20. All defects or additional repairs required shall be addressed by PWGSC 1379 procedures**.**

21. The crane and its components shall be re-assembled in good order. If it has been removed from the ship, it shall be re-installed. The installed crane shall be functionally tested in the presence of the CGTA and HIAB FSR.

22. HIAB crane shall be fitted with new GSM wire complete with hook attached and a snatch block. A new CFM head pin and hook will also be installed.

23. Following reassembly and successful completion of the functional testing, the crane shall be Proof Load Tested (5960 lbs.) in the presence of a TCMSB Inspector, CGTA and HIAB FSR.

2.2 Location

Foc'sle deck aft, starboard side, frames 7-10

2.3 Interferences

1. Contractor is responsible for the identification of any interference items, their temporary removal and storage and refitting to the vessel.
2. Contractor is responsible for protecting surrounding area and equipment while carrying out this work.

3: REFERENCES:

3.1 Guidance Drawings/Nameplate Data

1. HIAB 201-2
   Serial # S201000039
   Manual is available on ship upon request

3.2 Standards and Regulations

1. Canada Shipping Act, 2001, Part III of the Cargo, Fumigation and Tackle Regulations

3.3 Owner Furnished Equipment

1. CG will supply a new wire c/w hook attached and a snatch block. All other parts including head pin and hook to be contractor supplied.

4: PROOF OF PERFORMANCE:

4.1 Inspection

1. All work shall be inspected and completed to the satisfaction of CGTA, HIAB FSR and TCMSB.

4.2 Testing

1. The crane shall be Proof Load Tested (5690 lbs.) in the presence of a TCMSS Surveyor, CGTA and HIAB FSR.

4.3 Certification

1. HIAB FSR to provide certification certificate.
2. HIAB crane is to pass requirements of Canada Shipping Act, 2001, in Particular Part III of the Cargo, Fumigation and Tackle Regulations.

5: DELIVERABLES:

5.1 Reports, Drawings, and Manuals

1. Upon completion of all work Contractor shall produce a Service Report that includes records of all repairs performed & measurements taken. Three (3) copies of the Service Report shall be provided to CGTA.
2. HIAB FSR shall provide a written Inspection Report to Contractor, CGTA and PWGSC. The report shall include records of all measurements taken, note all findings, and state any additional repairs not included in the inspection requirements

H-03 – HIAB

3. Form T2 (Certificate of Test and Thorough Examination of Lifting Appliances) from TCMSB for the re-installed and inspected crane shall be provided to CGTA.

5.2 Spares

1. Removed wire, hooks, snatch block and head pin shall be returned to CG TA.

5.3Training

N/A

H-04 – #1 Fuel Tank Vent Renewal

1: SCOPE:

The intent of this specification item is to renew the stand pipes on the #1 Fuel Tank Vents located on the Port & Starboard sides of the bow.

2: TECHNICAL DESCRIPTION:

2.1 General

1. Contractor shall carry out this task in conjunction with specification item **HD-07 Fuel Tanks Survey**.
2. Once the tank has been opened up & certified gas free and "Safe for Hotwork", the port and starboard fuel tank vents located on the ship's bow shall be cut off at deck level.
3. The old stand pipes shall be unbolted from the vent heads and the vent heads re-used with the new stand pipes.
4. Prior to installation, the vent heads shall be disassembled, grit blasted, reassembled, and painted in accordance with the coatings outlined for the above water hull scheme.
5. The renewed vent heads are to be fitted with new Contractor supplied flame trap screens.
6. Contractor shall supply and install new stand pipes constructed from schedule 40 seamless steel pipe, complete with mating flanges compatible with the current vent flanges.
7. New Stand pipes shall be cleaned of any welding and grinding debris prior to pressure testing the tank for TCMSB credit.
8. After obtaining TCMSB credit, the stand pipes shall be painted in accordance with the coatings outlined for the above water hull scheme in specification item **HD-15 Above Waterline Hull Painting**.
9. Vent heads shall be secured to the new stand pipes using new CFM gaskets & stainless steel fasteners.
10. Contractor is to ensure that any dirt or debris resulting from this work is cleaned and removed from the #1 Fuel Tank prior to it being closed up for specification item **HD-07 Fuel Tanks Survey**.

2.2 Location

Upper Deck forward, Port & Starboard sides.

2.3 Interferences

1. Contractor is responsible for the identification of any interference items, their temporary removal and storage and refitting to the vessel.
2. Contractor is responsible for protecting surrounding area and equipment while carrying out this work.

H-04 – #1 Fuel Tank Vent Renewal

3: REFERENCES:

3.1 Guidance Drawings/Nameplate Data

N/A

3.2 Standards and Regulations

1. Contractor is required to abide by the Fleet Safety and Security Manual provisions for Hot Work, Confined Safe Entry and Fall Protection and/or follow an equivalent safety management system. Task Hazard assessments will be performed prior to work commencing each working day.
2. Any necessary welding shall be performed to CWB 47.1 and visually inspected by a qualified welding supervisor.
3. Any item of work involving the use of heat in its execution requires that Contractor shall advise Chief Engineer before starting such heating and upon its completion.
    a. Contractor shall provide suitable fire retardant coverings to protect wire ways, cables, equipment and structure from welding slag, splatter etc. in all surrounding areas.
    b. Contractor shall provide sufficient suitable fire extinguishers and a fire watch during any such heating and until the work has cooled.
    c. The Ship's extinguishers shall **not** be used except in an emergency.
    d. Contractor shall service and shall refill any ship's extinguisher used under such conditions
4. Contractor is responsible for arranging for a certified Marine Chemist to visit the vessel and to carry out the necessary testing to obtain safe for hot work certificates.

3.3 Owner Furnished Equipment

N/A

4: PROOF OF PERFORMANCE:

4.1 Inspection

Inspections to be conducted by TCMSB and CG TA.

4.2 Testing

Pressure test is to be completed on the tank, in conjunction with specification item HD-07 – Fuel Tanks, once stand pipes are welded as per TCMSB requirements.

4.3 Certification

Contractor is responsible to ensure the TCMSB Inspector signs off the tank inspection in the vessel's Hull and Machinery Survey Record Book and Division 3.

5: DELIVERABLES:

5.1 Reports, Drawings, and Manuals

1. Contractor shall provide a copy of all test certificates to CG TA.

5.2 Spares

N/A

H-04 – #1 Fuel Tank Vent Renewal

5.3Training

N/A

H-05 – Cable Transit Repairs

1: SCOPE:

The intent of this specification item is to renew seventeen (17) cable transits located on the trawl deck.

2: TECHNICAL DESCRIPTION:

2.1 General

1. Contractor shall identify and electrically isolate & lock out each of the 17 cables passing through transits requiring replacement.

2. Contractor shall disconnect the equipment or source (Contractors choice as to which is easiest) of each cable passing through the 17 specified cable transits on the trawl deck and pull the cables through the existing transits. Contractor shall ensure each cable and wire is appropriately labelled as to where it was fitted and shall note which transit it was passed through to ensure correct reconnection.

3. Contractor shall crop each of the cable transits flush at deck level.

4. The deck area surrounding the 10 transits around frame 5 starboard shall be cropped out with a radius of no less than 12” from any transit. A new plate shall be installed, matching the original plate thickness and grade.

5. Contractor shall fabricate a box, measuring approximately 16”h x 12”w x 12”l. This box shall be fitted with a “Roxtec S” type frame (4x1) to the aft side of the box. A 9” x 9” hole shall be cut on the forward end of the box, and fitted with a bolt-on cover complete with gasket, to allow easy access for cable installation. This box shall be welded to the deck in the original location of the 10 removed transits. The bottom of this box and the deck area under the box shall be left open to allow cable passage.

6. Contractor shall cover the affected areas and tape edges to ensure no areas are left open to the elements unless that section is actively being worked on.

7. All cables passing through the 10 removed transits shall pass through the new Roxtec arrangement. Contractor shall install all required fixtures to properly seal the transit in accordance with manufacturer recommendations. Each of the cables shall be reconnected to its original termination point.

8. All remaining cable transits (7 total, various locations), shall be replaced with new steel pipe of similar dimensions and grade as original. New transits shall be fitted with new watertight metallic cable glands (approved for outdoor marine use) on either end. Contractor shall pass existing cable through the new transits and reconnect to their original termination point.

9. Contractor shall feather out damaged areas of paint coatings.

10. Contractor shall paint affected deck surfaces as follows:

    a. **First Coat**: Intershield 300, Abrasion Resistant Aluminum Pure Epoxy, Colour = Aluminum, 5 mils D.F.T. in way of bared steel.

    b. **Second Coat**: Intershield 300, Abrasion Resistant Aluminum Pure Epoxy, Colour = Bronze, 5 mils D.F.T. in way of all areas.

    c. **Third Coat**: Intershield 9G, High Solids Epoxy Non-Skid Deck Coating, Colour = Dark Grey, 30 mils D.F.T. at thinnest point, Roller-Applied in a ridged pattern.

11. Contractor shall paint transits and the new transit box by applying one coat of primer followed by two coats of marine enamel. The first application of topcoat shall be of different color than the existing coating, followed by a finish coat of black enamel.

2.2 Location

1. Trawl Deck, see image below for locations:

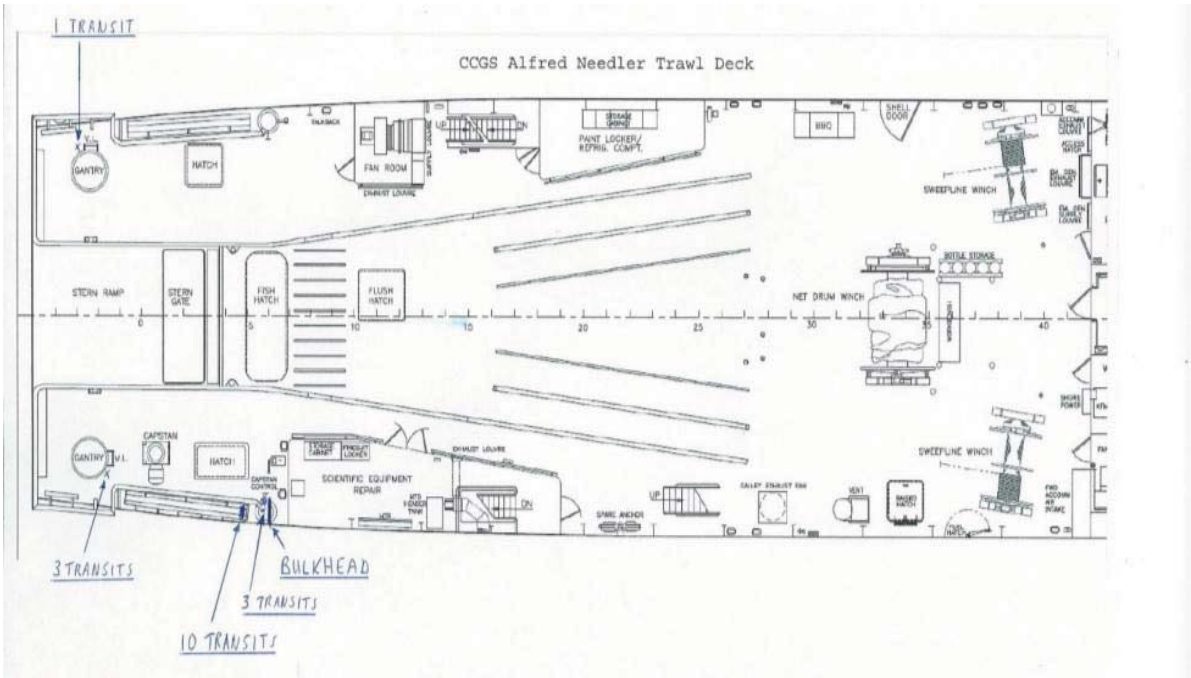

2.3 Interferences

1. Contractor is responsible for the identification of any interference items, their temporary removal and storage and refitting to the vessel. This includes any items in way of providing a proper fire watch on all affected spaces.
2. Contractor is responsible for protecting surrounding area and equipment while carrying out this work.

3: REFERENCES:

3.1 Guidance Drawings/Nameplate Data

1. See attached drawing above.
2. Ship will provide Contractor with a copy of Electrical Reference book.

3.2 Standards and Regulations

1. Contractor is required to abide by the Fleet Safety and Security Manual provisions for Hot Work, Confined Safe Entry and Fall Protection and/or follow an equivalent safety management system. Task Hazard assessments will be performed prior to work commencing each working day.
2. Any necessary welding shall be performed to CWB 47.1 and visually inspected by a qualified welding supervisor.
3. Any item of work involving the use of heat in its execution requires that Contractor shall advise Chief Engineer before starting such heating and upon its completion.
    a. Contractor shall provide suitable fire retardant coverings to protect wire ways, cables, equipment and structure from welding slag, splatter etc. in all surrounding areas.
    b. Contractor shall provide sufficient suitable fire extinguishers and a fire watch during any such heating and until the work has cooled.
    c. The Ship's extinguishers shall **not** be used except in an emergency.
    d. Contractor shall service and shall refill any ship's extinguisher used under such conditions

3.3 Owner Furnished Equipment

1. Unless otherwise stated, Contractor shall supply all materials, labour, and equipment required to complete all specified work.

4: PROOF OF PERFORMANCE:

4.1 Inspection

1. After completion of all installation, contractor shall demonstrate to CGTA and TCMS that all welds and installations are watertight, in accordance with paragraph 4.2. Any deficiencies noted shall be repaired at Contractor's expense.

4.2 Testing

1. All deck penetrations and cable transits shall be tested as required by attending TCMSB.
2. Contractor shall use perform dye penetrant tests to all new welds to ensure watertight integrity.
3. All cable transits shall be hose tested to ensure watertight integrity.
4. All electrical equipment disturbed by this scope of work shall be fully tested for correct operation.

4.3 Certification

1. All weld procedures shall be approved by TCMSB prior to work commencing.
2. TCMSB shall inspect the completed installation as part of the vessel's Division 3 certification.

5: DELIVERABLES:

5.1 Reports, Drawings, and Manuals

1. Contractor shall provide CGTA with two copies of results from dye penetrant testing.

5.2 Spares

N/A

5.3Training

N/A

E-01 – Anchor Windlass

1: SCOPE:

The intent of this specification item is to remove the Anchor Windlass from the ship and complete a 5 year TCMSB survey on it.

2: TECHNICAL DESCRIPTION:

2.1 General

1. The HEPBURN anchor windlass, including gearbox, wildcat clutches and warping heads shall be disassembled by Contractor, and laid out for inspection by the CG TA and TCMSB.

2. Forward anchor windlass is a double wildcat, horizontal type. Two warping drums are fitted, one on each end of the main spindle. It is driven by an electric motor, through a totally enclosed, oil bath lubricated, triple reduction gearbox.

3. Prior to being disabled, the motor shall be tested as per section 4.2 of this specification.

4. Electric motor shall be electrically isolated, locked out and tagged at MCC breaker and disconnected at motor terminal box.

5. Anchor chains shall be removed from the ship as specified in specification item **E-02 Anchors & Chains**.

   NOTE: The costs associated with removal & re-installation of the Anchor Chains shall not be included in this specification item.

6. The entire Anchor Windlass assembly shall be unbolted & removed from the ship for disassembly & inspection by Contractor.

7. Deck area under windlass and windlass base shall be cleaned to SSPC-SP10 standard (Approximately 70ft^2).

8. Contractor shall renew five cable stand pipes located aft of anchor windlass base. Each new standpipe shall be of equal size and grade as original, and be fitted with a metallic watertight cable gland. Contractor shall ensure all cables are undamaged during this process, and ensure/verify watertight and electrical integrity of the completed installation.

9. After Anchor Windlass is removed, Contractor shall perform twenty ultrasonic thickness measurements in a grid pattern on the deck surface where windlass was attached. Thickness readings shall form part of the deliverables described in section 5.1 of this specification.

10. If deck plating is determined by CG TA to be too thin, plating renewals shall be completed by PWGSC 1379 action.

11. Cleaned deck area shall have the following painting schedule supplied & applied by Contractor:

a. **First Coat**: Intershield 300, Abrasion Resistant Aluminum Pure Epoxy, Colour = Aluminum, 5 mils D.F.T. in way of bared steel.

b. **Second Coat**: Intershield 300, Abrasion Resistant Aluminum Pure Epoxy, Colour = Bronze, 5 mils D.F.T. in way of all areas.

c. **Third Coat**: Intershield 9G, High Solids Epoxy Non-Skid Deck Coating, Colour = Red, 30 mils D.F.T. at thinnest point, Roller-Applied in a ridged pattern.

12. Gearbox shall be drained of all oil, inspection cover removed and back lash between gears shall be measured and witnessed by CG TA. These measurements shall be taken and recorded before removal of the electric motor. These measurements shall form part of the deliverables as described in section 5.1 of this specification. CG TA shall give approval prior to the electric drive motor being removed for overhaul.

13. Windlass is powered by a Siemens -1PB1-200 3 speed electric motor, rated at 10kW. Motor is fitted with an electromagnetic disc brake (Model 2LM2-028). The motor and brake assembly shall be electrically and mechanically disconnected and removed from the vessel / workshop for full overhaul and inspection.

    NOTE: If any Contractor does not have an electrical shop on site, they shall indicate the identity of their electrical sub-contractor as part of their bid.

14. Contractor is responsible for all aspects of motor removal, return and re-installation as per original, including removals and re-installations of interference items. Contractor shall take note of, identify and retain all shims which are present in way of the motor mount.

15. Motor shall be completely dismantled, cleaned with suitable approved solvents and lint-free rags, baked, and laid out for inspection. All insulation shall be inspected for cracking, softening, oil saturation, breaks, and signs of overheating. Stator windings shall be given a thin coat of motor winding varnish, GE # 1202 or equivalent.

16. After motor has been cleaned, insulation tests shall be taken on stator windings. Results of these tests shall form part of the deliverables as described in section 5.1 of this specification. A minimum value of 100 mega-ohms will be accepted.

17. Bearings and shafts in way of the running surfaces shall be inspected for wear and defects. Measurements shall be taken in both the horizontal and vertical planes, and shall form part of the deliverables as described in section 5.1 of this specification.

18. All bearings and gaskets shall be renewed.

19. Any defects shall be brought to the attention of CG TA. Any unspecified repairs and parts required shall be obtained through PWGSC 1379 action. Full information regarding all Contractor-supplied replacement parts shall be provided to the CG TA.

20. Once motor parts and components are ready for inspection, Contractor shall notify the CG TA and TCMSB so that a survey inspection can be performed.

E-01 – Anchor Windlass

21. When approvals have been completed, motor shall be reassembled in good order.

22. Both wildcat brake assemblies shall be let go and removed from the windlass for inspection and cleaning. All hinge pins, fulcrums and shafts shall be freed up, cleaned and grease ways proven clear. Contractor shall be required to supply and install new asbestos-free brake linings on brake bands. Contractor shall supply and fit new brass fasteners to hold the linings in place.

23. Clutch actuating levers shall be disconnected and removed for inspection and cleaning. All hinge pins and fulcrums shall be freed up and grease ways proven clear.

24. Warping drums shall be pulled from output shaft, cleaned up and their mounting surfaces, keys and keyways inspected.

25. Top cover of gear case shall be removed and main output shaft bearing halves shall be opened for inspection. Care shall be taken to positively identify all bearing components at time of removal to insure they are returned to their original positions at reassembly.

26. Outer support bearing caps shall be removed and top bearing halves inspected. Care shall be taken to positively identify all bearing components at time of removal to insure they are returned to their original positions at reassembly.

27. Output shaft shall be raised clear of bearing housings and fully supported. Bottom bearing halves shall then be inspected. Measurements shall be taken of shaft diameter at each bearing surface, in two directions, and recorded. Bearing halves shall be cleaned up and inside diameters measured at three locations (each half) and recorded. Bearing to shaft clearance to be determined and recorded. Two type written copies of all recorded measurements shall be passed to CG TA. CG TA shall be made aware of any excess wear or deficiencies with bearings as soon as possible once noted.

28. Reduction gear train shall be completely disassembled. All roller bearings (4) shall be removed and replaced with new CFM bearings. Interior of gearbox shall be wiped clean using lint free rags.

29. After inspection of gear train by CG TA and TCMS, Contractor shall supply and install anti-friction roller bearings, similar to those removed. Bearings and gears shall be installed in the gear case in good order.

30. When assembled, the gearing shall be rotated at least one full revolution by hand to prove gearing is running true and not binding. Contractor shall provide a type written list of specific bearing requirements for each location in gearbox to CG TA.

31. Anchor chain wildcats shall be removed from output shaft, cleaned up and their bearings and bearing surfaces inspected and measured.

32. Dog clutches shall be removed from shaft, cleaned up and their bearings and bearing surfaces inspected and measured. All measurements to be recorded and two type written copies passed to CG TA.

33. Main driving gear shall be cleaned up and carefully inspected for any sign of wear or damage.

E-01 – Anchor Windlass

34. All grease passages shall be proven clear and operational to satisfaction of CG TA.

35. After approval from CG TA and final inspection by TCMS, clutches, gypsies and warping drums to be reassembled onto output shaft in good order. Contractor shall ensure a sufficient quantity of lubrication is applied to all bearing surfaces prior to reassembly.

36. Output shaft bottom bearing halves shall be fitted into their respective positions and shaft lowered into position. Contractor is to ensure proper meshing of drive gear with intermediate gearing. Bearing top halves shall be fitted into their caps, bearing caps positioned and torqued down in their appropriate places. Shaft bearings and clutches shall be fully greased.

37. The output shaft shall be rotated a minimum of two (2) full rotations to prove the proper meshing of gearing and that the unit is free of binding, to satisfaction of CG TA.

38. Overhauled electric motor shall be reinstalled on windlass and full set of backlash readings shall be taken recorded. Two type written copies of backlash measurements shall be handed to the CG TA.

39. The entire windlass exterior shall be Commercial Blast SSPC-SP6 to remove all accumulated paint build up, rust, scale and debris. Contractor shall ensure all components of windlass are adequately protected from ingress of any debris resulting from cleaning. Any damage caused by such ingress shall be repaired at Contractor's expense.

40. Anchor Windlass base & five new stand pipes shall have the following painting schedule supplied & applied by Contractor:

    a. **First Coat**: Intershield 300, Abrasion Resistant Aluminum Pure Epoxy, Colour = Aluminum, 5 mils D.F.T. in way of bared steel.

    b. **Second Coat**: Intershield 300, Abrasion Resistant Aluminum Pure Epoxy, Colour = Bronze, 5 mils D.F.T. in way of all areas.

    c. **Third Coat**: Intergard 377, Abrasion Resistant Epoxy, Colour = Black, 5 mils D.F.T. in way of all areas.

41. All working threads, pins, bearing ends and grease fittings requiring routine lubrication in service, shall be protected from paint application.

42. Once reassembly is complete Contractor shall place anchor windlass on its base and torque it down using new CFM Grade 8 fasteners.

43. After re-installation on deck, CG TA shall witness backlash readings and given his approval, gearbox cover shall be reinstalled. Contractor shall supply and install new oil-proof jointing for top cover. Flange bolts shall be re-secured, using anti-seize compound on threads.

44. Contractor shall refill the gear case with new gear oil to the working level. Oil shall be Contractor supply – 62 litres ESSO SPARTAN EP 220 or CCG approved equivalent.

45. Brake bands and clutch actuating levers are then to be reinstalled and demonstrated to be in good working order. All threads and pivot points shall be running free and lubricated.

46. Contractor shall wire up electric motor as originally installed & remove active lock outs.

47. Anchor chains shall be installed on the wildcats once Specification Item E-02 is completed. Windlass shall be trialed again to ensure satisfactory operation of clutches and wildcats. A final test shall be done by lowering and raising each anchor and chain to the satisfaction of CG TA, again with motor current load being recorded.

48. Contractor shall advise TCMSB of work in progress and shall schedule inspections as required. Contractor shall include sufficient time for any additional testing required by TCMSB inspectors.

2.2 Location

Bow, upper deck forward

2.3 Interferences

1. Contractor is responsible for the identification of any interference items, their temporary removal and storage and refitting to the vessel.
2. Contractor is responsible for protecting surrounding area and equipment while carrying out this work.

3: REFERENCES:

3.1 Guidance Drawings/Nameplate Data

1. A copy of Hepburn Manual may be borrowed from Chief Engineer.
2. A copy of the Siemens electric motor (1PB1-200) and brake (2LM2-028) manual may be borrowed from Chief Engineer.
3. Contractor shall refer to International Paint specifications for proper application specifications. In the event of conflict between this specification and International Paint specifications, International Paint specification shall be followed.

3.2 Standards and Regulations

1. The following Coast Guard Standards and or Technical Bulletins must be adhered to in the course of executing this specification. Copies of these standards and bulletins can be obtained from the CG Technical Authority.
    a. Canadian Coast Fleet Safety Manual (DFO 5737)
    b. Coast Guard ISM Lock Out/Tag Out Procedures
    c. Coast Guard ISM Hot Work Procedures

3.3 Owner Furnished Equipment

1. Unless otherwise stated, all required materials shall be Contractor supply.

4: PROOF OF PERFORMANCE:

4.1 Inspection

As specified in section 2 Technical Description

4.2 Testing

1. The windlass shall be test run before disassembly, and again after complete reassembly. Final results shall be compared, and any deficiencies or degraded conditions shall be investigated and repaired at contractor's expense.
    a. Contractor shall take amperage readings of the motor. Starting current and the full load currents on each phase shall be recorded.
    b. Insulation Resistance (Megger) readings shall be taken on motor while it is electrically disconnected, and mounted to the base.
    c. Vibration analysis of the motor shall be performed. This shall be done with the system warm and motor running in a no-load condition.
2. Once windlass is installed, and before installation of anchor chains; windlass shall be run in each direction for a minimum of 15 minutes, with electric current draw on each of three phases being recorded. All bearings shall be monitored for signs of overheating. A load test shall be performed by using the warping drums to pull on a dock bollard, with motor current load being recorded. Testing shall be witnessed by CG TA and TCMS.

4.3 Certification

1. TCMSB is to sign off Anchor Windlass in Ships Survey Record Book and DIV III report.

5: DELIVERABLES:

5.1 Reports, Drawings, and Manuals

1. A copy of all test results shall be provided to Chief Engineer within 24 hours of any test taking place. This documentation may be in the form of photocopied handwritten notes.
2. A computer generated report shall be provided, containing all test results, paint application reports, and inspection results.
3. As described in Technical Description, any renewed components and sub-component parts or reference numbers shall be recorded and provided

5.2 Spares

N/A

5.3Training

N/A

E-02 – Anchors & Chains

1: SCOPE:

The intent of this specification item is to sandblast, inspect, and paint the vessels anchors & chains and to have them inspected by TCMSB for credit.

2: TECHNICAL DESCRIPTION:

2.1 General

1. Port and Starboard anchors and mooring chains shall be removed from ship for inspection and maintenance.
2. After lowering the anchors (2250lbs each) the bitter ends of both mooring chains shall be disconnected in the chain lockers and all chain shall be lowered and ranged. Chains are 28mm dia. (6 shots Port, 7 shots Starboard = 1171 feet total)
3. This work shall be carried out in conjunction with the Specification Items **E-01 Anchor Windlass**, **E-03 Chain Locker**, and if required, **E-05 Bitter End Modifications**.
4. Anchors and chains shall be thoroughly cleaned by high pressure fresh water wash (3000 psi minimum)
5. Once pressure washed, the anchors and cables shall be cleaned by abrasive sweep blasting to SSPC-SP7 standard
6. Once blasting is completed, anchors and chains shall be blown clear of all grit and debris, and kept in a clean and dry work area (area where elements are not affecting chain or painting process).
7. The first shot of chain currently connected to the anchor shall be unshackled from the anchor and the rest of the chain. That shot of chain is to be shifted and rejoined to the rest of the anchor chain at the bitter end. Contractor to include the price of removing and installing joining shackles.
8. Contractor shall take a complete set of measurements of the chain and provide them to CG TA and TCMSB before inspection. Measurements should be taken on random links equally spaced out over the shot with four (4) measurements per shot of chain. Measurements are to be average diameter of the chain as taken by measuring horizontally and vertically the link, then dividing the sum of the two measurements by two (2). Measurements taken are to be presented in a table to CG TA as part of the inspection of the chain.
9. Prior to painting, the Contractor shall arrange for TCMSB to inspect the anchors and chains, in the presence of the CG TA.
10. Contractor shall quote on repairing six (6) slack studs plus a unit rate for adjustment purposes. Swivels shall be cleaned, inspected for smoothness of operation, and properly lubricated.

11. Joining Shackles shall be painted red with equal number of white-painted links on either side. The number of white-painted links shall correspond to the number of shots from the anchor joining shackle. The outer end links of each white-painted set shall be marked by seizing wire, close hitched around the link stud. The number of turns of seizing wire should also correspond to the number of shots that they are marking. Painting shall be done shortly after completion of abrasive blasting, before chain can rust, and conditions shall comply with paint manufacturer's specifications.

12. Chains to be given two (2) coats of DEVOE Bar-Rust 235. Each coat to be of contrasting colour with the second coat being gloss black. Between each coat, cable is to be rolled 180 degrees.

13. Both anchors shall be given two (2) coats of DEVOE Bar-Rust 235. Each coat to be of contrasting colour with the second coat being gloss black.

14. Bitter ends of the chain shall be re-secured to bitter end connection points, while free ends are to be re-secured to anchors with Babbitt pellets. Center shackle pins shall be sealed with lead.

15. Anchors and Chains shall be re-stored in good order upon completion of all related specified work.

2.2 Location

Chain Locker, bow and engine room workshop.

2.3 Interferences

1. Contractor is responsible for the identification of any interference items, their temporary removal and storage and refitting to the vessel.
2. Contractor is responsible for protecting surrounding area and equipment while carrying out this work.

3: REFERENCES:

3.1 Guidance Drawings/Nameplate Data

Drawings:

511/03 Bitter End Details

511/04 1of2 & 2of2 Anchoring Arrgt & Details

3.2 Standards and Regulations

1. Acceptable wear of the chain as per Hull Inspection Regulations allows for a minimum diameter of 24.75mm on a 28mm chain.

3.3 Owner Furnished Equipment

Unless otherwise specified, all materials, labour and cranage are to be Contractor supplied.

4: PROOF OF PERFORMANCE:

4.1 Inspection

1. Inspections are to be carried out to the satisfaction of TCMSB and CG TA inspectors

4.2 Testing

1. Measurements of the anchor chains are to be taken as described in step #8 of the Technical Description.

4.3 Certification

1. Contractor is responsible to ensure TCMSB signs off all surveyed Anchors & Chains in the vessel's Survey Record Book and DIV III report.

5: DELIVERABLES:

5.1 Reports, Drawings, and Manuals

1. Contractor shall submit a report with all measurements as described in Technical Description step #8
2. Contractor shall supply the product data sheets and MSDS sheets on all products used during the course of this work (cleaning, coating, etc.).

5.2 Spares

N/A

5.3Training

N/A

E-03 – Chain Locker

1: SCOPE:

The intent of this specification item is to clean, inspect, and re-coat the chain locker to obtain TCMSB credit.

2: TECHNICAL DESCRIPTION:

2.1 General

1. Contractor shall open up the Chain Lockers (Frames 58 - 61) for TCMSB Inspection and survey.

2. This work shall be carried out in conjunction with the following Specification Items: **E-02 Anchors & Chains**, and if required **E-07 Bitter End Modification**.

3. Contractor shall provide all cranage, scaffolding, equipment, and transportation necessary to accomplish this work.

4. Prior to entering or working in the chain lockers, the Contractor shall obtain the necessary gas-free certificates for entry or hot work as appropriate. These certificates are to be renewed in compliance with the CG Fleet Safety Manual regulations. At all times, copies of the certificates are to be posted at the point of entry to the chain lockers with a second copy given to the CG TA.

5. The false bottoms of the chain lockers shall be removed and relocated as necessary to provide access to the work area. These shall be re-stowed in good order on completion of the inspection and any re-coating.

6. All internal surfaces of the Chain Lockers, including false bottom plates, shall be cleaned using high pressure fresh water washing (3000 psi minimum). Contractor to ensure that the sounding tube bottom is water washed in order to properly inspect it for wear. Chain Lockers to be pumped dry and wiped down with clean lint-free rags. All liquids, mud and debris shall be removed ashore by the Contractor.

7. All loose rust and loose scale shall be removed from all internal surfaces, including false bottom plates, to SSPC-SP3 standard. All debris shall be removed ashore by Contractor. All internal surfaces shall be vacuumed & wiped clean.

8. All internal steel surfaces & covers, prepared as described in paragraphs 6 and 7, shall be coated as follows:

   a. **First Coat:** Amercoat Pre-Primer 167, 40 microns D.F.T.;

   b. **Second Coat:** Amercoat Bar-Rust 235, buff colour, 125 microns D.F.T.;

c. **Third Coat:** Amercoat Bar-Rust 235, 125 microns D.F.T., to be applied according to manufacturer's recommendations to all edges, welds, and difficult to reach areas, colour to be contrasting to the second and fourth coats;

d. **Fourth Coat:** Amercoat Bar-Rust 235, off-white colour, 125 microns D.F.T.

9. Contractor shall contact TCMSB inspector when required. CG TA shall be notified at least 4 hours in advance of when inspections are to be done.

10. Contractor shall ensure chain locker is clean and free of debris before reinstalling all removed components in conjunction with specification items **E-02 Anchors & Chains**, and if required **E-07 Bitter End Modification**.

2.2 Location

1. The chain locker is located between frames 58-61. Access is through the Engine Room Workshop.

2.3 Interferences

1. Contractor is responsible for the identification of any interference items, their temporary removal and storage and refitting to the vessel.
2. Contractor is responsible for protecting surrounding area and equipment while carrying out this work.

3: REFERENCES:

3.1 Guidance Drawings/Nameplate Data

1. Drawing # 120/004 Tank Capacity Plan
2. Drawing # 532/02 List Of Manholes
3. Drawing # 703/04 Manhole Cover
4. Amercoat 235 Application Instructions

3.2 Standards and Regulations

1. The following Coast Guard Standards and or Technical Bulletins must be adhered to in the course of executing this specification. Copies of these standards and bulletins can be obtained from the CCG Technical Authority.
    a. Canadian Coast Fleet Safety Manual (DFO 5737)
    b. Coast Guard ISM Lock Out/Tag Out Procedures
    c. Coast Guard ISM Confined Space Entry Procedures

3.3 Owner Furnished Equipment

1. Unless otherwise stated, all materials, labour, and equipment required to complete all requirements of this specification shall be Contractor Supplied

4: PROOF OF PERFORMANCE:

4.1 Inspection

1. Contractor shall be responsible for the co-ordination of all inspections with TCMSB Surveyor, and produce an inspection schedule prior to commencement of work.
2. Upon completion of all repairs and testing, Contractor and CG TA shall conduct a final inspection and ensure chain locker, covers, and vents have been returned to operating conditions and the attending TCMSB Inspector has completed all inspections.

4.2 Testing

1. The attending TCMS Inspector shall determine the test method. All tests shall be witnessed by the attending TCMS Inspector and the CGTA.

4.3 Certification

1. Contractor is responsible to ensure the TCMSB Inspector signs off surveyed chain locker in the vessel's Hull and Machinery Survey Record Book and Division 3 report.

5: DELIVERABLES:

5.1 Reports, Drawings, and Manuals

1. Contractor shall supply the product data sheets and MSDS sheets on all products used in the course of this work (cleaning, coating).
2. Contractor shall provide a copy of all test certificates to CG TA.
3. Safety Management System forms and checklists shall be provided to CG TA

5.2 Spares

N/A

5.3Training

N/A

E-04 – Ventilation Cleaning

1: SCOPE:

The intent of this specification item is to clean the accommodation and Galley ventilation ducting at the end of refit period.

2: TECHNICAL DESCRIPTION:

2.1 General

1. Contractor shall clean the following ventilation systems as close to the end of the Refit Period as possible:

    a) Forward accommodation
    b) Aft accommodation
    c) Forward washrooms exhaust
    d) Aft washrooms and laundry exhaust
    e) Galley Exhaust Duct Cleaning

2. Contractor shall be responsible for the removal/installation of any deck heads in order to gain access to the ventilation trunking. Any items disturbed to gain access to certain areas shall be reinstalled in good order in its original location and condition.

3. Prior to commencing any work, Contractor shall lock and tag out each system supply/exhaust fan set. Contractor shall supply and install their own locking devices and keep possession of all keys during the scope of this work.

4. Contractor is responsible for the cleaning of all spaces, furniture, equipment, etc. that is contaminated or soiled during the work.

5. Presently some diffusers have been physically blocked with stuffing, etc. in various cabins and spaces. This has been carried out by various personnel without approval or knowledge of the spec writer. Contractor shall remove all blanks or plugs as they are encountered, and provide documentation to CG TA identifying all blockages encountered. These blanks shall not be replaced, such that all spaces will be served by ventilation and exhaust flow as applicable.

6. Contractor shall provide the services of a qualified HVAC representative to chemically and mechanically clean the vessel's ducting. All ducting shall be thoroughly cleaned of dust, dirt, debris, scale, rust, etc. These items shall be disposed of by Contractor.

7. With regards to dryer ducting it shall be cleaned starting at the dryer itself. There are 3 dryers located in laundry room and Contractor shall be responsible for gaining access to ducting and returning dryers to their original stowed position.

8. With regards to the Galley Exhaust Duct Cleaning:

    a) Contractor shall open up and clean galley exhaust plenum.

b) Contractor is responsible for the removal of all coverings in the galley to gain access to the trunking. The length of plenum runs from Galley plenum is located on trawl deck, starboard side. Run is about 5 feet, as the galley and stove is located directly below it.

c) Contractor is responsible for any rigging or scaffolding that maybe required.

d) Contractor is responsible for the cleanliness of immediate area during and after work is complete. Contractor is responsible for the removal of all cleaning materials and debris.

e) Range Hood and trunking shall be chemically and/or steam cleaned. All dirt, grease, debris, and cleaning fluids shall be trapped and shall be removed ashore and disposed of by Contractor

f) The range hood filter screens shall be removed and steam cleaned

g) Contractor is responsible for closing and resealing air tight all access covers disturbed during ducting cleaning and inspection, upon completion of work.

9. All work shall be completed to satisfaction of CG TA.

2.2 Location

1. Access to the ventilation system is throughout all areas of the ship.

2.3 Interferences

1. Contractor is responsible for the identification of any interference items, their temporary removal and storage and refitting to the vessel.
2. Contractor is responsible for protecting surrounding area and equipment while carrying out this work.

3: REFERENCES:

3.1 Guidance Drawings/Nameplate Data

Drawings: 761/02 (1 of 2 & 2 of 2)

3.2 Standards and Regulations

1. The following Coast Guard Standards and or Technical Bulletins must be adhered to in the course of executing this specification. Copies of these standards and bulletins can be obtained from the CCG Technical Authority.
   a) Canadian Coast Fleet Safety Manual (DFO 5737)
   b) Coast Guard ISM Lock Out/Tag Out Procedures

3.3 Owner Furnished Equipment

N/A

4: PROOF OF PERFORMANCE:

4.1 Inspection

1. Contractor shall notify CG TA upon starting and completing each ventilation system. This will allow for verification that each system has been completed and any deficiencies in the cleaning of duct work can be addressed.
2. Visual inspection of ducting by CG TA prior to final 'closing up'.

4.2 Testing

N/A

4.3 Certification

N/A

5: DELIVERABLES:

5.1 Reports, Drawings, and Manuals

1. Contractor shall provide a report of Duct Cleaning when the job is completed, summarizing the date and time each duct was cleaned, and the workers who were performing the task. The locations of any blockages encountered shall be identified in this report

5.2 Spares

N/A

5.3Training

N/A

E-05 – Bitter End Modifications

1: SCOPE:

The intent of this specification is to modify the anchor chain bitter ends to allow for a quick release of either anchor chain in case of emergency.

2: TECHNICAL DESCRIPTION:

2.1 General

1. Contractor shall complete this task in conjunction with Specification items: **E-01, E-02 & E-03**
2. Contractor shall modify current bitter end arrangement to allow for a quick release of port or stbd anchor chains in case of emergency. The new arrangement shall allow for either anchor chain to be released while the other stay secured.
3. Contractor shall design a watertight box with a hinged lid & gasket which shall house both bitter anchor chain ends. This box shall be mounted directly between current bitter ends in workshop to allow for both ends to be housed in same box.
4. Box shall be designed so that once lid is opened it allows for easy access to bitter end release mechanisms.
5. If emergency escape ladder is in way of new bitter end arrangement it shall be modified by Contractor to allow easy access to escape hatch for ship's crew.
6. If old bitter end boxes are not in way of new arrangement they shall be closed up with new gaskets and left in place.
7. Final design of new bitter end arrangement shall be approved by CG TA & TCMSB. Drawings of the design shall be approved by TCMSB.
8. All disturbed paintwork shall be feathered in & one coat of primer & one coat of paint (white) applied in workshop. Disturbed paintwork inside chain locker shall be feathered in and painted according to painting requirements detailed in specification item **E-03 Chain Lockers**, ensuring work is completed only once.

2.2 Location

1. The anchor chain bitter ends may be accessed from the engine room workshop and the chain locker.

2.3 Interferences

1. Contractor is responsible for the identification of any interference items, their temporary removal and storage and refitting to the vessel.
2. Contractor is responsible for protecting surrounding area and equipment while carrying out this work.

3: REFERENCES:

3.1 Guidance Drawings/Nameplate Data

1. Drawing: 511/03 Bitter End Details

3.2 Standards and Regulations

1. The following Coast Guard Standards and or Technical Bulletins must be adhered to in the course of executing this specification. Copies of these standards and bulletins can be obtained from the CCG Technical Authority.

    a. Canadian Coast Fleet Safety Manual (DFO 5737)
    b. Coast Guard ISM Lock Out/Tag Out Procedures
    c. Coast Guard ISM Confined Space Entry Procedures
    d. Coast Guard Hot Work Procedures

3.3 Owner Furnished Equipment

N/A

4: PROOF OF PERFORMANCE:

4.1 Inspection

1. Contractor shall be responsible for coordination with TCMSB & CG TA for inspection of final installation.

4.2 Testing

1. Functional test of bitter end modification to ensure it allows the securing arrangement to drop & release the anchor chains.
2. All welding done on bulkhead shall have NDT testing completed to ensure no leaks.
3. Gasket sealing faces shall be chalk tested to ensure a proper sealing surface is achieved.

4.3 Certification

1. Prior to work commencing, TCMSB shall approve overall design & drawings of new arrangement.
2. TCMSB shall inspect the installed configuration in order to lift the current deficiency.

5: DELIVERABLES:

5.1 Reports, Drawings, and Manuals

1. Contractor shall supply two copies of all welding test reports to CG TA and one copy to TCMSB.
2. Contractor shall supply CG TA with two paper copies of new bitter end arrangement & release box detail drawings, as well as two digital copies on two separate USB sticks.

5.2 Spares

N/A

5.3Training

N/A

E-06 – #1 Fire & General Service Pump Survey

1: SCOPE:

The intent of this Specification Item is to open, clean and inspect the #1 Fire and General Service pump for TCMSB credit. The electric motor associated with this pump is also to be overhauled.

2: TECHNICAL DESCRIPTION:

2.1 General

1. Contractor shall isolate the pump both electrically and mechanically prior to commencing any work. Any piping removed shall be suitably blanked with solid blank flanges fitted with appropriate gaskets. Upon completion of piping isolation, Contractor is required to immediately notify the Chief Engineer to verify.

2. Contractor is to ensure that the piping is isolated in such a way to ensure the vessels fire main can still be used in the event of an emergency.

3. Contractor shall remove the pumping unit. This pump is fitted with a split mechanical seal Contractor shall disconnect all sea water pipes to the mechanical seal and disassemble as per manufacture instructions. Contractor shall supply and install a new version of this seal during reassembly.

4. Contractor shall note orientation of stub shaft and coupling before disassembly, along with the placement of any balancing weights. These must be followed during reassembly.

5. Pump shall be stripped out, cleaned and inspected. Pump shaft and casing are to be examined for corrosion/erosion and wear. All wear components are to be measured to ensure they are within manufacture's requirements. Any defects are to be brought to the attention of the Chief Engineer.

6. Contractor shall contact TCMSB inspector to arrange for inspection of the pump when it is completely disassembled and laid out. Contractor must provide advanced notice of the scheduled inspection to CG TA.

7. Electric motor shall be removed from the vessel and taken to an accredited electric motor service/repair facility. Motor is to be megger tested and readings recorded before removal.

8. The motor is to be completely opened for inspection and cleaning. All internals are to be wiped clean using an approved cleaning solvent. The motor is to be steam cleaned, baked and new insulating material applied to the windings as required. If during or after the cleaning process it is determined that there is some winding work required, the Chief Engineer is to be notified prior to commencement of repairs.

9. Contractor shall reassemble pumping unit using new gaskets, O-rings, and mechanical seal.

10. Contractor shall supply and install new motor shaft bearings. Bearings shall be OEM equipment or equal. Bearings shall be carefully installed on the rotor shaft using proper techniques to preclude the possibility of damage to bearings and/or shaft.

11. Motor is to be re-assembled in good order with meggar testing of insulation performed and recorded once again. Motor is to be returned to the vessel and installed to the pump unit.

12. Precision alignment to each coupling shall be checked and adjusted as required using a dial indicator. Acceptable tolerance is within 0.002”.

13. Contractor shall remove all blanks and re-install any removed piping using new gaskets once the pumping unit is reassembled.

14. Pump will be tested as per the testing requirements and all work must be completed to the satisfaction of CG TA and TCMSB.

2.2 Location

1. The #1 Fire and General Service Pump is located in the starboard forward area of engine room.

2.3 Interferences

1. Contractor is responsible for the identification of any interference items, their temporary removal and storage and refitting to the vessel.
2. Contractor is responsible for protecting surrounding area and equipment while carrying out this work

3: REFERENCES:

3.1 Guidance Drawings/Nameplate Data

1. Machinery Manuals are available from the vessel upon request.

3.2 Standards and Regulations

1. The following Coast Guard Standards and or Technical Bulletins must be adhered to in the course of executing this specification. Copies of these standards and bulletins can be obtained from the CCG Technical Authority.
    a. Canadian Coast Fleet Safety Manual (DFO 5737)
    b. Coast Guard ISM Lock Out/Tag Out Procedures

3.3 Owner Furnished Equipment

1. Unless otherwise stated, all materials, labour, and equipment, and transportation required to complete all requirements of this specification shall be Contractor supplied.

4: PROOF OF PERFORMANCE:

4.1 Inspection

1. While the pump is disassembled, all components shall be laid out for inspection by CGTA and TCMSB.

4.2 Testing

1. The completed pump unit is to be test run for a period of one half hour, under load, to prove proper operation. During the load test, current readings and temperatures of the motor are to be recorded at 5 minute intervals. On successful completion of the test run, an additional set of megger readings shall be taken and recorded.

4.3 Certification

1. TCMSB certification under Division 3 Field # 3H026 is required for this specification to be considered complete.

5: DELIVERABLES:

5.1 Reports, Drawings, and Manuals

1. Contractor shall provide a written report detailing all measurements and readings recorded, as well as all work completed on the pumping unit.

5.2 Spares

N/A

5.3Training

N/A