Appendix A

Mechanical Drawings

and

Technical Specifications

TRUE NORTH

PROJECT NORTH

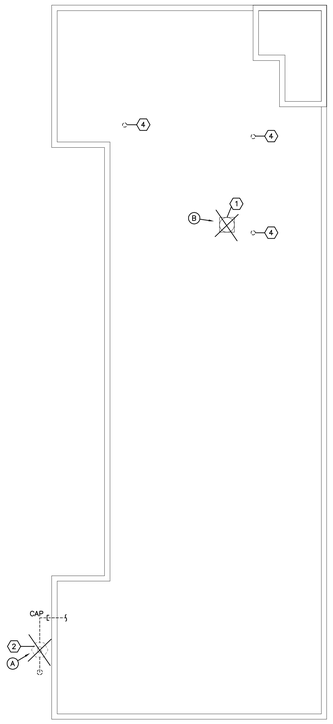

1 M1.0 MECHANICAL – DEMOLITION ROOF PLAN

SCALE 1:100

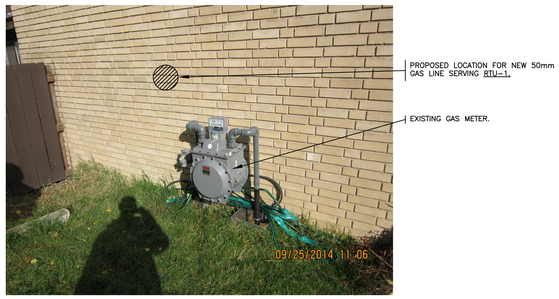

A M1.0 PICTURE A – EXISTING GAS METER LOCATION

SCALE N.T.S

B M1.0 PICTURE B – EXISTING EXHAUST FAN LOCATION

SCALE N.T.S

GENERAL NOTES

1. CONTRACTOR IS RESPONSIBLE FOR REVIEWING ALL DRAWINGS AND ON-SITE CONDITIONS TO DETERMINE THE EXACT EXTENT OF WORK.
2. WHERE CORING OR DRILLING REQUIRED ON ROOF, CONTRACTOR TO X-RAY PRIOR TO COMMENCING WORK. COORDINATE EXACT LOCATION OF ROOF BEAMS, TRUSSES, OR STRUCTURAL ELEMENTS BEFORE CORING.
3. CONTRACTOR TO PROVIDE FLASHING FOR ALL ROOF PENETRATIONS. ENSURE PENETRATIONS ARE PROPERLY SEALED.
4. CONTRACTOR TO COORDINATE FINAL LOCATION OF ALL HVAC EQUIPMENT ON ROOF.
5. ALL ROOF TOP UNITS c/w ROOF CURBS.
6. CONTRACTOR TO PROVIDE ALL NECESSARY PIPE SUPPORTS FOR ALL GAS PIPING INSTALLED ON ROOF.
7. CONTRACTOR TO PROVIDE GAS VENT AS PER CODE REQUIREMENT.
8. CONTRACTOR TO COORDINATE GAS SHUT-DOWN & GAS METER REPLACEMENT WITH OWNER AND ATCO GAS PRIOR TO ANY WORK.

PICTURE KEY NOTES:

(A) EXISTING GAS METER LOCATION ON GROUND LEVEL.

(B) EXISTING EXHAUST FAN LOCATION ON ROOF.

KEY NOTES:

(1) REMOVE EXISTING EXHAUST FAN AND CAP EXISTING ROOF CURB FOR FUTURE CONNECTION.

(2) EXISTING GAS METER (LOCATED ON GROUND LEVEL). CONTRACTOR TO ISOLATE GAS METER AND ALL CONNECTIONS PRIOR TO NEW GAS LINE INSTALLATION.

(3) (RESERVED)

(4) EXISTING PLUMBING VENT [TO REMAIN].

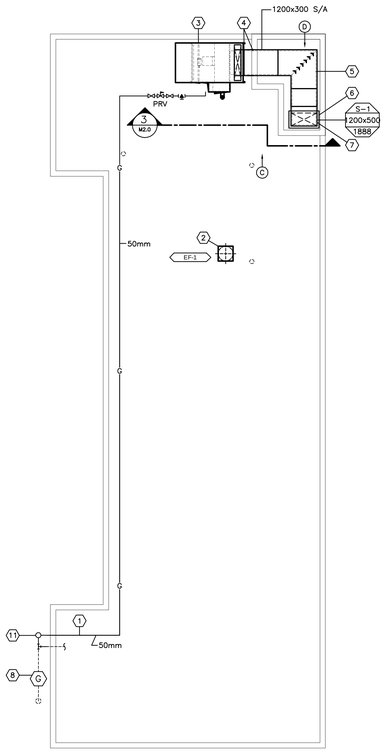

2 M1.0 MECHANICAL – RENOVATION ROOF PLAN

SCALE 1:100

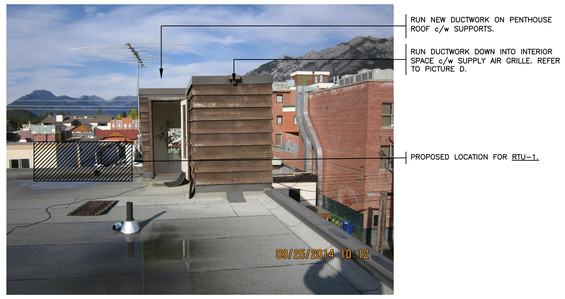

C M1.0 PICTURE C – PROPOSED LOCATION OF RTU-1 AND DUCT ROUTING.

SCALE N.T.S

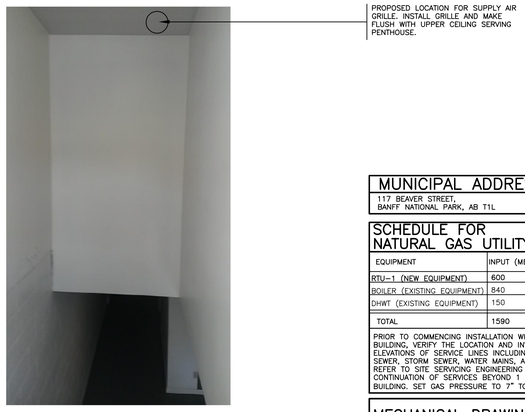

D M1.0 PICTURE D – PROPOSED LOCATION OF SUPPLY GRILLE.

SCALE N.T.S

GENERAL NOTES

1. CONTRACTOR IS RESPONSIBLE FOR REVIEWING ALL DRAWINGS AND ON-SITE CONDITIONS TO DETERMINE THE EXACT EXTENT OF WORK.
2. WHERE CORING OR DRILLING REQUIRED ON ROOF, CONTRACTOR TO X-RAY PRIOR TO COMMENCING WORK. COORDINATE EXACT LOCATION OF ROOF BEAMS, TRUSSES, OR STRUCTURAL ELEMENTS BEFORE CORING.
3. CONTRACTOR TO PROVIDE FLASHING FOR ALL ROOF PENETRATIONS. ENSURE PENETRATIONS ARE PROPERLY SEALED.
4. CONTRACTOR TO COORDINATE FINAL LOCATION OF ALL HVAC EQUIPMENT ON ROOF.
5. ALL ROOF TOP UNITS c/w ROOF CURBS.
6. CONTRACTOR TO PROVIDE ALL NECESSARY PIPE SUPPORTS FOR ALL GAS PIPING INSTALLED ON ROOF.
7. CONTRACTOR TO PROVIDE GAS VENT AS PER CODE REQUIREMENT.
8. CONTRACTOR TO PROVIDE SQUARE THROAT ELBOWS COMPLETE WITH TURNING VANES. TYPICAL FOR ALL ELBOWS.
9. REFER TO ELECTRICAL DRAWINGS FOR ALL ELECTRICAL PROVISIONS FOR NEW MECHANICAL EQUIPMENT.

PICTURE KEY NOTES:

(C) PROPOSED LOCATION OF RTU-1 AND DUCT ROUTING ON PENTHOUSE ROOF.

(D) PROPOSED LOCATION SUPPLY AIR GRILLE.

KEY NOTES:

(1) NEW 50mm GAS PIPE FROM GAS METER [@ 0.25 PSI]. CONTRACTOR TO COORDINATE PIPING RUNS AND SUPPORTS TO RTU-1 ON-SITE.

(2) INSTALL NEW EXHAUST FAN EF-1 ON EXISTING ROOF CURB. CONTRACTOR TO PROVIDE ALL NECESSARY SUPPORTS & WATER PROOFING AS REQUIRED FOR NEW FAN.

(3) NEW ROOF TOP UNIT RTU-1 c/w ROOF CURB AND BIRDSCREEN.

(4) RISE S/A DUCT UP FROM RTU-1. TRANSITION DUCT FROM 1650x300 TO 1200x300. PROVIDE 50mm INTERNAL INSULATION ON ALL ASSOCIATED S/A DUCTWORK. CONTRACTOR TO PROVIDE ALL NECESSARY SUPPORTS TO BUILDING AS REQUIRED.

(5) RUN S/A DUCT 300mm ABOVE PENTHOUSE ROOF w/ SUPPORTS (AS REQUIRED).

(6) INSTALL NEW ROOF CURB c/w FLASHING FOR 1200x300 S/A DUCTWORK.

(7) RUN S/A ELBOW DOWN (c/w TURNING VANES) THRU NEW PENTHOUSE ROOF CURB. EXTEND DUCT DOWN INTO CEILING SPACE. INSTALL 1200x600 SUPPLY AIR GRILLE ON OUTLET OF DUCT c/w BALANCING DAMPER. MAKE GRILLE FLUSH WITH EXISTING CEILING.

(8) EXISTING GAS METER (ON GROUND LEVEL). CAPACITY SUFFICIENT FOR EXISTING AND ADDED RTU LOAD.

(9) (RESERVED)

(10) RUN NEW GAS LINE FROM EXISTING GAS METER. CONTRACTOR TO COORDINATE TIE-INS TO METER ON-SITE. COORDINATE SHUTDOWNS AS REQUIRED TO MAKE THE PIPING CONNECTION.

(11) PROVIDE NEW 50mm TAKE-OFF FROM EXISTING METER AND RISE UP AGAINST BULDING TO ROOF LEVEL. CONTRACTOR TO COORDINATE PIPING RUNS AND INSTALLATION.

MUNICIPAL ADDRESS:

117 BEAVER STREET,
BANFF NATIONAL PARK, AB T1L

SCHEDULE FOR NATURAL GAS UTILITY

EQUIPMENT	INPUT (MBH)	NOTES:
RTU-1 (NEW EQUIPMENT)	600	MINIMUM DISTANCE BETWEEN GAS LINE AND UNDERGROUND SERVICES- 2000mm
BOILER (EXISTING EQUIPMENT)	840	
DHWT (EXISTING EQUIPMENT)	150	
TOTAL	1590	

PRIOR TO COMMENCING INSTALLATION WITHIN THE BUILDING, VERIFY THE LOCATION AND INVERT ELEVATIONS OF SERVICE LINES INCLUDING SANITARY SEWER, STORM SEWER, WATER MAINS, AND GAS MAINS. REFER TO SITE SERVICING ENGINEERING DRAWINGS FOR CONTINUATION OF SERVICES BEYOND 1 METER FROM BUILDING. SET GAS PRESSURE TO 7" TO 14" W.C

MECHANICAL DRAWINGS LIST

Sheet Number	Sheet Title
M1.0	MECHANICAL LEGEND, ROOF DEMOLITION AND RENOVATION PLAN.
M2.0	MECHANICAL – TYP. SUITE DEMOLITION & RENOVATION PLAN / SECTION PLAN
M3.0	MECHANICAL – DETAILS & SCHEDULES

LEGEND

ELBOW RISING
TOP TAKE-OFF
BOTTOM TAKE-OFF
ELBOW DROPPING
SHUT-OFF VALVE
PRESSURE REDUCING VALVE
CAP OR PLUG
SUPPLY DUCT (UP & DOWN)
RETURN DUCT (UP & DOWN)
EXHAUST DUCT (UP & DOWN)
ROUND DUCT (UP & DOWN)
FLEXIBLE DUCT CONNECTION
BALANCING DAMPERS
MOTORIZED DAMPER
SUPPLY OUTLET
DIFFUSER
RETURN OR EXHAUST INLET (WALL TYPE)
RETURN OR EXHAUST INLET (CEILING TYPE)
DOOR GRILLE (SIZE)-DOOR UNDERCUT — D/U
FIRE DAMPER OR SMOKE DAMPER
TURNING VANES
ACOUSTIC LINED DUCTWORK — AD
ACCESS DOOR
AIR OUTLET OR INLET — TYPE / SIZE (MM) / CAPACITY (l/s)
RADIATION — TYPE / FIN LENGTH (MM) / CAPACITY (KW)
PICTURE KEY NOTE AND CAMERA DIRECTION — C

notes

PROFESSIONAL ENGINEER STEPHEN GUSTAV CLAUSEN ALBERTA

Nov 13th, 2015

MCW Hemisphere Ltd.
Permit Number: P13022

no.	date	revision
B	13/11/15	ISSUED FOR TENDER
A	06/11/15	ISSUED FOR REVIEW

consultant

MCW Hemisphere Ltd.
CONSULTING ENGINEERS
* EDMONTON * CALGARY *
#202, 638 11 Avenue SW, Calgary, Alberta, T2R 0E5
TEL: (403) 245-5446 FAX: (403) 244-0191
NCMR-C10005

permit

north

seal

project

BEAVER STREET APPARTMENTS – BANFF MAKE-UP AIR ADDITION

CALGARY ALBERTA

title

MECHANICAL LEGEND, ROOF DEMOLITION AND RENOVATION PLAN.

date	drawn by BM	scale
checked by	approved by	project no.
revision A	drawing no. M1.0	

TRUE NORTH

PROJECT NORTH

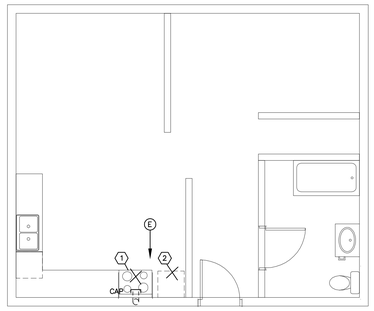

1 M2.0 MECHANICAL – TYPICAL SUITE DEMOLITION PLAN

SCALE 1:50

REMOVE EXISTING CABINTRY DOOR AND REPLACE WITH DRYWALL COVER. REFER TO SUITE RENOVATION PLAN MXX.

REMOVE EXISTING RANGEHOOD AND ALL ASSOCIATED EXHAUST DUCTWORK . CAP EXHAUST DUCT INSIDE WALL AND MAKE AIR TIGHT. REPAIR WALL AND TILING AS REQUIRED. REFER TO SUITE RENOVATION PLAN MXX.

E M2.0 PICTURE E – TYPICAL KITCHEN LAYOUT

SCALE N.T.S

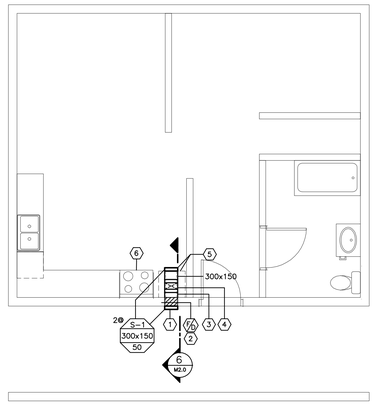

2 M2.0 MECHANICAL – TYPICAL SUITE FLOOR PLAN

SCALE 1:50

GENERAL NOTES

1. CONTRACTOR IS RESPONSIBLE FOR REVIEWING ALL DRAWINGS AND ON-SITE CONDITIONS TO DETERMINE THE EXACT EXTENT OF WORK.
2. CONTRACTOR TO PROVIDE ACCESS DOOR FOR FIRE DAMPER. COORDINATE INSTALLATION OF ACCESS DOOR ON-SITE.

PICTURE KEY NOTES:

(E) EXISTING STOVE RANGEHOOD AND CABINETRY.

KEY NOTES:

1. REMOVE EXISTING STOVE RANGEHOOD AND ASSOCIATED EXHAUST DUCTWORK. CAP EXHAUST DUCT INSIDE WALL ASSEMBLY AND MAKE AIR TIGHT. CONTRACTOR TO ENSURE EXHAUST DUCT IS PROPERLY SEALED BEFORE REPAIRING WALL.
2. CONTRACTOR TO REMOVE EXISTING CABINET DOORS AND REPLACE WITH DRYWALL.

GENERAL NOTES

1. CONTRACTOR IS RESPONSIBLE FOR REVIEWING ALL DRAWINGS AND ON-SITE CONDITIONS TO DETERMINE THE EXACT EXTENT OF WORK.
2. CONTRACTOR TO PROVIDE ACCESS DOOR FOR FIRE DAMPER. COORDINATE INSTALLATION OF ACCESS DOOR ON-SITE.

KEY NOTES:

1. PROVIDE 300x150 SUPPLY AIR GRILLE AT HIGH LEVEL INSIDE CORRIDOR.
2. INSTALL TYPE-A FIRE DAMPER INSIDE WALL ASSEMBLY. FIRE DAMPER TO BE FLANGED TO DUCT.
3. RUN DUCTWORK INSIDE EXISTING CABINETRY LOCATED ABOVE FRIDGE. PROVIDE 50mm INTERNAL ACOUSTIC INSULATION ON DUCTWORK.
4. DROP 300x150 DUCT DOWN INSIDE CABINETRY.
5. MOUNT GRILLE ON OUTSIDE DRYWALL.
6. PROVIDE NEW STOVE CHARCOAL RANGEHOOD. CONTRACTOR TO FIELD CONFIRM EXACT DIMENSIONS OF HOOD PRIOR TO INSTALLATION.

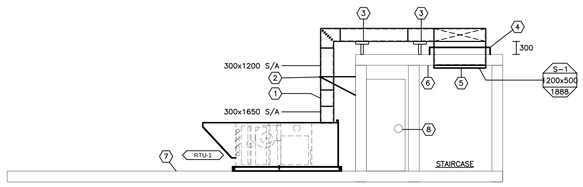

3 M2.0 MECHANICAL – RTU-1 SECTION

SCALE 1:50

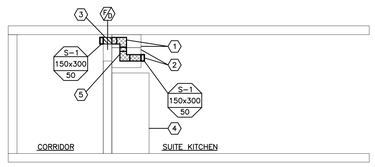

4 M2.0 MECHANICAL – TYPICAL SUITE SECTION

SCALE 1:50

GENERAL NOTES

1. CONTRACTOR IS RESPONSIBLE FOR REVIEWING ALL DRAWINGS AND ON-SITE CONDITIONS TO DETERMINE THE EXACT EXTENT OF WORK.
2. WHERE CORING OR DRILLING REQUIRED ON ROOF, CONTRACTOR TO X-RAY PRIOR TO COMMENCING WORK. COORDINATE EXACT LOCATION OF ROOF BEAMS, TRUSSES, OR STRUCTURAL ELEMENTS BEFORE CORING.
3. CONTRACTOR TO PROVIDE FLASHING FOR ALL ROOF PENETRATIONS. ENSURE PENETRATIONS ARE PROPERLY SEALED.
4. CONTRACTOR TO COORDINATE FINAL LOCATION OF ALL HVAC EQUIPMENT ON ROOF.
5. ALL ROOF TOP UNITS c/w ROOF CURBS.
6. PROVIDE PIPE SUPPORTS FOR ALL GAS PIPING INSTALLED ON ROOF.
7. CONTRACTOR TO PROVIDE GAS VENT AS PER CODE REQUIREMENT.
8. CONTRACTOR TO COORDINATE RTU-1 LOADING WITH STRUCTURAL ENGINEER PRIOR TO INSTALLATION.

KEY NOTES:

1. TRANSITION DUCT FROM 300x1650 TO 300x1200. PROVIDE 50mm INTERNAL INSULATION ON DUCTWORK.
2. ANGLE DUCT SUPPORTS. CONTRACTOR TO DETERMINE EXACT NUMBER OF SUPPORTS AS REQUIRED.
3. RUN S/A DUCT 300mm ABOVE PENTHOUSE ROOF w/ UNISTRUT STEEL CHANNEL SUPPORT (AS REQUIRED).
4. INSTALL NEW ROOF CURB c/w FLASHING FOR 1200x300 S/A DUCTWORK.
5. RUN S/A ELBOW DOWN (c/w TURNING VANES) THRU NEW PENTHOUSE ROOF CURB. EXTEND DUCT DOWN INTO CEILING SPACE. INSTALL 1200x600 SUPPLY AIR GRILLE ON OUTLET OF DUCT c/w BALANCING DAMPER. MAKE GRILLE FLUSH WITH EXISTING CEILING.
6. EXISTING CEILING.
7. EXISTING ROOF.
8. EXISTING PENTHOUSE AND ENTRY DOOR.

GENERAL NOTES

1. CONTRACTOR IS RESPONSIBLE FOR REVIEWING ALL DRAWINGS AND ON-SITE CONDITIONS TO DETERMINE THE EXACT EXTENT OF WORK.
2. CONTRACTOR TO PROVIDE ACCESS DOOR FOR FIRE DAMPER. COORDINATE INSTALLATION OF ACCESS DOOR ON-SITE.

KEY NOTES:

1. EXISTING BULKHEAD INSIDE KITCHEN. RUN DUCTWORK INSIDE BULKHEAD AND PROVIDE 90° ELBOW DOWN INTO EXISTING CABINETRY.
2. EXISTING CABINETRY. REMOVE CABINET DOORS AND REPLACE WITH SIDE MOUNTED DRYWALL. INSTALL GRILLE ON DRYWALL.
3. INSTALL TYPE-A FIRE DAMPER INSIDE WALL ASSEMBLY. FIRE DAMPER TO BE FLANGED TO DUCT.
4. EXISTING FRIDGE APPLIANCE.
5. PROVIDE ACOUSTIC INSULATION ON ALL DUCTWORK (TYPICAL).

notes

PROFESSIONAL ENGINEER STEPHEN SUMMERS ALBERTA

Nov 13th, 2015

MCW Hemisphere Ltd.
Permit Number: P13022

no.	date	revision
B	13/11/15	ISSUED FOR TENDER
A	06/11/15	ISSUED FOR REVIEW

consultant

MCW Hemisphere Ltd.
CONSULTING ENGINEERS
EDMONTON • CALGARY
#222, 638 11 Avenue SW, Calgary, Alberta, T2R 0E5
TEL (403) 245-5446 FAX (403) 244-0191
MCWHC10005

permit

north

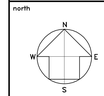

seal

project

BEAVER STREET APPARTMENTS – BANFF MAKE-UP AIR ADDITION

CALGARY ALBERTA

title

MECHANICAL – TYP. SUITE DEMOLITION & RENOVATION PLAN / SECTION PLAN

date	drawn by	scale
	BM	
checked by	approved by	project no.
revision	drawing no.	
A	M2.0	

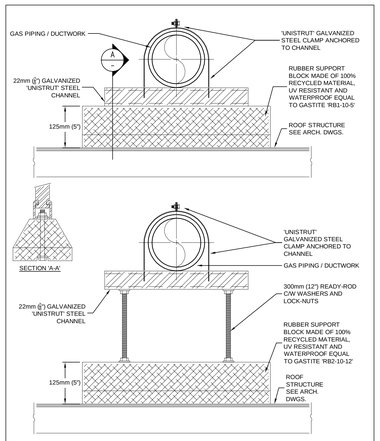

1 / M3.1 GAS PIPING / DUCT ROOF SUPPORT DETAIL
SCALE: N.T.S.

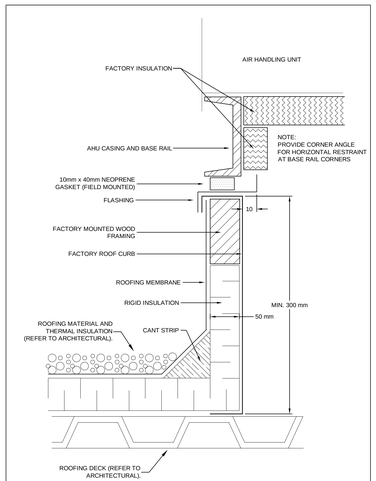

2 / M3.1 AHU ROOF CURB DETAIL
SCALE: N.T.S.

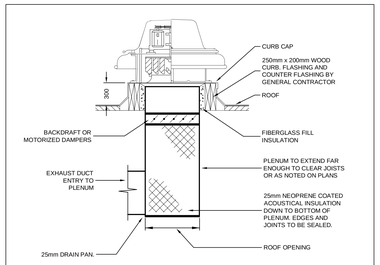

3 / M3.1 ROOF MOUNTED EXHAUST FAN DETAIL
SCALE: N.T.S.

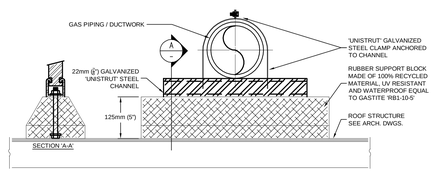

4 / M3.1 PIPE/DUCT SUPPORT ON ROOF
SCALE: N.T.S.

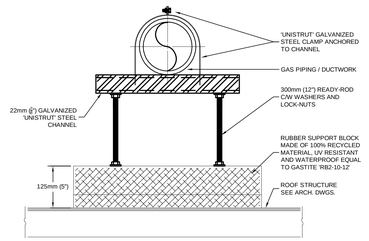

5 / M3.1 PIPE/DUCT SUPPORT ON ROOF
SCALE: N.T.S.

MAKE-UP AIR UNIT SCHEDULE

TAG	LOCATION	MANUFACTURER	MODEL	SERVICE	AIRFLOW (L/s)	INPUT HEATING CAPACITY (kW)	TEMP. RISE (°C)	E.S.P. (Pa)	MOTOR (HP)	ELECTRICAL (V/PH/HZ)	REMARKS
RTU-1	ROOF	ENGINEERED AIR	DJS60/C	BUILDING MAKE-UP AIR	1896	175.842	49	187	3	230/1/60	NOTE 1, 2, 3, 4, 5, 6, 7

NOTES: 1) 2" MERV 8 FILTER. 2) NATURAL GAS INDIRECT FIRE. 3) VFD MOTOR. 4) ROOF CURB 5) UNIT WEIGHT IS 2350 LBS APPROX. 6) 600 MBH INPUT. 480 MBH OUTPUT @120F RISE.
7) PROVIDE INTERNAL ISOLATION FOR MOTOR AND FAN.

AIR TERMINALS SCHEDULE

TAG	MANUFACTURER	MODEL	DESCRIPTION	FINISH	MOUNTING	ACCESSORIES	REMARKS
S-1	PRICE	620DAL/F/L/A/B12	S/A GRILLE	B12	CELING MOUNTED	--	INSTALL GRILLE WITHIN EXISTING PENTHOUSE CEILING c/w ALL SUPPORTS.

FAN SCHEDULE

TAG	LOCATION	MANU.	MODEL	SERVICE	CAPACITY L/s	T.S.P. in. Wg	MOTOR HP	ELECTRICAL Volts h/60Hz	REMARKS
EF-1	ROOF	GREENHECK	GB-161HP-7	BUILDING BATHROOM EXHAUST	708	1.5	0.75	208V/1PH/60HZ	ROOF MOUNTED EXHAUST FAN c/w ROOF CURB GPI-22-G12, CURB EXTENTION-GALV GPE-22-G12, CURB SEAL, BACKDRAFT DAMPER, ALUMINUM BIRSCREEN. INTERLOCK WITH ROOF TOP UNIT RTU-1.
NOTES:									

TRUE NORTH
PROJECT NORTH

notes

PROFESSIONAL ENGINEER STEPHEN GUSDAL ALBERTA
May 13th, 2015
MCW Hamisphere Ltd.
Permit Number: P13022

no.	date	revision
B	13/11/15	ISSUED FOR TENDER
A	06/11/15	ISSUED FOR REVIEW

consultant

MCW Hemisphere Ltd.
CONSULTING ENGINEERS
* EDMONTON * CALGARY *
#202, 838 11 Avenue SW, Calgary, Alberta, T2R 0E5
TEL (403) 245-5446 FAX (403) 244-0191
MCWHC13009

permit

north

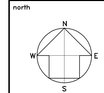

seal

project
BEAVER STREET APPARTMENTS – BANFF MAKE-UP AIR ADDITION
CALGARY ALBERTA

title
MECHANICAL – DETAILS & SCHEDULES

date	drawn by	scale
2015-04-30	BM	AS NOTED
checked by	approved by	project no. C15005
revision A	drawing no. M3.0	

1. General

1.1 DIVISION 21 SCOPE OF WORK

.1 **All drawings** and **all sections** of the specifications including all addenda, apply to and form an integral part of this section.

.2 Coordination of all work by other trades.

.3 Work to include all labour, material and equipment required for installing, testing and placing in initial operation the mechanical systems and equipment as detailed in each section of specifications and as shown on drawings, whether given in Division 21 or elsewhere, or shown on Mechanical Drawings or elsewhere.

.4 All Mechanical Work to be bid as a single complete sub-contract even though work of various mechanical trades has been sub-divided into separate sections.

1.2 RELATED WORK

.1 Bidding Requirements and General Conditions of Contract — Division 0 and Division 1

1.3 LIMITATIONS OF DIVISION 21 DRAWINGS AND SPECIFICATIONS

.1 Division 21 drawings are diagrammatic and approximately to scale. They are intended to define quality, scope and to provide general guidelines. They are **not** intended to provide detailed installation instructions. They establish scope, material and quality and are not detailed instructions that define every offset, fitting, valve, or every difficulty encountered during execution of work.

.2 Field verify all building and site dimensions prior to any fabrication and installation of equipment or materials. No contract revisions will be considered for failure to verify these dimensions on site.

.3 Refer to architectural drawings for exact building and site dimensions.

.4 Review Division 21 drawings and specifications prior to any fabrication or installation and notify Consultant of any areas requiring further clarification. Do not attempt any fabrication or installation until such clarification is provided.

1.4 INTENT

.1 Provide complete and fully tested operational mechanical systems to meet the requirements described herein and in accordance with applicable Codes and Ordinances.

.2 Conform to manufacturer's instructions, details and procedures for equipment installations.

.3 Install piping and ductwork generally in locations and routes shown on the drawings, close to building structure. Minimized furring requirements and interference with other services or free space. Remove and replace improperly installed equipment. Install all piping and ductwork in concealed spaces unless noted otherwise.

.4 Follow the recommended installation details and procedures for equipment as found in suppliers technical data, supplemented by details given herein and on plans, which in turn shall be subject to the approval of Consultant.

.5 Provide additional material for modifications that may be required to correct minor job conflicts.

.6 Provide adequate clear space for future or Owner supplied equipment and connections for such equipment, and for future extensions to the building. If required by Consultant, provide detailed layouts for checking and approval before commencing work.

.7 Plumbing fixtures shown on Architectural drawings and not on Mechanical drawings shall be supplied and installed by the Contractor with all necessary piping for the complete operation of the fixture. Check all architectural drawings during the tendering period.

.8 Spaces reserved for equipment noted as future or future extension to buildings, to be left clear, as noted on drawings, so that future connections can be made.

.9 Refer to Architectural drawings for construction details. These shall be used to relate to roof supports, piping and duct penetrations in walls, roof and other building construction.

.10 Reference standards and building codes referred to in this specification shall be understood to be the latest edition, or the edition currently in force, for that document.

.11 Review Division 21 drawings and specifications while preparing tender estimate and notify the Consultant of any areas requiring clarification. Failure to acquire clarification from the Consultant does not relieve the Contractor from compliance with the intent of the design or the contract documents.

1.5 QUALITY ASSURANCE

.1 Replace materials less than specified quality or as designated by Consultant and relocate work incorrectly installed as determined by Consultant.

.2 Statically and dynamically balance rotating equipment for minimum vibration and low operating noise level.

.3 Install material and equipment using qualified trades people.

1.6 LAYOUT AND COORDINATION OF WORK

.1 Assume responsibility for laying out work and for damage caused by improper execution of work.

.2 Examine Structural, Architectural, Mechanical and Electrical and all other Contract drawings to ensure work can be performed without changes to the building as shown on plans. No allowance will be made later for necessary changes, unless notification of interferences have been brought to the Consultant's attention, in writing, prior to closing of tenders.

1.7 MAINTENANCE ACCOMMODATION

.1 Install all equipment such as valves, motors, traps, dampers, etc., in a manner to facilitate proper maintenance and ease of repair or replacement.

.2 Locate flanges and unions in such a manner that any piece of equipment can be removed and replaced without major pipe cutting and removal.

.3 Build any ductwork which may interfere with the maintenance or repair of equipment so that it can be readily removed or hinged out of the way.

.4 Provide oil level gauges, grease cups, lubrication fittings, etc. Provide extensions to outside of fan cabinets.

.5 Provide maintenance platforms, safety rails, ladders, etc., to facilitate maintenance of equipment which is not readily and safely accessible from a ladder or from the floor.

.6 Provide Lifting Eyes and Hooks:

.1 Ensure that all motors and components weighing over 68 kg are equipped with a lifting eye or lug.

.2 Where equipment is not in banks, provide two eye hooks above each piece of equipment.

1.8 EQUIPMENT SUPPORTS

.1 Design, construct and install metal supports, stands, platforms and other metal structures required for and associated with the mechanical equipment. Ensure that structures are designed so that loads and impact loads are properly distributed onto building structure.

.2 Where equipment is indicated or specified to be floor mounted on stands or legs, fabricate these from structural steel section and/or steel pipe with adequate bracing and steel plate flanges for bolting to the concrete housekeeping pad.

.3 Where ceiling or wall mounting is indicated or specified, use a suspended platform, bracket or shelf, whichever is most suitable for the equipment and its location. Fabricate from standard structural steel sections and plate and/or steel pipe. Ensure that these structures are adequately fastened to the building structure.

.4 Supports must be large enough to support the equipment along the entire length and width. Adequate provision must be made to install isolators if necessary either below the support or between support and the equipment.

.5 Refer to Section 23 05 29, Piping and Equipment Supports, for insert requirements, applicable to all piping, ductwork and equipment supports.

1.9 CONCRETE REQUIRED FOR MECHANICAL INSTALLATION

.1 Provide documentation to define concrete work required for the mechanical installation, including sump pits, tank ballast, buried ductwork, thrust blocks, housekeeping bases and inertia bases. Submit schedule within thirty (30) days of award of Contract.

1.10 ANCHOR BOLTS

.1 Provide and set anchor bolts, sleeves, washers, nuts and provide templates to locate the positions of the bolts. Set sleeves so that they are flush with or slightly above the top surface or rough concrete. Use anchor bolts with adequate right-angles bends or hooks, or with square plate washers, threads and nuts for anchoring. Do not use expansion shields or similar devices for anchoring mechanical equipment to concrete bases.

1.11 GROUTING AND LEVELLING

.1 Grout all machines having bed plates and flexible or solid couplings under the full area of the bedplate with a non-shrinking premixed grout. After grout has set, remove all wedges, shims and jack bolts, and fill the spaces with grout.

.2 Carefully level equipment on rough bases using metal levelling wedges and properly sized pieces of steel plate or steel sections. Allow maximum of 25 mm for grouting.

1.12 SITE SERVICES INFORMATION

.1 Base measurements, both horizontal and vertical, on established bench marks and coordinate with the General Contractor. Work shall agree with these established lines and levels and must be verified at the site both with respect to the project and the building site.

.2 Should an error be found between actual dimensions and those indicated which prevent proceeding or following the intent of the Contract Documents, the Contractor shall not proceed until he has received clarification from the Consultant.

.3 Location, routing and depth of sanitary sewers, storm sewers, water mains and other utilities shown on drawings are based on recorded information. Contractor and his site services subtrades shall carry out following verification procedure prior to installing the site services:

.1 Reconfirm information noted on contract drawings, by comparing with local utilities most current records.

.2 Take invert readings at nearest manholes and check for discrepancies with contract drawings.

.3 Dig test hole and expose service mains at point or points of connection and, in addition, confirm that service main size is same or larger than shown on contract drawings.

.4 Take grade level readings along route of service to be installed and confirm that services will be located below frost level under finished grade.

.4 Avoid damaging or displacing existing services where exact position is not known. Should any damage occur, advise the Consultant in writing for remedial instructions.

.5 Maintain liaison with the Owner to interrupt, reroute or connect to sewer, water and gas services. Restrict disruption of existing services to a minimum deviation.

.6 Arrange and coordinate all connections to street mains and metering requirements with the authorities.

.7 Atco will <u>not</u> provide quotes for natural gas service connections during the tender period.

.8 Utility company charges for connecting water, sanitary and storm sewer, and natural gas services will be carried as a cash allowance by the General Contractor.

1.13 MATERIALS AND EQUIPMENT

.1 Mechanical equipment and materials shall be in accordance with the following requirements.

.1 Equipment and materials shall be new and have design characteristics as specified.

.2 Equipment and materials shall conform to space limitations and shall not require redesign of any parts of the structural, mechanical, electrical, or architectural layout.

.3 Materials selected for a particular type, class, or service shall be of one manufacture. No indiscriminate mixing of manufacturers will be allowed.

1.14 WORKMANSHIP

.1 Employ tradesmen fully qualified under Federal, Provincial and Municipal regulations pertaining to the licensing and qualifications of tradesmen.

.2 Only first class workmanship will be accepted, not only as regards to safety, efficiency, durability, etc., but also as regards to the neatness of detail. Pipe work and ductwork must be lined up parallel to, or at right angles to building walls. Equipment must be accurately set, plumbed and welded, and hanger rods must be similar in true vertical adjustment. The entire work shall present a neat and clean appearance on completion.

.3 Building code requirements and/or manufacturer's written recommendations will be considered the minimum requirements of this specification. Where standards in excess of these are required they are noted in this specification.

1.15 EXAMINATION OF SITE

.1 The Contractor must examine the building site, existing adjacent buildings, and the services to be provided and shall satisfy himself that the work under this contract may be satisfactorily carried out without changes to the Contract Documents.

.2 No expense incurred by the contractor through his failure to make these examinations will be allowed for. Any errors found as a result of the examinations must be brought to the attention of the Consultant, in writing, before closing the tenders.

1.16 EQUIPMENT PROTECTION AND CLEAN-UP

.1 Protect equipment and materials in storage on site, during and after installation until final acceptance. Leave factory covers in place and take special precautions to prevent entry of foreign material into working parts of piping and duct systems.

.2 Protect equipment with polyethylene covers and crates.

.3 Operate, drain and flush out bearings and refill with new charge of lubricate, before final acceptance.

.4 Thoroughly clean piping, ducts and equipment of dirt, cuttings and other foreign substances. Disconnect, clean and reconnect whenever necessary for purpose of locating and removing obstructions. Repair work damaged in course of removing obstructions.

.5 Protect bearings and shafts during installation. Grease shafts and sheaves to prevent corrosion. Supply and install necessary extended nipples for lubrication purposes.

.6 Remove all tools, surplus and waste materials from the building site upon completion. Clean all grease, dirt and excess material from walls, floors, ceilings and fixtures for which this Contractor was responsible, and leave the premises suitable for immediate use.

.7 Ensure that existing equipment is moved without damage or loss; dismantle carefully, package and store loose components as necessary. Do not use existing materials or equipment unless specifically indicated.

1.17 PERMITS, CERTIFICATES, CODES AND FEES

.1 Give necessary notices, obtain necessary permits and pay required fees and taxes in order that the work under this contract may be carried out.

.2 Be responsible to file the necessary plans, to prepare for and obtain approval of documents as required by authorities having jurisdiction and to obtain certificates of inspection required. Deliver prior to request for acceptance and final payment for the work.

.3 Work and materials shall be in complete accordance with the approval of local codes and authorities having jurisdiction.

1.18 RECORD DRAWINGS

.1 Refer to Division 1, Project Close-out.

.2 Obtain an extra set of prints and use solely for the purpose to mark on all changes and deviations in runs of piping or ductwork or in the location of equipment as the job progresses. This set shall be kept up to date and shall constitute a complete record set of the installed equipment and materials at the completion of the project.

.3 Record drawings shall identify location of fire dampers, major control lines, access doors and tagged valves.

.4 At substantial performance of the Contract, turn the record drawings over to the Consultant. Clearly mark the drawings, "Record Drawing", stamp with the name of the Contractor and Mechanical sub-Contractor, with name and signature of the responsible representative of the Mechanical sub-Contractor.

.5 Furnish record drawings of sprinkler systems and control diagrams; piping and duct layout drawings may be requested by the Consultant.

.6 Indicate references to addenda and Change Order revisions.

1.19 SHOP DRAWINGS

.1 Refer to Division 1, Submittals.

.2 Submit for review by the Consultant, one (1) original and three (3) copies of shop drawings and product data.

.3 Until submission is reviewed, work involving relevant products may not proceed.

.4 Shop drawings which do not comply with the following procedure will not be reviewed.

.1 Include dimensional data for roughing-in and installation, technical data sufficient to check that equipment meets requirements of the Contract Documents, wiring, piping and service connection data, motor sizes complete with voltage ratings, and schedules as applicable.

.2 Clearly mark submittal material by flags, arrows, underlining or circling to shown data applicable to the project. Cross out non-applicable material. Specifically note on the submittal specified features such as special tank linings, pump seals, materials or finish.

.3 Shop drawings submitted for review shall be certified by the manufacturer and carefully checked by the trade involved, noting all revisions required. Where electrical connections are required, the electrical trade shall also be required, in conjunction with the mechanical trade, to check that his work will fit to the equipment being submitted for review. Drawings submitted for review shall bear the approval stamps and signatures of the Trades involved in the properly coordinated installation of the equipment.

.4 The Contractor shall accept responsibility for any equipment ordered where proper procedure has not been followed and no charges for cancellation, handling, restocking, etc. will be accepted.

.5 A complete file of approved shop drawings shall be kept on the site at all times and no shop drawings shall be used which do not bear the signed review stamp of the Consultant.

.6 The submission of the drawings shall infer that it meets all specifications and drawing requirements. Any discrepancies shall be noted on the submission for review by the Consultant. Failure to note these discrepancies and variations by the Consultant will not in any way relieve the Contractor from responsibility to correct the installation to the intent of the specifications and drawings. Drawings will not be accepted for review by the Consultant if not previously checked and stamped by the Contractor.

.7 The shop drawing review by the Consultant will provide the following certification:

"This shop drawing has been reviewed for general design, arrangement and appears to conform to the contract documents. Observed discrepancies are noted. All dimensions and suitability for site conditions are the responsibility of the contractor. All electrical characteristics must be coordinated with the electrical contractor. This review of this shop drawing shall not, in any way, relieve the contractor from complying with all requirements of the contract documents."

.8 Shop drawings required for mechanical equipment are listed in the individual sections of the specifications.

.9 Submit as a shop drawing a pipe material, joining and valve schedule broken down by size and service. Valve identification shall be by type, make and manufacturer's model number.

1.20 ABBREVIATIONS

.1 Abbreviations used in this specification are common to and in general use within the related trades.

1.21 TEMPORARY OR TRIAL USAGE

.1 Owner reserves right to use any piece of mechanical equipment, device or material installed under this Contract, for such reasonable lengths of time and at such times as the Consultant may require, to make complete and thorough test of same, before final completion and acceptance of any work. Such tests not to be construed as evidence of acceptance of any part of the contract. It is agreed and understood, that no claim for damage will be made for any injury or breakage to any part or parts of the above due to aforementioned tests, whether caused by weakness or inaccuracy of parts, or by defective materials or workmanship of any kind whatsoever. Supply all labour and equipment for such tests.

.2 All air filters shall have bi-monthly inspection. Filters shall be cleaned and/or replaced depending on filter type during period in which ventilation units are being used for temporary heat and/or commissioning of system. Contractor to be responsible and pay all costs for air filter cleaning service. Filters to operate between pressure drops noted in filter manufacturer's catalogue.

.3 Take responsibility for damage caused by defective material or workmanship during temporary or trial usage by the Owner.

1.22 TEMPORARY HEAT

.1 Refer to Division 1.

.2 Do not use the permanent systems for temporary heating purposes, without written permission from the Consultant.

.3 Use of permanent systems for temporary heat shall not modify the terms of guarantee/warranty.

.4 Provide adequate supervision to ensure heating systems are operating under conditions which cause no temporary or permanent damage. Operate closed systems with proper treatment. Operate fans at proper resistance with filters installed. Change filters at regular intervals. Operate with proper safety devices and controls installed and fully operational.

.5 Provide filter media on return and exhaust air outlet on air systems used during temporary heating. Clean duct systems which have become dirty.

.6 Provide alarm indicating system failure on permanent systems used for temporary heat.

.7 Replace mechanical seals in pumps used for temporary heating purposes with new mechanical seals, regardless of the seals condition.

1.23 SUBMISSIONS FOR OPERATING AND MAINTENANCE MANUALS

.1 Submit material for operating and maintenance brochures on all mechanical equipment, new and existing, for inclusion in operating and maintenance manuals described in Section 23 01 00. Include complete operating and maintenance instructions, shop drawings as previously submitted and reviewed by the Consultant and complete catalogue information.

.2 Submit material to meet the requirements of the Consultant.

1.24 SEMI-FINAL AND FINAL INSPECTIONS

.1 Refer to Division 1, Contract Close-out.

.2 A semi-final inspection will be carried out prior to final inspection. Advise the Consultant in writing, approximately ten (10) working days prior to the anticipated final inspection date so that this semi-final inspection may be carried out.

.3 Perform the following items prior to semi-final inspection. Provide declaration in writing that the items listed are completed:

.1 Heating and air conditioning systems capable of operation with alarm controls functional and automatic controls generally in operation, but not necessarily finally calibrated.

.2 Necessary tests on equipment made including tests required by authorities and certificates of approval obtained.

.3 Valve tagging completed and equipment identified. Equipment and piping painted and escutcheons installed.

.4 Equipment lubricated as per manufacturer's data.

.5 Warranty forms have been mailed to manufacturer. Submit a copy of the original warranty for equipment which has warranty period longer than one year.

.6 Submit sample of Operating/Maintenance Manuals. Arrange operating and maintenance instructions, and submit schedule for approval.

.7 Review and ensure that access doors are suitably located and equipment easily accessible included plumbing cleanouts.

.8 Noise and vibration control devices and flexible connections inspected by the manufacturer's representative and written report submitted.

.9 Equipment alignment carried out by qualified millwright and certified report submitted.

.10 Check operation of plumbing systems and fixtures and ensure that fixtures are solidly supported.

.11 Fan plenums cleaned and temporary filters removed and permanent filters installed.

.4 Prior to semi-final inspection, provide complete list of items which are either not finished or deficient at the time of the semi-final inspection.

.5 Provide declaration in writing that semi-final deficiencies and the following items have been completed prior to the final inspection:

.1 Equipment cleaned inside, outside and lubricated. Plumbing fixtures and brass cleaned.

.2 Final calibration of controls completed.

.6 Excessive deficiencies will not be tolerated. Should an excessive number of "final" inspections be required due to the Contractor, delay in completing the work, charges for Consultant’s time required to review the deficiencies may be levied against the Contractor.

1.25 CUTTING AND PATCHING

.1 Locate and provide holes and sleeves required for mechanical work. Relocate improperly located holes and sleeves at no additional cost to the contract.

.2 Patch building where damaged from equipment installation improperly located holes. Use matching materials specified in the respective section to result in construction, concealed and visible, equivalent to the original intent and exact in external appearance.

1.26 WATERPROOFING

.1 Where any waterproofing membrane or waterproof concrete must be pierced by the work, reseal the opening using a method approved by the Consultant prior to doing the work. Furnish and install sleeves, caulking and flashing subsequently required.

1.27 EXCAVATION AND BACKFILL

.1 Do necessary excavation inside building. Provide bedding and backfill with sand or other approved material to a minimum of 300 mm over pipe or as necessary to protect mechanical work. Remainder of excavation, backfilling and disposal of surplus material shall be in accordance with other Sections.

.2 Do not install any underground or buried pipe until such time as footings, foundations and piles are installed within a 15 m horizontal distance from such pipe.

.3 Work included shall in no way undermine the building foundation.

1.28 APPROVED EQUIPMENT MANUFACTURERS - PRODUCT OPTIONS

.1 Equipment specified by name, model and size for type of material to be used serves to set a standard of quality and shall be used as a standard for the Contractor's proposal. Bids shall be based on the equipment and material specified. Where a manufacturer wishes to tender his equipment he must make application in writing together with complete detailed technical submission to have his equipment approved. Information of a general nature will not be accepted. Requests for approval shall be made to the Consultant during the tendering period and ten (10) days prior to closing of the subcontractor's tenders.

.2 For products specified only by reference to standards, select any product which meets the standard, made by any manufacturer.

.3 For products specified by naming one or several products or acceptable manufacturers select any product names. If a standard is also referenced, verify that the product selected meets the standard.

.4 For products specified by naming one product there is no option unless the Consultant has accepted an alternative proposal submitted prior to signing of the Contract.

.5 Where the specification provides for selection of an option which is not entirely consistent with the drawings and schedules (as in the case of a piece of equipment which differs from the equipment detailed in dimensions, service requirements, loads imposed on structures, etc.) the Contractor, should he elect to use that option, agrees to coordinate the installation of the selected option into the Work, making such changes in the Work as may be required to accommodate the option, and he will bear and waives all claims for additional compensation for costs which subsequently become apparent arising out of the option, including costs of re-design, and preparation of drawings and details.

.6 Manufacturers whose products are acceptable for tendering and installation, subject to paragraph .5 above, are named in the appropriate Section of the Division 21 of these Specifications.

1.29 BULK PRICING

.1 If, during tendering, a bulk price without breakdown is received from a supplier which, in the opinion of the Contractor, reduces competitive pricing of material, the Contractor shall notify the Consultant. Supplier may be removed from the list of approved equivalents.

1.30 COST BREAKDOWN AND PROGRESS CLAIMS

.1 Submit prior to or with the first progress claim, a breakdown of the contract amount in a form of acceptable to the Consultant.

.2 Show separately for each item requested: Labour, Material, Equipment.

.3 For first and subsequent progress claims, arrange figures in columns:

Contract Item	Breakdown	Previous Claim	Present Claim	Claim to Date	Percentage Complete

.4 List the following **"Items":**

.1 Job Start-up and Administration.

.2 Site Services

.3 Plumbing

.4 Heating

.5 Cooling

.6 Fire Protection

.7 Sheet Metal

.8 Insulation

.9 Controls

.10 Start-up and Commissioning

.11 Documentation and Balancing

1.31 INSPECTIONS

.1 Contractor's work will be inspected periodically by the Consultant solely for purpose of determining general quality of work, and not for any other purpose. Guidance will be offered to Contractor in interpretation of plans and specifications to assist them to carry out work. Inspection and directives given to Contractor does not relieve Contractor and his agents, servants and employees of their responsibility to erect and install work in all its parts in a safe and workmanlike manner, and in accordance with plans and specifications, nor impose upon the Consultant any responsibility to supervise or oversee erection or installation of any work.

1.32 COOPERATION WITH OTHER TRADES

.1 Give full cooperation to all other trades, submit any written information where necessary to permit the work of other trades to proceed without delay or interference. A copy of this information shall also be submitted to the Consultant.

.2 Where Mechanical Contractor's work will be installed in close proximity to the work of other trades, or where there appears to be an interference between trades, all trades involved shall assist in working out a suitable space arrangement. Failure to make notification of conflicts prior to installation may require the Mechanical Contractor to make necessary changes at his own expense.

1.33 MECHANICAL AND ELECTRICAL TRADE COORDINATION

.1 Mechanical Subcontract Responsibilities

.1 Include the supply and installation of all electrical motors, control devices, temperature control systems and other devices and systems specified under this Division that is required for proper and safe operation.

.2 Provide all wiring for package equipment and where required provide controlling devices such liquid level controllers, multi-speed motor controllers, etc.

.3 Include all low and line voltage wiring associated with the control systems. This includes all wiring necessary for the interconnection of components to enable the automatic operation of equipment as intended and specified in Division 21 work. Include all wiring as associated with the installation of control panels.

.4 Provide CSA labelling on all mechanical equipment that will require electrical connections.

.5 Submit a list of motor requirements and electrical connections that will be required for the mechanical system. Include voltage, phase and motor horsepower requirements as applicable.

.2 Electrical Subcontract Responsibilities

.1 Supply and installation of all disconnect switches, starters, relays, heater coils, interlocks, etc., which are not an integral part of package units or equipment but which are required for the performance and intended operation of all equipment.

.2 All electrical connections and wiring for equipment provided under Division 21 with the exception of that required for Controls and Instrumentation as noted elsewhere in this Division. This shall include all power connections to starters supplied with equipment. In general, include all power wiring between the power source, the starter and the motor to enable the motor to be operated manually. This will include the interconnections of series controls such as line voltage thermostats, pump controllers, etc.

.3 Package Equipment

.1 Equipment such as heating and cooling units, etc., which are intended to be supplied as pre-assembled single responsibility packages shall have all low and line voltage prewired.

.2 Provide all interconnecting wiring required for on-site assembly of various parts and for remote controlling devices.

.3 Include starters as part of the package where specified.

1.34 EXISTING SYSTEMS

.1 Where work requires temporary interruption of mechanical services, notify the General Contractor and Owner in advance the length of shutdown and extent of work involved, before service may resume normal operation. This work shall be done during the time actually required to make necessary connections to existing work. Shutdown and draining of existing lines to accommodate new connections shall be done by the Contractor.

.2 Carefully dismantle existing mechanical equipment to be removed or relocated, together with reusable materials. Existing equipment, piping, ductwork, conduit, light fixtures which interfere with the new installation shall be temporarily disconnected; that which the Owner does not wish to retain or is not being reused shall become the Contractor's property and removed from the site. Where noted this existing equipment shall be reused in new work after first repairing and reconditioning any defective items. Permanently disconnected mechanical and electrical connections shall be safely capped and sealed flush within finished surfaces. Remove existing inactive services.

1.35 PROJECT SCHEDULE

.1 Schedule work strictly in accordance with project schedule outlined in Division 1 and all associated costs included.

1.36 MECHANICAL INFORMATION ON TENDER DOCUMENTS

.1 Refer to Division 1.

.2 Complete all mechanical information required for completion of tender form, and submit with tender.

.3 Provide separate prices for items listed on the mechanical information sheet and tender form.

.4 It is **extremely** important that these prices be as accurate as possible since they are used by the Owner in their financial assessments.

END OF SECTION

1. General

1.1 SCOPE

.1 Include the following work:
- .1 Operating and Maintenance Manuals
- .2 Record Drawings
- .3 Turnover Seminar

2. Products

3. Execution

3.1 OPERATING AND MAINTENANCE MANUALS

.1 Refer to Division 1, Contract Close-Out.

.2 Secure and assemble all necessary literature describing the operation and maintenance of all equipment provided. Complete and transmit documentation for review to Consultant two (2) weeks prior to final inspection.

.3 Provide documentation agent with one set of plans, specifications, addenda and change orders for their use only.

.4 Provide 2l6 mm x 280 mm capacity, 3 post expandable binders, hot stamped lettering front and spine. Provide two copies to Owner, one copy to Consultant. Maximum thickness of binders not to exceed 100 mm.

.5 Index binder according to the following system:

Tab - 1.0 System Information

Tab - 1.1 List of Mechanical Drawings

Tab - 1.2 Description of Systems:
Provide complete description of the operating sequence for each system. Include detailed system description, with individual components described, explanation of how components interface with others and to the complete system. Index according to system:

1.0 Heating and Cooling System

Tab - 1.3 Operating Division:
Provide complete and detailed description of operation for each major system and its components. Provide information on locations of components, how to energize switches and controls, how components interface with other components, operation of controls including operational sequence, operational changes for summer or winter operation, how to accomplish the changeover, complete troubleshooting sequence, emergency operating sequences in event of major component failure and safeguards to indicate if equipment goes off-line.

Tab - 1.4 Maintenance and Lubrication Division:
Provide general maintenance and lubrication schedule for each major system and components. Include daily, weekly, monthly, semi-annual and yearly checks and tasks. Provide material received in compliance with clause "Submittals" and integrate with maintenance description.

Tab - 1.5 List of Equipment Suppliers and Contractors:
Provide list of equipment suppliers and contractors, including address and telephone number. Outline procedures for purchasing parts and equipment.

Tab - 2.1 Certification:
Secure copies of inspection certification from authorities.

Tab - 2.2 Testing:
Include copies of test data and start-up reports, including the following:

.1	Valve Directory and List	Section 23 05 54
.2	Spare Parts List and Certification of Receipt	Section 23 02 00
.3	Electrical Motor Schedule	Section 23 05 13
.4	Testing Results and Certifications	Section 23 08 00
.5	Air and Water Balancing Reports	Section 23 05 93
.6	Quality Control Reports for Special Pipe Jointing Systems	Section 23 05 01
.7	Vibration Isolation Inspector and Report by Manufacturer	Section 23 05 48
.8	Air Handling Equipment Start-up Reports and Reports and Certification by Manufacturer	Section 23 73 13
.9	Ductwork - Interference Drawings	Section 23 31 14
.10	Air Silencers Installation Report by Manufacturer	Section 23 33 19
.11	Controls Start-up, Calibration and Testing	Section 23 09 00

Tab 3.0 Shop Drawings

Tab 4.0 Balance Reports:
Secure copies of final air and water systems balance report and include in this division as one single submission, complete with title page, index and site data.

Tab 4.1 Air Balance

Tab 5.0 Component Information

Tab 6.0 Spare Parts:
Include listing of recommended spare parts as outlined in Section 23 02 00.

.6 Assemble data for controls, operating and maintenance in a separate manual. Refer to Section 23 09 33.

Control System Software

Prepare and submit Control System Software information consisting of the following:

.1 System Introduction

.1 Provide a brief description of overall control philosophy.

.2 Describe hardware interlocks with other equipment that may affect or override action of software control modules.

.3 Describe procedure for operating staff to interface with software control modules to override system or component operation, to adjust system or building control setpoints, etc. Name virtual points provided in software for this purpose and recommend adjustment increments and limits where applicable.

.2 System Schematic: provide a labelled schematic indicating locations, point mnemonics, and proper names of physical control points in system. Include RCU panel wiring diagrams with field point termination addresses. Good quality shop drawings may be used for this purpose.

.3 Software Modules:

.1 For each module provide a description of purpose and logic of module.

.2 Provide a table listing Input and Output Variables used by module on "Control Software Input/Output Variable Table".

.3 Provide description of each software Input and Output Variable on "Point Mnemonic Descriptions" sheet.

.4 Provide hardcopy listing of software module.

.7 The divider tabs shall be laminated mylar plastic and coloured according to Section. The colouring is as follows: Mechanical Systems - 1.0-1.6 Orange; Certification - 2.0-2.7 Green; Shop Drawings and Maintenance - 3.0-3.17 Yellow; Balancing .1 and .2 Blue; Component Information - Blue. Plastic tabs with typewritten card insertions will not be accepted.

.8 Submit documents to the Consultant for approval prior to transmitting to the Owner.

3.2 RECORD DRAWINGS

.1 Refer to Division 1, Contract Close-Out.

.2 Mechanical trade shall maintain on site, an extra set of drawings and specifications for recording changes and variations daily, as well as all addendum revisions and change orders. Forward marked up set to documentation agent.

.3 Identify location of fire dampers, major control lines, access doors, tagged valves, systems concealed in walls or ceilings including cleanouts and service valves. List valve numbers in consistent with valve tag list.

.4 Enter dimensions from building line to all buried services, including co-ordinates of manholes, catch basins, tanks, outside shut-off valves and other similar elements.

.5 Service connections to water and sewer lines entering a building shall be recorded as to horizontal dimension from a convenient building element with suitable depth elevations relating to main floor level and sea level datum.

.6 Sewer and water lines which are placed beneath floor slabs shall be located such that each point of entry, change in direction and irregularity is located by dimension from column grid lines. Survey and record elevations of underslab piping every 3 m.

.7 Note any unidentified found objects not indicated on drawing which are revealed as a result of excavation, i.e., pipes, ducts. etc.

.8 Transfer all site changes and information onto mylar sepias. Allow for Consultant's cost.

3.3 TURNOVER SEMINAR

.1 Organize and conduct a one (1) day seminar to instruct the Owner and his representatives in the operation and general preventative maintenance of equipment and systems provided at the completion of the project.

.2 Provide services of qualified personnel, including each sub-trade, each major equipment supplier and design Consultant to attend seminar and instruct on his equipment or system. Seminar shall be chaired and conducted by the documentation agent.

.3 Submit agenda schedule and list of representatives to the Consultant for approval thirty (30) days prior to seminar. Confirm attendance of seminar by written notification to all participants, followed by verbal confirmation just prior to seminar date.

.4 At seminar, submit final copies of record drawings and operating and maintenance manuals to Owner.

.5 Submit a written follow-up of the seminar, complete with an attendants list to the Consultant.

END OF SECTION

1. General

1.1 RELATED REQUIREMENTS

.1 Comply with requirements of Section 01 74 11, Spare Parts and Maintenance Materials.

2. Products

2.1 SPARE PARTS AND MAINTENANCE MATERIALS SCHEDULE

.1 Provide the following spare parts:

Item			***Quantity***
.1	Air Filters:		
	.1	Air system, complete replacement set of air filters	1 for each system
.2	Valves:		
	.1	Washers	1 for each valve size & type
	.2	Seats	1 for each valve size and type
.3	Controls:		
	.1	Electric motor operators	1 for each size
.4	Belt Driven Equipment:		
	.1	Belts	1 of each type and size

2.2 EQUIPMENT AND TOOLS

.1 Unless specified otherwise, provide one of each of the following equipment and tools to facilitate proper operation and maintenance of mechanical equipment and systems:
- .1 Gas cock wrenches. Provide one wrench for every four gas cocks of each size.
- .2 Key/screwdriver for security grille access.
- .3 Thermostat adjustment kit.
- .4 Pressure/temperature gauge test kit specified in Section 23 05 21.

3. Execution

3.1 DELIVERY

.1 Delivery spare parts and maintenance materials to project site or other location designated by Owner or Consultant.

END OF SECTION

1. General

1.1 RELATED REQUIREMENTS

.1	Mechanical General Requirements	Section 21 05 00
.2	Documentation	Section 23 01 00

1.2 RELATED WORK SPECIFIED IN OTHER SECTIONS

.1	Valves	Section 23 05 23

1.3 COORDINATION WITH WORK SPECIFIED IN OTHER SECTIONS

.1 Coordinate piping installation routes and elevations with installation of sprinkler, sheet metal and electrical work.

1.4 PRODUCT OPTIONS AND SUBSTITUTIONS

.1 Refer to Division 1 for requirements pertaining to product options and substitutions.

1.5 WELDING QUALIFICATIONS

.1 Conform to ASME Section IX and Alberta Boilers Safety Association (ABSA).

.2 Use only ABSA certified pressure welders and procedures on high pressure steam piping work.

1.6 WELDING PROCEDURES

.1 Conform to ANSI/ASME B31.9 Building Services Piping, ANSI/ASME B31.1, ANSI B16.25.

.2 Conform to ASME B31.1 Power Piping for High Pressure Steam Piping Installations.

1.7 SYSTEM FABRICATION CODES AND STANDARDS

.1 Fabricate piping systems in accordance with Alberta Regulation 49/2006, Safety Codes Act, Pressure Equipment Safety Regulation:

.2 Natural gas and propane to CSA B149.1.

.3 Propane liquid phase to ANSI B31.3.

1.8 SUBMISSIONS

.1 Prepare and submit applications to Alberta Boilers Safety Association (ABSA) for registration, consistent with Alberta Regulation 49 Safety Codes Act, Pressure Equipment Safety Regulation (latest edition).

1.9 CONTRACTORS QUALITY CONTROL

.1 For the following joint systems:

.1 Mechanically Formed Connections
.2 Grooved Joints

.2 All grooved joint couplings, fittings, valves, and specialties shall be the products of a single manufacturer. Grooving tools shall be of the same manufacturer as the grooved components.
.1 All castings used for coupling housings, fittings, valve bodies, etc., shall be date stamped for quality assurance and traceability.

.3 Retain services of joint system supplier to:
.1 Prior to proceeding with work, review piping system with Consultant and instruct the workmen installing the piping on the correct use of the jointing system. Review support, anchor, guide, requirements and provisions for expansion.
.2 The grooved coupling manufacturer's factory trained representative shall provide on-site training for contractor's field personnel in the use of grooving tools and installation of grooved joint products. The representative shall periodically visit the jobsite and review contractor is following best recommended practices in grooved product installation. (A distributor's representative is not considered qualified to conduct the training or jobsite visit(s).)
.3 Inspect **[10%]** random samples of installed joints.
.4 Submit a report describing findings of the inspection to the Consultant.

2. Products

2.1 PRODUCT SELECTION

.1 Pipe and pipe fittings are specified by system.

.2 Within each system one or more materials may be specified. Unless otherwise specified, any of the specified pipe, fitting and joint materials may be used in construction of the system.

2.2 NATURAL GAS SYSTEMS (INSIDE BUILDING)

.1 Ferrous
.1 Pipe:
.1 Black Steel Pipe: electric resistance welded, schedule 40 to ASTM A53, Grade B.
.2 Fittings:
.1 Malleable Iron Threaded Fittings: to ANSI B16.3 (for pipe diameters up to and including 50 mm).
.2 Wrought Steel Butt Welding Fittings: to factory made ANSI B16.9.
.3 Joints:
.1 Steel Flanges and Fittings: to ANSI B16.5.
.2 Unions: to ANSI B16.9.

3. Execution

3.1 PREPARATION AND ASSEMBLY

.1 Use only long radius elbows.

.2 Connections for 50 mm piping may be either screwed or welded.

.1 Pipe diameters less than 50 mm use screwed connections.
.2 Pipe diameters greater than 50 mm use welded connections.
.3 On galvanized piping systems use only screwed fittings.

.3 Ream piping and tubing, clean off scale and dirt inside and outside before assembly. Remove welding slag or other foreign material from piping.

3.2 TEEING OFF MAIN LINE - STEEL PIPE SYSTEM

.1 Mains 150 mm and smaller:
.1 Use saddle type connections where main is at least one size larger than branch.
.2 Use direct connection where branch is at least three sizes smaller than main.

.2 Mains 200 mm and larger:
.1 Use saddle type connections where main is at least two sizes larger than branch.
.2 Use direct connection for branches 65 mm and smaller.
.3 Do not project branch pipe inside main line.

3.3 MECHANICALLY FORMED CONNECTIONS, COPPER PIPE

.1 Mechanically formed tee connection with brazed joints may be used in lieu of tee fittings in copper tubing provided they meet the following:

.1 Size and wall thickness of main tube and branch tube are listed by manufacture of forming equipment as an acceptable application.
.2 Height of drawn collar is not less than three times wall thickness of main tubing.
.3 End of branch tube is notched to conform to inner curve of main tube and dimpled to set exact penetration depth into collar.
.4 Resulting joint is minimum of three times as long as thickness of thinner joint member and brazed.

3.4 UNIONS

.1 Make connections to equipment and branch mains with unions.

.2 Unions are not required in installations using grooved mechanical joint couplings. (The couplings shall serve as unions and disconnect points.)

.3 Unions 50 mm and smaller:
.1 Malleable iron unions, 1035 kPa with bronze to iron ground joint union for threaded ferrous piping.
.2 Bronze unions for copper piping.
.3 Provide air tested unions for gas service.

.4 Unions 65 mm and larger:
.1 Forged steel slip on flanges for ferrous piping (1030 kPa).

.2 Bronze flanges for copper piping (1030 kPa).
.3 For gas service, provide synthetic rubber.

3.5 NON-FERROUS PIPING CONNECTIONS

.1 Use non-toxic joint compound on potable water lines.

.2 Provide non-conducting type connections wherever joining dissimilar metals. Brass adaptors and valves are acceptable.

.3 Coat brass fittings used underground with an asphaltic compound to prevent dezincification.

.4 Underground copper piping shall be connected using copper to copper flare coupling. Joints are not permitted under grade.

3.6 GAS PIPING

.1 Use isolating gas cocks on primary gas line installed with isolating union at outlet.

.2 Bond interior gas piping to electrical system ground conductor to maintain gas piping at electrical system ground.

.3 For piping which will be buried, use piping with welded fittings with factory or site applied plastic jacketing.

.4 Apply heat shrink plastic jacketing to joints on buried piping.

.5 Install gas piping in open or ventilated spaces. Pitch lines and provide drip legs for condensation and dirt at appliance connection. Where gas piping is run in a concealed space, provide ventilation grilles to CAN/CSA B149.1.

3.7 ROUTES AND GRADES

.1 Route piping in an orderly manner and maintain proper grades.

.2 Install piping to conserve headroom and interfere as little as possible with use of space.

.3 Route above grade piping parallel to walls.

.4 Group piping wherever practical at common elevations. Provide adequate clearances to allow for insulation.

.5 Install concealed pipes close to building structure to keep furring to a minimum. In finished areas install piping in areas which will furred in.

.6 Slope hydronic and domestic water system piping at 0.2% and arrange to drain at low points.

.7 On closed loop water systems, equip low points with 20 mm drain valves and hose nipples. At high points, provide collecting chambers and high capacity float operated automatic air vents.

.8 Slope steam piping at 0.5% and condensate piping at 0.7% down in direction of flow. Provide drip trap assembly at low points and at points where condensate lines from traps to nearest condensate receiver. Where condensate lines form a trap, provide vent loop over trapped section.

.9 Make reductions in water, steam and condensate piping with eccentric reducing fittings to provide clear drainage and venting.

.10 Grade horizontal sanitary and storm drainage vent piping at 2% minimum.

3.8 PLASTIC PIPE INSTALLATION

.1 Note PVC-DWV is not permitted to be installed in the following applications:
- .1 High buildings, as defined in the Alberta Building Code.
- .2 A ceiling plenum used for return air.
- .3 A vertical shaft.

.2 Comply to all requirements defined in the Alberta Building Code.

3.9 INSTALLATION REQUIREMENTS

.1 Install piping system in accordance with the following:

.1 Natural gas distribution system: to CAN/CGA B149.1.

.2 Install piping to allow for expansion and contraction without exceeding maximum allowable stresses for pipe and equipment flanges.

.3 Provide clearance for proper installation of insulation and for access to valves, air vents, drains and unions.

.4 Provide all offsets required to install piping systems within the physical limitations of the building.

END OF SECTION

1. General

1.1 RELATED REQUIREMENTS

.1 General Mechanical Provisions — Section 21 05 00
.2 Electrical Connection of Equipment — Division 26

1.2 MOTOR SIZES

.1 Motor sizes in this Section are stated in "preferred metric units".

1.3 PRODUCT OPTIONS AND SUBSTITUTIONS

.1 Refer to Division 1 for requirements pertaining to product options and substitutions.

1.4 SHOP DRAWINGS AND PRODUCT DATA

.1 Comply with requirements of Section 21 05 00.

.2 Submit a schedule of motors for all mechanical equipment, listing the following data:

- .1 Equipment name and number
- .2 Motor size
- .3 Frame size
- .4 Electrical characteristics, including voltage, phase, full load amps, locked rotor amps and all unique requirements
- .5 Motor design
- .6 Insulation class
- .7 Temperature rise as specified by insulation class
- .8 Continuous service factor
- .9 Guaranteed minimum efficiency and power factor at 75% and 100% of full load
- .10 Enclosure type

.3 Submit certification from motor manufacturer that air flow cooling the motors used on AC variable speed drives is adequate down to 10% of nameplate rated speed.

1.5 MANUFACTURING STANDARDS

.1 Manufacturer motors to EEMAC Standard for AC induction motors (M1-6 Motors and Generators).

.2 All motors shall be CSA approved and labelled.

2. Products

2.1 ACCEPTABLE MANUFACTURERS AND PRODUCTS

.1 CGE, Westinghouse, Leroy Somer, Toshiba, Lincoln, Baldor

2.2 DESIGN

.1 Single phase and three phase motors to be EEMAC Design B, squirrel cage induction type for general purpose duty.

.2 Motors suitable for operation with voltages and starters specified in Division 26.

2.3 ENCLOSURE TOTALLY ENCLOSED FAN COOLED (TEFC)

.1 Provide TEFC on motors unless otherwise specified in equipment schedules.

2.4 FRAME

.1 Construction: "T" frame, rigid and machined to keep all parts in alignment under full load.

.2 Material: cast iron or steel (no aluminum).

2.5 END BRACKETS

.1 Material: Cast iron or steel (no aluminum).

2.6 BEARINGS

.1 Type: anti-friction deep groove ball or roller bearing. Provide grease lubrication fittings on frame 254T and larger.

.2 Life: bearing life based on no external radial or axial load as follows:
.1 3600 r/min: 30,000 h
.2 1800 r/min and less: 60,000 h

2.7 INSULATION

.1 Minimum Class "B" insulation on all motors unless otherwise noted.

.2 Class "F" insulation with Class "B" temperature rise on motors driven by AC variable speed drive. Motor insulation to NEMA MG-1-1993, Part 31.

2.8 EFFICIENCY

.1 Provide motors on mechanical equipment that meet or exceed NEMA “Premium” efficient rates or the efficiencies listed as follows whichever is greater:

Motor Size kW	*Minimum Motor Full Load Efficiency (%) @ 1800 r/min*
.75	85.5
1.12	87.5
1.5	86.5
2.23	89.5
3.73	90.5
5.56	91.0
7.46	91.0
11.2	92.4
14.9	93.0
18.6	93.6
22.4	94.1
29.8	94.5
37.3	94.5
44.7	95.0
56.	95.0

74.6	95.0
93.2	95.8

2.9 SERVICE FACTOR

.1 Minimum continuous service factor of 1.15 for all non-explosion proof motors.

.2 Minimum continuous service factor of 1.0 for all explosion proof motors.

2.10 THERMAL PROTECTION

.1 Provide thermistor including protection, one per phase, with tripping device on the following motors:

.1 Motors used with variable frequency drives.
.2 Motors 37 kW and larger.

2.11 TWO SPEED MOTORS

.1 Construction: two winding, with each winding designed to operate at one speed.

.2 Characteristics: variable torque motor with power to vary directly as the square of the speed.

3. Execution

3.1 INSTALLATION

.1 Provide factory mounted industrial grade motors on motor driven equipment.

.2 Allow adequate space for servicing motors and for removal of motors from motor driven equipment.

3.2 COORDINATION

.1 Confirm electrical characteristics and requirements with the Electrical Trade for all motors including voltage, phase and their compatibility with motor control centers.

.2 Submit motor schedule defined in Article 1.4 as early as possible.

3.3 EQUIPMENT SCHEDULES AND DRAWINGS

.1 Refer to all drawings and schedules of equipment and motor driven equipment listed in Division 21, Mechanical.

.2 Refer to electrical specifications (Division 26) for voltage, phase, and cycle.

3.4 ALIGNMENT

.1 Adjust axial and differential alignment of motor with driven equipment to ensure vibration free operation.

END OF SECTION

1. General

1.1 RELATED REQUIREMENTS

.1 Mechanical General Requirements Section 20 00 13

1.2 RELATED WORK SPECIFIED IN OTHER SECTIONS

.1 Pipe and Pipe Fittings Section 20 20 10

1.3 PRODUCT OPTIONS AND SUBSTITUTIONS

.1 Refer to Division 1 for requirements pertaining to product options and substitutions.

1.4 VALVE SIZES

.1 Valves sizes are specified in preferred metric sizes.

1.5 ABBREVIATIONS

.1 OS&Y: Outside Screw and Yoke.

1.6 QUALITY ASSURANCE

.1 Provide valves of **[commercial/ institutional]** standard on this project.

.2 Submit samples prior to ordering.

.3 The Consultant's decision to acceptable standard and quality will be final.

.4 All castings used for coupling housings, fittings, valve bodies, etc., shall be date stamped for quality assurance and traceability.

1.7 SOURCE OF SUPPLY

.1 Valves of same type shall be by a single manufacturer.

1.8 IDENTIFICATION

.1 Valves shall bear the following information permanently marked on valve body:
- .1 Manufacturer's name or trademark.
- .2 Pressure rating.
- .3 Flow direction.

1.9 SHOP DRAWINGS AND DOCUMENTATION

.1 Comply with requirements of Section 21 05 00 and 23 01 00.

.2 Submit valve schedule before ordering.

2. Products

2.1 ACCEPTABLE MANUFACTURERS AND PRODUCTS

.1 Globe Valves: Crane, Hattersley, Jenkins, Lunkenheimer, Crane McAvity, Persta, Rockwell, Velan, Walworth, Toyo, Watts, Kitz, Milwaukee, MAS, Nibco, Vogt, RP&C, Bonney Forge

.2 Ball Valves: Victaulic (grooved end valves), Jenkins, Toyo, Crane, Hattersley, MAS, Kitz, Milwaukee, Nibco, Grinnell, American Valve (Series 4000), Apollo, Fortune

.3 Butterfly Valves: Crane, Demco, DeZurik, ITT Grinnell, Jenkins, Keystone, Norris, Victaulic (grooved end valves), Toyo, Hattersley, Milwaukee, Bray, Nibco, Flowseal, Mueller, Apollo, Kitz

.4 Check Valves: Center Line, DeZurik, Mueller, Singer, Watts, Moygro, Milwaukee, Val-Matic, Nibco, Victaulic (grooved end valves),, Apollo, Duo-Check II, Conbraco, Newman Hattersley, Mueller Steam Specialties, Bonney Forge

.5 Gate Valves: Crane, Toyo, Jenkins, Kitz, Milwaukee, Hattersly, Grinnell

.6 Relief Valves: Consolidated, Crosby Aston, Farris, Kunkle, Singer, Watts

.7 Circuit Balancing Valves: Armstrong, Tour & Andersson, Victaulic.

2.2 SERVICE REQUIREMENTS

.1 Provide valves with pressure/temperature ratings and materials of construction suitable for the service intended.

2.3 GATE VALVES

.1 Isolating Service, hydronic, domestic water, low pressure steam and condensate 50 mm and smaller (up to 103.4 kPag):
- .1 Body: B62 bronze, MSS SP-80
- .2 Stem: B584 bronze
- .3 Disc: B62 bronze solid wedge
- .4 Bonnet: screwed B62 bronze
- .5 Class 125
- .6 Acceptable product: Crane Figure 1700, rising stem, threaded

.2 Isolating Service, hydronic, domestic water, low pressure steam and condensate 65 mm and larger (up to 103.4 kPag):
- .1 Body: cast iron, ASTM A126, class B
- .2 Stem: bronze
- .3 Disc: solid wedge, bronze seat rings
- .4 Bonnet: bolted
- .5 Class 125
- .6 Acceptable product: Crane Figure 465½, flanged, outside screw and yoke

.3 Isolating Service, high pressure steam and condensate 50 mm and smaller (above 103.4 kPag):

.1 Body: B61 bronze, MSS SP-80
.2 Stem: B371 bronze
.3 Disc: B61 bronze, solid wedge
.4 Bonnet: Union B61 bronze
.5 Class 300
.6 Acceptable product: Crane Figure 622E, rising stem, threaded

.4 Isolating Service, high pressure steam and condensate 65 mm and larger (above 103.4 kPag):
.1 Body: cast steel, ASTM A126
.2 Stem: 410 stainless steel
.3 Disc: CA-15, flexible wedge
.4 Bonnet: bolted
.5 Class 300
.6 Acceptable product: Crane Figure 33, flanged, outside screw and yoke

2.4 GLOBE VALVES

.1 Throttling Service, hydronic, domestic water, steam and condensate services 50 mm and smaller (up to 103.4 kPag):
.1 Body: B62 bronze, MSS SP-80
.2 Stem: B62 bronze
.3 Disc: stainless steel
.4 Bonnet: Union, B62 bronze
.5 Class 150
.6 Acceptable Products: Crane figure 14½ P, threaded, rising stem

.2 Throttling Service, hydronic, domestic water, low pressure steam and condensate 65 mm and larger (up to 103.4 kPag):
.1 Body: cast iron, MSS SP-85 type 1
.2 Stem: bronze
.3 Disc: solid bronze
.4 Bonnet: bolted
.5 Class 125
.6 Acceptable Products: Crane figure 351, flanged outside screw and yoke, rising stem

.3 Throttling Service, high pressure steam and condensate, 50 mm and smaller (up to 103.4 kPag):
.1 Body: B61 bronze, MSS SP-80
.2 Stem: bronze
.3 Disc: stainless steel
.4 Bonnet: Union
.5 Class 300
.6 Acceptable Products: Crane figure 382 P, threaded, rising stem

.4 Throttling Service, high pressure steam and condensate, 65 mm and larger (up to 103.4 kPag):
.1 Body: carbon steel, ASTM A216
.2 Stem: 410 stainless steel
.3 Disc: CR Overly
.4 Bonnet: bolted
.5 Class 300

.6 Acceptable Products: Crane figure 351, flanged outside screw and yoke, rising stem

2.5 BALL VALVES

.1 Isolating Service, 50 mm or smaller:
- .1 Body and Trim: B62 bronze, B16 brass, or cast iron, MSS SP-110
- .2 Stem: chrome-plated brass or stainless steel
- .3 Connection: screwed ends, Vic-Press ends, soldered ends, or flanged
- .4 Seats: Buna up to 90°C, EPDM to 110°C, Viton up to 150°C, Teflon up to 180°C, PTFE up to 204°C
- .5 Ball: brass chrome plated or teflon impregnated cast iron
- .6 Acceptable Product: Victaulic Series 589 / PL300; Crane CSC 9202, 9222

2.6 BUTTERFLY VALVES

.1 Isolating or Throttling Service:
- .1 Body: Ductile or cast iron
- .2 Stem: 316 or 416 stainless steel, 300 Series; stem shall be offset from the disc centerline to provide full 360-degree circumferential seating.
- .3 Disc: [electroless-nickel plated ductile iron] [aluminum bronze] [316 stainless steel]
- .4 Liner: EPDM to ASTM D2000-80, Grade E; rated to +120°C in sizes through 300 mm.
- .5 Connection: flanged or grooved ends
- .6 Acceptable Product: Victaulic MasterSeal™ and AGS Vic300 grooved end style, or Crane 4452L, lug style

.2 Heating Systems with temperatures 93°C and greater:
- .1 Body: Ductile or cast iron
- .2 Stem: stainless steel, stem shall be offset from the disc centerline to provide full 360-degree circumferential seating.
- .3 Disc: [electroless-nickel plated ductile iron] [aluminum] [bronze] [316 stainless steel]
- .4 Liner: EPDM rated for continuous operation at 120°C
- .5 Connection: flanged or grooved ends
- .6 Acceptable Product: Victaulic MasterSeal™ grooved end style or Crane 44BXZL, lug style

2.7 CHECK VALVES

.1 Swing Check Valve 50 mm and smaller:
- .1 Body: B62 bronze Y pattern, MSS SP-80
- .2 Trim: bronze
- .3 Disc: swing, B16 brass, B61 bronze
- .4 Connection: screwed or soldered
- .5 Material: ASTM A26
- .6 Acceptable Product: Crane figure 37/1342 (class 125), Crane figure 76E (class 300)

.2 Swing Check Valves 65 mm and larger:
- .1 Body: iron Y pattern, MSS SP-71
- .2 Trim: stainless steel or bronze
- .3 Disc and Seat: renewable, swing, stainless steel, bronze, or cast iron

.4 Connection: flanged or grooved ends
.5 Material: ASTM A26 or A536
.6 Acceptable Product: Victaulic Series 712 (300 psi / 2065 kPa), Crane figure 373 (class 125)

.3 Swing Check Valve, high pressure steam and condensate, 65 mm and larger (above 103.4 kPag):
.1 Body: carbon steel
.2 Disc: swing, 13% CR
.3 Connection: flanged
.4 Material: ASTM A216
.5 Acceptable Product: Crane figure 159

.4 Wafer Check Valve 65 mm and larger:
.1 Body: cast iron
.2 Trim: bronze
.3 Connection: threaded lugs, grooved ends
.4 Acceptable Product: Crane Unicheck 12A1330

.5 Lift Check Valve 65 mm and larger:
.1 Body: cast iron
.2 Trim: bronze
.3 Connection: flanged ends, grooved ends
.4 Use: vertical piping

2.8 SPRING LOADED CHECK VALVES

.1 50 mm and smaller:
.1 Body: bronze
.2 Stem: brass
.3 Spring: beryllium copper
.4 Disc and Seat: teflon
.5 Connection: screwed
.6 Acceptable Products:
Vertical: Crane figure 29, brass disc and seat or Victaulic Series PL300 (200 psi CWP / 1380 kPa),
Horizontal: Crane figure 27TF, PTFE disc

.2 65 mm and larger:
.1 Body: ductile iron or cast iron
.2 Seat: bronze or stainless steel
.3 Plug: bronze
.4 Spring: stainless steel
.5 Connection: flanged wafer, grooved ends
.6 Acceptable Product: Victaulic Series 716 / W715 or Crane Duocheck G12 HMP

2.9 RADIATION VALVES

.1 Isolation or throttling service, 30 mm and smaller:
.1 Body: bronze, ball type
.2 Stem: inside screw
.3 Disc: renewable composition
.4 Connection: threaded or union ends (straight or angle pattern)

2.10 HOSE BIBBS

.1 Standard Type Hose Bibbs:
- .1 Body: bronze or red brass
- .2 Disc: replaceable hexagonal
- .3 Spout: with hose thread
- .4 Finish: chrome plated on exposed surfaces
- .5 Backflow Prevention: hose vacuum breaker device, single check with atmospheric vacuum breaker vent

.2 Non-Freeze Type Hose Bibbs:
- .1 Body: bronze
- .2 Disc: replaceable
- .3 Spout: with hose thread
- .4 Finish**:** polished bronze
- .5 Style: wall plate or recessed box and removable key
- .6 Backflow Prevention: hose vacuum breaker device, single check with atmospheric vacuum breaker vent.

2.11 PLUG COCKS

.1 50 mm and smaller:
- .1 Body: cast iron
- .2 Plugs and Washers: brass
- .3 Connection: screwed ends

.2 65 mm and larger:
- .1 Body: cast iron
- .2 Plug: cast iron
- .3 Lubrication: pressure lubricated
- .4 Connection: flanged ends

2.12 DRAIN/VENT VALVES

.1 Globe Type Drain Valves:
- .1 Body: bronze
- .2 Disc: compression stop
- .3 Ends: nipple and cap or hose

.2 Ball Type Drain Valves:

- .1 Body: bronze
- .2 Ends: cap and chain

3. Execution

3.1 INSTALLATION

.1 Install valves with stems in upright or horizontal position. Do not install stems in inverted position.

.2 Install valves to be readily accessible.

3.2 VALVE OPERATORS

.1 Provide suitable die-cast handwheels for globe, radiation, drain valves and inside hose bibbs.

.2 Supply one plug cock wrench for every ten plug cocks 50 mm and smaller; supply wrench and set screws with each plug cock 65 mm and larger.

.3 Provide latch lock throttling handle for butterfly valves 150 mm and smaller and gear operators for 200 mm and larger.

3.3 VALVE SCHEDULE

.1 Provide valves as indicated on the drawings and as outlined in the following schedule:

.1 Gate Valves
- .1 Isolation service

.2 Globe Valves:
- .1 Throttling service
- .2 Control device
- .3 Meter bypass
- .4 Steam services

.3 Swing Check Valves:
- .1 Discharge of pumps

.4 Spring Loaded Check Valves:
- .1 Discharge of condenser water pumps
- .2 Water booster pumps
- .3 Condensate pumps

.5 Non-Lubricated Plug Cocks:
- .1 Gas service
- .2 Balancing service where shut-off or isolating valve is also provided

.6 Drain Valve:
- .1 Near main shut-off valves
- .2 Low points in piping systems
- .3 Bases of vertical risers
- .4 At equipment

.7 Butterfly Valves:
- .1 Interchangeable with gate and globe valves in water systems only

.8 Ball Valves:
- .1 Shut-off and isolation
- .2 Isolating service
- .3 Low water cut-offs
- .4 Boiler drains
- .5 Chemical pot feeders
- .6 Domestic water (hot and cold)
- .7 Heating system water
- .8 Glycol system

.9 Steam service isolation (up to 172 kPa (25 psi)].

.9 Circuit Balancing Valves:
- .1 On hydronic piping systems where shown on drawings.
- .2 On domestic hot water recirculation systems.

.10 Radiation Valves and Ball Valves:
- .1 Heating/cooling coils
- .2 Isolation of unit heaters and force flows

END OF SECTION

1. General

1.1 RELATED REQUIREMENTS

.1	Mechanical General Requirements	Section 21 05 00
.2	Excavation and Backfill	Section 02219

1.2 RELATED WORK SPECIFIED IN OTHER SECTIONS

.1	Pipe and Pipe Fittings	Section 23 05 01
.2	Mechanical Vibration Control	Section 23 05 48
.3	Piping and Equipment Insulation	Section 23 07 19
.4	Ductwork	Section 23 31 14

1.3 PRODUCT OPTIONS AND SUBSTITUTIONS

.1 Refer to Division 1 for requirements pertaining to product options and substitutions.

1.4 SHOP DRAWINGS

.1 Comply with requirements of Section 21 05 00.

1.5 DETAIL DRAWINGS

.1 The following drawings are appended hereto and form a part of this Section:

No.	*Name*
23 05 29 D01	Pipe Supports (Types 1-20)
23 05 29 D02	Pipe Supports (Types 21-41)
23 05 29 D03	Pipe Supports (Types 42-58)

1.6 PIPE SUPPORT SYSTEM DESIGN

.1 Ensure pipe hanger assemblies are fastened to the building structure without drilling or welding structural components or causing excessive point loads on the structure.

.2 Review support system with Consultant prior to installation and submit the following:
- .1 Location and load of pipe on roof.
- .2 Location and load of pipe supports on all piping 100 mm and larger and on all trapeze hangers.
- .3 Method of connections to building structure.
- .4 Vertical riser support system.

2. Products

2.1 INSERTS AND FASTENERS

.1 Cast in place inserts: malleable iron or steel shell and expander plug for threaded connection with lateral adjustment, top slot for reinforcing rod, lugs for attaching to forms.

.2 Expansion style "quick-bolts": to ASTM A108.

.3 Percussion type fastener: galvanized plated surface, chromate treated.

.4 Insert style fasteners: to ASTM A307.

2.2 PIPE SUPPORTS

.1 Refer to detail drawings 23 05 29 DO1, 23 05 29 DO2 and 23 05 29 DO3 Pipe Supports for Support Assemblies.

.2 Material and Finish: steel, prime coated or hot dip galvanized.

2.3 HANGER RODS

.1 Material: hot rolled carbon steel, minimum diameter of 10 mm.

.2 Safety Factor: minimum 5:1 and to Table 121.2.2 of ANSI B31.1.

.3 Threading: as required to accommodate final pipe gradients and installation.

.4 Finish: factory prime coat or hot dip galvanized.

3. Execution

3.1 INSTALLATION - GENERAL

.1 Install supports to secure equipment in place, prevent vibration, maintain grade and allow for expansion and contraction.

.2 Install rubber vibration isolators on piping supports in drywall partitions. Refer to Section 23 05 48 and 22 42 02.

.3 Fasten supports to building structural steel system or to cast-in-place inserts in concrete construction.

.4 Provide insulation protection saddles (Type 39) with protection shields (Type 40) on insulated piping systems as defined in schedule.

.5 Locate support adjacent to equipment. Prevent excessive stresses on piping and equipment connections.

.6 Do not support piping from other piping or from equipment.

.7 For horizontally hung multiple pipe runs, use trapeze support assembly with pipe supports as scheduled. Space trapezes at intervals determined by minimum pipe sizes in run. See Horizontal Support Spacing, Article 3.4.

.8 On multiple pipe runs, allow minimum 12 mm clearance between finished pipes including insulation.

.9 Install hanger within 300 mm of horizontal and vertical elbows.

.10 Support vertical piping at every second floor level.

.11 Support riser piping independently of connected horizontal piping.

.12 Support vertical soil pipes at each floor at joint.

.13 Isolate between hanger or support and dissimilar metal piping.

.14 Support piping as defined in Schedule.

3.2 INSERTS

.1 Use steel or malleable concrete inserts (Type 18) for suspending hangers from reinforced concrete slabs and sides of concrete beams.

.2 Set steel or malleable concrete inserts (Type 18) in correct positions prior to pouring of concrete. Provide reinforcement rod in concrete for inserts carrying piping over 100 mm or ducts over 1500 mm wide.

.3 Finish flush with concrete surface where such surface will be a part of a finished area.

.4 Where inserts have been omitted on new construction, use expansion style quick bolts or percussion type fasteners on concrete slabs

3.3 HOUSEKEEPING PADS, SUPPORTS AND ANCHORS

.1 For major equipment, provide reinforced concrete housekeeping pads poured directly on floor slab, 100 mm thick minimum, extended 100 mm minimum beyond machinery bedplates. Provide templates, anchor bolts and accessories required for mounting and anchoring equipment.

.2 Construct supports of structural steel members or steel pipe and fittings. Brace and fasten with flanges bolted to structure.

.3 Provide rigid anchors for pipes immediately after flexible pipe connections to equipment, except where detailed otherwise. Refer to Section 22 11 10.

3.4 HORIZONTAL PIPE SUPPORT SPACING

.1 Support steel and copper single line piping as follows:

Nominal Pipe Size (mm)	***Maximum Distance Between Supports (m)***		
Pipe Material:	*Steel*	*Steel*	*Copper*
Service:	*(Water)*	*(Steam)*	*(Water)*
12 mm to 20	2.1	2.4	1.5
25	2.1	2.7	1.8
30	2.1	2.7	2.1
40	2.7	3.7	2.4
50	3.0	4.0	2.4
65	3.4	4.3	2.7
80	3.7	4.6	3.0
100	4.3	5.2	3.7
150	5.2	6.4	4.3
200	5.8	7.3	-
250	6.1	7.9	-
300	7.0	9.1	-

.2 Provide additional supports for concentrated loads such as valves, specialties and pipe fittings or changes in direction.

.3 Support horizontal exposed cast iron soil pipe and storm sewer pipe 3 m maximum space and as follows:
- at each pipe section
- at each change in direction
- at each branch connection

Note: Soil pipe and storm sewer pipe in crawlspaces and below structural slab on grade is considered “exposed”.

.4 Support plastic horizontal exposed soil pipe and storm sewer pipe:
- at intervals not exceeding 1.2 m
- at the ends of branches
- at changes of direction or at traps more than 1 m from the fixture drain

Note: Soil pipe and storm sewer pipe in crawlspaces and below structural slab on grade is considered “exposed”.

3.5 PIPE SUPPORT SCHEDULES

.1 Horizontal Single Pipe

.1 Hot and cold piping systems up to 120°C, insulated.

Size	*Hanger Types*
40 mm and smaller	1, 5, 7, 9, 10,
50 mm & 75 mm	1, 3
100 mm and larger	41, 43, 49

.2 Ambient piping systems, bare pipe.

Size	*Hanger Types*
40 mm and smaller	1, 3, 4, 5, 7, 9, 10, 24, 26
50 mm and larger	1, 3, 4, 5, 7, 9, 10

.2 Horizontal Multiple Pipe Runs on Trapeze

.1 Hot and cold piping systems up to 120°C, insulated.

Size	*Hanger Types*
Up to 50 mm	24, 26, 36, 37, 38
50 mm and larger	35, 44, 45, 46

.2 Ambient piping systems, uninsulated.

Size	*Hanger Types*
Up to 100 mm	24, 26, 36, 37, 38
150 mm and larger	35, 36, 37, 38

.3 Vertical Piping Runs

Size	*Hanger Types*

20 mm and smaller	12, 37
25 mm to 75 mm	8, 24
100 mm and larger	42, 24

.4 Fasteners to Building Structure as follows:

Concrete:	Type 18
Structural Steel:	Type 19, 20, 21, 23, 25, 28, 29, 30
Vertical Structure:	Type 31, 34

END OF SECTION

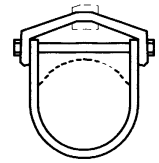

ADJ. STEEL CLEVIS HANGER TYPE–1

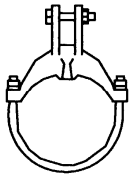

YORK TYPE PIPE CLAMP TYPE–2

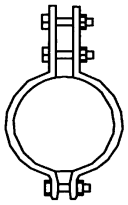

CARBON OR ALLOY STEEL DOUBLE BOLT PIPE CLAMP TYPE–3

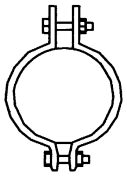

STEEL PIPE CLAMP TYPE–4

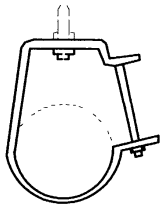

PIPE HANGER TYPE–5

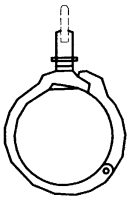

ADJ. SWIVEL PIPE RING SPLIT RING TYPE OR SOLID RING TYPE TYPE–6

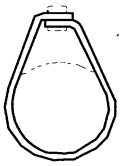

ADJ. STEEL BAND HANGER TYPE–7

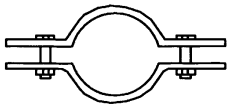

EXTENSION PIPE OR RISER CLAMP TYPE–8

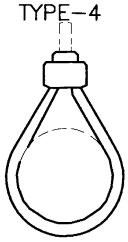

ADJ. BAND HANGER TYPE–9

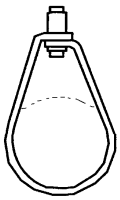

ADJ. SWIVEL RING BAND TYPE TYPE–10

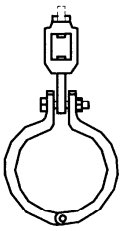

SPLIT TYPE RING W/WO TURNBUCKLE ADJ. TYPE–11

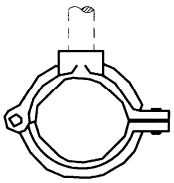

EXTENSION SPLIT PIPE CLAMP HINGED OR TWO BOLT TYPE–12

STEEL TURNBUCKLE TYPE–13

STEEL CLEVIS TYPE–14

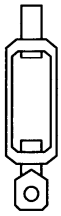

SWIVEL TURNBUCKLE TYPE–15

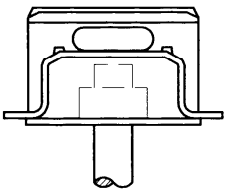

STEEL OR MALLEABLE CONCRETE INSERT TYPE–18

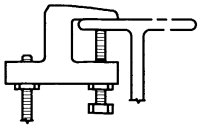

TOP BEAM C–CLAMP TYPE–19

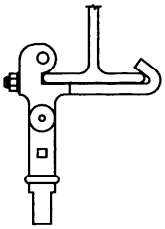

SIDE BEAM OR CHANNEL CLAMP TYPE–20

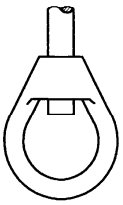

MALLEABLE IRON SOCKET TYPE–16

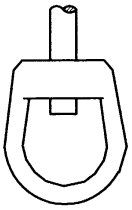

STEEL WELDLESS EYE NUT TYPE–17

D01
15061

PIPE SUPPORTS

N.T.S.

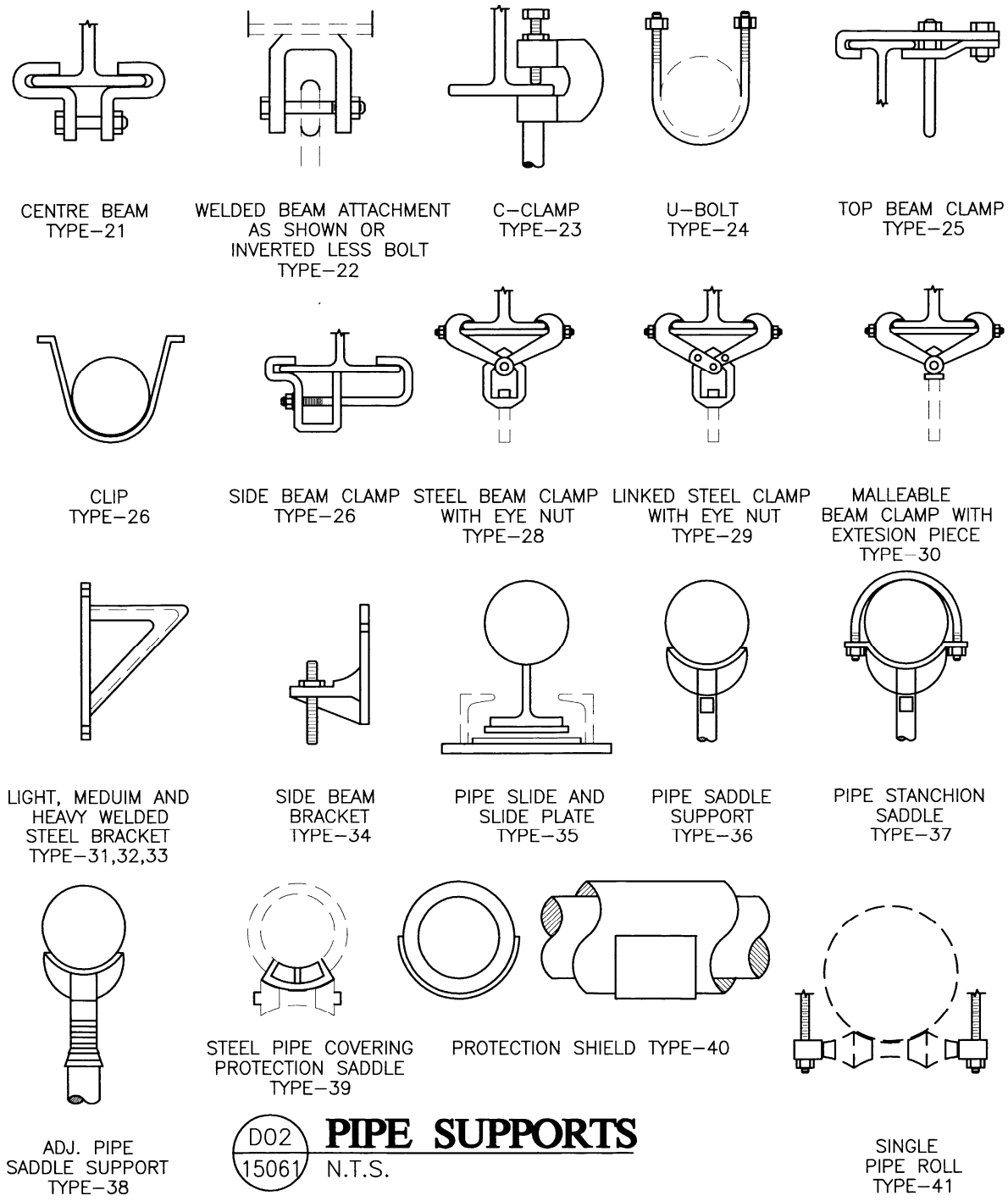
CENTRE BEAM TYPE–21
WELDED BEAM ATTACHMENT AS SHOWN OR INVERTED LESS BOLT TYPE–22
C–CLAMP TYPE–23
U–BOLT TYPE–24
TOP BEAM CLAMP TYPE–25
CLIP TYPE–26
SIDE BEAM CLAMP TYPE–26
STEEL BEAM CLAMP WITH EYE NUT TYPE–28
LINKED STEEL CLAMP WITH EYE NUT TYPE–29
MALLEABLE BEAM CLAMP WITH EXTESION PIECE TYPE–30
LIGHT, MEDUIM AND HEAVY WELDED STEEL BRACKET TYPE–31,32,33
SIDE BEAM BRACKET TYPE–34
PIPE SLIDE AND SLIDE PLATE TYPE–35
PIPE SADDLE SUPPORT TYPE–36
PIPE STANCHION SADDLE TYPE–37
ADJ. PIPE SADDLE SUPPORT TYPE–38
STEEL PIPE COVERING PROTECTION SADDLE TYPE–39
PROTECTION SHIELD TYPE–40
SINGLE PIPE ROLL TYPE–41
D02
15061
PIPE SUPPORTS
N.T.S.

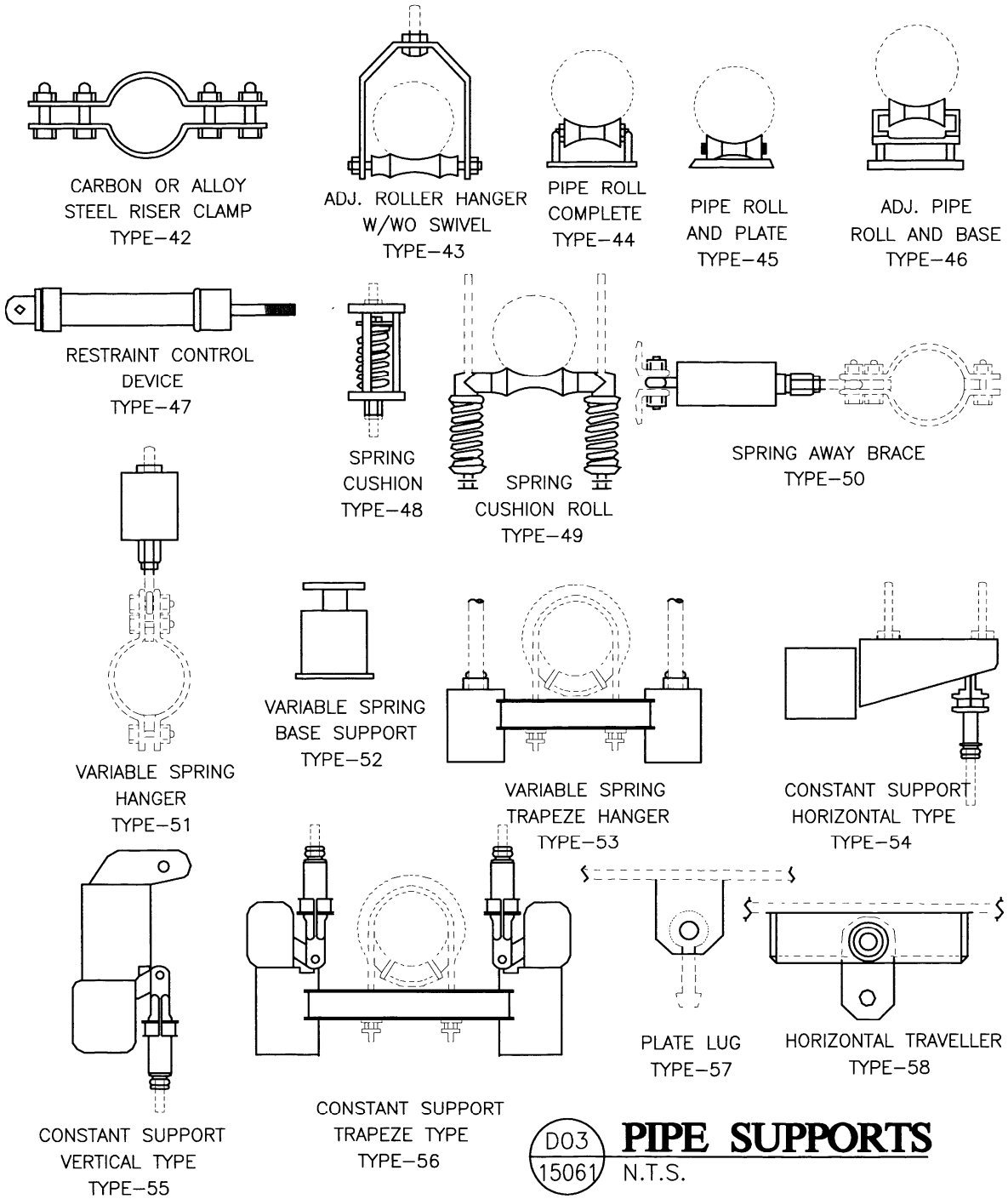
CARBON OR ALLOY STEEL RISER CLAMP TYPE–42
ADJ. ROLLER HANGER W/WO SWIVEL TYPE–43
PIPE ROLL COMPLETE TYPE–44
PIPE ROLL AND PLATE TYPE–45
ADJ. PIPE ROLL AND BASE TYPE–46
RESTRAINT CONTROL DEVICE TYPE–47
SPRING CUSHION TYPE–48
SPRING CUSHION ROLL TYPE–49
SPRING AWAY BRACE TYPE–50
VARIABLE SPRING HANGER TYPE–51
VARIABLE SPRING BASE SUPPORT TYPE–52
VARIABLE SPRING TRAPEZE HANGER TYPE–53
CONSTANT SUPPORT HORIZONTAL TYPE TYPE–54
CONSTANT SUPPORT VERTICAL TYPE TYPE–55
CONSTANT SUPPORT TRAPEZE TYPE TYPE–56
PLATE LUG TYPE–57
HORIZONTAL TRAVELLER TYPE–58
D03
15061
PIPE SUPPORTS
N.T.S.

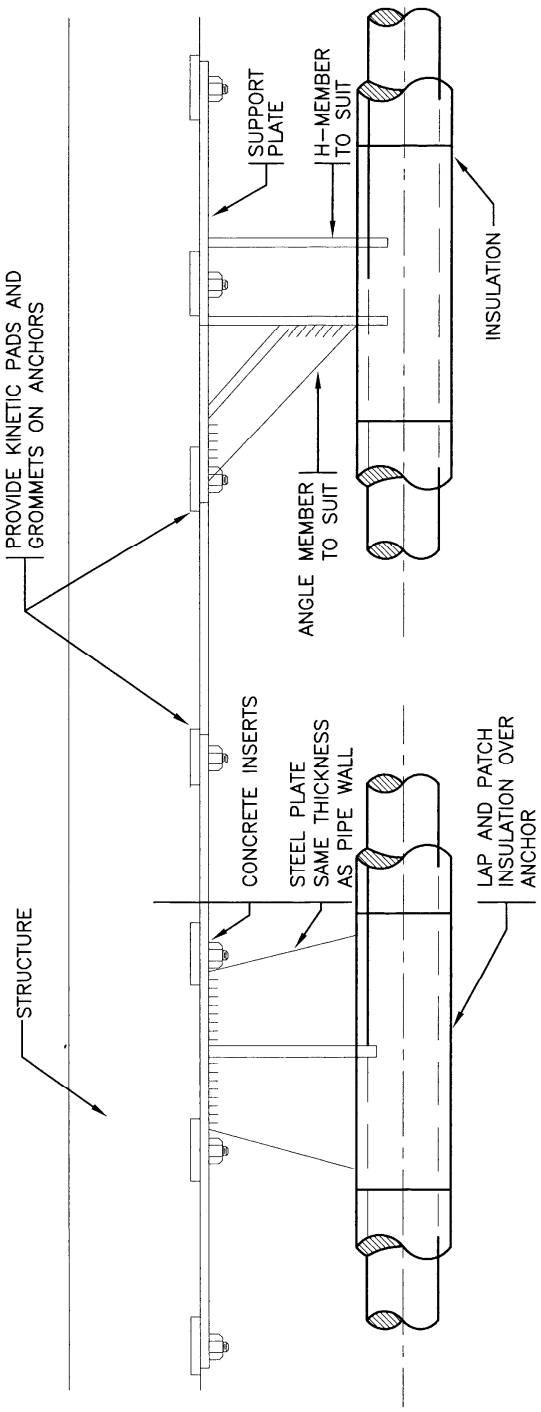

D04 15061 **STEEL PIPE ANCHOR DETAIL**
N.T.S.

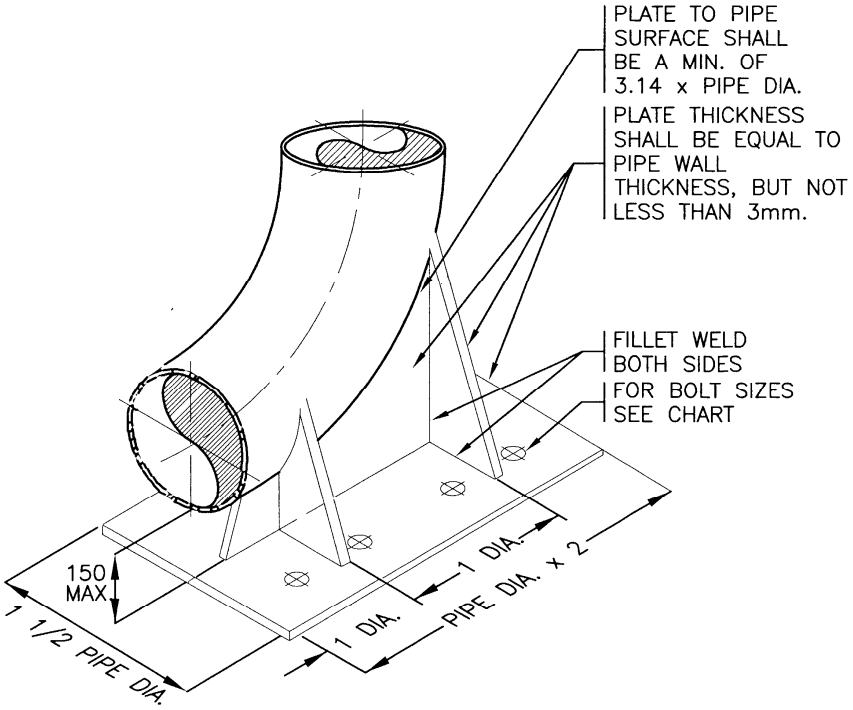

ANCHOR BOLTS				
PIPE DIA.	BOLT DIA.	BOLTS REQ.	BOLT LENGTH	CONCRETE STRENGTH
100	13	4	250	21 MPa
150	19	4	275	21 MPa
200	25	4	450	21 MPa
250	28	8	450	21 MPa
300	28	8	450	21 MPa

PIPE SUPPORT ARRANGEMENT AT 90 ELBOW

D05 / 15061 N.T.S.

1. General

1.1 RELATED REQUIREMENTS

.1	Mechanical General Requirements	Section 21 05 00
.2	Documentation	Section 23 01 00

1.2 RELATED WORK SPECIFIED IN OTHER SECTIONS

.1	Pipe and Equipment Supports	Section 23 05 29
.2	Indirect Fired Units	Section 23 73 39
.3	Fans	Section 23 34 00

1.3 PRODUCT OPTIONS AND SUBSTITUTIONS

.1 Refer to Division 1 for requirements pertaining to product options and substitutions.

1.4 SHOP DRAWINGS AND PRODUCT DATA

.1 Comply with requirements of Section 21 05 00 and 23 01 00.

.2 Provide schedule of vibration isolation devices prepared by the manufacturer to include:
- .1 Type of isolator
- .2 Service
- .3 Location
- .4 Static load
- .5 Deflection
- .6 Base dimensions

.3 Provide installation instructions.

1.5 INSPECTION

.1 Retain and pay for inspection services and report by manufacturer's representative to confirm installation is in accordance with manufacturer's recommendations. Refer to Section 23 01 00.

1.6 DETAIL DRAWINGS

.1 The following drawings are appended hereto and form a part of this section:

No.	*Name*
23 05 48 D01	Bases
23 05 48 D02	Base Support Detail
23 05 48 D03	Vibration Isolators
23 05 48 D04	Pipe Penetration Details
23 05 48 D05	Pipe Penetration Details through Floating Floor

2. Products

2.1 ACCEPTABLE MANUFACTURERS

.1 Vibron, Mason Industries, Vibro Acoustics, Korfund, Unison Industrial

2.2 BASES

.1 Refer to Detail 23 05 48 DO1.

.2 Type A: Integral structural steel fan and motor base with motor slide rail.

.3 Type B: Slung structural steel base with gussetted brackets and integral motor slide rail.

.4 Type C: Reinforced 20 MPa concrete inertia base with full depth perimeter structural channel frame with gussetted brackets and anchor bolts. Minimum mass of concrete 1.5 times mass of isolated equipment.

.5 Type D: Reinforced concrete equipment base with chamfered edges and Type 8 vibration isolator between base and housekeeping pad. Minimum mass of concrete at 1.5 times mass of isolated equipment.

2.3 VIBRATION ISOLATORS

.1 Refer to Detail 23 05 48 DO3.

.2 Type 1: Closed spring mount with top and bottom housing separated with neoprene or rubber stabilizers.

.3 Type 2: Open spring mount with springs having a horizontal stiffness equal or greater than vertical stiffness.

.4 Type 3: Open spring mount with springs having a horizontal stiffness equal or greater than vertical stiffness and have a heavy mounting frame with limit stop.

.5 Type 4: Closed spring mount with spring having a horizontal stiffness equal or greater than vertical stiffness and have limit stops.

.6 Type 5: Closed spring hanger with elastomer washer in series with the spring.

.7 Type 6: Closed spring hanger with 25 mm thick elastomer isolator in series with the spring.

.8 Type 7: Elastomer mount with threaded metal insert and hold down holes in base plate.

.9 Type 8: Rubber waffle pads, durometer natural rubber, minimum 12 mm thick, maximum loading 415 kPa.

.10 Type 9: Neoprene-steel-neoprene pad, with 12 mm thick rubber waffle pads bonded to .6 mm steel plate.

2.4 KINETIC ISOLATION PADS

.1 50 mm thick solid neoprene isolators.

.2 Maximum deflection of pad not to exceed 7 mm.

3. Execution

3.1 BASE ASSEMBLIES

.1 Refer to Detail 23 05 48 DO1, 23 05 48 DO2.

.2 Provide bases for equipment as specified in Vibration Control Schedule.

.3 Provide concrete housekeeping pad below pad. Anchor vibration isolators to the housekeeping base.

.4 Provide minimum 50 mm clearance between housekeeping pad and base.

.5 Attach horizontal control springs Type HCS to base of centrifugal fans to limit excessive deflections caused by starting torque. Refer to drawing 23 05 48 DO1.

.6 Ensure bases and housekeeping pads are level and clear of all debris.

.7 Support vertical piping to equipment from the base, not on the housekeeping pad or floor.

3.2 VIBRATION ISOLATORS

.1 Select springs to operate at static deflections not greater than 2/3 solid deflection.

.2 Provide Type 8 isolators below all steel spring mounts.

.3 Colour code springs. Do not re-paint.

.4 Isolate all bolts used to secure isolators with rubber washers.

.5 Hot dip galvanize housings and neoprene coat springs where isolators are exposed to outdoors.

.6 Where deflection exceeds 5 mm use steel spring isolators. Where deflections are less than 5 mm, use neoprene isolators.

.7 Do not bend or offset spring hanger rods. Rods not to exceed 10° offset from vertical. Ensure springs do not deflect and touch surrounding steel body.

.8 Substitute neoprene for natural rubber on Types 8, 9 isolators on outdoor installations or where oil may contact the isolator.

3.3 SPRING ISOLATED PIPING SUPPORTS

.1 Where piping connects to vibration isolated devices, provide Type 5, 6 isolators on pipe hanger supports as follows:
- .1 First three pipe hangers for pipe 100 mm or less.
- .2 First four pipe hangers for pipe greater than 100 mm but less than 250 mm.
- .3 First six pipe hangers for pipe 250 mm and larger.
- .4 Size first spring hanger to deflect two times the static deflection of the isolated equipment, with maximum deflection of 50 mm. Minimum 25 mm deflection of subsequent hangers.

.2 Provide spring isolators on all piping supports in the following rooms:

3.4 SOUND AND VIBRATION PENETRATIONS

.1 Refer to Drawing 23 05 48-DO4.

.2 Support piping passing through equipment room floors with a pipe clamp at floor level, supported from floor on Type 8 isolators.

.3 Caulk pipe and ducts passing through equipment room floors or walls on each side. Install lead sheeting around the opening to form a sound barrier.

3.5 FLOATING FLOOR INSTALLATION

.1 Refer to Drawing 23 05 48 DO5.

.2 Construct floor assembly to accept base and isolators mounting as detailed on drawing 23 05 48-DO5. Install kinetic isolation pads on 600 mm grid.

3.6 RUBBER ISOLATED PIPING SUPPORTS

.1 Where domestic hot and cold piping to plumbing fixtures is supported in drywall partitions, install 3 mm thick neoprene rubber separation between bracket support and pipe. Refer to Section 23 05 29 and Section 22 42 02.

3.7 VIBRATION CONTROL SCHEDULE

.1 Refer to Schedule.

END OF SECTION

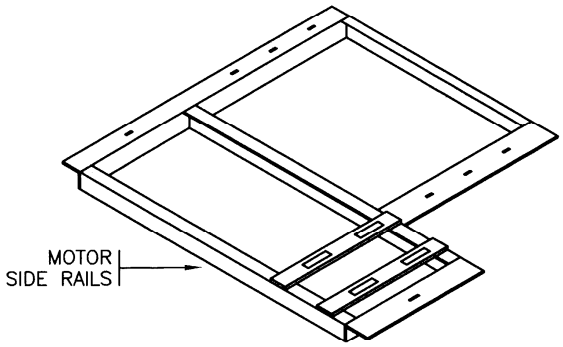

TYPE A INTEGRAL STEEL BASE
ALL WELDED CONSTRUCTION

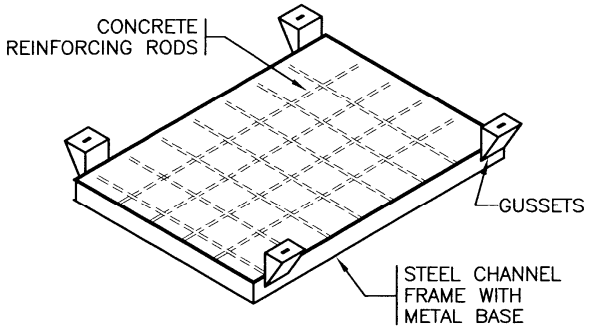

TYPE C CONCRETE INERTIA BASE
ALL WELDED CONSTRUCTION

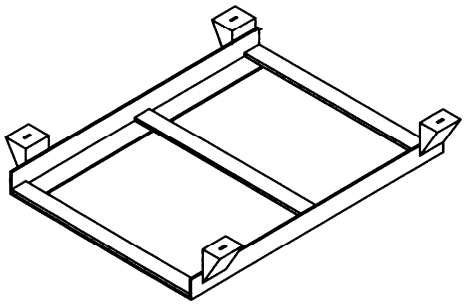

TYPE B SLUNG STEEL BASE
ALL WELDED CONSTRUCTION

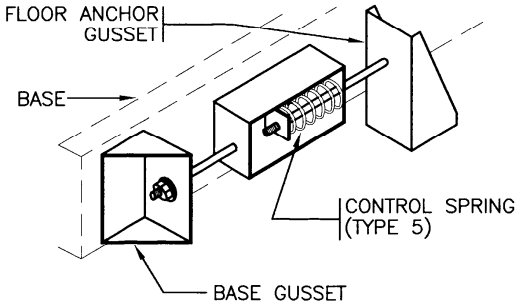

TYPE HCS TYPICAL HORIZONTAL
CONTROL SPRING

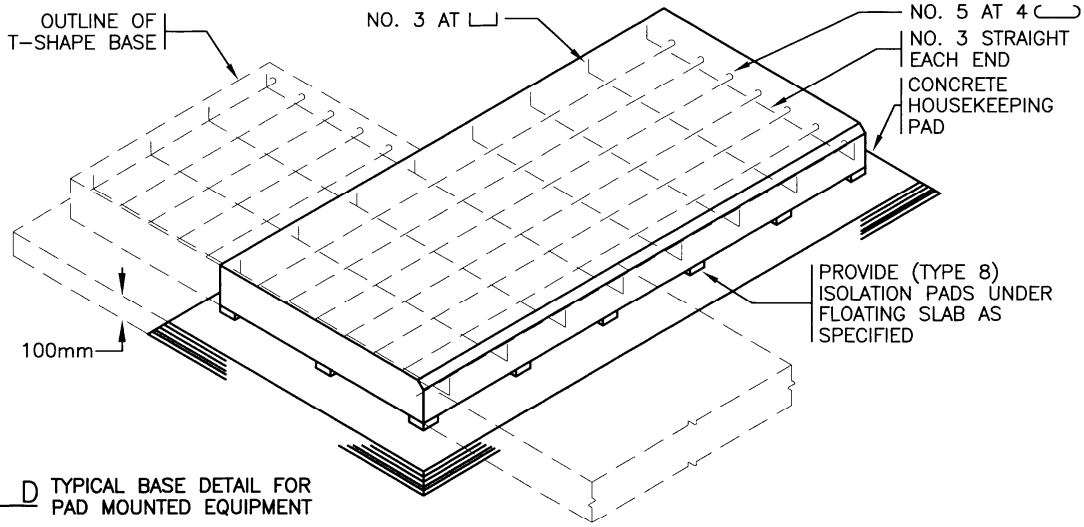

TYPE D TYPICAL BASE DETAIL FOR
PAD MOUNTED EQUIPMENT

D01 / 15205 **BASES**
N.T.S.

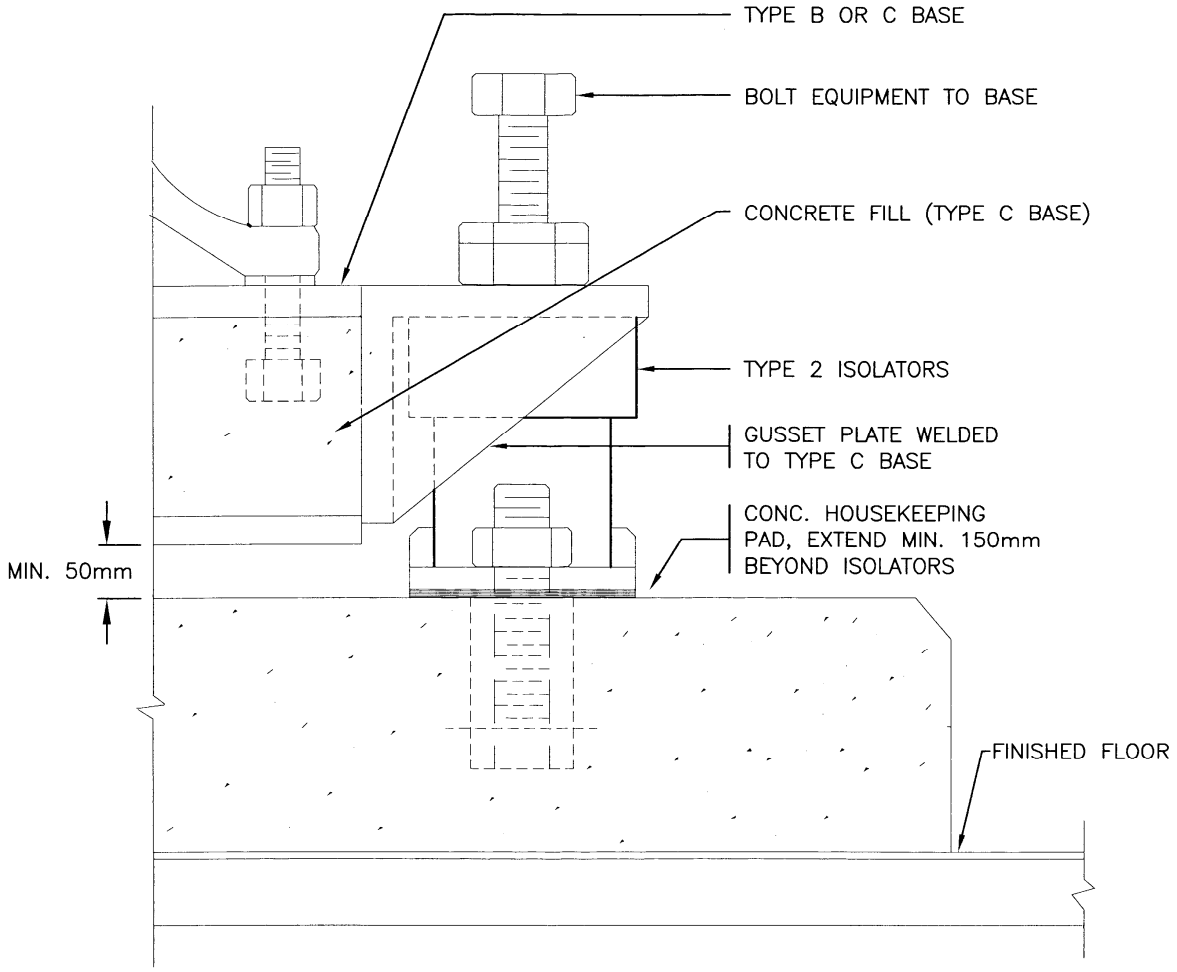

D02 / 15205 **BASE SUPPORT DETAILS**
N.T.S.

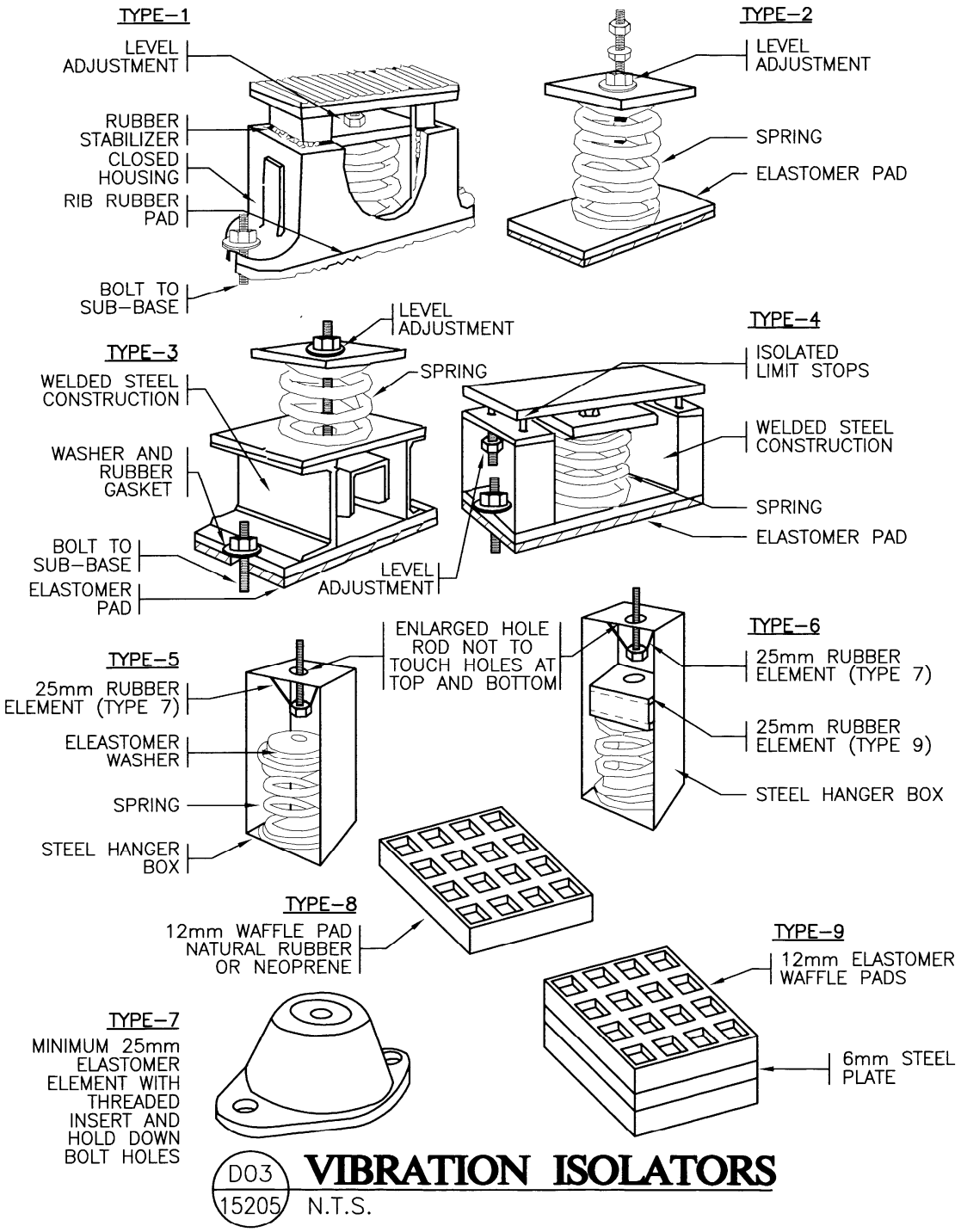
TYPE–1
LEVEL ADJUSTMENT
RUBBER STABILIZER
CLOSED HOUSING
RIB RUBBER PAD
BOLT TO SUB–BASE
TYPE–2
LEVEL ADJUSTMENT
SPRING
ELASTOMER PAD
TYPE–3
LEVEL ADJUSTMENT
SPRING
WELDED STEEL CONSTRUCTION
WASHER AND RUBBER GASKET
BOLT TO SUB–BASE
ELASTOMER PAD
LEVEL ADJUSTMENT
TYPE–4
ISOLATED LIMIT STOPS
WELDED STEEL CONSTRUCTION
SPRING
ELASTOMER PAD
TYPE–5
25mm RUBBER ELEMENT (TYPE 7)
ELEASTOMER WASHER
SPRING
STEEL HANGER BOX
ENLARGED HOLE ROD NOT TO TOUCH HOLES AT TOP AND BOTTOM
TYPE–6
25mm RUBBER ELEMENT (TYPE 7)
25mm RUBBER ELEMENT (TYPE 9)
STEEL HANGER BOX
TYPE–8
12mm WAFFLE PAD NATURAL RUBBER OR NEOPRENE
TYPE–9
12mm ELASTOMER WAFFLE PADS
6mm STEEL PLATE
TYPE–7
MINIMUM 25mm ELASTOMER ELEMENT WITH THREADED INSERT AND HOLD DOWN BOLT HOLES
D03
15205
VIBRATION ISOLATORS
N.T.S.

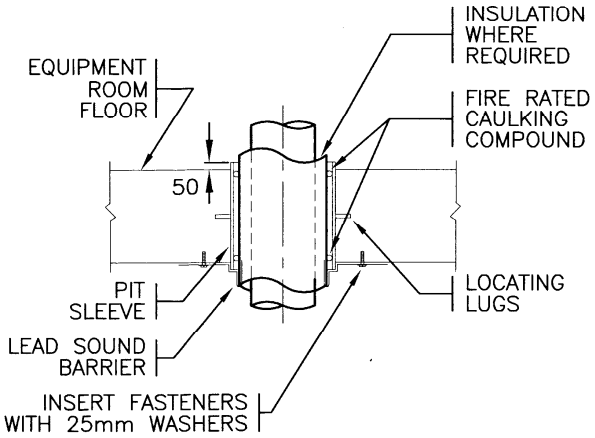

PIPE PASSING THROUGH

EQUIPMENT ROOMS
N.T.S.

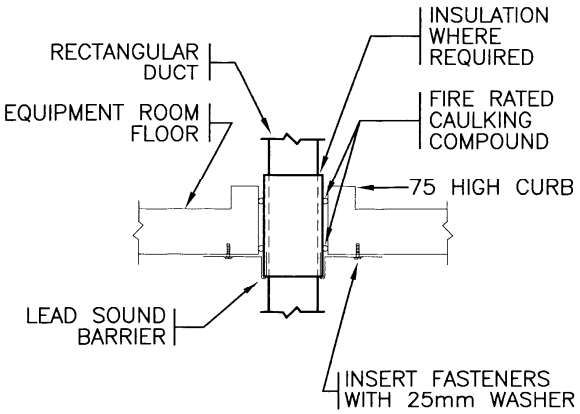

DUCT PASSING THROUGH

EQUIPMENT ROOMS
N.T.S.

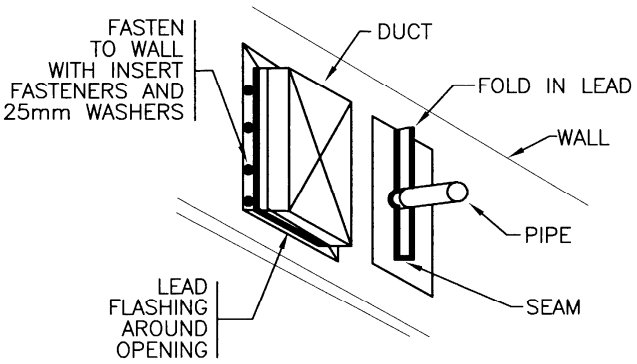

LEAD SOUND FLASHING
N.T.S.

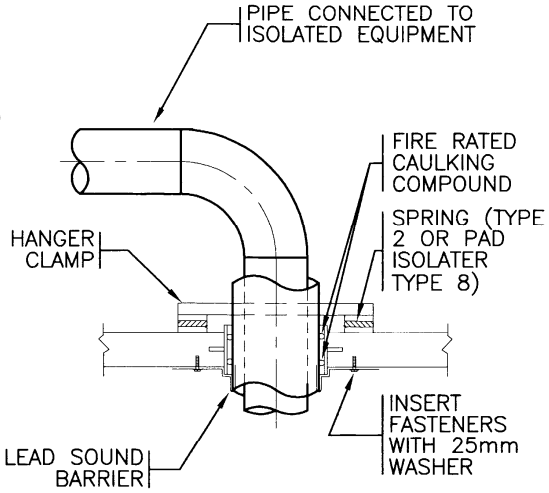

D04
15205

PIPE RISER WITH

VIBRATION ISOLATION
N.T.S.

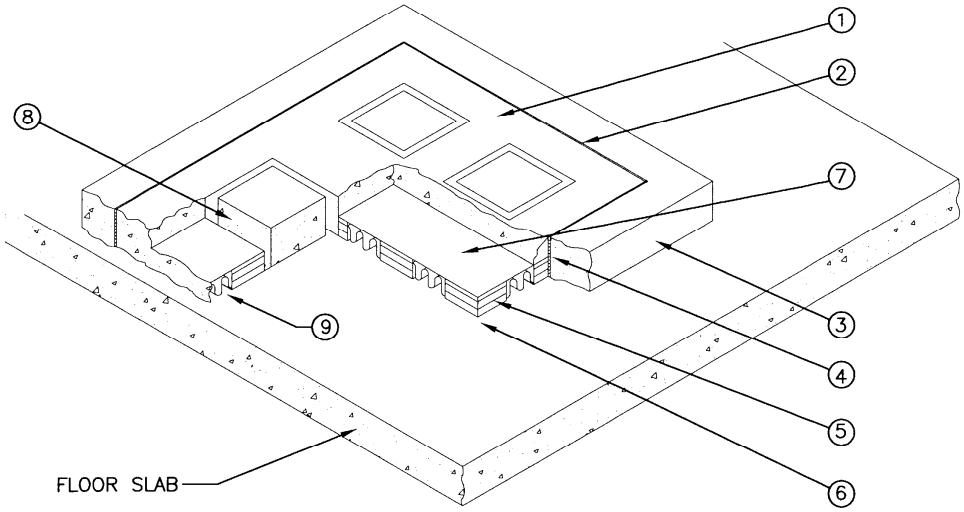

CUT–AWAY VIEW OF FLOATING CONCRETE FLOOR

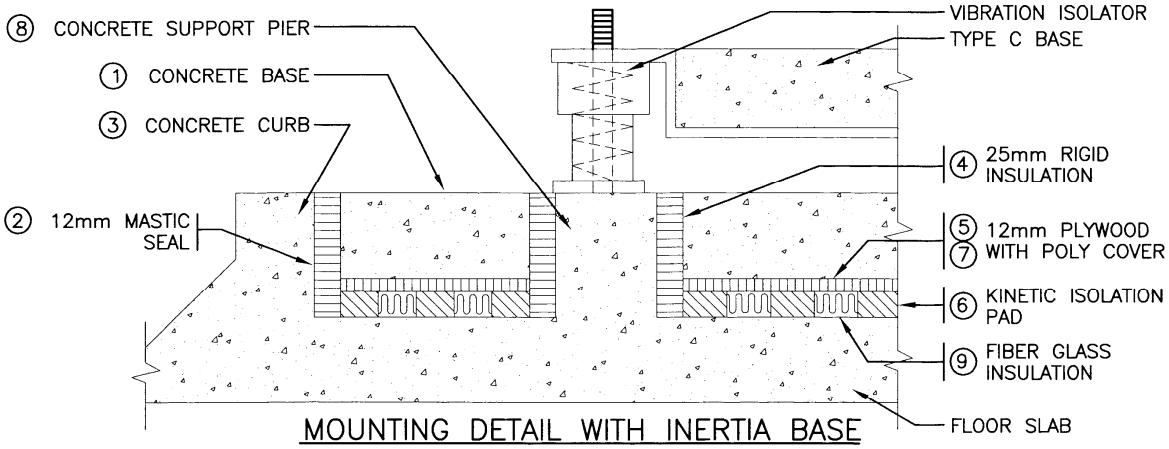

MOUNTING DETAIL WITH INERTIA BASE

LEGEND
1.– CONCRETE REINFORCED WITH IRON MESH
2.– TYPICAL MASTIC SEAL (12mm ALL AROUND)
3.– CONCRETE CURB 75mm
4.– 25mm RIGID FIBRE GLASS INSULATION
5.– 12mm PLYWOOD (TREATED) WITH R–CLIPS AT JOINT OR 16mm T&G
6.– KINETIC ISOLATION PAD (600mm GRID)
7.– LAYER OF POLYETHYLENE ON TOP OF TREATED PLYWOOD AND OVER INSIDE FACE OF SIDE ISOLATION MOUNT
8.– TYPICAL ISOLATOR REINFORCED CONCRETE SUPPORTING PIER
9.– FIBROUS GLASS INSULATION BETWEEN ISOLATORS

D05 / 15205 **FLOATING CONCRETE FLOOR DETAIL**
N.T.S.

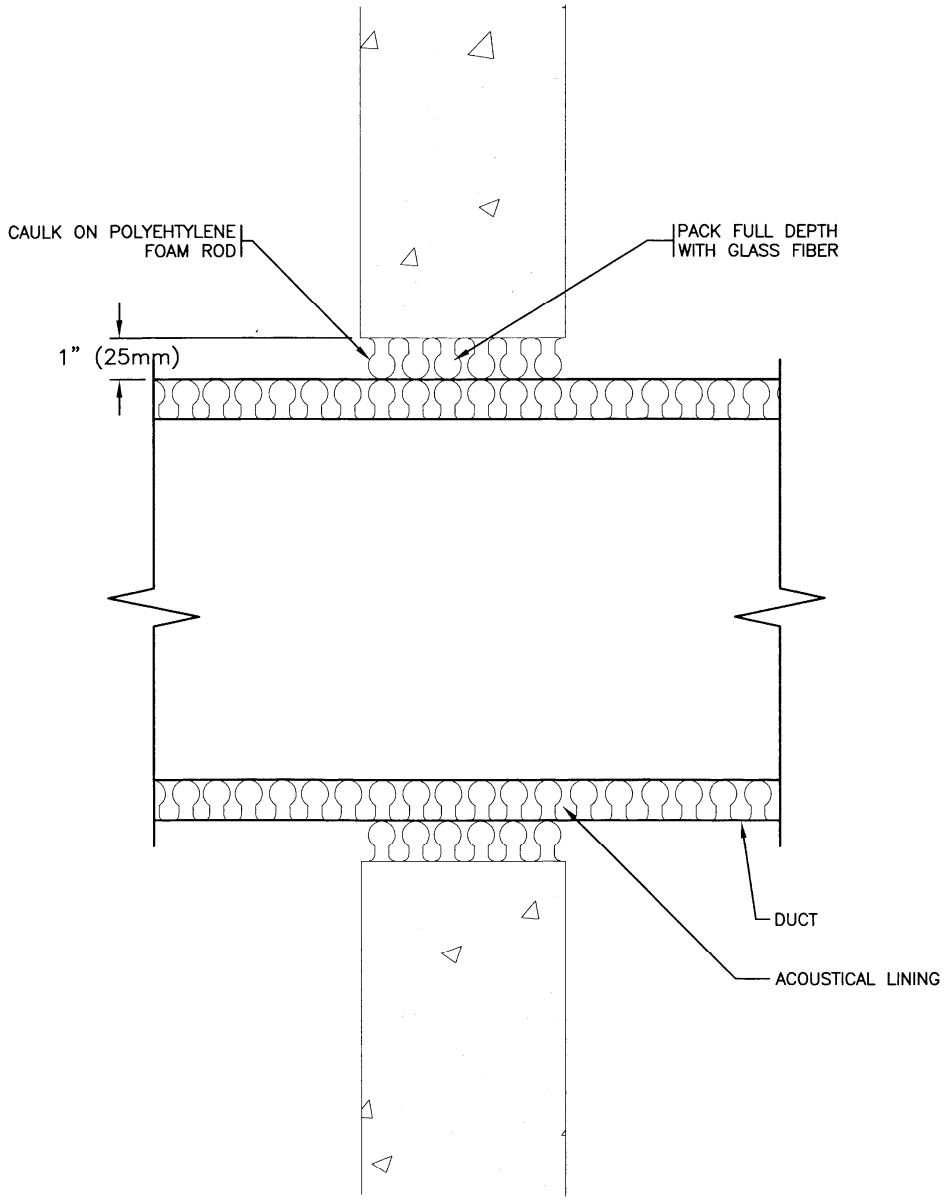

DUCT PENETRATION THROUGH SINGLE SOUND ISOLATING WALL (CONC. WALL)

D10
15205
N.T.S.

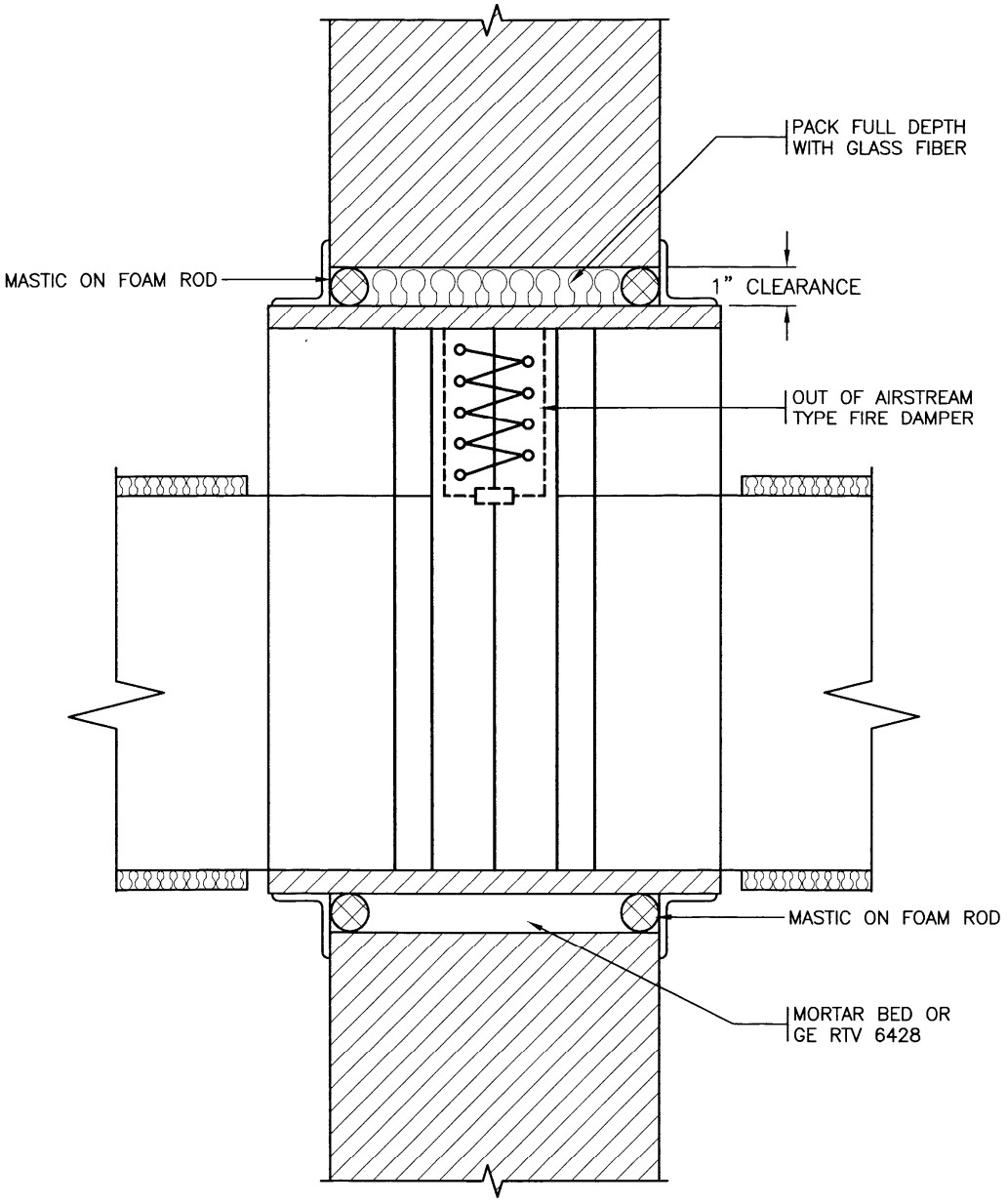

D12
15205

FIRE DAMPER - SINGLE ISOLATING VALVE

N.T.S.

1. General

1.1 COORDINATION

.1 Coordinate colour coding of piping and equipment with Section 09940.

1.2 QUALITY ASSURANCE

.1 Provide labels to CSA and ANSI Standards.

2. Products

2.1 PIPE, VALVE AND EQUIPMENT MARKERS

.1 Identification Plates: black laminated plastic with 12 mm engraved white lettering.

.2 Pipe and Duct Labels: labels with 20 mm high black lettering on yellow background with direction of flow arrows to OSHA Standards. Fasten labels with mechanical fastener in addition to adhesive backing on labels.

.3 Valve Tags:

.1 40 mm diameter brass tags with 12 mm high lettering affixed to valve with brass jack chain.

2.2 VALVE DIRECTORY

.1 Provide typewritten list of **[all valves]** identifying the following information:
.1 Valve number
.2 Location
.3 Service
.4 Make/model/size
.5 With/without handwheel
.6 Type of control.

.2 Relate valve number to a schematic presentation of the systems.

2.3 LOCATION TACKS

.1 Colour coded tacks to identify concealed mechanical equipment, coded as follows:
.1 Yellow - HVAC equipment
.2 Red - Fire dampers/smoke dampers
.3 Green - Plumbing valves
.4 Blue - Heating/cooling valves

3. Execution

3.1 NAMEPLATES

.1 Provide name/data plates on major equipment components with manufacturer's name, model number, serial number, capacity and electrical data. Attach plate in a conspicuous place.

3.2 DUCT AND PIPE LABELS

.1 Apply pipe and duct labels with a sufficient coat of contact cement to ensure permanent adhesion and seal with two coats of clear lacquer and secure with mechanical fastener.

.2 Apply pipe and duct labels at 15 m intervals, before and after pipes pass through walls, at access door openings.

3.3 IDENTIFICATION PLATES

.1 Tag automatic controls, instruments and relays with identification plates and key to control schematic on which instruments are numbered in sequence.

.2 Identify electric starting switches, electric disconnects and remote pushbuttons with identification plates.

.3 Identify thermostats relating to terminal boxes and/or valve numbers.

.4 Identify air terminal boxes and radiator valves with numbers.

.5 Label all mechanical equipment with laminated plastic labels (self-adhesive). Do not fasten labels to removable components.

3.4 VALVE DIRECTORY

.1 Provide valve directory framed under plexiglass with metal frame and mount on wall in **[building operator's office]**.

3.5 LOCATION TACKS

.1 Locate tacks in the corner of the T-bar grid closest to equipment.

END OF SECTION

1. General

1.1 INTENT

.1 Balance air and water system terminals to provide flow rates within ±10% of those specified when equipment is operating at design conditions.

.2 Adjust and balance major equipment components to provide flow rates within 5% of those specified when equipment is operating at design conditions.

.3 Make adjustments to air terminals, fan speeds, pump impellers as instructed by the Consultant to suit field operating conditions which may differ from the design parameters listed.

.4 Prepare report in accordance with procedures, format and information required.

.5 Comply with requirements of Section 21 05 00 and 23 01 00.

1.2 QUALITY ASSURANCE

.1 Each balancing sub-trade intending to provide a bid for this work shall submit the following information not less than seven (7) days prior to the close of sub-trade tenders. Any firm that does not comply will not be accepted by the Consultant:

- List previous projects of similar scope with dates that projects were executed.
- Outline depth of firm, including principals, years of operation, address, phone number.
- List instruments owned by firm and procedure that will be used on this project.
- List name of job site supervisor that will execute this work and a resume of this specific work experience.
- Provide a sample of a balance report on a project of similar scope.

.2 An independent agent will be hired at the Owner's expense to spot check the accuracy of the balancing of air and water systems. The balancing sub-trade will be required to adjust systems and re-balance as necessary until design flows are met and verified by the independent agent. The balancing work will not be accepted until accuracy is proven.

.3 Provide a performance bond made out to the Mechanical Contractor in the amount of 50% of the balancing contract.

1.3 SUBMITTALS

.1 Submit name of proposed balancing firm for approval within **[seven]** days of contract award.

.2 Include qualifications of the balancing firm including the name and qualification of the individual certifying reports. Failure to submit name of balancing firm within the required time period shall be cause for the Consultant to select a firm to carry out the work at no change in contract price.

.3 Within fourteen (14) days of being requested, balancing schedules and agenda shall be submitted for approval. Balancing work shall not commence until approved.

1.4 PROCEDURES AND REPORTING FORMAT

.1 General: Procedures and reporting format shall be in accordance with current edition of AABC or NEBB.

.2 Descriptive Data: Review design concepts and general function of each system including associated equipment and operation cycles. Confirm listing of flow and terminal measurements to be performed; selection points for proposed sound measurements.

.3 Procedure Data: Prior to commencement of balancing work, outline procedures for taking test measurements to establish compliance with requirements. Specify type of instrument to be used, method of instrument application and correction factors.

.4 Sample Forms: Submit forms showing application of procedures to typical systems and components. Forms to be of AABC or NEBB format.

.5 Submit a draft copy of the final reports to the Consultant for review and for independent agent to confirm accuracy. Incorporate any revisions prior to submission of final report.

.6 Submit three (3) copies of final reports.

1.5 COOPERATION

.1 The balancing firm shall check and report defects or deficiencies that may affect balancing during the mid to later stages of systems installation.

.2 Mechanical trade, sheet metal trade and control sub-trade shall co-operate with the balancing firm to:

.1 Provide sufficient time before final completion date so that balancing can be accomplished.

.2 Provide immediate labour and tools to make corrections without delay.

.3 Place heating, ventilating and air conditioning systems and equipment into full operation and continue the operation for each working day of testing and balancing.

.4 Advise testing and balancing firm of changes made to the system during construction.

.5 Make necessary revisions to controls, dampers, fan and pump drives and consult with equipment manufacturers as required to achieve the specified systems performance.

.6 Supply and install all dampers and access doors as shown and where required to obtain final system balance.

.7 Provide ladders, scaffolds, tools and labour to assist the work of the balancing firm, including removing/replacing ceiling tiles, guards, adjusting pulleys and belts.

.8 Control manufacturer shall work with the balancing firm when setting damper linkages and minimum outside air dampers. The control manufacture shall be available for re-adjusting of dampers or controls that are not properly calibrated.

.9 Set pressure regulating and reducing valves to operating and code conditions.

.10 Check and set relief and safety valves to code requirements.

.11 Clean strainers. Provide clean air filters immediately prior to air balancing.

.12 Open fire dampers.

.13 Variable pitch pulley supplied on 15 kW motors and larger shall be changed to fixed pulleys after the air balance is completed. Provide such pulleys.

1.6 TURNOVER SEMINAR

.1 Attend turnover seminar. Allow four hours for attendance and presentation.

.2 Present scope of balancing work and procedures that were carried out in executing the work.

.3 Present balance reports and outline information that is included in the report.

.4 Define maintenance procedures and checks that can be carried out to ensure systems stay in proper balance. Identify the balancing devices and their operation.

2. Products

2.1 INSTRUMENTS

.1 Instruments: For testing and balancing of air and hydronic systems; all instruments shall have been calibrated within a period of six months and verified for accuracy prior to start of work.

.2 Submit a list of equipment which will be used for the balancing of systems and the accuracy of test certification.

.3 Measuring devices specified within Division 21 work such as air flow stations, water control devices and meters may be used providing the manufacturer submits documentation proving suitable calibration.

3. Execution

3.1 GENERAL PROCEDURE

.1 Permanently mark settings on valves, splitters, dampers and other adjustment devices.

.2 Take measurements to verify balance has not been disrupted or that such disruption has been rectified.

.3 At the completion during balancing procedures, allow for a minimum of two days for the Consultant to witness test procedures and conduct tests.

.4 When building is occupied prior to completion of balancing work, continue execution of such work outside of occupied hours.

3.2 SITE VISITS

.1 Schedule a total of **4** site visits to correspond with site meetings held by the Contractor. After each site visit submit a written report to the Contractor and Consultant. Site visits shall commence after the start of air distribution work and be spread over the construction period to the start of the balancing work.

.2 A review of the installation shall be made at the scheduled visit and any additional dampers or valves required for proper balance shall be reviewed with the Consultant and the Contractors.

.3 Allow for **2** visits to the site to adjust systems for seasonal changes during warranty.

3.3 ACCEPTANCE

.1 Mechanical systems shall not be considered ready for final inspection until balancing results acceptable to the Consultant are obtained.

.2 If it is found that the specified air flows cannot be achieved on portions of the system, the actual conditions shall be reported to the Consultant for consideration of corrective action before continuing the balancing procedure.

.3 If measured flow at final inspection shows deviation of 10% or more or mean sound level deviation of 10 db or more from the certified report listings, by more than 10% of selected areas, the report shall be rejected.

.4 If report is rejected, systems shall be re-balanced and a new certified report submitted at no extra cost.

3.4 BALANCING REPORT

.1 Provide reports in soft cover 3-ring binder manuals, complete with contents, page and indexing tabs and cover identification at front and side.

.2 Include types, serial number and dates of calibration of instruments.

.3 Record test data on a sepia made from the latest available revised set of mechanical drawings and submit **2** copies upon completion of the balancing contract.

.4 Install at each piece of mechanical equipment a "Data Register" showing significant operating temperatures, pressures, amperes, voltage, brake horsepower. "Data Register" to be enclosed in a laminated plastic securely attached to the equipment or to a wall in the adjacent area.

.5 Submit with report, fan and pump curves with operating conditions plotted. Submit grille and diffuser shop drawings and diffusion factors.

.6 Report shall be indexed as follows:

Air
Summary
Procedure
Instrumentation
Drawings

Equipment Summary
Fan Sheets
Fan Curves
Fan Profile Data
Static Data
Air Monitoring Station Data
Traverse Data and Schedule
Terminal Unit Summary
Outlet Data Summary and Schematics (per system)
Building Pressurization Data
Diagnostic

Water
Summary
Procedure
Instrumentation
Drawings
Pump Data
Pump Curves
Flow Stations
Coils
Equipment Data
Element Data Summary and Schematics (per system)
Diagnostic

Sound
Summary
Procedure
Instrumentation
Drawings
Profile
Scale Readings

Fire Damper Verification
Summary
Procedure
Location on Drawings

3.5 AIR SYSTEM PROCEDURE

.1 Execute air systems balancing for each air system in accordance with AABC or NEBB specifications and as described herein.

.2 Make tests with supply, return and exhaust systems operating, and all doors, windows, closed in or in their normal operation condition.

.3 Test and adjust blower r/min to design requirements.

.4 Test and record motor full load amps.

.5 Make air quantity measurements in supply and return ducts at each balancing damper by pitot tube traverse of entire cross-sectional area of duct. Take minimum of 16 readings. Measure air volume by pitot traverse at discharge/inlet of each fan.

.6 Test and record required and measured system static pressures; filter differential, coil differential and fan total static pressure.

.7 Test and adjust systems for design recirculated air flow rates.

.8 Test and adjust system for design L/s outside air.

.9 Measure and record entering air temperatures.

.10 Measure and record leaving air temperature.

.11 Adjust all main supply and return ducts to proper design flow rates.

.12 Measure each terminal box and confirm minimum/maximum volumes are correct. Adjust where necessary.

.13 Inspect and confirm all fire dampers are open and have adequate access.

.14 Adjust zones to proper design, supply and return flow rates.

.15 Test and adjust each diffuser, grille and register to within 10% of design requirements.

.16 Identify location of each diffuser, grille and register, fire damper and balancing damper by schematic sketch and schedule of room number and name.

.17 Identify and list size, type and manufacturer of diffusers, grilles, registers and testing equipment. Use manufacturer's rating on equipment to make required calculations.

.18 In readings and tests of diffusers, grilles and registers, include required m/s velocity and test m/s velocity and required flow rate. Test after adjustment.

.19 Control manufacturer shall set adjustments of automatically operated dampers to operate as indicted in co-operation with balancing firm.

.20 Adjust diffusers, grilles and registers to minimize drafts and to prevent "short circuiting" between supply and return outlets.

.21 Use volume control devices to regulate air quantities only to extent that adjustments do not create objectionable air motion or sound levels. Effect volume control by duct internal devices such as dampers and splitters. Remove air slots on return air troffers to achieve adequate relief to ceiling space.

.22 Vary total system air flow rates by adjustment of fan speeds. Vary branch air quantities by damper regulation.

.23 Provide system schematic with required and actual air flow rates at each outlet or inlet.

.24 Record installed fan drive assemblies; fan sheaves, motor sheaves and belts.

.25 Record each installed motor manufacturer, voltage, rated amps, running amps and service factor.

.26 The final balanced condition of each area shall include testing and adjusting of pressure conditions. Test and record building pressurization levels in variable volume systems throughout full range of fan delivery rates, under both heating and cooling conditions of multi-storey building test pressure conditions at ground, intermediate and upper levels. Front doors, exits, elevator shafts should be checked for air flow so that exterior conditions do not cause excessive or abnormal pressure conditions. Document abnormal building leakage conditions noted.

.27 Complete balancing to achieve positive building pressure unless otherwise instructed. A positive pressure relative to outside of 10 Pa minimum and 20 Pa maximum shall be achieved, measured with negligible outside wind velocity.

.28 Install required test holes complete with removable and replaceable plugs.

3.6 BALANCING DATA

.1 Balance and equipment data shall be listed in SI metric units.

.2 Air Handling Equipment Installation Data:

Manufacturer and model
Size
Arrangement, discharge and class
Motor type, kW, r/min, voltage, phase, cycles and full load
Amps
Location and local identification.

.3 Air Handling Equipment Design Data:

Total air flow rate
Static pressure
Motor kW, r/min and amps
Outside air flow rate
Fan r/min
Fan kW
Inlet and outlet, dry bulb temperatures.

.4 Air Handling Equipment Recorded Data:

Air flow rate
Static pressure
Fan r/min
Motor operating amps
Inlet and outlet dry bulb temperatures.

.5 Duct Air Quantities - Mains, Branches, Outside Air and Exhausts (Maximum and Minimum):

Duct sizes
Number of pressure readings
Sum of velocity
Average velocity
Duct recorded air flow rate
Duct design air flow rate.

.6 Air Inlets and Outlets:

Outlet identification location and designation
Manufacturer's catalogue identification and type
Application factors
Design and recorded velocities
Design and recorded air flow rates
Deflector vane or diffuser cone settings.

.7 Building Pressurization Data:

Outside air temperatures
Outside wind velocity
Building pressures plotted with respect to systems
Supply air, return air and exhaust air flow rates
Locations of pressure measuring points, inside and outside building.

.8 Pump Installation Data:

Manufacturer and model
Size
Drive type
Motor type, kW, r/min, voltage, phase, cycles and full load motor amps.

.9 Pump Design Data:

Water flow rate
Pressure
r/min
kW.

.10 Pump Recorded Data:

Discharge and suction pressures (full flow and no flow)
Operating pressure and total dynamic head
Operating water flow rate (from pump curves if metering not provided)
Motor operating amps.

.11 Domestic Recirc Pump Installation Data:

Manufacturer and model
Size
Drive type
Motor type, kW, r/min, voltage, phase, cycles and full load motor amps.

.12 Domestic Recirc Pump Design Data:

Water flow rate
Pressure
r/min
kW.

.13 Domestic Recirc Pump Recorded Data:

Discharge and suction pressures (full flow and no flow)
Operating pressure and total dynamic head
Operating water flow rate (from pump curves if metering not provided)
Motor operating amps.

.14 Expansion Tank Installation Data:

Manufacturer, size, capacity
Pressure reducing valve setting
Pressure relief valve setting.

.15 Heating Equipment Design Data:

Heat transfer rate
Water flow rate
Entering and leaving water temperature
Water pressure drop.

.16 Heating Equipment Recorded Data:

Element type and identification (location and designation)
Entering and leaving water temperatures
Water pressure drop.
Water flow rate.

.17 Heat Exchanger Installation Data:

Manufacturer, model, type
Water flow rates (tube and shell)
Inlet and outlet temperatures (tube and shell)

.18 Heat Exchanger Recorded Data:

Heated media flow rate
Heating media flow rate
System entering and leaving temperatures and pressures
Steam pressure and temperature and condensate temperatures
Entering and leaving heating water temperatures and pressures.

.19 Air Heating and Cooling Equipment Design Data:

Heat transfer rate
Water and air flow rates
Water pressure drop across coil
Air static pressure drop
Entering and leaving water temperatures
Entering and leaving air dry and wet bulb temperatures.

.20 Air Heating and Cooling Equipment Recorded Data:

Element type and identification (location and designation)
Entering and leaving air dry and wet bulb temperatures
Entering and leaving water temperatures
Water pressure drop across coil
Water pressure drop across bypass valve
Air static pressure drop
Air and water flow rates
Adjusted temperature rise or drop.

.21 Emergency Generator Ventilation

Generator manufacturer and model
Design air flow at 100% outside air
Measured air flow at 100% outside air
Air temperature of inlet louver

Air temperature at exhaust louver
Room air temperature.

.22 Water Chiller Installation Data:

Manufacturer and model
Motor type, kW, r/min, voltage, cycles, phase and full load amps
Water flow rates
Water pressure drops
Entering and leaving water temperatures.

.23 Water Chiller Recorded Data:

Water flow rates
Water pressure drops
Entering and leaving water temperatures.

.24 Sound Level Data:

Diagram or description of relationship of sound source to measuring instrument
Overall db (A) level
Reading at each octave band frequency from 31.5 Hz to 16 kHz
NC curves plotted and compared to those recommended by ASHRAE or AABC Publications.

END OF SECTION

1. General

1.1 RELATED SECTIONS

.1	Coils:	Section 23 82 16
.2	Ductwork:	Section 23 31 14
.3	Ductwork Accessories:	Section 23 33 00
.4	Single Duct or Dual Duct Air Terminal Units:	Section 23 36 10
.5	Air Filters:	Section 23 41 10

1.2 QUALITY ASSURANCE

.1 The Owner will hire an independent agency to review duct cleaning procedures prior to starting work and perform spot check review of work to determine that duct cleaning has been effectively executed.

1.3 SUBMITTALS

.1 Perform ductwork cleaning using a firm specializing in this type of work. Submit the following information prior to commencing work:

.1 List of at least five projects of similar size and scope completed by the firm.

.2 Name of the superintendent responsible for executing the work and his experience with projects of this scope.

.2 Submit an outline of the work scope for each air handling system with procedures, equipment, materials and schedule prior to commencing work.

.3 Submit Certificate of Completion for each air system that duct cleaning has been completed as defined in this specification.

1.4 DEFINITIONS

.1 Level 1 Clean: "White glove" clean, ductwork disinfected with bacterial count by swab analysis in the duct less than 30 colony forming units per 100 cm² (CFU's) after cleaning and disinfecting.

For operating theatres, sterilize interior of ductwork downstream of HEPA filters. Test bacterial count; re-sterilize until bacterial count shows less than 10 CFU's/100 cm².

.2 Level 2 Clean: No visible particulates or deposition after vacuum techniques have been completed.

.3 Air system: Includes central equipment; supply, return, exhaust fans, coils, dampers, turning vanes, grilles, diffusers, high, medium and low pressure ductwork (supply, return and exhaust) that is associated with an air handling system.

2. Products

2.1 MATERIALS

.1 Temporary Filters: 3 ply filter element with 35% ASHRAE 52-76 dust spot efficiency at 2.64 m/s face velocity to protect equipment during cleaning operation.

.2 Cleaning Agent:
- .1 Safeguard
- .2 Microban

3. Execution

3.1 ACCESS DOOR INSTALLATION

.1 Installation of access doors in ductwork is specified in the following sections:

.1	Section 23 82 16:	Coils
.2	Section 23 36 10:	Single Duct or Dual Duct Air Terminal Units
.3	Section 23 33 00:	Ductwork Accessories
.4	Section 23 41 10:	Air Filters

Supply and install additional access doors of the type specified in Section 08 31 19, that are required to complete duct cleaning operations specified in this section.

3.2 DUCT SYSTEM CLEANING

.1 Commence Level 2 Standard cleaning after completion of duct system installation and before air handling systems are started. Clean the following air systems to Level 2 Standard:

.2 Install filters as follows:
- .1 Behind all grilles and diffusers.
- .2 In front of all duct coils.
- .3 At inlet of all terminal high velocity units to protect pitot openings.

.3 When the duct systems are completed and before any fan systems are operated, clean all ductwork, plenums, coils and air handling equipment by compressed air and mechanical equipment or compressed air and high power suction equipment.

.4 Do not use mechanical brushes on acoustic lined ductwork.

.5 Remove all filters within five days after vacuum procedures is complete. Ensure the number of filters removed is equal to the number of filters installed.

.6 Seal all ductwork outlets and plenum openings with polyethylene sheet cover after ductwork has been cleaned.

.7 Repeat duct cleaning procedures on all sections found not satisfactory by independent test agency hired by the Owner.

.8 Submit Certificate of Completion for each air system that cleaning has been completed.

END OF SECTION

1. General

1.1 RELATED REQUIREMENTS

.1 Mechanical General Requirements — Section 21 05 00
.2 Duct Accessories — Section 23 33 00

1.2 PRODUCT OPTIONS AND SUBSTITUTIONS

.1 Refer to Division 1 for requirements pertaining to product options and substitutions.

1.3 SHOP DRAWINGS AND PRODUCT DATA

.1 Comply with requirements of Section 21 05 00 and 23 01 00.

.2 Submit shop drawings and installation instructions for the following information:
- .1 Pipe sleeve assemblies through rated floors and walls.
- .2 Rated caulking for pipe penetrating through fire rated floors and walls.
- .3 Rated fire stop device for PVC or CPVC plastic pipe.

2. Products

2.1 PIPE SLEEVE ASSEMBLY THROUGH FIRE RATED FLOORS & WALLS

.1 Up to 100 mm nominal pipe diameter: factory packaged sleeve assembly consisting of: 0.32 mm thick, 316 stainless steel outer sleeve extending 25 mm from each face of wall or floor with two pre-moulded elastomeric rings.

.2 150 mm and larger: 0.32 mm thick stainless steel outer metal flange with pre-moulded elastomeric lining to fit over the pipe on each side of the wall.

.3 Rating: labelled with 2 hour rating to CAN4 S115 and ASTM E814.

.4 Manufacturer: Fyre Sleeve (up to 100 mm diameter); Fyre Flange (150 mm diameter and larger); Hilti.

2.2 RATED CAULKING FOR PIPE PENETRATIONS THROUGH FIRE RATED FLOORS AND WALLS

.1 The fire stopping sealant shall not slump or sag and be thixotropic, intumescent and free of asbestos, halogens and volatile solvents.

.2 Fire stop materials shall be a one part component sealant applied with a conventional caulking gun or trowel and require no special tools.

.3 Fire stop materials shall be capable of maintaining an effective barrier against flames, heat and smoke in compliance with the requirements of ASTM E 814, UL 1479, ASTM E 119, UL 723, ASTM E 84, UL 263 and CAN4 5115 2 hour rating.

.4 Fire stop materials shall be paintable or capable of receiving finish materials in those areas which are exposed to view and which are schedule to receive finishes.

.5 Manufacturers: Metacaulk (Axford Agencies); Spec Seal (Ken Mar Electrical Sales Ltd.); Hilti; Flamesafe (Grace Construction Products).

2.3 RATED FIRE STOP DEVICE FOR PVC, CPVC PLASTIC PIPE

.1 Materials tested to CAN4-S115; tested at Warnock Hersey or Underwriters Laboratories; UL listed.

.2 Intumescent Collars suitable for use for PVC or CPVC pipe penetrating a 1 hr or 2 hr rated wall or floor.

.3 Approved manufacturer: 3M Fire Stop Devices; Spec Seal (Ken Mar Electrical Sales Ltd.), Hilti; Flamesafe (Grace Construction Products).

2.4 PIPE SLEEVES - POURED CONCRETE

.1 Material: cast iron or steel pipe, or plastic.

.2 Construction: annular fin at midpoint with intumescent seal within the assembly.

.3 Finish: painted with red zinc rich primer (ferrous materials).

2.5 PIPE AND DUCT SLEEVES - MASONRY CONSTRUCTION

.1 Material: Intumescent flexible block, tested in accordance with ULC S115, ASTM E814, UL1479.

2.6 DUCT SLEEVES - POURED CONCRETE

.1 Material: 1.2 mm thick galvanized steel.

.2 Construction: lock seam joint to form opening.

2.7 ESCUTCHEONS

.1 Material: chrome or nickel plated brass or 302 stainless steel.

.2 Construction: **[solid] or [split]** type with set screws for ceiling or wall mounting.

2.8 FLASHING

.1 Steel Flashing: minimum 0.6 mm galvanized steel.

.2 Aluminum Flashing: 25 kg/m² sheet lead for waterproofing, 5 kg/m² sheet lead for soundproofing.

.3 Safes: 25 kg/m² sheet lead or 200 micrometre neoprene.

.4 Caps: steel 0.8 mm thickness minimum, 1.6 mm thickness at fire resistance structures.

3. Execution

3.1 INSTALLATION

.1 General

.1 Provide and set sleeves in position on pipe and ducts passing through new masonry and poured concrete construction.

.2 Core drill openings for pipes in new masonry or poured concrete construction where sleeves have been omitted.

.3 Mark openings for pipe in existing masonry or poured concrete walls for core drilling.

.4 Size sleeves to allow minimum 6 mm clearance between pipe or duct and sleeve or between finished insulated surface and sleeve.

.5 Set sleeves through floors to extend 25 mm above finished floor. Floors on grade to be set flush with finished floor.

.6 Set sleeves through walls to be flush with finished surfaces.

.7 Ensure no contact between copper pipe and ferrous sleeves.

.2 Escutcheons

.1 Provide escutcheons on pipes passing through finished walls, partitions, floors and ceilings.

.2 Size escutcheons for inside diameter to fit around finished pipe or insulation and for outside diameter to completely cover opening on sleeve.

.3 Caps

.1 Install tight fitting metal caps on both sides where piping or duct has penetrated walls, ceilings or floors; install caps after void between pipe and sleeve has been filled.

.4 Counterflashing

.1 Counterflash where mechanical equipment passes through weather and waterproofed walls, floors and roofs. Refer to Section 07500.

.2 Provide curbs for mechanical roof installations minimum 200 mm high. Counterflash with steel; solder and make waterproof. Refer to Division 7.

.3 Provide lead flashing around ducts and pipes passing from equipment rooms, installed according to manufacturer's data for sound control. Refer to 23 05 48.

.5 Fire Rated Penetrations

.1 Install factory fabricated pipe sleeve assembly or caulk pipe penetrations with rated caulking on all pipes penetrating fire rated walls and floors. Install factory fabricated sleeves or rated caulking in strict accordance with manufacturers instructions, requirements, specifications, details, and shop drawings.

.2 Install rated fire stop device on all plastic pipe penetrations through rated walls or ceilings. Install in strict accordance with manufacturer's instructions, requirements, specifications, details and shop drawings.

.3 Install fire dampers on all ducts penetrating fire rated walls and floors. Refer to Section 23 33 00, Duct Accessories.

.4 Refer to architectural series of drawings to confirm rated walls, ceilings and floors.

END OF SECTION

1. General

1.1 RELATED REQUIREMENTS

.1 Mechanical General Requirements Section 21 05 00

1.2 PRODUCT OPTIONS AND SUBSTITUTIONS

.1 Refer to **Division 1** for requirements pertaining to product options and substitutions.

1.3 SHOP DRAWINGS

.1 Comply with requirements of Section 21 05 00.

.2 Submit an insulation schedule to define the scope of duct insulation and include the following information:
- .1 Material
- .2 "k" value
- .3 Thickness
- .4 Finish

1.4 DEFINITIONS

.1 For the purposes of this section, the following definitions apply:

- .1 "k" Value: thermal conductivity of insulating material per unit of thickness (W/m. °C).
- .2 Hot Duct: ductwork conveying air used for heating whose average temperature is greater than 38°C.
- .3 Cold Duct: ductwork conveying air used for air conditioning whose average temperature is less than 15°C.

1.5 FLAME/SMOKE DEVELOPMENT RATINGS

.1 Duct insulation, vapour barrier facings, tapes and adhesives shall have maximum flame spread ratings less than or equal to 25 and maximum smoke developed less than or equal to 50, when tested in accordance with CAN/ULC-S102, NFPA 255 or ASTM E84.

.2 Insulating materials and accessories must withstand service temperatures without smouldering, glowing, smoking or flaming when tested in accordance with ASTM C411.

2. Products

2.1 ACCEPTABLE MANUFACTURERS AND PRODUCTS

.1 Fiberglas, Manson, Owens Corning, Knauf, Certainteed Corp.

2.2 INSULATION MATERIALS

.1 Mineral Fibre Insulation for Hot and Cold Ducts:

.1 Material: flexible mineral fibre blanket insulation to CAN/CGSB-51.11 and CGSB 51-GP-52.
.2 "k" Value: maximum 0.038 W/m. °C at 24°C.
.3 Service Temperature - 40°C to 65°C.
.4 Jacket: factory applied reinforced aluminum foil vapour barrier to CGSB 51-GP-52M.

.2 Mineral Fibreboard Insulation for Acoustic Lined Ducts:

.1 Material: rigid mineral fibreboard to CAN/CGSB-51.10.
.2 "k" Value: maximum 0.035 W/m. °C at 24°C.
.3 Service Temperature: -40°C to 65°C.
.4 Surface Finish: coated to prevent fibre erosion on all exposed surfaces. Roughness not to exceed 0.58 mm.
.5 Acoustic Attenuation: Noise reduction coefficient (NRC) of 0.8 for 25 mm thickness using ASTM CA23 test method with F-25 mounting.

.3 Mineral Fibre Insulation for Breeching:

.1 Flexible mineral fibre blanket to CAN/CGSB-51.11.
.2 "k" Value: maximum 0.036 W/m. °C at 24°C.
.3 Service Temperature: 65°C to 450°C.

2.3 ACCESSORIES

.1 FSK Joint Tape: 100 mm wide with vapour barrier with laminated aluminum foil, glass fibre scrim and paper with pressure sensitive self adhesive.

.2 ASJ Tape: vapour resistant tape with all service jacket material and pressure sensitive self-adhesive.

.3 Contact Adhesive: quick setting, adhesive to adhere mineral fibre/fibreboard insulation to ducts.

.4 Lap Seal Adhesive: quick setting adhesive for joints and lap sealing of vapour barriers.

.5 Canvas Adhesive: washable adhesive for cementing canvas jacket to duct insulation.

.6 Pins: welding pins 4 mm diameter shaft with 35 mm diameter head for installation through the insulation. Length to suit thickness of insulation with 32 mm square nylon retaining clips.

2.4 RECOVERY MATERIALS

.1 Canvas: 220 g/m² plain weave cotton fabric with dilute fire retardant lagging adhesive, ULC listed.

.2 Aluminum Jacket: to CSA HA Series M-1980, 0.5 mm thick with aluminum alloy butt straps, secured with mechanical fastener.

3. Execution

3.1 GENERAL

.1 Dimensions shown on drawings are clear inside measurement regardless of insulation placement. Fabricate ducts accordingly.

.2 Apply insulation after required duct system tests have been completed and approved by the Consultant.

.3 Apply insulating materials only to duct surfaces that are clean and dry.

.4 Install insulation continuous on ductwork through walls and floors, except where required for fire separations.

.5 Install insulation continuous over full length of duct and fittings without penetration of hangers, standing duct seams and without interruption at sleeves.

.6 Locate longitudinal seams in the least visible location.

.7 Install insulation at ambient temperatures within acceptable ratings for tapes, sealants and adhesives.

.8 Recover exposed insulated duct work with **[aluminum] [canvas]**.

3.2 DUCT INSULATION SCHEDULE

.1 ***Insulate supply ductwork in its entirety*** on the following air systems with 25 mm thick insulation unless specified otherwise:

.2 ***Insulate all ductwork in the attic space*** (including supply, exhaust, return and relief) with 50 mm thick insulation.

.3 ***Unless otherwise noted on drawings, insulate the following ducts with acoustic lining:***

.1	Exhaust and relief plenums on all air systems:	25 mm thick
.2	Ducts within 3 m of exhaust discharge to outdoors:	25 mm thick
.3	Outside air intake ducts and/or plenums to all air systems:	50 mm thick
.4	Combustion air intake ducts:	50 mm thick
.5	Sound traps:	50 mm thick
.6	Ducts outside of the building:	50 mm thick
.7	Exposed low pressure cold supply return and exhaust ducts	
.8	Where shown on drawings:	25 mm thick

.4 Do not insulate the following ducts with insulation on exterior of ducts:
.1 Ducts with acoustic lining

.5 Where noted on the drawings, recover exposed insulated cold supply ducts in occupied spaces with aluminum jacket.

3.3 INSTALLATION

.1 Adhere flexible Mineral Fibre insulation to ductwork with contact adhesive applied in 150 mm wide strips on 400 mm centers. Band on outside until adhesive has set, then remove bands.

.2 Butt and seal joints with lap seal adhesive; cover joint with tape; use FSK tape for cold ducts.

.3 Acoustic Lining:

.1 Secure rigid Mineral Fibreboard Insulation for Acoustic Lined Ducts with 50% of area coverage using contact adhesive, impale on pins located 400 mm on centers, secure in place with retaining clips. Remove excess length of pins and cover with brush coat of lap seal adhesive.

.2 Bevel corners at joints and butt together. Brush coat all cut edges with lap seal adhesive. Install acoustic gauze over all cut corners and joints and brush coat with lap seal adhesive.

.3 Secure acoustic lining on medium and high velocity ductwork and ducts with galvanized perforated metal where air velocities exceed 10 m/s.

3.4 BREECHING AND CHIMNEY INSULATION

.1 Insulate the following breechings and chimney (including indoor and outdoor sections) with Mineral Fibre Insulation for Breeching:

.1 Indirect gas-fired air handling units (forced air burners) 50 mm thick

.2 Butt blankets firmly together and secure with 1.6 mm galvanized wire.

.3 Finish with aluminum jacket.

END OF SECTION

1. General

1.1 QUALITY ASSURANCE

.1 Test equipment and material where specified or required by authority having jurisdiction to demonstrate its proper and safe operation.

.2 Test procedures shall be in accordance with applicable portions of ASME, ASHRAE, SMACNA, NFPA, CSA and other recognized test codes as far as field conditions permit.

.3 Provide notice to the Consultant before tests.

1.2 SUBMITTALS

.1 Obtain certificates of approval and acceptance from authorities having jurisdiction and include same in Operating and Maintenance Manuals.

.2 On completion of mechanical installation, provide certification of tests with detailed data as required. Refer to Section 23 01 00. Itemize tests as to time performed and personnel responsible. Include copy of field data in Operating and Maintenance Manuals.

1.3 LIABILITY

.1 During tests, assume responsibility for damages in the event of injury to personnel, building or equipment and bear costs for liability, repairs and restoration.

2. Products - Not Applicable

3. Execution

3.1 PRESSURE TESTS

.1 Piping, fixtures or equipment shall not be concealed or covered until inspected and approved by the Consultant.

.2 Provide equipment, materials and labour for tests. Use test instruments from approved laboratory or manufacturer and furnish certificate showing degree of accuracy. Install permanent gauges and thermometers just prior to tests to avoid changes in calibration.

.3 Carry out hydraulic tests for 8 hours and maintain pressure. Where leakage occurs, repair and re-test.

.4 Natural Gas Piping: Test as required by authority having jurisdiction.

.5 Low Pressure Ducts: Test for tightness such that leakage is inaudible and not detectable by feel. Check for audible leaks at 500 Pa above duct design operating pressure.

.6 Medium and High Pressure Ductwork: Check for audible leaks. Test for tightness in accordance with SMACNA Manuals.

.7 Check systems during application of test pressure including visual check for leakage of water test medium, soap bubbler test for air or nitrogen test medium and halide torch for refrigerant medium.

.8 During heating and cooling piping system tests, check linear expansion at elbows, U-bends, expansion joints and offsets for proper clearance.

.9 When using water as test medium for system not using water or steam, evacuate and dehydrate the piping and certify the lines are dry. Use agency specializing in this type of work.

.10 Should tests indicate defective work or variance with specified requirements, make changes immediately to correct the defects. Correct leaks by re-making joints in screwed fittings, cutting out and re-welding welded joints, re-making joints in copper lines. Do not caulk.

3.2 PERFORMANCE TESTS

.1 Conduct performance tests to demonstrate equipment and systems meet specified requirements after mechanical installations are completed and pressure tested. Conduct tests as soon as conditions permit. Make changes, repairs and adjustments required as tests may indicate prior to operating tests.

.2 Gas fired appliances rated in excess of 117 kW shall be subjected to an operational test established by the Gas Protection Branch and shall pass this test before being approved for operation.

.3 Make operating tests for minimum of 10 days during heating season and cooling season of first year of operation and at times when directed, for proper setting of controls under peak load conditions.

.4 Conduct final operating tests in presence of the Owner. Vary loads to illustrate start-up and shutdown sequence and simulate emergency conditions for safety shutdowns, with automatic and manual reset. Make final adjustments to suit exact building conditions.

.5 Provide services of one job mechanic, ladders, tools and associated equipment required to assist the Owner in final tests.

.6 Lubricate bearings, adjust and/or replace and set direct and "V"-belt drives for proper alignment and tension.

.7 Calibrate and adjust thermostats, thermometers, gauges, linkage and dampers. Control valves shall operate freely.

.8 Operate and test motors and speed switches for correct wiring and sequences. Check overload heaters in motor starters.

.9 Fasten loose and rattling pieces of equipment to ensure quiet operation.

END OF SECTION

1. General

1.1 RELATED REQUIREMENTS

.1	Bidding Requirements and General Conditions of Contract	Division 01
.2	Mechanical General Requirements	Section 21 05 00

1.2 ALTERNATIVES

.1 Size round ducts installed in place of rectangular ducts indicated from ASHRAE table of equivalent rectangular and round ducts. No variation of duct configuration of sizes permitted except by written permission.

1.3 RELATED WORK SPECIFIED IN OTHER SECTIONS

.1	Ductwork Insulation	Section 23 07 13
.2	Access doors in Walls/Ceilings	Section 08 31 19
.3	Ductwork Cleaning	Section 23 05 94
.4	Ductwork Accessories:	Section 23 33 00

1.4 DEFINITIONS

.1 Low Pressure: Static pressure in duct less than 0.5 kPa and velocities less than 10 m/s.

.2 Medium Pressure: Static pressure in duct less than 1.5 kPa and velocities greater than 10 m/s.

.3 High Pressure: Static pressure over 1.5 kPa and less than 2.5 kPa and velocities greater than 10 m/s.

.4 Duct Sizes: Inside clear dimensions. For acoustically lined or internally insulated ducts, maintain sizes inside ducts.

.5 Exposed Ducts: Ducts that are not concealed in ceiling plenums, shafts or furrings are considered exposed.

1.5 SUBMITTALS

.1 Submit shop drawings and samples of duct fittings for approval, including particulars such as thicknesses, welds and configurations prior to start of work.

2. Products

2.1 MATERIALS

.1 Galvanized Steel Ducts: Galvanized steel, lock forming quality, with galvanized coating to ASTM A525 G90 designations on both sides.

.2 Stainless Steel Ducts: Type 316 stainless steel, to ASTM 480M. Finish exposed ductwork to a No. 4 finish.

.3 Carbon Steel Ducts: not less than 1.37 mm thick carbon steel material.

.4 Fasteners: Use rivets and bolts throughout; sheet metal screws accepted on low pressure ducts.

.5 Sealant: Water resistant, fire resistive, compatible with mating materials.

.6 Flexible Ducts: Corrugated aluminum or fabric supported by helically wound steel wire or flat steel strips.

2.2 FABRICATION

.1 Complete metal duct conduits unique with no single partition between ducts. Where width of duct exceeds 450 mm cross break for rigidity. Open corners are not acceptable.

.2 Lap metal ducts in direction of air flow. Hammer down edges and slips to leave smooth duct interior. Alternately, jointing systems for round and rectangular ducts as manufactured by “Ductmate” (or equal) may be used, subject to conformance with the manufacturer’s recommended installation procedures. Jointing is acceptable on systems up to 2500 Pa.

.3 Construct tees, bends, and elbows with radius of not less than 1 ½ times width of duct on centre line. Where not possible and where rectangular elbows used, provide approved type air foil turning vanes. Where acoustical lining is provided, provide turning vanes of perforated metal type with fibreglass inside.

.4 Increase duct sizes gradually, not exceeding 15 degree divergence wherever possible. Maximum divergence upstream of equipment to be 30 degree and 45 degree convergence downstream.

.5 Rigidly construct metal ducts with joints mechanically tight, substantially airtight, braced and reinforced with stiffeners so as not to breathe, rattle, vibrate or sag. Caulk duct joints and connections with sealant as ducts are being assembled.

.6 Construct stainless steel and carbon steel ductwork assemblies using metal thickness one gauge heavier than that listed for galvanized steel duct construction. Weld joints and seams to seal liquid tight to AWS D9-84. Preserve corrosion resistance in the weld and adjacent area. Protect metal surfaces from contamination during fabrication process. Ensure surfaces and joints are free from foreign metal particles and dirt. Grind and polish welds to ensure a smooth finish on exterior and interior.

3. Execution

3.1 INSTALLATION

.1 Fabricate and install ductwork in accordance with SMACNA Duct Manuals, ASHRAE and Alberta Building Code requirements and the requirements specified in this section.

.2 Provide openings in ductwork where required to accommodate thermometers and controllers. Provide pitot tube openings where required for testing of systems, complete with metal can with spring device or screw to ensure against air leakage. Where openings are provided in insulated ductwork, install a metal ring inside insulation material.

.3 Locate ducts with sufficient space around equipment to allow normal operating and maintenance activities.

.4 Connect diffusers or troffer boots to low pressure ducts with 1.5 m maximum length of flexible duct. Hold in place with caulking compound and strap or clamp.

3.2 LOW PRESSURE DUCT THICKNESSES (MINIMUM)

.1 Rectangular Ducts

Maximum Width	mm
Up to 300 mm	0.6
330 mm to 760 mm	0.8
790 mm to 1370 mm	0.8
1400 mm to 2130 mm	1.0
2160 mm and Over	1.2

.2 Round Ducts

Duct Diameter	mm
Up to 330 mm	0.6
350 mm to 550 mm	0.8
580 mm to 1270 mm	0.8
890 mm to 910 mm	1.0
1300 mm to 1520 mm	1.2
1550 mm to 2130 mm	1.6

3.3 OVAL DUCTWORK (FACTORY MADE WITH SPIRAL LOCK SEAMS)

.1

Maximum Width	mm	Centers	Reinforcement
Up to 500 mm	0.8	none	
280 to 500 mm	0.8	1220 mm	L50 x 50 x 3 mm
530 to 1020 mm	1.2	760 mm	L50 x 50 x 5 mm
1040 to 1830 mm	1.6	600 mm	L75 x 75 x 5 mm

END OF SECTION

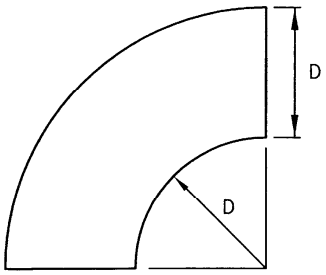

LONG RADIUS 90° ELBOW

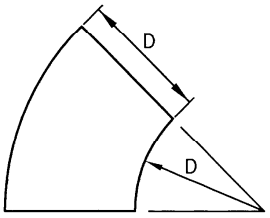

LONG RADIUS 45° ELBOW

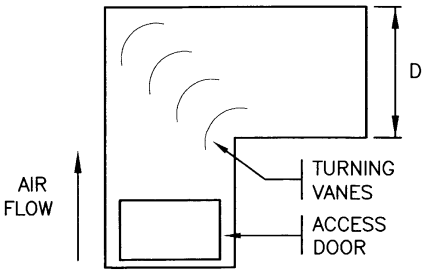

SQUARE TURN 90° ELBOW

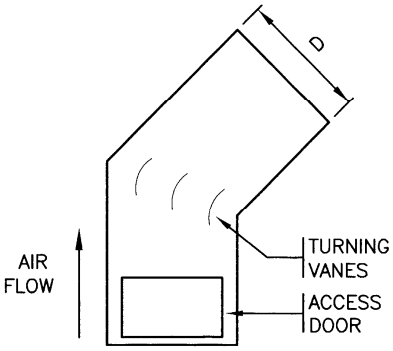

SQUARE TURN 45° ELBOW

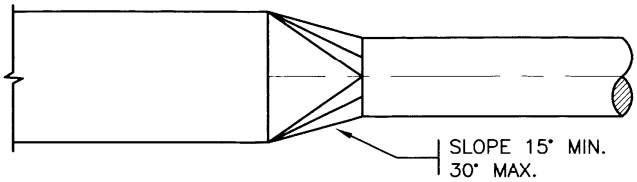

TYPICAL ROUND TO SQUARE TRANSITION

RECTANGULAR DUCT FITTINGS FOR SYSTEM PRESSURE 250 PA & LESS

D01
15840

N.T.S.

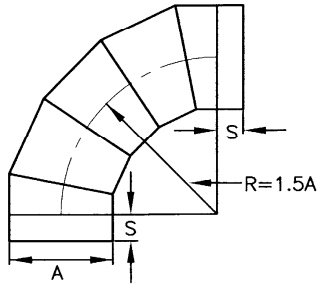

90° LATERAL

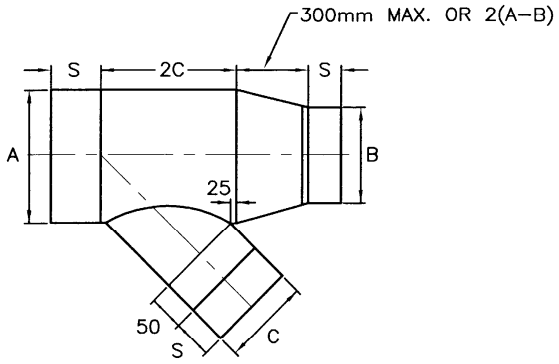

REDUCING LATERAL

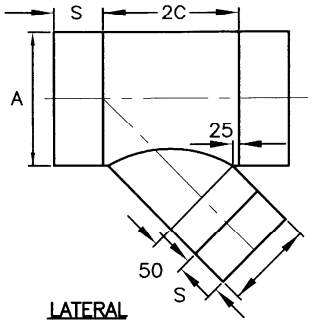

LATERAL

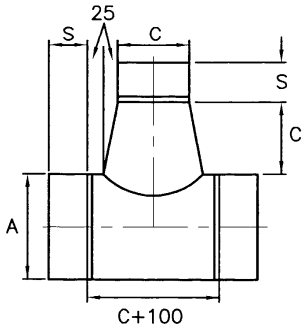

CONICAL TEE

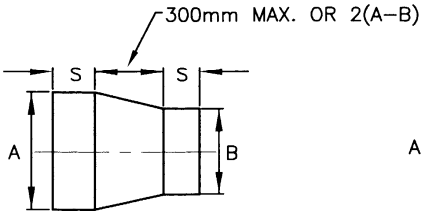

CONCENTRIC

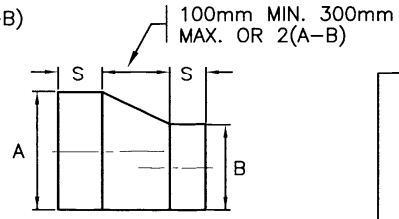

ECCENTRIC

REDUCERS

NOTES:

1. PROVIDE BALANCING DAMPER ON ALL TAKE–OFFS TO AIR SUPPLY OUTLETS
2. S=50mm

ROUND DUCT FITTINGS FOR SYSTEM PRESSURE 250 PA & LESS

D02
15840

N.T.S.

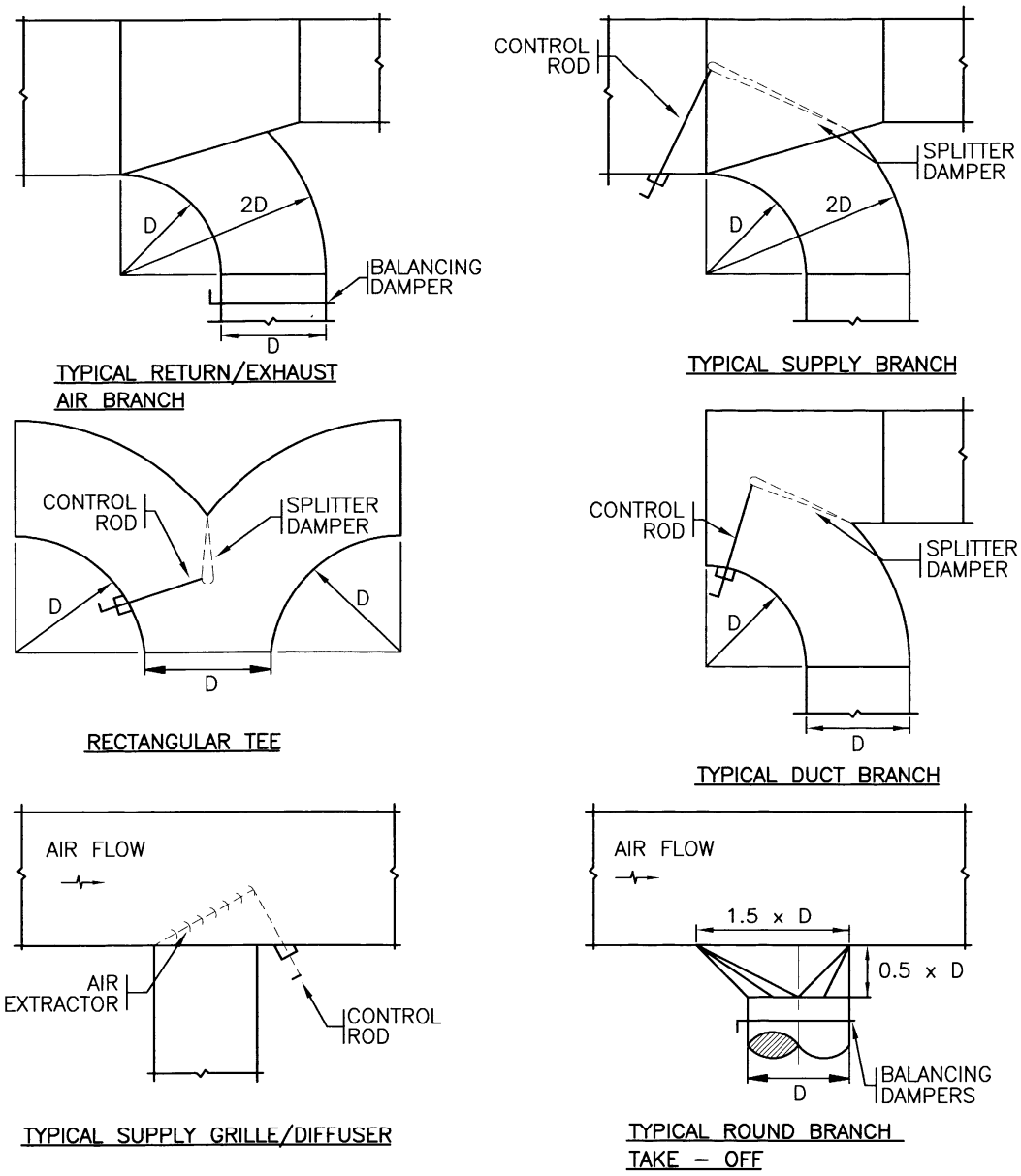

DUCT TAKE-OFF FITTINGS FOR SYSTEM PRESSURE 250 PA & LESS

D03
15840

N.T.S.

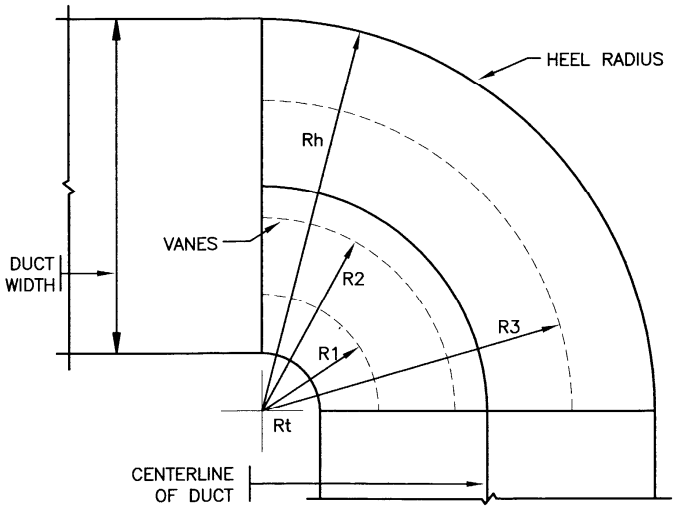

NOTES:

1. WHEN NO THROAT RADIUS IS SHOWN, ASSUME Rt= 0.1 Rh. LOCATE VANES ACCORDINGLY.
2. USE 2 VANES FOR DUCT WIDTH UP TO 500mm
3. USE 3 VANES FOR DUCT WIDTH 500mm AND LARGER.

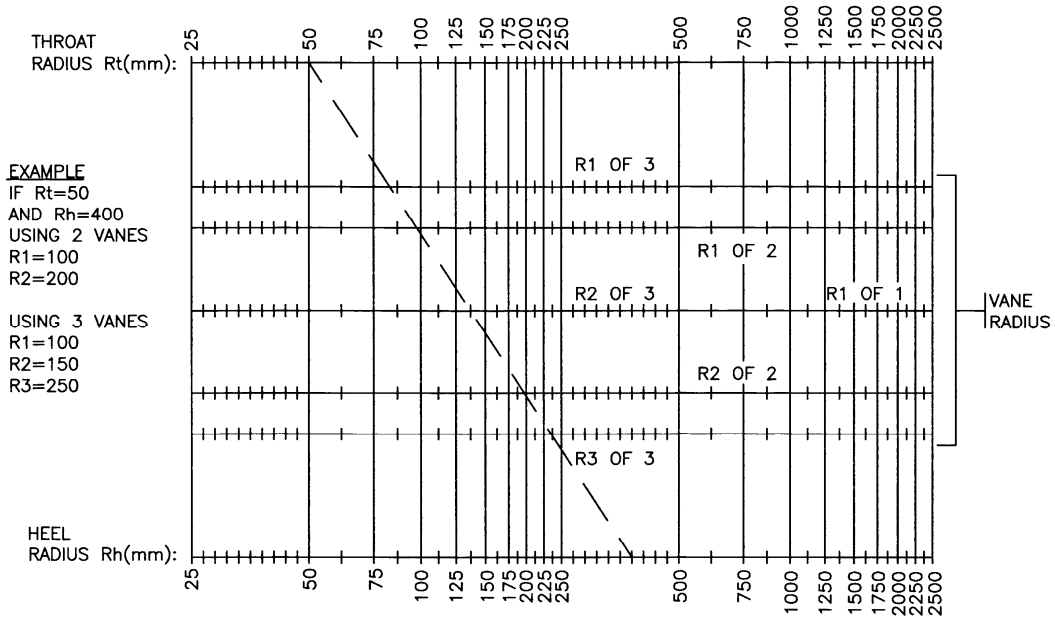

VANE LOCATIONS FOR SHORT RADIUS ELBOW ON LOW PRESSURE RECTANGULAR DUCTWORK

D04
15840

N.T.S.

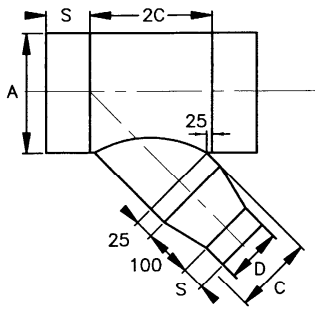

CONICAL LATERAL

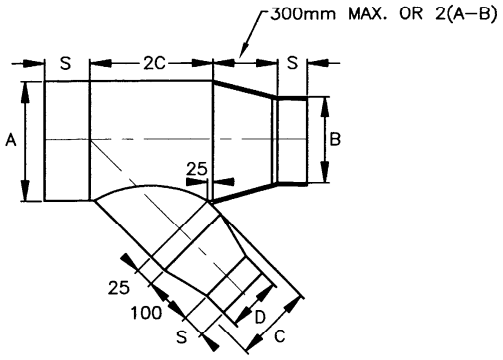

CONICAL LATERAL REDUCING

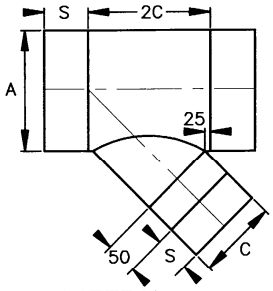

LATERAL

NOTE:

1. S=50mm

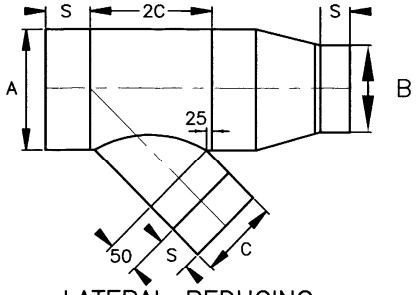

LATERAL REDUCING

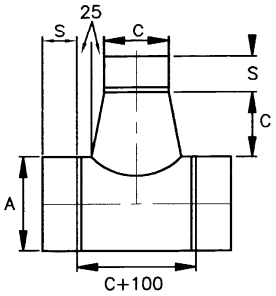

CONICAL TEE

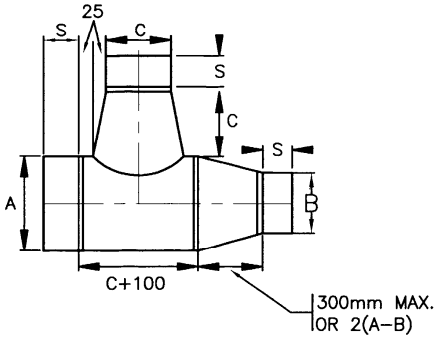

CONICAL TEE REDUCING

ROUND DUCT FITTINGS FOR SYSTEM PRESSURES GREATER THAN 250 PA

D05
15840

N.T.S.

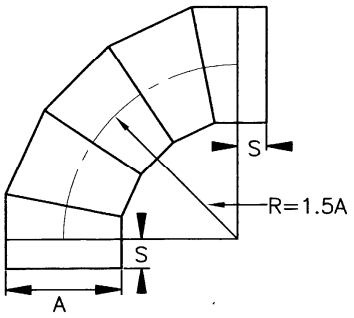

SEGMENTAL 90° ELBOW

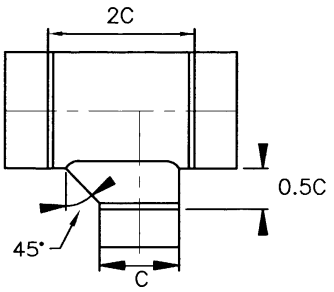

COMBINATION TEE

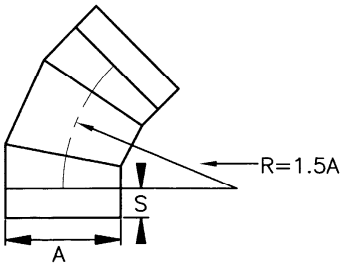

SEGMENTAL 45° ELBOW

NOTE:

1. S=50mm

ROUND DUCT FITTINGS FOR SYSTEM PRESSURES GREATER THAN 250 PA

D06
15840

N.T.S.

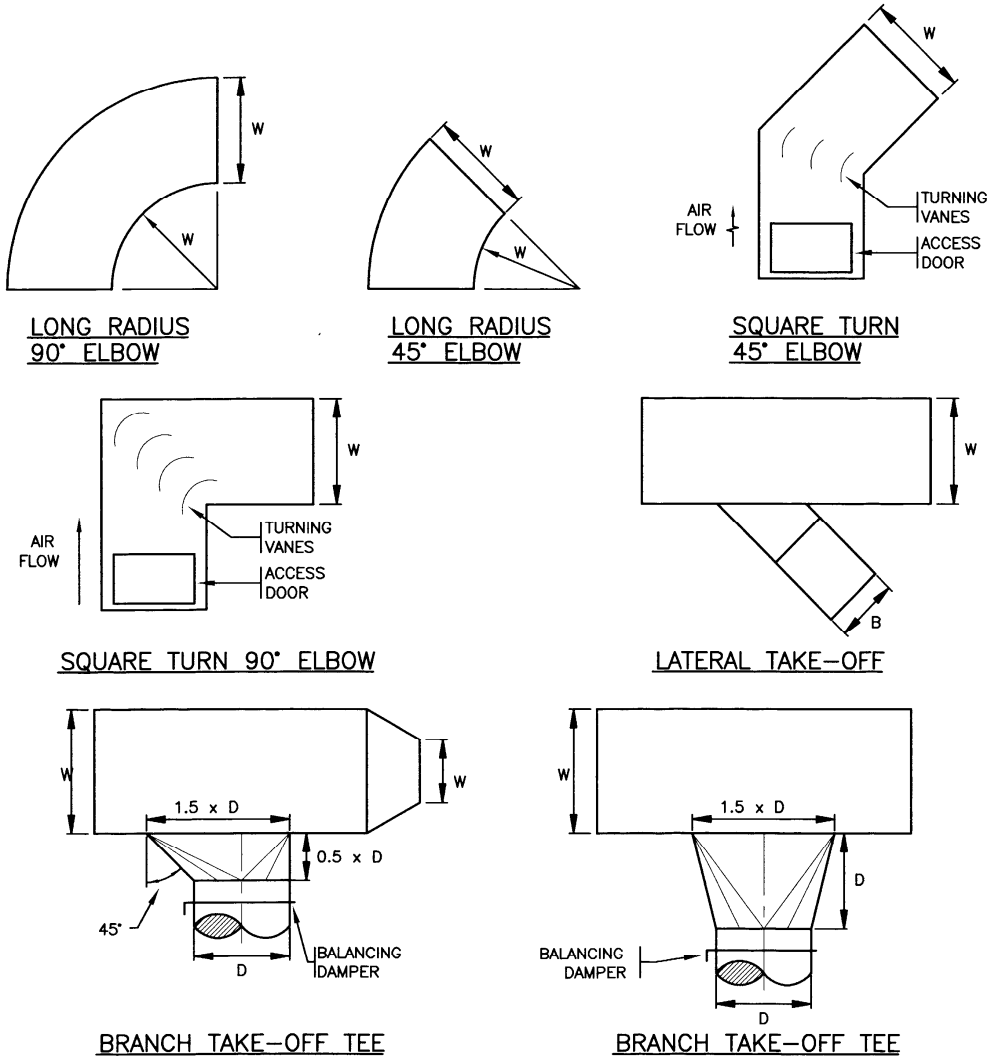

NOTE:

USE THIS TEE ONLY FOR BRANCH TAKE-OFF TO TERMINAL CONNECTION

RECTANGULAR DUCT FITTINGS FOR SYSTEM PRESSURES GREATER THAN 250 PA

D07
15840

N.T.S.

1. General

1.1 PRODUCT OPTIONS AND SUBSTITUTIONS

.1 Refer to Division 1 for requirements pertaining to product options and substitutions.

1.2 SHEET METAL THICKNESS

.1 Sheet metal thickness in this section is stated in "preferred metric units".

1.3 SHOP DRAWINGS AND SUBMITTALS

.1 Comply with requirements of Section 21 05 00.

1.4 STANDARDS

.1 Accessories to NFPA 90A, Air Conditioning and Ventilation Systems.

.2 Fabrication to SMACNA Duct Manuals.

2. Products

2.1 ACCEPTABLE MANUFACTURERS AND PRODUCTS

.1 Access Doors: Acudor, Air-O-Metal, Lehage, Miami Carey, Milcor, Titus, Controlled Air, Ductmate

.2 Fire Dampers: Controlled Air, Nailor-Hart, Ruskin

.3 Smoke Dampers: Controlled Air, Nailor-Hart, Ruskin

.4 Combination Smoke/Fire Dampers: Controlled Air Model FSD-A-81

2.2 FLEX CONNECTORS TO EQUIPMENT

.1 Flexible connector fabricated from neoprene coated glass fabric, factory fabricated, minimum density 1.22 kg/m², tightly crimped into metal edging strip.

.2 Fire retardant flexible connector fabricated from fire retardant, airtight fibreglass reinforced heavy cloth as listed by ULC S109.

.3 Fastening: attach to ducting and equipment by screws or bolts at 150 mm intervals and seal with high velocity duct sealer.

2.3 DUCT ACCESS DOORS

.1 Equipment Access Doors: construct access doors of galvanized steel, rigid and close fitting with sheet metal frame. Insulate with glass fibre insulation to same thickness as duct insulation and finish inside surface with sheet metal to form a sandwich type assembly. Hold door in frame with a minimum of two sash locks. Insulate door only on insulated duct systems.

.2 Plenum Access Doors: construct plenum access doors to same assembly defined in Article 2.3.1. Provide two hinges and two compression latches with inside and outside handles. Where plenum access doors are larger than 600 mm x 1200 mm, provide three hinges and three compression latches with inside and outside handles.

.3 Rated Access Doors: rate access doors to the same rating as the fire rated assembly in which the door is installed. Provide ULC labelled doors.

2.4 TURNING VANES

.1 Standard Construction: full radius arc, single blade vanes; refer to Detail D07-23 33 00.

.2 Acoustic Vanes: small arc airfoil vanes with fibrous glass packing, perforated 0.8 mm thick galvanized steel on inner arc.

2.5 FIRE DAMPERS

.1 Construction: galvanized or prime coated mild steel, ULC rated for 1-1/2 hour when tested in accordance with CAN4 S112-M82, adjustable linkage, with sleeves and breakaway duct connections.

.2 Fusible Link: rated at 74°C to ULC S505.

.3 Actuation: weighted to close and lock in closed position when released.

.4 Framing: 40 mm x 30 mm x 3 mm angle iron on full perimeter of frame on both sides of membrane being pierced.

2.6 BALANCING DAMPERS

.1 Splitter Dampers: airfoil shape, one gauge heavier than duct with control rod and locking device on exterior of duct.

.2 Single Blade Butterfly Dampers: thickness to SMACNA Standards with locking quadrant.

.3 Multi-leaf Opposed Blade Dampers: design to SMACNA detail with locking quadrant.

.4 Volume Extractor: factory fabricated, adjustable folding vane extractor with locking quadrant.

2.7 SMOKE DAMPERS

.1 Normally Closed, Reverse Acting Smoke Vent Dampers: folding airfoil blade, opening by gravity upon detection of smoke or from remote signal. Two flexible stainless steel blade edge seals.

.2 Normally Open, Smoke/Seal Smoke Dampers: folding airfoil blade, closing when actuated by electro-thermal link with flexible stainless steel blade edge. Stainless steel negator springs with locking device to ensure positive closure for units mounted horizontally in vertical ducts.

OR

.3 Motorized Smoke Dampers: folding airfoil blade, normally open with power on, automatic closure with power off. Both damper and operator ULC listed and labelled. End switch to monitor open or closed position.

2.8 COMBINATION FIRE/SMOKE DAMPERS

.1 Motorized Fire Smoke Dampers: fusible link rated to melt at 74°C with normally open ULC labelled damper operation to close when power is off.

.2 Damper Operator: **[24 volt electric] damper motor [complete with end switch].** Refer to Section 23 09 00, Controls.

2.9 BACKDRAFT DAMPERS

.1 Construction: automatic gravity operated, multi-leaf, aluminum or steel construction, counterweighted or spring assisted as required, maximum blade width 150 mm flexible vinyl sealing edges.

2.10 RELIEF DAMPERS

.1 Construction: automatic multi-leaf steel or aluminum dampers with ball bearing and counterweights, adjustable to relieve static pressure required, maximum blade width 150 mm, flexible vinyl sealing edges.

2.11 FAN DISCHARGE ISOLATION DAMPERS

.1 Frame: galvanized steel hot channel with corner braces.

.2 Blades: Airfoil shape, double skin galvanized steel, 200 mm maximum width, opposed blade configuration.

.3 Linkage: Face in air stream.

.4 Axles: 20 mm diameter, plated steel.

.5 Bearings: stainless steel.

.6 Minimum Module Size: 200 mm wide x 350 mm high.

.7 Maximum Module Size: 1500 mm wide x 1800 mm high.

2.12 FIRE STOP FLAPS

.1 Curtain Type: galvanized or prime coated mild steel, ULC listed and labelled, constructed to CAN4 S112.2. Ceiling firestop flap assemblies, with frame, spring loaded curtain dampers, fusible link rated at 74°C and upper and lower transition pans.

.2 Butterfly Type: galvanized steel with 1.6 mm thick non-asbestos cloth on unexposed side, ULC listed and labelled, constructed to CAN4 S112.2. Ceiling Firestop Flap Assemblies, corrosion resistant pins and linings, fusible link rated at 74°C.

2.13 FIRE RESISTANT THERMAL BLANKETS

.1 Construction: ULC labelled thermal blanket constructed of non-asbestos material with glass fibre cloth covering both sides.

2.14 FLEXIBLE DUCT

.1 Construction: vinyl sleeve interlocked by metal helix.

.2 Bend Radius: bending radius of 1 x diameter.

.3 Ratings: temperature rating of -6°C to 121°C; maximum operating pressure of 3000 Pa.

.4 Fastening: 25 mm x 1 mm thick galvanized steel drawband and seal with high velocity duct sealer.

.5 Insulation: 25 mm thick fibrous glass insulated cover with reinforced foil jacket, factory fabricated. Not applicable where air temperature in duct is greater than 15°C.

2.15 AIR BLENDERS

.1 Construction: standard unit is constructed of 1.60 mm aluminum; panels and vanes are all welded.

.2 Rating: temperature rating maximum to 150°C.

.3 Configuration: a fixed device unit with no moving parts to mix fresh air and return air to within ±1.6°C from design mix temperature when measured one equivalent duct diameter downstream of air blender.

3. Execution

3.1 FLEX CONNECTORS TO EQUIPMENT

.1 Allow 50 mm movement for flexible connectors on low pressure fans and equipment subject to forced vibration; 100 mm for medium and high pressure fans.

.2 Install with just sufficient slack to prevent vibration transmission.

.3 Provide fire retardant flexible connectors on [kitchen exhaust systems] [laboratory exhaust system].

3.2 DUCT ACCESS DOORS

.1 Provide 100 mm x 100 mm equipment access doors for inspection at balancing dampers and turning vanes.

.2 Provide 400 mm x 500 mm equipment access doors for servicing:
- .1 fire dampers
- .2 smoke dampers
- .3 combination dampers
- .4 automatic dampers
- .5 duct coils (access door required both sides of coil)
- .6 return air terminal boxes (at inlet)

.7 where required for cleaning, servicing or inspection of duct systems.

3.3 PLENUM ACCESS DOORS

.1 Provide 600 mm x 1200 mm plenum access doors in plenums where total body entry is required to service mixing dampers, coils, filters, humidifiers and fans. Install 150 mm above floor. Arrange door swing so that fan static holds door in closed position.

3.4 TURNING VANES

.1 Install full radius turning vanes in duct elbows where center line radius is less than 1.25 times width of duct.

.2 Install acoustic turning vanes in acoustic lined ductwork where center line radius is less than 1.25 times width of duct.

3.5 FIRE DAMPERS

.1 Provide fire dampers where duct penetrates fire rated membranes. Install to NFPA 90A and SMACNA Standard "Fire Damper Guide for Air Handling Systems".

.2 Recess curtain type fire damper so that free area of connecting ductwork is not reduced. Refer to detail drawing 23 33 00-DO2.

.3 Provide curtain type fire dampers in duct systems with pressure greater than 250 Pa.

.4 Provide multi-blade, offset butterfly or recessed curtain blade fire dampers on duct systems with pressure less than 250 Pa.

3.6 SMOKE DAMPERS

.1 Provide **[motorized] or [electro-thermal link]** smoke dampers where duct penetrates smoke separation zones.

.2 Install to SMACNA Standard.

3.7 COMBINATION FIRE/SMOKE DAMPERS

.1 Provide **[motorized] or [electro-thermal link]** combination fire/smoke dampers where duct penetrates a fire rated smoke separation zone.

.2 Install to SMACNA Standard.

3.8 BALANCING DAMPERS

.1 Install balancing dampers at all branch ducts on low pressure supply, return and exhaust air distribution ductwork and where indicated on drawings.

.2 Provide single blade dampers for duct sizes to 240 mm x 760 mm. Provide multi-blade opposed blade dampers with maximum blade size at 150 mm x 1800 mm.

3.9 BACKDRAFT DAMPERS

.1 Provide gravity backdraft dampers on all exhaust air outlets to outdoor and exhaust fans where motorized dampers are not indicated, and where shown on drawings.

3.10 FIRE STOP FLAPS AND THERMAL BLANKETS

.1 Install fire stop flaps on all ceiling grilles and diffusers located in rated ceiling assemblies.

.2 Provide fire resistant thermal blanket in conjunction with fire stop flaps on ceiling diffusers in fire rated ceiling assemblies to complete the rating from ceiling to fire stop flap.

.3 Install to SMACNA Standard.

3.11 FLEXIBLE DUCT

.1 Install maximum 500 mm length of flexible duct between ceiling diffuser and sheet metal duct.

3.12 AIR BLENDERS

END OF SECTION

1. General

1.1 RELATED REQUIREMENTS

.1 General Mechanical Provisions Section 21 05 00
.2 Documentation Section 23 01 00

1.2 PRODUCT OPTIONS AND SUBSTITUTIONS

.1 Refer to Division 01 for requirements pertaining to product options and substitutions.

1.3 QUALITY ASSURANCE

.1 Conform to AMCA Bulletins regarding construction and testing. Fans shall bear AMCA certified rating seal.

.2 Fans shall bear CSA label.

1.4 PERFORMANCE

.1 Fan performance scheduled in this Section is based on sea level conditions. Submit shop drawings based on local conditions.

1.5 SHOP DRAWINGS AND PRODUCT DATA

.1 Submit shop drawings and operating and maintenance data as per Section 21 05 00, 23 01 00 and 23 02 00.

.2 Acoustical data, fan curves showing performance with fan and system operating point plotted on curves.

1.6 JOB CONDITIONS

.1 Do not operate fans for any purpose, temporary or permanent until ductwork is clean, filters in place, bearings lubricated and fan has been run in under close supervision.

1.7 ALTERNATE PRODUCTS

.1 Equivalent fan selections shall not decrease motor horsepower, increase noise level, increase tip speed by more than 10% or increase inlet air velocity by more than 20% from that specified.

2. Products

2.1 ACCEPTABLE MANUFACTURERS AND PRODUCTS

.1 Centrifugal Fans: C.B.&.F., Carrier, Chicago, Joy, New York Blower, Trane, Aladdin, C.M.L., Twin City, Acme, Greenheck

.2 Cabinet Fans: Carrier, C.B.&.F., Delhi, Engineered Air, Lau, Lennox, Trane, Acme

.3 Propeller Fans: Acme, Ammerman, Carnes, C.B.&.F., Greenheck, Jenn-Air, Joy, Penn, Trane, Loren Cook, Can-arm

.4 Axial Flow Fans: C.B.&.F., Chicago, Joy, Trane, Woods, C.M.L., Northern

.5 Exhaust Fans (Centrifugal): Alpha, Delhi, Lau, Torin, Carnes

.6 Exhaust Fans (Centrifugal, Spun Aluminum): Carnes, Acme, Ammerman, Loren Cook, Greenheck, Jenn Air, Penn, Powerline

.7 Local Exhausters: Acme, Greenheck, Broan, Nutone, Penn, Reversomatic, Carnes

.8 Vent Sets: Ammerman, C.B.&.F., Carrier, Chicago, Delhi, Mark Hot, Trane, Loren Cook, Acme

.9 In-Line Centrifugal Fans: Greenheck, Ammerman, Trane, Loren Cook, Acme

2.2 FABRICATION

.1 Statically and dynamically balance fans so no objectionable vibration or noise is transmitted to occupied areas of the building.

.2 Provide balanced variable sheaves for motors 11 kW and under and fixed sheaves for 15 kW and over. Allow for replacement of variable sheaves with fixed sheaves after final air balance.

.3 Fans shall be capable of accommodating static pressure variations of +10% with no objectionable operating characteristics.

2.3 ROOF MOUNTED FANS

.1 Provide V-belt drives with fan and motor mounted to main housing through neoprene anti-vibration pads.

.2 Heavy aluminum dome type housings shall be reinforced as necessary on sizes with 500 mm wheel and larger.

.3 Provide with multi-blade, rattle free, backdraft damper with felt lined blade edges, birdscreen and curb caps.

.4 Unit shall be complete with electrical disconnect switch.

2.4 BELTED VENT SETS

.1 Comply generally with requirements of centrifugal fans suitable for pressures to 1 kPa.

.2 Provide with multi-blade rattle free backdraft damper with felt lined bladed edges.

.3 Drive pulleys shall be steel. Pot iron will not be accepted.

3. Execution

3.1 INSTALLATION

.1 Where inlet or outlet is exposed, provide safety screen.

.2 Provide belt guards on belt driven fans. Refer to Section 21 05 00, General Mechanical Provisions.

.3 Supply and install sheaves as necessary for final air balancing.

.4 Set roof mounted fans on curbs 200 mm minimum above roof. Provide acoustic insulation on duct to below roof line and on fan inlet plenum and drip pan for collecting condensation.

.5 Fasten safety chains on propeller circulating fans securely to structural steel. Ensure all components of fan assembly are fastened and secured to safety chain.

3.2 PAINTING

.1 Factory prime coat fan wheels and housing inside and outside. Prime coat on aluminum parts is not required.

.2 Provide two additional coats of paint on fans handling air downstream of humidifiers.

3.3 FAN SCHEDULE

.1 Refer to Fan Schedule on drawings.

END OF SECTION

1. General

1.1 RELATED REQUIREMENTS

.1 Mechanical Related Requirements — Section 21 05 00

1.2 RELATED WORK SPECIFIED IN OTHER SECTIONS

.1	Mechanical Systems Balancing	Section 23 05 93
.2	Ductwork and Breeching Insulation	Section 23 07 13
.3	Duct Accessories	Section 23 33 00
.4	Interior Luminaires	Division 26

1.3 WORK SPECIFIED BUT INSTALLED IN OTHER SECTIONS

.1 Door Grilles — Section 08 33 36

1.4 SHOP DRAWINGS AND SUBMITTALS

.1 Comply with requirements of Section 21 05 00

.2 Include a schedule of the following information:
- .1 Grille type and description
- .2 Size and location
- .3 Air flow volumes and noise levels
- .4 Finish
- .5 Accessories
- .6 Ceiling attachment

1.5 PRODUCT OPTIONS AND SUBSTITUTIONS

.1 Refer to Division 1 for requirements pertaining to product options and substitutions.

1.6 ABBREVIATIONS

.1 ADC: Air Diffusion Council

.2 AMCA: Air Movement and Control Association

1.7 PERFORMANCE STANDARDS

.1 Unit performance ratings listed in manufacturer's data shall be tested to the following standards:

- .1 Ceiling Diffusers: to ADC Equipment Test Code 1062 R1 and ASHRAE Standard 36B63.
- .2 Light Troffer Diffusers: to ADC Equipment Test Code 1062 R4 and ISO Standard 3741.
- .3 Supply Grilles: to ADC Equipment Test Code 1062 R2 and ASHRAE Standard 36B63.
- .4 Louvres: to AMCA Standard 500 test procedure.

2. Products

2.1 ACCEPTABLE MANUFACTURERS AND PRODUCTS

.1 Grilles, Registers, Diffusers: E.H. Price, Titus, Krueger, Carnes, Nailor

.2 Louvres: Aerolite, Ruskin, Westvent, Carnes, Tamco

.3 Roof Hoods: Penn (Airette), Westvent, Carnes, Greenheck., Loren Cook

3. Execution

3.1 INSTALLATION

.1 Make airtight connection between diffusers and ductwork.

.2 Provide balancing damper on duct take-off to each diffuser at main branch take-off, even when volume dampers are specified as part of grille assembly. For details of balancing dampers, refer to Section 23 33 00, Ductwork Accessories.

.3 Sizes indicated are nominal. Provide correct standard product nearest to nominal to deliver the capacity listed without increasing noise levels or pressure drop.

.4 Refer to detail drawing 23 33 00 D03 in Section 23 33 00, Ductwork Accessories, for wall grilles installed in fire rated walls.

.5 Arrange to paint ductwork visible behind air outlets matt black. Refer to Section 09900.

.6 Confirm air outlet/inlet and louvre dimensions, mounting, finish and colours with ceiling and wall construction prior to submitting shop drawings.

.7 Adjust supply outlets to deliver patterns defined on drawings or as directed by Consultant.

.8 Provide smudge resistant frames on diffusers located in textured ceilings.

.9 Provide factory finish on each air inlet/outlet, louvre and intake hood as scheduled.

.10 Mount roof hoods and goosenecks on 300 mm high curb base.

3.2 AIR INLET/OUTLET SCHEDULE

.1 Refer to Schedule.

END OF SECTION

1. General

1.1 RELATED SECTIONS

.1	Mechanical Spare Parts and Maintenance Materials:	Section 23 02 00
.2	Air Handling Units:	Section 23 73 13
.3	Ductwork Accessories:	Section 23 33 00

1.2 QUALITY ASSURANCE

.1 Provide filters, filter media and filter components by the same manufacturer.

.2 Filter media shall be UL listed, Class I or Class II, as approved by local authorities.

1.3 ALTERNATIVES

.1 Size, media face area, NBS test efficiency, initial and final air resistance of air filter products supplied by alternative manufacturers shall be same as type specified in this section.

2. Products

2.1 FRAMES

.1 Fabricate filter frames and supporting structures of galvanized steel or extruded aluminum with necessary gasketting between filter frames and mounting "T's" on walls. Provide filter holding frames 1.6 mm, "T" section construction.

.2 Provide standard size frames to provide interchangeability of filter media for other manufacturers.

2.2 GREASE FILTERS

.1 Media: 14 mesh steel screen, zinc electroplated, alternate layers of flat herringbone crimp, four layers per 25 mm rod reinforced, enclosed in 1.0 mm stainless steel frame.

2.3 PANEL FILTERS

.1 Media: 50 mm thick fibrous glass blanket, factory sprayed with flameproof, non-drip, non-volatile adhesive.

.2 Holding Frames: 1.2 mm minimum galvanized frame with expanded metal grid on leaving air side and steel rod grid on air entering side, hinged with pull and retaining handles.

2.4 HIGH EFFICIENCY BAG FILTERS

.1 Media: Reinforced glass fibre preformed into series of pockets and bonded to header. Provide approximately 9.8 m^2 media per 1000 L/s capacity.

.2 Holding Frames: 1.6 mm galvanized steel with sealing grooves and gaskets, locking clips and provision for front mounted pan prefilter and front or rear removal of filter media.

.3 Efficiency: Minimum 45% NBS atmospheric type tests.

2.5 HIGH EFFICIENCY PARTICULATE AIR (HEPA) FILTERS

.1 HEPA Filters: to Institute of Environmental Sciences Standard for HEPA filters IES RP-CC-001.3-1993.

.2 Media: Multiple pleated surface configuration of deep space folds of submicron, fire retardant, water repellent glass fibre paper disposable cells. Media pack sealed within cell sides with fire retardant epoxy bond. Initial filter resistance not exceeding 200 Pa with an average air velocity of 0.5 m/s across the filter.

.3 Holding Frame: 2.6 mm extruded anodized aluminum with sealing grooves and neoprene rubber gaskets on both sides, and locking clips. Provide for one side only removal of filter media, with hinged gasketted access door.

.4 Static Pressure Ports: 6 mm pipe nipple with cap, 300 mm on center, located on top of housing, downstream of HEPA filter.

.5 Disctylphthalate (DOP) Test Ports: 12 mm pipe nipple with cap welded to the top of the housing upstream of the filter bank with a second 12 mm pipe nipple with cap for downstream sample. Provide a 50 mm pipe nipple and cap to fit over DOP inlet. All pipe nipple and cap materials, schedule 40 type 304 stainless steel. Weld DOP inlet and downstream sample ports no less than 10 (equivalent) duct diameters upstream and downstream (respectively) from filter bank.

.6 Efficiency: minimum 99.97% when challenged with a thermally generated disctylphthalate (DOP) aerosol whose particulate size is 0.3 microns. Individually test each filter individually to ensure conformance to this efficiency. Refer to Section 23 08 00, Mechanical Testing.

2.6 ROLL FILTERS

.1 General Assembly: Heavy gauge galvanized steel assembly with drive, controls and media which feeds media across air stream and winds and compresses used media for disposal. Enclose clean media roll with a hinged roll cover. Include tension panel to allow compression of used media as it is spooled. Arrange to allow upstream replacement of filter media.

.2 Media: Rolled and compressed, graduated density fibrous glass blanket, nominally 50 mm thick when expanded, factory sprayed with flameproof, non-drip, non-volatile adhesive. Bonded reinforcing steel wires on leaving side of media to prevent stretching and necking of media.

.3 Efficiency: Media efficiency minimum 80% NBS to hold minimum 2 kg/m^2.

.4 Drive Mechanism: Electric gear reducer motor to rewind spool through chain and sprocket assembly.

.5 Controls: Provide manual switch to advance media.

2.7 ELECTRONIC AIR CLEANERS

.1 General Assembly: Heavy gauge galvanized steel assembly containing electronic agglomerator and panel filters.

.2 Electronic Agglomerator: Independently supported and nested collection cells of aluminum construction including ionizing wires grounded struts, positive and negative plates, insulators, ionizer and plate contacts. Locate insulators out of air stream.

.3 Power Pack: Self-contained, pre-wired rectifying unit to convert 115 V AC to approximately 12 kV DC for ionizer and 6 kV DC for collector, including overload protection, on-off switch, pilot light indicating operating status and safety accessories.

.4 Safety Accessories: For filter plenum access doors, provide manual reset safety switches and warning lights and enamelled high voltage warning signs. Provide signal lights and safety switching upstream and downstream of unit within duct.

.5 Efficiency: Media efficiency minimum 90% NBS atmospheric type tests.

3. Execution

3.1 INSTALLATION

.1 Construct and install filters to prevent passage of unfiltered air. Provide felt, rubber or neoprene gaskets.

.2 Do not operate fan system connected to filter banks until filters temporary or permanent are in place. Provide new filters at take-over by the Owner. Replace filters used during construction.

.3 Install HEPA filters as follows:

.1 Allow adequate access space to facilitate "bag in/bag out" replacement of filtration media through side access door.

.2 Install DOP test ports, welded into duct.

.3 Install 600 mm x 600 mm gasketted access doors upstream of filter panel specified in Section 23 33 00.

.4 Test HEPA filter performance after air balancing is complete and submit report.

.4 Provide filter banks in arrangement shown with removal and access indicated.

3.2 PERFORMANCE

.1 Refer to Filter Schedule.

END OF SECTION

1. General

1.1 RELATED REQUIREMENTS

.1	General Mechanical Provisions	Section 21 05 00

1.2 RELATED WORK SPECIFIED IN OTHER SECTIONS

.1	Motors	Section 23 05 13
.2	Ductwork Insulation	Section 23 07 13
.3	Mechanical Vibration Control	Section 23 05 48
.4	BMCS General Provisions	Section 23 09 00
.5	Circuit and Motor Disconnects	Division 26
.6	Motor Control Centres	Division 26
.7	Electrical Connection of Equipment	Division 26

1.3 SHOP DRAWINGS AND SUBMITTALS

.1 Comply with requirements of Section 21 05 00.

.2 Submit the following technical data:
- .1 Fan performance curves.
- .2 Physical data:
  - .1 Dimensions
  - .2 Weight
  - .3 Service space and clearance requirements
- .3 Electrical data:
  - .1 Motor power requirements.
  - .2 Electrical circuit wiring diagrams including field wiring requirements.
  - .3 Voltage, phase of power supply.
- .4 Complete installation instructions.

1.4 PRODUCT OPTIONS AND SUBSTITUTIONS

.1 Refer to **Division 1** for requirements pertaining to product options and substitutions.

1.5 FLAME/SMOKE DEVELOPED RATING

.1 Acoustic linings shall have maximum flame spread ratings less than or equal to 25 and maximum smoke developed of 50, when tested in accordance with CAN4 S102, NFPA 255 or ASTM E84.

.2 Materials must withstand service temperatures without smouldering, flowing, smoking or flaming when tested in accordance with ASTM C411.

1.6 QUALITY ASSURANCE

.1 Unit shall be CSA labelled and CGA certified. Construct to CAN1-3.7.

2. Products

2.1 ACCEPTABLE MANUFACTURERS AND PRODUCTS

.1 Engineered Air, ICE

2.2 CASING

.1 Construction: 1.2 mm steel panels, rigidly constructed and reinforced with structural angles and channel base and frame.

.2 Finish: baked enamel finish, colour to manufacturer's standards.

.3 Access: hinged, insulated access panels with handle fastener to burner section, blower section and filter section.

.4 Insulation:
- .1 Material: acoustic linings as specified in Section 23 07 13, Ductwork Insulation.
- .2 Thickness: 25 mm.

.5 Accessories:
- .1 Intake hood for weather protection.

2.3 BURNER ASSEMBLY

.1 Gas Train: CGA approved gas train, including the following components:
- .1 Plug valve on gas service inlet.
- .2 Unions to access components.
- .3 Gas regulator and pressure taps.
- .4 Main shut-off solenoid valve.
- .5 Modulating gas valve.
- .6 Main firing valve and pressure taps.
- .7 Pilot cock.
- .8 Pilot regulator.
- .9 Pilot solenoid and pressure tap.
- .10 Pilot firing valve.

.2 Burner: suitable for natural gas with profile plates to maintain velocity across burner with a 25:1 turndown ratio.

.3 Pilot: electronic ignition with ultra violet flame supervision.

2.4 BLOWER ASSEMBLY

.1 Type: forward curved centrifugal.

.2 Shaft: solid steel, ground and polished.

.3 Bearings: internally mounted, heavy duty, self-aligning, greaseable ball bearings.

.4 Drive:
- .1 V-belt with matching motor sheaves to delivery volume as scheduled.
- .2 Belt tension adjustment.

.3 Variable pitch sheaves on motors up to 3.7 kW; fixed sheaves on motors 5.6 kW and larger.
.4 Belt guards on fan. Refer to Section 21 05 00, General Mechanical Provisions.

.5 Vibration Isolation: fan assembly mounted on Type A base supported on Type 1 isolators. Refer to Section 23 05 48.

.6 Motor: as specified in Section 23 05 13.

2.5 FILTERS

.1 Type: disposable type, oil impregnated fibrous glass.

.2 Thickness: 50 mm.

.3 Efficiency; 79%.

.4 Frames: metal mounting frames.

2.6 MOTORIZED INTAKE DAMPER

.1 Assemble motorized damper with the following components:
.1 Frame: 2.0 mm thick galvanized steel.
.2 Blade: double sheet, minimum 0.8 mm thick galvanized steel.
.3 Bearings: oil impregnated plastic.
.4 Linkage: steel, zinc plated.
.5 Seals: synthetic elastomer on top and bottom of frame and blade edge.

.2 Air Leakage: maximum 1% at 10 m/s face velocity and 1 kPa static pressure.

.3 Motor Operator:
.1 Voltage: 120 V.
.2 Temperature Range: -40°C to 54°C.
.3 Enclosure: die cast aluminum body with rolled aluminum cover and gasket.
.4 Rotation: field adjustable, from 90° to 270°.

.4 End Switch: 110 V switch to prove damper 100% open.

2.7 OPERATING CONTROLS

.1 General Assembly: factory wired and tested control systems with terminal strips suitable for one power connection.

.2 Control Power: 24 V control transformer integral with unit.

.3 Interlock burner to fire when:
.1 End switch on motorized damper proven open.
.2 Exhaust fan(s) operational as scheduled.
.3 Air flow is proven by air flow switch integral with unit.
.4 Purge period timer with bypass to allow low air temperature discharge during this period.
.5 Discharge temperature limit control, high and low with manual reset.

.4 Profile Damper Interlock: exhaust fan(s) operational with profile damper motor for dual volume units as scheduled.

.5 Temperature Control: adjustable range discharge thermostat with:

.1 Remote adjustment

.2 Outside air temperature (OAT) override to shut down burner with OAT is 18°C or greater.

.6 Timer Control: programmable, 24 h, 365 day timer to energize exhaust fan interlocked with unit.

.7 CO, NO2, CNG Exhaust Control: to energize exhaust fan interlocked with unit.

2.8 MOTOR CONTROL AND ELECTRICAL COMPONENTS

.1 Starter: magnetic contactor with overload protection as specified in Division 16.

.2 Disconnect: non-fused disconnect as specified in Division 16.

.3 Transformer: 110 V step down transformer.

.4 Fuses: 110 V control fuses.

2.9 CONTROL PANEL

.1 Construction: 1.2 mm thick steel panel, rigidly constructed.

.2 Finish: baked enamel, finished same as unit casing.

.3 Access: hinged, insulated access panel with handle.

.4 Insulation:
.1 Material: acoustic lining as specified in Section 23 07 13, Ductwork and Breeching Insulation.
.2 Thickness: 25 mm.

.5 Cabinet Heater: 110 V electric heater, 700 W, thermostatically controlled.

2.10 REMOTE CONTROL PANEL

.1 Cabinet Construction: 1.2 mm steel panel, 200 mm x 150 mm x 100 mm deep.

.2 Blower Switch: On/off/auto switch with pilot light to start/stop blower.

.3 Heat Switch: heat on/off switch with pilot light.

.4 Clogged Filter Light: differential pressure switch across filter bank to illuminate pilot light on excess pressure drop.

.5 Thermostat: adjustable electric thermostat marked warmer/cooler.

3. Execution

3.1 UNIT CLEARANCES

.1 Control side: minimum 1 m.

.2 Top: minimum 25 mm.

.3 Non-Control Side: minimum 25 mm.

3.2 CERTIFICATION

.1 Submit certification from manufacturer that this equipment has been installed, connected and is ready to be put into operation in accordance with factory recommended procedure.

3.3 START-UP

.1 Start-up procedure to be executed by manufacturer's personnel. Submit complete check out list and report to Consultant.

3.4 TRAINING

.1 Manufacturer's representative to attend training seminar and instruct Owner on routine maintenance procedures and operations.

3.5 PERFORMANCE SCHEDULE

.1 Provide direct fired units to meet the following performance requirements:
- .1 Intake hood
- .2 Remote temperature adjustment
- .3 Timer control
- .4 Monoxide exhaust control
- .5 Remote control panel
- .6 High efficiency motor
- .7 Outside air temperature override.

.2 Refer to Schedule on drawings.

END OF SECTION

1. General

1.1 RELATED WORK SPECIFIED IN OTHER SECTIONS

.1	Packaged Outdoor Air Handling Systems	Section 23 73 13
.2	Electronic Single Duct Air Terminal Units	Section 23 73 40

1.2 PRODUCT OPTIONS AND SUBSTITUTIONS

.1 Refer to Division 01 for requirements pertaining to product options and substitutions.

1.3 QUALITY ASSURANCE

.1 Certify coil capacities, pressure drops and selection procedures in accordance with ARI Standard 410-72.

.2 Pressure test coils to 1.5 times working pressure; minimum test pressure at 1480 kPa.

1.4 SHOP DRAWINGS AND PRODUCT DATA

.1 Comply with requirements of Section 21 05 00 and 23 01 00.

2. Products

2.1 ACCEPTABLE MANUFACTURERS AND PRODUCTS

.1 Aerofin, Carrier, Swirlfin, Trane, Vaporfin, Engineered Air, Heatcraft, McQuay, Rosemex

2.2 CONSTRUCTION

.1 Construct extended surface coils with tubes of copper or brass expanded into headers for permanent, leak tight joint.

.2 Construct fins of plate type aluminum or copper with fin collars mechanically bonded to tube, accurately spaced.

.3 Mount coil section in 1.6 mm thick galvanized steel casing designed for bolting to other sections of ductwork. Provide 2 mm thick galvanized steel center support on coils with header heights greater than 915 mm and on coils longer than 1070 mm.

.4 Construct headers of grey cast iron or round, seamless copper.

.5 Coils to be suitable for maximum 1380 kPa working pressure, at 104°C fluid temperature.

.6 Construct coils with maximum length of 3 m per section.

.7 Construct coils with foam sealing strip between casing and fins.

3. Execution

3.1 INSTALLATION

.1 Construct 0.9 mm thick galvanized steel insulated drip pan extending 80 mm from coil face, with drain connection for each cooling coil section.

.2 Support coil sections on steel channel or double angle frames and secure to casings. Arrange supports for cooling coils so not to pierce or short circuit drip pans.

.3 Install moisture eliminator on cooling coils with face velocity greater than 2.5 m/s.

.4 Provide airtight seal between coil and duct or unit cabinets.

.5 Make connections to coils, including valves, air vents, unions and connections from drip pans. Refer to specification details for valving/piping details.

.6 Locate water supply at bottom of supply header and return water connection at top to provide self-venting and reverse return arrangement. Provide float operated automatic air vents at high points complete with stop valve. Ensure water coils are drainable; provide drain connection at low points.

.7 Protect coils so fins and flanges are not damaged. Replace loose and damaged fins. Comb out bent fins.

.8 Install coils level.

.9 Install deep seal trap (minimum 150 mm deep) on drain line from drip pan to floor drain.

3.2 SCHEDULE

.1 Refer to Coil Schedule.

END OF SECTION

Appendix B

Electrical Drawings

and

Technical Specifications

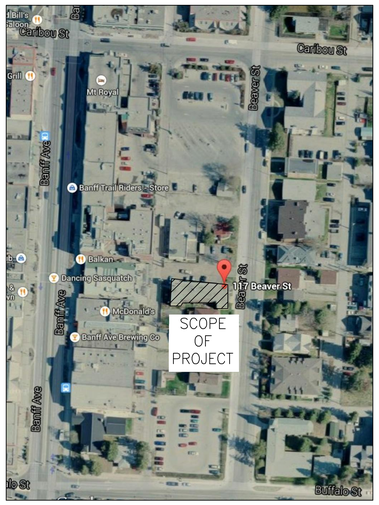

1 E1.0 **SITE PLAN AND LOCATION**
SCALE: N.T.S.

LEGEND

	MECHANICAL EQUIPMENT TAG
	MOTOR
	MOTOR WITH DISCONNECT SWITCH
	FUSEABLE DISCONNECT SWITCH
	120/240V, 1ø PANEL
	FIRE ANNUNCIATOR PANEL
	DATA (BIX) PANEL
	FLOOR MOUNTED JUNCTION BOX
	WALL MOUNTED JUNCTION BOX
	CONDUIT RUN UP
	CONDUIT RUN DOWN
	DISTRIBUTION MOLDED CASE BREAKER
E	EXISTING DEVICE TO REMAIN
X	EXISTING DEVICE TO BE REMOVED
	DUCT SMOKE DETECTOR

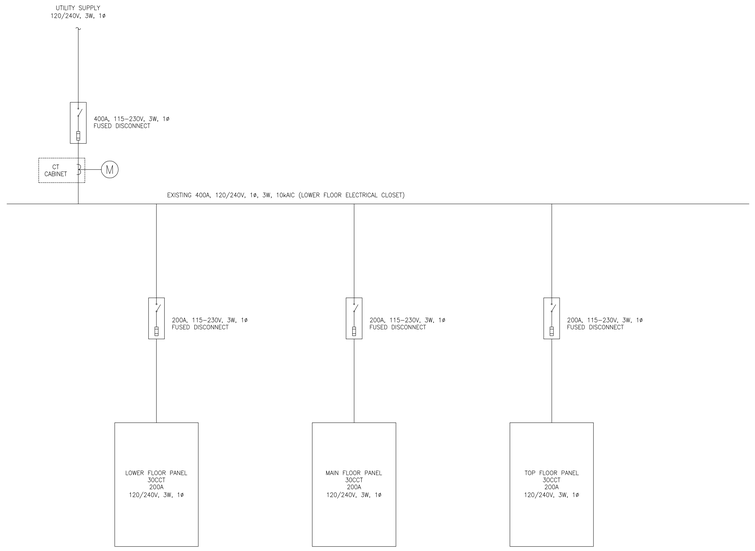

8 E1.0 **EXISTING SINGLE LINE DIAGRAM**
SCALE: N.T.S.

TRUE NORTH
PROJECT NORTH

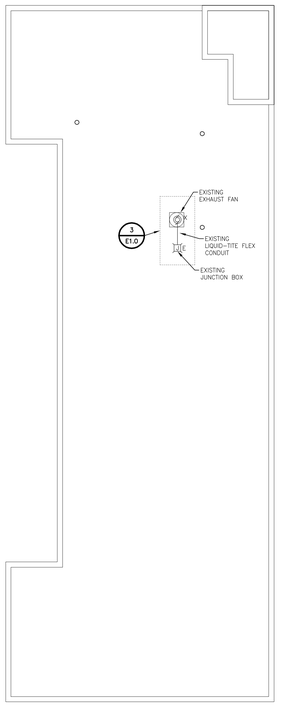

2 E1.0 **ROOF DEMOLITION PLAN**
SCALE: N.T.S.

3 E1.0 **EXISTING ROOF TOP EXHAUST FAN AND WEATHERPROOF JUNCTON BOX**
SCALE: N.T.S.

NOTES:
1. DISCONNECT AND REMOVE EXISTING EXHAUST FAN AND MAKE SAFE CONDUCTORS.
2. EXISTING CONDUCTORS AND JUNCTION BOX TO REMAIN.

7 E1.0 **EXISTING FIRE ALARM PANEL**
SCALE: N.T.S.

8 E1.0 **EXISTING EXHAUST FAN SHUTDOWN (FIRE ALARM)**
SCALE: N.T.S.

PANEL DESIGNATION 'LOWER FLOOR' (EXISTING)

MOUNTING:	SURFACE	VOLTAGE	120/240 V	BUS RATING:	200 A
PANEL LOCATION:	LOWER FLOOR ELECTRICAL CLOSET	PHASES	1	FED FROM:	MAINS
		WIRE	3		
LOAD SERVING:	LOWER FLOOR, MECHANICAL	CIRCUITS	30	INTERRUPTING CAPACITY:	10 kAIC

LOAD										LOAD		
CCT. NO.	DESCRIPTION	BRKR. SIZE	kVA A	kVA B	kVA A	kVA B	BRKR. SIZE	DESCRIPTION	CCT. NO.
1	#2 KITCHEN	WAFER					15A	SPACE	2
	#3 KITCHEN	15A							
3	#2 SUITE	WAFER					20A	OUTSIDE PLUGS FRONT AND LOCKERS	4
	#3 SUITE	15A							
5	DRYER	30A					15A	#1 SUITE	6
7		2P					20A	#1 KITCHEN	8
9	#4 SUITE	15A					15A	BOILER	10
11	#4 KITCHEN	20A					15A	UNKNOWN	12
13	LAUNDRY	15A					2P		14
15	LAUNDRY	15A					WAFER	BOILER ROOM LIGHTS	16
17	LAUNDRY	15A					15A	CAR PLUGS / SPARE	18
							WAFER	WASHER	
							15A	CAR PLUGS	
19	FAN ON ROOF	20A					30A	DRYER	20
21		2P					2P		22
23	#4 RANGE	15A					40A	#2 RANGE	24
25		2P					2P		26
27	#1 RANGE	15A					40A	#3 RANGE	28
29		2P					2P		32
			0.00	0.00	0.00	0.00			

A TOTAL LOAD = 0.00
B TOTAL LOAD = 0.00
* PROVIDE ARC FAULT BREAKERS TO FEED BEDROOM RECEPTACLES
TOTAL LOAD : 0.00 kVA CONNECTED (0.00 AMP)

5 E1.0 **EXISTING 120/240V, 1Ø PANEL -LOWER FLOOR ELECTRICAL CLOSET**
SCALE: N.T.S.

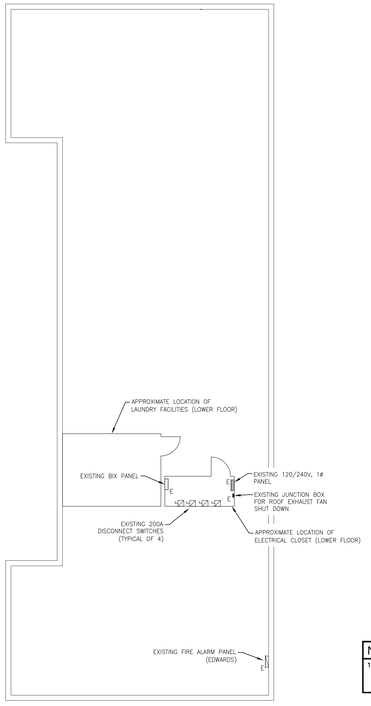

4 E1.0 **LOWER FLOOR DEMOLITION PLAN**
SCALE: N.T.S.

NOTES:
1. ROOF TOP EXHAUST FAN: EXISTING CONDUCTORS, 2P-20A BREAKER (CIRCUITS 19/21) AND FIRE ALARM SHUT DOWN FAN TIE-IN TO BE RE-USED. DO NOT REMOVE.

notes

no.	date	revision
A	15-11-13	ISSUED FOR TENDER

consultant
MCW Hemisphere Ltd.
CONSULTING ENGINEERS
* EDMONTON * CALGARY *
#202, 838 11 Avenue SW, Calgary, Alberta, T2R 0E5
TEL (403) 245-6448 FAX (403) 244-0191
MCW#C15005

permit

north
seal
13-11-15
MCW Hemisphere Ltd.
Permit Number: P13022

project
BEAVER STREET APPARTMENTS – BANFF MAKE-UP AIR ADDITION
CALGARY ALBERTA

title
SITE PLAN, LEGEND & DEMOLITION PLAN

date 2015-11-13	drawn by	scale AS NOTED
checked by	approved by	project no. C15005
revision A	drawing no. E1.0	

Login: BMorris C:\Users\BMorris\Desktop\SITE PLAN & LEGEND.dwg Nov 13, 2015 - 4:18pm

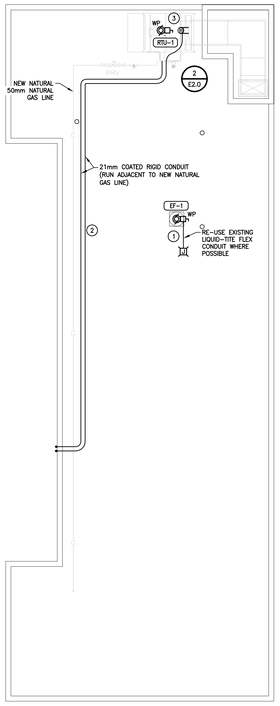

1 E2.0 **ROOF LAYOUT**
SCALE: N.T.S.

2 E2.0 **PROPOSED RTU-1 LOCATION**
SCALE: N.T.S.

3 E2.0 **ROOF TOPPER**
SCALE: N.T.S.

NOTES:

1. CONDUIT FITTINGS ON EXTERIOR OF BUILDING TO BE COMPRESSION TYPE RAINT-TIGHT FITTINGS.

KEY NOTES:

1. RE-USE EXISTING FLEXIBLE CONDUIT AND CONDUCTORS WHERE POSSIBLE. SUPPORT CONDUIT EVERY 300mm USING ARLINGTON ROOF TOPPERS MODEL No. RTSE405L (OR SIMILAR – SEE PHOTO 3/E2.0). PROVIDE NEW NEMA TYPE 3R (MINIMUM) WEATHERPROOF DISCONNECT.
2. PROVIDE 2x21mm COATED RIGID STEEL CONDUIT AND CONDUCTORS. SUPPORT CONDUIT ACCORDING TO LATEST REVISION OF C.E.C. USE ARLINGTON ROOF TOPPERS MODEL No. RTSE405L (OR SIMILAR – SEE PHOTO 3/E2.0). COORDINATE WITH MECHANICAL CONTRACTOR ON SITE.
3. PROVIDE NEW 240V, 30A NEMA TYPE 3R (MINIMUM) WEATEHRPROOF DISCONNECT AT ROOF-TOP-UNIT RTU-1. FINAL CONNECTION TO RTU-1 TO BE FLEXIBLE LIQUID-TITE CONDUIT.

PANEL DESIGNATION 'LOWER FLOOR' (EXISTING)

MOUNTING:	SURFACE	VOLTAGE	120/240 V	BUS RATING:	200 A
PANEL LOCATION:	LOWER FLOOR ELECTRICAL CLOSET	PHASES	1	FED FROM:	MAINS
		WIRE	3		
LOAD SERVING:	LOWER FLOOR, MECHANICAL	CIRCUITS	30	INTERRUPTING CAPACITY:	10 kAIC

LOAD					LOAD				
CCT. NO.	DESCRIPTION	BRKR. SIZE	kVA A	kVA B	kVA A	kVA B	BRKR. SIZE	DESCRIPTION	CCT. NO.
1	#2 KITCHEN	WAFER					15A	SPACE	2
	#3 KITCHEN	15A							
3	#2 SUITE	WAFER					20A	OUTSIDE PLUGS FRONT AND LOCKERS	4
	#3 SUITE	15A							
5	DRYER	30A / 2P					15A	#1 SUITE	6
7							20A	#1 KITCHEN	8
9	#4 SUITE	15A					15A	BOILER	10
11	#4 KITCHEN	20A					15A	UNKNOWN	12
13	SPARE	15A					/ 2P		14
15	SPARE	15A					WAFER	BOILER ROOM LIGHTS	16
							15A	CAR PLUGS / SPARE	
17	SPARE	15A					WAFER	WASHER	18
							15A	CAR PLUGS	
19	ROOF FAN	20A / 2P					30A / 2P	DRYER	20
21	EF-1								22
23	#4 RANGE	15A / 2P					60A / 2P	NEW 120/240V, 1ϕ PANEL	24
25									26
27	#1 RANGE	15A / 2P					40A / 2P	#3 RANGE	28
29									32
			0.00	0.00	0.00	0.00			

A TOTAL LOAD = 0.00
B TOTAL LOAD = 0.00
* PROVIDE ARC FAULT BREAKERS TO FEED BEDROOM RECEPTACLES
TOTAL LOAD : 0.00 kVA CONNECTED (0.00 AMP)

6 E2.0 **EXISTING 120/240V, 30CCT PANEL - UPDATED**
SCALE: N.T.S.

PANEL DESIGNATION 'NEW'

MOUNTING:	SURFACE	VOLTAGE	120/240 V	BUS RATING:	100 A
PANEL LOCATION:	EELCTRICAL CLOSET LOWER LEVEL	PHASES	1	FED FROM:	120/240V PANEL
		WIRE	3		
LOAD SERVING:	VARIOUS ROOF TOP UNIT	CIRCUITS	12	INTERRUPTING CAPACITY:	10 kAIC

LOAD					LOAD				
CCT. NO.	DESCRIPTION	BRKR. SIZE	kVA A	kVA B	kVA A	kVA B	BRKR. SIZE	DESCRIPTION	CCT. NO.
1	LAUNDRY	15A					30A / 2P	ROOF TOP UNIT RTU-1	2
3	LAUNDRY	15A							4
5	LAUNDRY	15A							6
7	#2 RANGE	40A / 2P							8
9									10
11									12
			0.00	0.00	0.00	0.00			

A TOTAL LOAD = 0.00
B TOTAL LOAD = 0.00
* PROVIDE ARC FAULT BREAKERS TO FEED BEDROOM RECEPTACLES
TOTAL LOAD : 0.00 kVA CONNECTED (0.00 AMP)

7 E2.0 **NEW 120/240V, 12CCT PANEL**
SCALE: N.T.S.

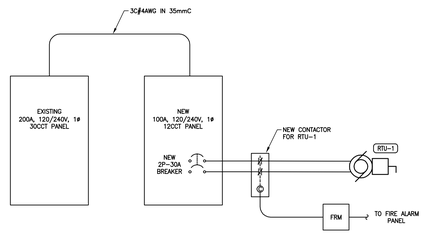

9 E2.0 **ELECTRICAL CLOSET LAYOUT (NEW)**
SCALE: N.T.S.

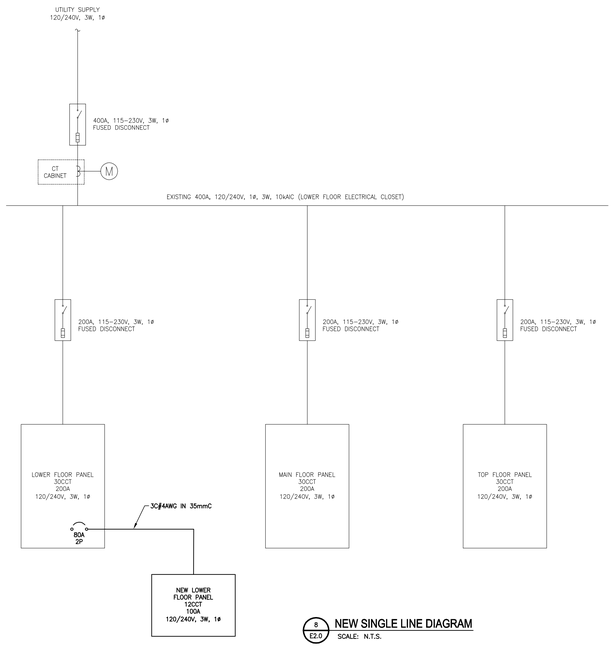

8 E2.0 **NEW SINGLE LINE DIAGRAM**
SCALE: N.T.S.

5 E2.0 **NEW 120/240V PANEL LOCATION**
SCALE: N.T.S.

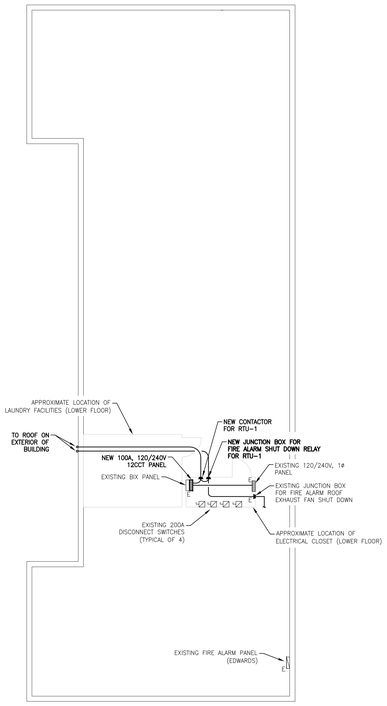

4 E2.0 **ELECTRICAL CLOSET (LOWER FLOOR) LAYOUT**
SCALE: N.T.S.

NOTES:

1. PROVIDE NEW 100A, 120/240V, 1ϕ, 12CCT PANEL BELOW EXISTING BIX COMMUNICTION PANEL (SEE PHOTO 5/E2.0).
2. RUN 3C#4AWG IN 35mmC FROM EXISTING PANEL TO NEW PANEL AND PROVIDE NEW 2P-80A CIRCUIT BREAKER IN EXISTING PANEL (SEE 9/E2.0).
3. RELOCATE EXISTING LAUNDRY FACILITES CIRCUITS AND BREAKERS FROM EXISTING PANEL TO NEW PANEL AND RE-TERMINATE (SEE DRAWINGS 6,7,8 & 9/E2.0).
4. PROVIDE NEW 2P-30A BREAKER IN NEW 120/240V, 1ϕ PANEL FOR ROOF-TOP-UNIT RTU-1 (SEE 7/E2.0).
5. RUN 3C#10 IN 21mmC FROM NEW PANEL TO CONTACTOR AND THEN TO EXTERIOR OF BUILDING (SEE 9/E2.0).
6. PROVIDE NEW FIRE ALARM SHUT DOWN RELAY FOR ROOF-TOP-UNIT RTU-1 LOCATED ADJACENT TO NEW 100A, 120/240V, 1ϕ PANEL AND TIE-IN TO NEW CONTACTOR AND EXISTING FIRE ALARM INITIATING CIRCUIT (SEE 9/E2.0).
7. RE-USE EXISTING 2P-20A BREAKER (CCT# 19/21 – 6/E2.0) IN EXISTING 200A, 120/240V, 1ϕ PANEL. EXISTING CONDUCTORS, EXISTING CONDUIT AND ROOF-TOP EXHAUST FAN FIRE ALARM SHUT DOWN RELAY TO FEED NEW EXHAUST FAN EF-1.
8. EXTERIOR WALL PENETRATIONS TO BE SEALED, PATCHED AND MADE NEW BY CONTRACTOR.
9. VERIFICATION OF FIRE ALARM DEVICES AFFECTED BY RENOVATION AND NEW DEVICES TO BE COMPLETED AT END OF CONSTRUCTION.

MECHANICAL MOTOR EQUIPMENT SCHEDULE

N0	GENERAL DESCRIPTION	LOCATION	HORSE POWER	FULL LOAD AMPS	KW	VOLTAGE	PHASE	OVERCURRENT PROTECTION	FEEDER SIZE	FED FROM	DISCONNECT PROVIDED BY ELEC (Y,N,N/A)	STARTER: PROVIDED BY ELEC (Y,N,N/A)	STARTER: MAG	STARTER: MAN	POWER: NORMAL	POWER: EMERGENCY	COMMENTS/CONTROLS
EF-1	EXHAUST FAN	ROOF TOP	3/4	7.6		208	1	2P-30A	2#12AWG IN 21mmC (EXISTING)	LOWER FLOOR PANEL (CCT 19/21)	Y	N			X		GREENHECK MODEL No. GB-161HP-7 (ELECTRICAL TO PROVIDE DISCONNECT)
RTU-1	ROOF TOP UNIT	ROOF TOP	3	22.2		230	1	2P-30A	2#10AWG IN 21mmC	NEW LOWER FLOOR PANEL	Y	N			X		ENGINEERED AIR MODEL No. DJS60/C (ELECTRICAL TO PROVIDE DISCONNECT)

TRUE NORTH
PROJECT NORTH

notes

no.	date	revision
A	15-11-13	ISSUED FOR TENDER

consultant
MCW Hemisphere Ltd.
CONSULTING ENGINEERS
* EDMONTON * CALGARY *
#202, 838 11 Avenue SW, Calgary, Alberta, T2R 0E5
TEL (403) 245-6448 FAX (403) 244-0191
MCWHC15005

permit

north
N W E S

seal
PROFESSIONAL ENGINEER ALBERTA
13-May-15
MCW Hemisphere Ltd.
Permit Number: P13022

project
BEAVER STREET APPARTMENTS – BANFF MAKE-UP AIR ADDITION
CALGARY ALBERTA

title
RENOVATION PLAN

date	drawn by	scale
2015-11-13		AS NOTED
checked by	approved by	project no. C15005
revision A	drawing no. E2.0	

Login: BMoore C:\Users\BMoore\Desktop\CONSTRUCTION & RENOVATION PLAN.dwg Nov 13, 2015 - 4:22pm

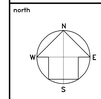

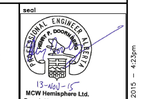

1. PART 1 – GENERAL

1.1. GENERAL PROVISIONS

1.1.1. THE GENERAL CONDITIONS OF THE CONTRACT AND ADDENDA SHALL FORM AN INTEGRAL PART OF THIS DIVISION OF THE WORK AND SHALL BE READ IN CONJUNCTION WITH THIS SPECIFICATION.

1.2. SCOPE

1.2.1. CONTRACTOR SHALL PROVIDE ALL LABOUR AND EQUIPMENT NECESSARY FOR THE COMPLETION OF THE WORK AS INDICATED ON THE DRAWINGS AND AS SPECIFIED, USING QUALIFIED JOURNEYMEN ELECTRICIANS.

1.3. INTENT

1.3.1. THE CONTRACTOR SHALL PROVIDE ALL LABOUR AND EQUIPMENT NECESSARY FOR THE COMPLETION OF THE WORK AS INDICATED ON THE DRAWINGS AND AS SPECIFIED, USING QUALIFIED JOURNEYMEN ELECTRICIANS.

1.3.2. IT IS THE INTENT OF THESE SPECIFICATIONS AND DRAWINGS TO PROVIDE FOR A COMPLETE AND FULLY OPERATING ELECTRICAL SYSTEM WITH FACILITIES AND SERVICES TO MEET THE OWNER'S REQUIREMENTS DESCRIBED HEREIN AND IN COMPLETE ACCORD WITH APPLICABLE CODES AND ORDINANCES. THE WORK TO BE DONE SHALL INCLUDE THE PROVISION OF ALL LABOUR, MATERIALS, TOOLS, AND EQUIPMENT, TESTING, AND PUTTING INTO OPERATION THE COMPLETE ELECTRICAL SYSTEM EXCEPT WHERE IT IS SPECIFICALLY MENTIONED THAT SUCH MATERIALS AND/OR LABOUR SHALL BE PROVIDED BY OTHERS.

1.4. DRAWINGS AND SPECIFICATIONS

1.4.1. THE DRAWINGS AND SPECIFICATIONS ARE TO COMPLEMENT ONE ANOTHER. ITEMS CALLED FOR OR SHOWN IN ONE SHALL BE INTERPRETED AS TO BE CALLED FOR IN BOTH. SHOULD A CONFLICT ARISE BETWEEN THE DRAWINGS AND THE SPECIFICATIONS, OR IF THE INTENT IS NOT CLEAR, A RULING IS TO BE OBTAINED FROM THE CONSULTANT BEFORE PROCEEDING WITH THE WORK.

1.4.2. THE DRAWINGS SHOW, BY MEANS OF SYMBOLS, THE LOCATION AND FUNCTION OF ELECTRICAL UTILIZATION DEVICES, OUTLETS, AND EQUIPMENT, TOGETHER WITH THE ELECTRICAL DISTRIBUTION AND WIRING SYSTEMS FOR SUPPLYING POWER TO THEM. THE DRAWINGS AND SPECIFICATIONS ARE NOT A SET OF DETAILED INSTALLATION INSTRUCTIONS BUT ARE PRIMARILY SCHEMATIC IN NATURE, AND A GUIDE TO ESTABLISHING QUALITY OF EQUIPMENT, MATERIALS, WORKMANSHIP, AND PERFORMANCE.

1.5. SITE VISITATION

1.5.1. BEFORE SUBMITTING TENDER, EXAMINE THE SITE, AND ALLOW FOR ALL EXISTING CONDITIONS AFFECTING THE WORK. INVESTIGATE AND ALLOW FOR THE COST OF PROVIDING ALL SERVICES REQUIRED UNDER THIS CONTRACT WITHOUT ANY ADDITIONAL CHARGES AFTER AWARD OF THE CONTRACT.

1.6. CODES AND STANDARDS

1.6.1. THE INSTALLATION SHALL COMPLY WITH THE CURRENT REQUIREMENTS OF THE ALBERTA BUILDING CODE, APPLICABLE CSA STANDARDS, THE CANADIAN ELECTRICAL CODE, THE SAFETY CODES ACT, UNDER WHICH THE C.E.C. IS ADOPTED, AND THE REQUIREMENTS OF THE LOCAL ELECTRICAL INSPECTION AUTHORITY.

1.6.2. SHOULD ANY INSTANCE OCCUR IN THIS SPECIFICATION OR ON THE DRAWINGS IN WHICH THE MATERIALS OR CONSTRUCTION METHODS CALLED FOR ARE LESS THAN THE MINIMUM REQUIREMENTS OF THE ABOVE CODES, THE REQUIREMENTS OF THE CODES SHALL TAKE PRECEDENCE, AND THE CONTRACTOR SHALL SUPPLY THE MATERIALS AND PERFORM THE WORK AS THOUGH CALLED FOR TO THE MINIMUM CODE STANDARDS.

1.6.3. AFOREMENTIONED MINIMUM STANDARDS SHALL NOT DETRACT FROM THE QUALITY OF MATERIALS OR METHODS OF INSTALLATION SHOWN WHERE THESE EXCEED SAID STANDARDS.

1.7. PERMITS AND CERTIFICATES

1.7.1. THE CONTRACTOR SHALL PAY FOR ALL FEES AND OBTAIN ALL PERMITS REQUIRED, AND AFTER COMPLETION OF THE WORK, SHALL FURNISH A CERTIFICATE OF FINAL INSPECTION AND APPROVAL FROM EACH INSPECTION AUTHORITY TO THE OWNER.

1.8. MATERIALS

1.8.1. MATERIALS AND EQUIPMENT FURNISHED BY THE CONTRACTOR SHALL BE NEW AND OF THE MINIMUM QUALITY SPECIFIED. WHERE EQUIPMENT OR MATERIALS ARE SPECIFIED BY TECHNICAL DESCRIPTION ONLY, WITHOUT REFERENCE TO TRADE NAME OR MANUFACTURER, THESE SHALL BE OF THE BEST COMMERCIAL QUALITY OBTAINABLE FOR THE PURPOSE FROM A CANADIAN MANUFACTURER WHO HAS BEEN CONTINUOUSLY ENGAGED IN BUSINESS FOR AT LEAST FIVE (5) YEARS.

1.8.2. WHERE EQUIPMENT OR MATERIALS ARE SPECIFIED BY MANUFACTURER'S OR TRADE NAME, THIS IS FOR THE PURPOSE OF ESTABLISHING A STANDARD OF QUALITY OF MATERIALS AND WORKMANSHIP TO WHICH THIS CONTRACTOR SHALL ADHERE, AND CONTRACTORS QUOTING ON MATERIALS OTHER THAN THOSE SPECIFIED OR APPROVED FOR SUBSTITUTION, DO SO AT THEIR OWN RISK. ANY MATERIALS OR EQUIPMENT INSTALLED WITHOUT PRIOR APPROVAL SHALL, IF SO DIRECTED, BE REMOVED AND REPLACED AT THE CONTRACTOR'S EXPENSE WITH APPROVED MATERIALS. MATERIALS AND EQUIPMENT OF ANY PARTICULAR TYPE OR CLASS OR FOR ANY PARTICULAR SERVICE SHALL BE BY ONE MANUFACTURER ONLY, AND THE CONTRACTOR SHALL NOT INDISCRIMINATELY MIX EQUIPMENT OF DIFFERENT MANUFACTURERS.

1.9. INSPECTIONS AND APPROVALS

1.9.1. THE CONTRACTOR IS RESPONSIBLE FOR OBTAINING ADDITIONAL COPIES OF THE DOCUMENTS AND SUBMITTING SAME TO THE AUTHORITIES HAVING JURISDICTION FOR THEIR APPROVAL. SUCH AUTHORITIES SHALL INCLUDE, BUT ARE NOT NECESSARILY LIMITED TO, THE FOLLOWING:

- 1.9.1.1. ELECTRICAL INSPECTION AUTHORITY
- 1.9.1.2. FIRE INSPECTION AUTHORITY
- 1.9.1.3. ELECTRICAL UTILITY
- 1.9.1.4. TELEPHONE AUTHORITY
- 1.9.1.5. CABLE TELEVISION AUTHORITY.

1.10. COORDINATION

1.10.1. TRADE DEFINITIONS SHALL BE AS PER ALBERTA CONSTRUCTION TENDERING SYSTEM (ACTS).

1.10.2. THE ELECTRICAL DRAWINGS DO NOT SHOW ALL THE ARCHITECTURAL AND STRUCTURAL DETAILS AND ANY INFORMATION INVOLVING CONSTRUCTION MATERIALS OR ACCURATE MEASUREMENTS SHALL BE OBTAINED AT THE SITE OR FROM THE ARCHITECTURAL AND STRUCTURAL DRAWINGS. THE ELECTRICAL CONTRACTOR SHALL FOLLOW THE ARCHITECTURAL, STRUCTURAL, AND MECHANICAL DRAWINGS FOR DETAILS AFFECTING HIS EQUIPMENT LOCATIONS AND ROUTING OF CONDUIT AND WIRE.

1.10.3. WITHOUT ANY ADDITIONAL CHARGE, THE ELECTRICAL CONTRACTOR SHALL MAKE ANY NECESSARY CHANGES OR ADDITIONS TO THE ELECTRICAL SYSTEM TO ACCOMMODATE STRUCTURAL AND MECHANICAL CONDITIONS AS BUILT. THE ARCHITECTURAL, STRUCTURAL, AND MECHANICAL DRAWINGS TAKE PRECEDENCE OVER THE ELECTRICAL DRAWINGS IN MATTERS OF FINAL LOCATIONS OF WALLS, DOORS, STRUCTURAL MEMBERS, EQUIPMENT, ETC.

1.10.4. WHERE ANY EQUIPMENT SUPPLIED BY THE CONTRACTOR MUST BE BUILT IN THE WORK OF OTHER CONTRACTORS SUCH AS MASONRY, CEILINGS, FINISHING, ETC., THIS CONTRACTOR SHALL BE RESPONSIBLE FOR SUPPLYING THE EQUIPMENT TO BE BUILT IN OR MEASUREMENTS TO ALLOW NECESSARY OPENINGS TO BE LEFT BY THE TRADES CONCERNED.

1.11. FIELD QUALITY CONTROL

1.11.1. BEFORE ENERGIZING THE ELECTRICAL SYSTEMS, PERFORM MEGGER TESTS ON ALL FEEDERS. RESULTS OF TESTS SHALL CONFORM TO THE REQUIREMENTS OF THE CANADIAN ELECTRICAL CODE AND SHALL BE TO THE SATISFACTION OF THE ELECTRICAL INSPECTION AUTHORITY AND THE OWNER'S REPRESENTATIVE.

1.11.2. UPON COMPLETION OF THE PROJECT AND IMMEDIATELY PRIOR TO FINAL INSPECTION AND TAKEOVER, CHECK LOAD BALANCE ON ALL FEEDERS AND AT DISTRIBUTION CENTRES, PANELS, ETC. CONDUCT TESTS BY TURNING ON ALL POSSIBLE LOADS AND CHECKING THE LOAD'S CURRENT BALANCE. IF LOAD UNBALANCE EXCEEDS 15% RECONNECT CIRCUITS TO BALANCE THE LOAD.

1.12. TEMPORARY USAGE

1.12.1. TEMPORARY OR TRIAL USAGE BY THE OWNER OR HIS REPRESENTATIVE OF ANY ELECTRICAL APPARATUS, EQUIPMENT, WORK, OR MATERIALS BEFORE FINAL COMPLETION AND WRITTEN ACCEPTANCE BY THE OWNER IS NOT TO BE CONSTRUED AS EVIDENCE OF ANY ACCEPTANCE OF THE SAME BY THE OWNER. THE OWNER SHALL HAVE THE PRIVILEGE OF TEMPORARY USAGE AS SOON AS THE ELECTRICAL CONTRACTOR DEEMS THE WORK TO BE SUFFICIENTLY ADVANCED FOR SUCH USAGE.

1.13. GUARANTEE

1.13.1. FURNISH A WRITTEN GUARANTEE STATING THAT ALL WORK EXECUTED UNDER THIS CONTRACT IS FREE FROM DEFECTS OF WORKMANSHIP AND FAULTY MATERIALS FOR A PERIOD OF ONE (1) YEAR FROM DATE OF FINAL ACCEPTANCE OF THIS WORK.

1.13.2. GUARANTEE THAT ALL DEFECTIVE WORK AS WELL AS OTHER WORK WHICH FAILS, BECOMES DEFECTIVE OR DAMAGED AS A RESULT, DURING THE TERM OF THE GUARANTEE, WILL BE REPAIRED AND REPLACED AT NO COST, PROVIDED THAT SUCH FAILURE IS NOT DUE TO IMPROPER USE.

1.14. EXISTING CONDITIONS

1.14.1. SINCE THE EXISTING BUILDING IS IN USE, ANY CHANGES TO THE EXISTING SYSTEM MUST BE MADE AT SUCH TIMES AS ARRANGED BY THE OWNER'S REPRESENTATIVE OR WHEN THE AREAS BEING RENOVATED ARE NOT IN USE SO THAT THERE WILL BE NO INTERFERENCE WITH THE OPERATION AND USE OF THE EXISTING FACILITIES.

1.14.2. EXISTING CONDUIT AND FITTINGS MAY BE REUSED PROVIDING THEY ARE FREE OF RUST, CORROSION, DENTS AND BRUISES, AND ARE NOT DEFORMED. EXISTING CONDUIT, WIRE, FITTINGS, AND EQUIPMENT THAT IS REMOVED AND IS SURPLUS TO THE PROJECT SHALL BE DISPOSED OF AT THE DIRECTION OF THE OWNER'S REPRESENTATIVE.

1.14.3. THE ELECTRICAL CONTRACTOR SHALL INCLUDE IN HIS TENDER THE COST OF ALL CUTTING AND PATCHING NECESSARY FOR THE EXECUTION OF THE ELECTRICAL WORK. THE ELECTRICAL CONTRACTOR SHALL RETAIN SUB–CONTRACTORS WHO ARE COMPETENT IN THEIR FIELDS TO PERFORM CUTTING AND PATCHING.

1.14.4. IN THE EXISTING BUILDING, IN AREAS BEING RENOVATED, ALL EXISTING ELECTRICAL SERVICES AND DEVICES SHALL BE RECONNECTED SO AS TO BE IN GOOD OPERATING CONDITION AFTER ALL RENOVATIONS AND ALTERATIONS ARE COMPLETE. IN ANY WALL OR PARTITION THAT IS BEING REMOVED, ALL WIRING AND ELECTRICAL DEVICES SHALL BE REMOVED FROM RACEWAYS AND BOXES AND THE RACEWAYS SHALL BE RECONNECTED OR REROUTED AS REQUIRED TO PROVIDE CONTINUITY TO OTHER AREAS AND NEW WIRING INSTALLED TO RESTORE THE SERVICES TO THESE AREAS.

1.14.5. DURING TENDER, THE CONTRACTOR SHALL EXAMINE ALL SYSTEMS, AND ENSURE THAT EXISTING FEEDERS AND BRANCH CIRCUIT WIRING THAT MUST BE REMOVED OR REROUTED TO ACCOMMODATE CONSTRUCTION ARE ACCOUNTED FOR IN TENDER PRICE.

1.14.6. WHERE CIRCUIT NUMBERS ARE NOT SHOWN FOR EXISTING FIXTURES, SWITCHES AND OTHER ELECTRICAL LOADS THAT ARE TO REMAIN, THESE SHALL BE RECONNECTED FROM EXISTING CIRCUIT WIRING.

1.14.7. CONTRACTOR SHALL NOTIFY THE CONSULTANT OF HAZARDOUS MATERIALS ENCOUNTERED, IF ANY.

1.14.8. DISPOSE OF HAZARDOUS MATERIALS IN ACCORDANCE WITH LEGISLATION IN EFFECT.

1.14.9. ALL EXISTING ITEMS WHICH ARE TO BE REMOVED OR DEMOLISHED ARE TO BE INSPECTED BY THE OWNER. IF OWNER WANTS THE REMOVED OR DEMOLISHED ITEMS, DELIVER THEM TO THE OWNER TO A DESIGNATED LOCATION. IF THE OWNER DOES NOT WANT THE REMOVED OR DEMOLISHED ITEMS, THEN THEY BECOME THE PROPERTY OF THE CONTRACTOR AND SHALL IMMEDIATELY BE REMOVED FROM SITE.

1.15. CARE, OPERATION AND START–UP

1.15.1. INSTRUCT OPERATING PERSONNEL IN THE OPERATION, CARE AND MAINTENANCE OF ELECTRICAL EQUIPMENT.

1.15.2. ARRANGE AND PAY FOR SERVICES OF MANUFACTURER'S FACTORY SERVICE CONSULTANT TO SUPERVISE START–UP OF INSTALLATION, CHECK, ADJUST, BALANCE, AND CALIBRATE COMPONENTS.

1.16. RECORD DRAWINGS

1.16.1. OBTAIN AND PAY FOR AN EXTRA SET OF WHITE PRINTS, AND AS THE WORK PROGRESSES, CLEARLY AND ACCURATELY RECORD IN RED INK, ON THIS SET OF PRINTS, ALL CHANGES AND DEVIATIONS TO THE CONDUIT RUNS OR EQUIPMENT LOCATIONS FROM THAT SHOWN ON THE ORIGINAL DRAWINGS. SUBMIT THE COMPLETED RECORD DRAWINGS TO THE CONSULTANT WITHIN THIRTY (30) DAYS OF THE FINAL COMPLETION DATE FOR THE PROJECT.

1.16.2. RECORD DRAWINGS SHALL BE KEPT CURRENT ON A DAY–TO–DAY BASIS AND SHALL BE ACCESSIBLE TO THE CONSULTANT'S REPRESENTATIVES AT ALL TIMES.

1.16.3. ALLOW A CASH ALLOWANCE OF $750.00 TO PAY FOR THE CONSULTANT TO UPDATE THE CAD DATABASE AND PRODUCE THE AS–BUILT DRAWINGS.

1.17. SHOP DRAWINGS

1.17.1. WITHIN THIRTY (30) DAYS OF THE AWARD OF THE CONTRACT, PREPARE OR OBTAIN EQUIPMENT SHOP DRAWINGS FOR EACH MAJOR PIECE OF EQUIPMENT. THE DRAWINGS SHALL SHOW CONSTRUCTION AND FABRICATION DETAILS, WEIGHTS, OUTLINE DIMENSIONS, PERFORMANCE CHARACTERISTICS, RATINGS, SCHEMATIC AND CONNECTION DIAGRAMS OF EQUIPMENT BEING PURCHASED. REVIEW AND VERIFY ALL DIMENSIONS AND RATINGS AND, WHERE NECESSARY, ALTER THESE SHOP DRAWINGS IN ORDER TO HAVE THE EQUIPMENT COMPLY WITH THE INTENT OF THE SPECIFICATION AND DRAWINGS.

1.17.2. INCLUDE MANUFACTURER'S CATALOGUE CUTS AND PHOTOMETRIC DATA FOR LIGHTING FIXTURES.

1.17.3. ALL DRAWINGS LARGER THAN 8–1/2 IN. X 14 IN. SUBMITTED SHALL BE REPRODUCIBLE TRANSPARENCIES (NO EXCEPTION) AND SHALL BE ACCOMPANIED BY TWO (2) ADDITIONAL PRINTS OF SAME.

1.17.4. THE REVIEW OF SHOP DRAWINGS AND TECHNICAL DATA WILL BE FOR GENERAL DESIGN ONLY AND WILL NOT RELIEVE THE CONTRACTOR FROM RESPONSIBILITY FOR THEIR ACCURACY. INADVERTENT APPROVAL OF SHOP DRAWINGS OR TECHNICAL DATA THAT ARE INCOMPLETE IN DETAIL OR THAT CONTAIN ORIGINAL ERRORS IN TECHNICAL DATA OR SIZES OF EQUIPMENT THAT DO NOT FIT THE SPACE AVAILABLE SHALL NOT BE CONSTRUED AS APPROVING DEPARTURE FROM REQUIREMENTS OF THE DRAWINGS OR SPECIFICATIONS.

1.18. OPERATING AND MAINTENANCE MANUALS

1.18.1. NOT LESS THAN THIRTY (30) DAYS PRIOR TO ACCEPTANCE OF THE PROJECT, FURNISH ELECTRICAL SYSTEM OPERATING MANUALS AS FURTHER DEFINED HEREIN.

1.18.2. EACH SYSTEM AND PIECE OF EQUIPMENT REQUIRING ADJUSTMENT OR MAINTENANCE OR WHOSE OPERATION IS NOT READILY APPARENT TO UNSKILLED USERS AND EACH SYSTEM REQUESTED BY THE OWNER SHALL BE COVERED BY A SEPARATE DIVISION IN THE MANUAL. EACH DIVISION SHALL BE SUBDIVIDED INTO APPLICABLE SECTIONS AND SHALL BE SEPARATELY TABBED OR INDEXED. IDENTIFICATION NUMBERS SHALL BE USED FOR EACH PIECE OF EQUIPMENT; THESE SHALL BE IDENTICAL TO THOSE USED ON THE SHOP DRAWINGS AND SPECIFICATION.

1.18.3. THE MANUALS ARE TO BE COMPLETE WITH THE FOLLOWING:

- 1.18.3.1. NAME OF SYSTEM OR EQUIPMENT AND MANUFACTURER;
- 1.18.3.2. NAME, ADDRESS, AND TELEPHONE NUMBER OF NEAREST SERVICE AND PARTS SUPPLIER;
- 1.18.3.3. FUNCTIONAL DESCRIPTION OF THE SYSTEM OR EQUIPMENT;
- 1.18.3.4. OPERATING INSTRUCTIONS;
- 1.18.3.5. MAINTENANCE INSTRUCTIONS;
- 1.18.3.6. TROUBLE–SHOOTING GUIDE;
- 1.18.3.7. APPROVED SHOP DRAWINGS.

1.18.4. PROVIDE TWO (2) THREE–RING CATALOGUE BINDERS BOUND WITH YELLOW VINYL, LETTERING FRONT AND SPINE. TITLE AS FOLLOWS:

(OPERATING AND MAINTENANCE MANUALS)
FOR
(PROJECT NAME AND LOCATION)
ELECTRICAL SYSTEM
(PRIME CONSULTANT)
(ELECTRICAL CONSULTANT)
(ELECTRICAL CONTRACTOR)
(DATE)

2. PART 2 – PRODUCTS

2.1. OUTLET AND JUNCTION BOXES

2.1.1. OUTLET AND JUNCTION BOXES SHALL BE SIZED IN ACCORDANCE WITH C.E.C. REQUIREMENTS FOR THEIR INTENDED USE OR FUNCTION.

2.2. RACEWAYS

2.2.1. RACEWAYS INSTALLED IN DIRECT CONTACT WITH EARTH SHALL BE RIGID PVC TYPE. RACEWAYS INSTALLED IN CONCRETE SLABS SHALL BE PVC OR ELECTRICAL NON–METALLIC TUBING (ENT). SUCH RACEWAYS SHALL CONTAIN A SEPARATE GROUND CONDUCTOR IN ADDITION TO THE BRANCH CIRCUIT CONDUCTORS REQUIRED.

2.2.2. ELECTRICAL METALLIC TUBING (EMT) MAY BE USED IN ALL AREAS PERMITTED BY THE C.E.C. EXCEPT AS SPECIFICALLY NOTED OTHERWISE IN THE SPECIFICATION OR ON THE DRAWINGS.

2.2.3. EXPOSED RACEWAYS IN FINISHED AREAS SHALL BE WIREMOLD RACEWAY; EXPOSED CONDUIT IS ACCEPTABLE ONLY IN UNFINISHED AREAS.

2.2.4. FLEXIBLE CONDUIT SHALL NOT BE USED EXCEPT FOR FINAL CONNECTIONS TO MOTORS, MOTOR DRIVEN EQUIPMENT, EQUIPMENT MOUNTED CONTROL DEVICES AND RECESSED LIGHTING FIXTURES. EXPOSED FLEXIBLE CONDUIT SHALL BE THE PLASTIC JACKETED TYPE.

2.2.5. ALL EXPOSED LOCATIONS SUBJECT TO MECHANICAL DAMAGE, RACEWAYS SHALL BE THREADED RIGID STEEL CONDUIT, HOT DIP GALVANIZED.

2.2.6. WIRE LASHING OR PERFORATED STRAP SHALL NOT BE USED TO SUPPORT RACEWAYS.

2.3. CONDUCTORS

2.3.1. CONDUCTORS SHALL BE MINIMUM NO. 12 AWG 98 PERCENT CONDUCTIVITY COPPER RATED AT 600V WITH XLPE TYPE RW90 RATING INSULATION.

2.3.2. WERE A COMMON NEUTRAL IS USED, PHASE CONDUCTORS SHALL BE CONNECTED TO BREAKERS IN THE PANELS THAT ARE ATTACHED TO OPPOSITE PHASE BUS BARS IN ORDER TO ENSURE THAT THE NEUTRAL CONDUCTOR WILL CARRY ONLY THE UNBALANCED CURRENT.

2.3.3. NEUTRAL CONDUCTORS SHALL BE THE SAME SIZE AS PHASE CONDUCTORS

2.4. PANELBOARDS

2.4.1. BRANCH CIRCUIT PANELBOARDS SHALL BE BOLT ON CIRCUIT BREAKER TYPE WITH ADJUSTABLE TRIM, HINGED DOOR WITH CONCEALED HINGES. BUSSES SHALL BE ALUMINUM, RATED TO AT LEAST THE CURRENT CARRYING CAPACITY OF THE FEEDER CONDUCTORS. PANELBOARDS SHALL CONFORM TO CSA C22.2 NO. 29.

2.4.2. BREAKERS SHALL BE ARRANGED SO THAT ANY TWO SINGLE POLE BREAKERS VERTICALLY ADJACENT ARE CONNECTED TO DIFFERENT PHASES WITH ODD NUMBERED BREAKERS ON THE LEFT AND EVEN NUMBERS ON THE RIGHT.

2.5. PANEL DIRECTORIES

2.5.1. PANEL DIRECTORIES SHALL BE TYPEWRITTEN, AND INDICATE TYPE AND LOCATION OF LOAD CONTROLLED.

2.5.2. UPDATE PANEL DIRECTORIES IN PANELS WHERE NEW CIRCUIT BREAKERS ARE BEING ADDED OR REMOVED.

2.6. CIRCUIT BREAKERS

2.6.1. CIRCUIT BREAKERS SHALL BE QUICK–MAKE, QUICK–BREAK MOULDED COMPOSITION CASE TYPE WITH BOTH THERMAL AND MAGNETIC TRIP AND TRIP–FREE ON OVERLOAD.

2.6.2. WAFER OR DUPLEX TYPE CIRCUIT BREAKERS ARE NOT PERMITTED UNLESS APPROVED BY THE CONSULTANT.

2.7. SAFETY SWITCHES AND FUSES

2.7.1. THREE PHASE DISCONNECT SWITCHES SHALL BE 4 POLE FUSIBLE TYPE (3 POLE NON–FUSIBLE TYPE FOR MOTORS), WEATHERPROOF AS INDICATED AND AS REQUIRED. FUSIBLE TYPE DISCONNECT SWITCHES SHALL BE COMPLETE WITH HRC FUSES, SIZED AS SHOWN ON DRAWINGS. PROVIDE DISCONNECTS AS INDICATED AND AS REQUIRED BY C.E.C.

2.8. FIRE ALARM SYSTEM

2.8.1. ALL WORK AND MATERIALS SHALL COMPLY WITH THE REQUIREMENTS OF THE ALBERTA BUILDING CODE, APPROPRIATE NFPA STANDARDS, THE CANADIAN ELECTRICAL CODE, AND NATIONAL STANDARD OF CANADA CAN/ULC–S524–06.

2.8.2. FIRE ALARM SYSTEM

- 2.8.2.1. EXISTING.

2.8.3. SMOKE DETECTORS SHALL OPERATE ON THE IONIZATION PRINCIPLE AND SHALL BE ACTIVATED BY THE PRESENCE OF COMBUSTION GASES AND SHALL COMPLY WITH CAN/ULC–S529–02. DUCT TYPE SMOKE DETECTORS SHALL ALSO BE ENCLOSED IN SURFACE MOUNTED HOUSING WITH 12mm (1/2") PERFORATED SAMPLING TUBE AND 12mm (1/2") EXHAUST TUBE.

2.9. MOTOR STARTERS

2.9.1. SINGLE PHASE MANUAL MOTOR STARTERS OF SIZE, TYPE, RATING, AND ENCLOSURE TYPE AS INDICATED WITH COMPONENTS AS FOLLOWS:

- 2.9.1.1. SWITCHING MECHANISM, QUICK MAKE AND BREAK.
- 2.9.1.2. SWITCH: STANDARD DUTY, LABELLED AS INDICATED.
- 2.9.1.3. INDICATING LIGHT: NOT USED.
- 2.9.1.4. LOCKING TAB TO PERMIT PADLOCKING ON "ON" OR "OFF"

2.9.2. MAGNETIC AND COMBINATION MAGNETIC STARTERS OF SIZE, TYPE, RATING AND ENCLOSURE TYPE AS INDICATED WITH COMPONENTS AS FOLLOWS:

3. PART 3 – EXECUTION

3.1. GENERAL

3.1.1. EXECUTE ALL WORK IN A WORKMANLIKE MANNER SO AS TO PRESENT A NEAT AND FINISHED APPEARANCE WHEN COMPLETED. KEEP A COMPETENT FOREMAN AND NECESSARY JOURNEYMAN AND APPRENTICES ON THE JOB DURING THE PROGRESS OF THE WORK.

3.1.2. WHERE LOCATIONS OF FIXTURES AND DEVICES IS DEPENDENT ON EQUIPMENT BEING INSTALLED BY OTHER TRADES, CONFIRM THE LOCATION OF SUCH FIXTURES AND DEVICES AND CONDUIT STUB–UPS WITH THE TRADE CONCERNED BEFORE INSTALLATION.

3.1.3. EXCEPT WHERE SPECIFICALLY NOTED, ALL WIRING IN FINISHED AREAS SHALL BE INSTALLED CONCEALED. WHERE WIRING IS INSTALLED EXPOSED, THE RUNS SHALL BE MADE PARALLEL TO THE BUILDING LINES, AND WHERE BENDS IN CONDUIT OCCUR IN PARALLEL RUNS, THEY SHALL BE CONCENTRIC. WHERE WIRING IS NOT SHOWN ON THE DRAWINGS OR IS ONLY SHOWN DIAGRAMMATICALLY, IT SHALL BE INSTALLED SO AS TO CONSERVE HEADROOM AND ALLOW BEST USAGE OF THE SPACE.

3.2. IDENTIFICATION

3.2.1. AT DISTRIBUTION CENTRES, SWITCHES, CABINETS, AND PANELBOARDS IDENTIFY ON THE OUTSIDE NEAR THE TOP TO INDICATE THEIR FUNCTION. AT DISTRIBUTION CENTRES, EACH CIRCUIT PROTECTIVE DEVICE SHALL BE INDIVIDUALLY IDENTIFIED AS TO ITS FUNCTION. IDENTIFICATION NAMEPLATES SHALL BE BLACK LAMICOID WITH ENGRAVED WHITE LETTERING. ALL NAMEPLATES SHALL BE FASTENED BY RIVETS OR THREADED FASTENERS AND NOT FASTENED BY GLUE ALONE.

3.3. GROUNDING AND BONDING

3.3.1. GROUNDING AND BONDING SHALL IN COMPLIANCE WITH C.E.C. AND CSA C22.2 NO. 41 REQUIREMENTS. ENSURE GROUNDING CONTINUITY TO ALL NON–CURRENT CARRYING METAL COMPONENTS OF THE SYSTEM. CONDUCTOR SIZING AND METHODS TO OBTAIN ELECTRICAL CONTINUITY AND EFFECTIVE GROUNDING SHALL BE AS REQUIRED BY SECTION 10 OF THE C.E.C.

3.3.2. ALL GROUNDING CONDUCTORS SHALL BE GREEN IN COLOUR OR BE IDENTIFIED BY GREEN TAPING. PAINTING OF CONDUCTORS WILL NOT BE ALLOWED.

3.4. WIRING FOR OTHER TRADES

3.4.1. PROVIDE CONNECTION TO ALL MOTORS AND SPECIAL EQUIPMENT AS INDICATED ON THE DRAWINGS, SPECIFICATIONS AND SCHEDULES. EXAMINE THE DRAWINGS AND SPECIFICATIONS OF OTHER TRADES AND ALLOW FOR CONNECTION OF ALL EQUIPMENT REQUIRING ELECTRICAL HOOK–UP. CONFIRM ALL ELECTRICAL CONNECTIONS, LOADS, AND EXACT LOCATIONS WITH SUPPLIER AND INSTALLER PRIOR TO ROUGH–IN.

3.4.2. PROVIDE CONTACTORS AS REQUIRED, OPERATED BY BUILT–IN MOTOR THERMAL PROTECTION DEVICES (THERMISTORS), FOR MOTORS INCORPORATING THIS TYPE OF OVERLOAD PROTECTION.

3.5. INSTALLATION AND TESTING OF FIRE ALARM SYSTEMS

3.5.1. LOCATE AND INSTALL DUCT SMOKE DETECTOR(S) AS INDICATED, AND CONNECT TO ALARM CIRCUIT WIRING. DETECTORS SHALL BE MOUNTED A MINIMUM OF 600mm (24") FROM AIR OUTLETS, WALLS, BULKHEADS, AND OTHER VERTICAL PROJECTIONS, AND 900mm (36") FROM SUPPLY AIR DIFFUSERS. COORDINATE WITH OTHER TRADES. INSTALL WIRE GUARDS WHERE DIRECTED TO PREVENT MECHANICAL DAMAGE TO DEVICE.

3.5.2. INSTALL END–OF–LINE DEVICES AT END OF ALARM AND SIGNALLING CIRCUITS, WALL MOUNTED IN A VISIBLE LOCATION AT 1500mm (5'–0") AS REQUIRED.

3.5.3. INSTALL ALL FIRE ALARM WIRING IN METALLIC CONDUIT. USE FLEXIBLE METAL CONDUIT FOR DROPS TO CEILING MOUNTED DEVICES.

3.5.4. WIRING METHODS SHALL BE IN ACCORDANCE WITH C.E.C. SECTION 32. STRANDED WIRE SHALL BE TERMINATED ON SCREWS USING SPADE LUGS.

3.5.5. WIRING TO INITIATING DEVICES SHALL BE MULTI–CONDUCTOR FIRE ALARM SIGNAL CABLE, FAS 105, NO. 18 AWG, CONFORMING TO CSA C22.2 NO. 208, NUMBER OF CONDUCTORS AS REQUIRED.

3.5.6. WIRING TO SIGNAL AND ANCILLARY DEVICES SHALL BE MINIMUM NO. 14 AWG RW90 XLPE AND AS PER MANUFACTURER'S RECOMMENDATIONS (AS REQUIRED).

3.5.7. RETAIN THE MANUFACTURER'S REPRESENTATIVE TO MAKE AN INSPECTION OF THE FIRE ALARM SYSTEM AND EQUIPMENT, INCLUDING THOSE COMPONENTS NECESSARY FOR THE DIRECT OPERATION OF THE SYSTEM SUCH AS MANUAL STATIONS, DETECTORS, AND CONTROLS PRIOR TO THE VERIFICATION.

3.6. FIRE ALARM VERIFICATION

3.6.1. A VERIFYING CONSULTING ENGINEER, APPOINTED BY THE OWNER OR THE ELECTRICAL DESIGN ENGINEER, WILL BE RESPONSIBLE FOR WITNESSING PERFORMANCE VERIFICATION OF THE FIRE ALARM SYSTEM IN ACCORDANCE WITH CAN/ULC–S537–04.

3.6.2. PRIOR TO REQUESTING PERFORMANCE VERIFICATION, ENSURE THAT FIRE ALARM SYSTEM IS FULLY OPERABLE AND THAT SUBSEQUENT WORK TO BE PERFORMED ON SYSTEM WILL NOT INVALIDATE EXAMINATIONS AND TESTS PERFORMED DURING VERIFICATION PROCEDURE.

3.6.3. ASSIST AND COOPERATE WITH VERIFYING CONSULTANT IN VERIFICATION PROCEDURE. PROVIDE AND PAY FOR VELOMETER, SMOKE GENERATOR, HEAT GENERATOR PORTABLE COMMUNICATION DEVICES, AND ANY OTHER TOOLS AND EQUIPMENT REQUIRED TO PERFORM THE VERIFICATION. DISASSEMBLE AND RECONNECT SYSTEM COMPONENTS, DISCONNECT AND RECONNECT WIRING, PERFORM REQUIRED FIELD ADJUSTMENTS, REPAIR DEFECTIVE WORK, REPLACE DEFECTIVE COMPONENTS, AND PERFORM ALL OTHER WORK ON SYSTEM AS REQUIRED BY VERIFICATION PROCEDURE.

3.6.4. THE VERIFYING CONSULTANT, THE ELECTRICAL SUBCONTRACTOR, AND THE FIRE ALARM MANUFACTURER'S REPRESENTATIVE SHALL ALL BE PRESENT AT ALL TIMES DURING THE VERIFICATION PROCEDURE.

3.6.5. COMPONENTS TO BE VERIFIED TO INCLUDE, BUT NOT NECESSARILY BE LIMITED TO, NEW DEVICES, DEVICES IMMEDIATELY UPSTREAM AND DOWNSTREAM FROM NEW DEVICES AND END–OF–LINE DEVICES FOR APPROPRIATE ZONES.

3.6.6. PAYMENT FOR THE VERIFYING CONSULTANT SHALL BE CARRIED IN A CASH ALLOWANCE BY THIS CONTRACTOR IN THE AMOUNT OF $1,200.00.

TRUE NORTH
PROJECT NORTH

notes

no.	date	revision
A	15–11–13	ISSUED FOR TENDER

consultant

MCW Hemisphere Ltd.
CONSULTING ENGINEERS
* EDMONTON * CALGARY *
#202, 838 11 Avenue SW, Calgary, Alberta, T2R 0E5
TEL (403) 245-6446 FAX (403) 244-0191
MCW# C15005

permit

north

seal

PROFESSIONAL ENGINEER ALBERTA
HENRY P. DOORNBERG
13-NOV-15
MCW Hemisphere Ltd.
Permit Number: P13022

project
BEAVER STREET
APPARTMENTS – BANFF
MAKE–UP AIR ADDITION
CALGARY ALBERTA

title
SPECIFICATIONS

date	drawn by	scale
2015–11–13		AS NOTED
checked by	**approved by**	**project no.**
		C15005
revision	**drawing no.**	
A	E3.0	

Login: BMoro C:\Users\BMoro\Desktop\SPECIFICATIONS.dwg Nov 13, 2015 – 4:23pm

Appendix C

Structural Drawings

and

Technical Specifications

GENERAL

1. THE CONTRACTOR SHALL EXAMINE ALL CONTRACT DOCUMENTS, CHECK DIMENSIONS AND REPORT ANY DISCREPANCIES TO THE ENGINEER FOR CLARIFICATION PRIOR TO COMMENCING CONSTRUCTION. DISCREPANCIES NOT REPORTED ARE THE RESPONSIBILITY OF THE CONTRACTOR. CHECK AND VERIFY ALL DIMENSIONS WITH THE ARCHITECTURAL DRAWINGS BEFORE COMMENCING WITH ANY WORK. NOTIFY THE ARCHITECT OF ANY ERRORS OR OMISSIONS.

2. READ STRUCTURAL DRAWINGS IN CONJUNCTION WITH THE MECHANICAL AND ELECTRICAL DRAWINGS.

3. TEMPORARY SUPPORT AND TEMPORARY AND PERMANENT BRACING OF LOAD BEARING AND NON-LOAD BEARING ELEMENTS DURING CONSTRUCTION TO RESIST DEAD, LIVE AND CONSTRUCTION LOADS IS THE RESPONSIBILITY OF THE CONTRACTOR. DESIGN OF THE TEMPORARY SUPPORTS IS THE RESPONSIBILITY OF THE CONTRACTOR.

4. DO NOT CONSTRUCT FROM THESE DRAWINGS UNLESS MARKED "ISSUED FOR CONSTRUCTION".

5. THE GENERAL CONTRACTOR SHALL PROVIDE SHOP DRAWINGS FOR REVIEW BY THE ENGINEER OF RECORD. ALLOW ADEQUATE TIME FOR REVIEW BY THE ENGINEER OF RECORD PRIOR TO FABRICATION OR ERECTION. SHOP DRAWINGS SHALL BE REVIEWED BY THE GENERAL CONTRACTOR PRIOR TO SUBMISSION FOR REVIEW BY THE ENGINEER OF RECORD. SHOP DRAWINGS SHALL BE SEALED BY A PROFESSIONAL ENGINEER REGISTERED IN THE PROJECT PROVINCE OR STATE OF JURISDICTION. THE SHOP DRAWING ENGINEER SHALL ENSURE THAT THE FABRICATION AND ERECTION OF THESE ELEMENTS ARE IN ACCORDANCE WITH THEIR DESIGN AND THAT THE DESIGN IS IN ACCORDANCE WITH ALL RELEVANT CODES AND REGULATIONS. SHOP DRAWINGS SHALL BE SUPPLIED FOR REVIEW FOR THE FOLLOWING BUT NOT LIMITED TO:
   * TIMBER
   * ENGINEERED WOOD PRODUCTS

6. ALL DESIGN TO CONFORM TO THE ABC 2014, AND ALL OTHER APPLICABLE CODES AND PRACTICES AND BEST PRACTICES.

7. FIELD REVIEWS:
   NOTIFY THE ENGINEER 48 HOURS IN ADVANCE FOR FIELD REVIEWS AND APPROVAL OF THE FOLLOWING:
   * CONCRETE REINFORCEMENT — BEFORE EACH CONCRETE POUR
   * WOOD FRAMING — BEFORE COVERING UP

8. DO NOT SCALE FROM THESE DRAWINGS.

9. THE DESIGN HAS BEEN PREPARED BASED ON THE ASSUMPTION THAT THE OWNER AND/OR OPERATOR HAS A SITE SAFETY PLAN IN PLACE TO ADDRESS AND MITIGATE SAFETY HAZARDS, BOTH COMMON AND SPECIFIC TO THIS PROJECT

DRAWING LIST

ABBREVIATIONS

AIFB	ASPHALT IMPREGNATED FIBRE BOARD
ALT.	ALTERNATE
ARCH.	ARCHITECTURAL
B.C.E.	BOTTOM CHORD EXTENSION
BLL	BOTTOM LOWER LAYER
BUL	BOTTOM UPPER LAYER
BM.	BEAM
BOT.	BOTTOM
BPO	BAR PLACING ORDER
BTWN	BETWEEN
BRG.	BEARING
CANT.	CANTILEVER
C.J.	CONTROL JOINT
CL.	CENTER LINE
CLR.	CLEAR
COL.	COLUMN
CONC.	CONCRETE
CONT.	CONTINUOUS
C.P.	COMPLETE PENETRATION
C/W	COMPLETE WITH
DET	DETAIL
D.L.	DEAD LOAD
D.O.	DO OVER (DITTO)
DP.	DEEP
DWG.	DRAWING
DWLS	DOWELS
E.E.	EACH END
E.F.	EACH FACE
ELEC.	ELECTRICAL
EL.	ELEVATION
ELEV.	ELEVATION
E.S.	EACH SIDE
E.W.	EACH WAY
EXIST.	EXISTING
EX	EXTRA
EXT.	EXTERIOR
F.D.	FLOOR DRAIN
F.S.	FAR SIDE
FTG	FOOTING
GALV.	GALVANIZED
G.L.	GRID LINE
H.1.E.	HOOK ONE END
H.2.E.	HOOK 2 ENDS
H.D.G.	HOT DIPPED GALVANIZED
HOR.	HORIZONTAL
HORIZ.	HORIZONTAL
I.F.	INSIDE FACE
INT.	INTERIOR
JT.	JOINT
LG.	LONG
L.L.	LIVE LOAD
LLH	LONG LEG HORIZONTAL
LLV	LONG LEG VERTICAL
LSH	LONG SIDE HORIZONTAL
LSV	LONG SIDE VERTICAL
L.V.	LENGTH VARIES
L.W.	LONG WAY
MAX.	MAXIMUM
MECH.	MECHANICAL
MIN.	MINIMUM
N.I.C.	NOT IN CONTRACT
N.S.	NEAR SIDE
N.T.S.	NOT TO SCALE
O/C	ON CENTRE
O.F.	OUTSIDE FACE
OPP.	OPPOSITE
OWSJ	OPEN WEB STEEL JOIST
PLA	POINT LOAD ABOVE
P/T	PRESSURE TREATED
R.D.	ROOF DRAIN
REINF.	REINFORCING
R/W	REINFORCED WITH
S.D.L.	SUPERIMPOSED DEAD LOAD
SIM.	SIMILAR
S.O.G.	SLAB ON GRADE
STAG.	STAGGERED
STIR.	STIRRUP
S.W.	SHORT WAY
TEMP.	TEMPERATURE REINFORCING
THK.	THICK
THRU	THROUGH
T.J.	TIE JOIST
TLL	TOP LOWER LAYER
T.O.	TOP OF
T.O.C.	TOP OF CONCRETE
T.O.S.	TOP OF STEEL/SLAB
TUL	TOP UPPER LAYER
TYP.	TYPICAL
T & B	TOP AND BOTTOM
T & G	TONGUE AND GROOVE
U.N.O.	UNLESS NOTED OTHERWISE
U/S	UNDERSIDE
VERT.	VERTICAL
WT.	WALL THICKNESS
W.P.	WORK POINT

ISL Engineering and Land Services

Calgary Office 403 254-9186
#1, 6325 - 12 St SE, Calgary, AB T2H 2K1

P.Eng. Permit

No.	DESCRIPTION	BY	DATE
2	ISSUED FOR TENDER	AW	2015.11.13
1	ISSUED FOR REVIEW	AW	2015.09.28

REVISIONS

Project

117 BEAVER STREET

117 BEAVER STREET, CALGARY ALBERTA

Title

GENERAL NOTES

Scale	AS NOTED	Revision No.	1
Project No.	60861		
Drawn:	TN	Drawing No.	S1.0
Designed:	TH Date DATE		
Design Checked:	AW		
Discipline Review:	AW Date DATE		

File Path

MATERIAL SPECIFICATIONS

WOOD: TO CONFORM WITH CSA/CAN 086.09 ENGINEERING DESIGN IN WOOD (LIMIT STATES DESIGN)

EWP DESIGN PROPERTIES

1. LAMINATED VENEER LUMBER (LVL)

E	=13100	MPa	
Fb	=18	MPa	
Fv	=2	MPa	
Fc	=5.2	MPa	(PERPENDICULAR)
Fc	=17.3	MPa	(PARALLEL)

2. PARALLEL STRAND LUMBER(PSL)

E	=2000	ksi	
Fb	=2900	psi	
Fv	=290	psi	
Fc	=750	psi	(PERPENDICULAR)
Fc	=2900	psi	(PARALLEL)

FRAMING GRADES AND TYPES TO BE AS FOLLOWS, UNLESS NOTED OTHERWISE:

1. BEAMS & MULTI-PLY BEAMS, AND PLYWOOD WEB JOISTS:
   TJI, MICROLAM AND/OR PARALLAM BY TRUS-JOIST MACMILLAN LTD. OR APPROVED EQUAL.
2. WOOD BASED SHEATHING:
   ORIENTED STRANDBOARD TO CAN-0473.0-93 GRADE 0-2.
   PLYWOOD TO CSA 0325-07
3. STRUCTURAL JOISTS & PLANKS:
   SPF #2 OR BETTER.
4. STRUCTURAL LIGHT FRAMING:
   SPF #2 OR BETTER.
5. WOOD POSTS & BUILT UP COLUMNS:
   SPF #2 OR BETTER.

DESIGN DATA

DESIGN CODE : (ABC 2014)

IMPORTANCE FACTOR (Is) = 1

MAIN ROOF

DEAD LOADS:

ROOFING , FRAMING & INSULATION	0.47 kPa
CEILING, MECHANICAL & ELECTRICAL	0.25 kPa
TOTAL DEAD LOADS	0.72 kPa

ENVIRONMENTAL LOADS:

DESIGN SNOW LOAD (Ss)	3.60 kPa
RAIN LOAD (Sr)	0.10 kPa
Cb = 0.8	

WIND LOAD DATA: HOURLY WIND PRESSURE (1/50) 0.32 kPa

SEISMIC DATA:
Sa(0.2) = 0.24
Sa(0.5) = 0.14
Sa(1.0) = 0.066
Sa(2.0) = 0.037
PGA = 0.12

DESIGN DEFLECTION LIMITS:

* ROOF FRAMING
  LIVE LOAD: LL=L/360
  TOTAL LOAD: TL=L/240

ROUGH CARPENTRY

1. WOOD FRAMING TO CONFORM TO NLGA STANDARD GRADING RULES FOR CANADIAN LUMBER AND CSA 086-09 ENGINEERING DESIGN IN WOOD (LIMIT STATES DESIGN)
2. THE ROOF SHEATHING AND SUPPORTING ROOF MEMBERS HAVE BEEN DESIGNED AS A DIAPHRAGM. DIAPHRAGM CONNECTION REQUIREMENTS FOR THE ROOF SHEATHING ARE: 2 1/2" LONG COMMON NAILS @ 6" O/C AT SUPPORTED PANEL EDGE AND AT 12" O/C ALONG INTERMEDIATE FRAMING MEMBERS.
3. THE WALL SHEATHING AND SUPPORTING MEMBERS HAVE BEEN DESIGNED AS SHEAR WALLS. SHEAR WALL CONNECTION REQUIREMENTS FOR THE WALL SHEATHING ARE: 2 1/2" LONG COMMON NAILS @ 6" O/C AT SUPPORTED PANEL EDGE AND AT 12" O/C ALONG INTERMEDIATE FRAMING MEMBERS.
4. WIRE NAILS, SPIKES AND STAPLES TO CSA 19111-1974.
5. ALL FRAMED EXTERIOR WALLS TO BE 2x6 OR 2x8 @ 16"(400mm) O/C PER ARCH. U.N.O. ON PLANS.
6. ALL FRAMED INTERIOR WALLS TO BE 2x4 OR 2x6 @ 16" (400mm) O/C PER ARCHITECTURAL U.N.O. ON PLANS.

ISL Engineering and Land Services
Calgary Office 403 254-9186
#1, 6325 - 12 St SE, Calgary, AB T2H 2K1

P.Eng. Permit

No.	DESCRIPTION	BY	DATE
2	ISSUED FOR TENDER	AW	2015.11.13
1	ISSUED FOR REVIEW	AW	2015.09.28

REVISIONS

Project
117 BEAVER STREET
117 BEAVER STREET, CALGARY ALBERTA

Title
GENERAL NOTES

Scale	AS NOTED	Revision No.	1
Project No.	60861		
Drawn:	TN	Drawing No.	S1.1
Designed:	TH Date DATE		
Design Checked:	AW		
Discipline Review:	AW Date DATE		

File Path

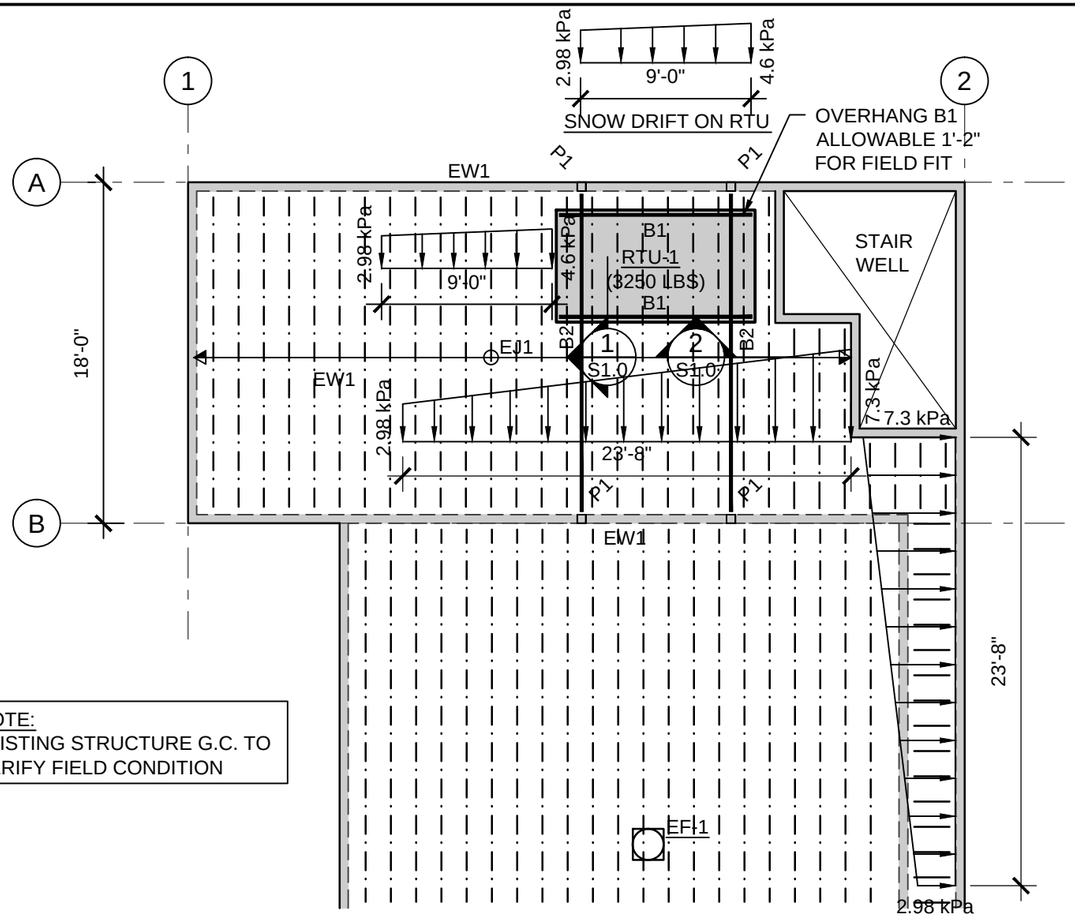

NOTE:
EXISTING STRUCTURE G.C. TO VERIFY FIELD CONDITION

- / S2.0 ROOF FRAMING PLAN
1/8" = 1'-0"

WALL SCHEDULE	
TYPE	DESCRIPTION
EW1	EXISTING LOAD BEARING WALL 2x6 @16" O/C

JOIST SCHEDULE	
TYPE	DESCRIPTION
EJ1	EXISTING JOIST 2x10 @ 16" O/C

BEAM SCHEDULE	
TYPE	DESCRIPTION
B1	3-2x6 SPF No.1/2 AT BOTTOM OF STRUCTURAL ROOF CURB
B2	3-1 3/4" x 9 1/2" 2.0E LVL

POST SCHEDULE	
TYPE	DESCRIPTION
P1	3-2x6 SPF No.1/2

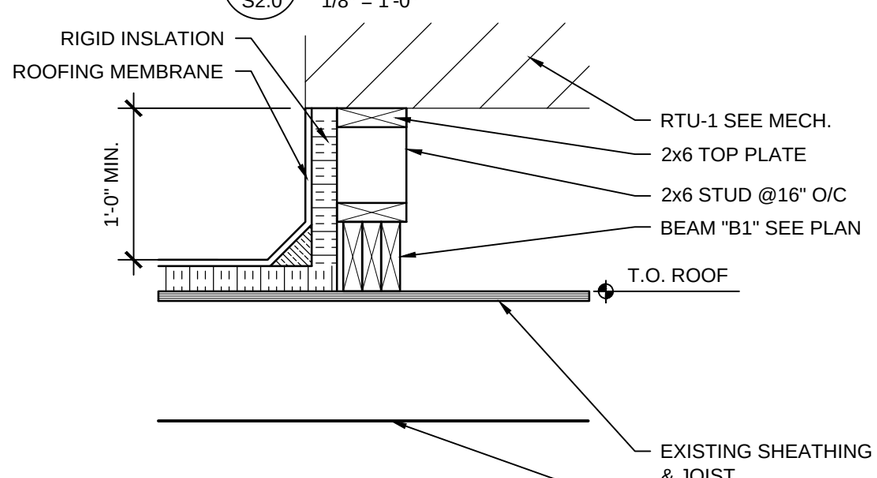

1 / S2.0 SECTION
1" = 1'-0"

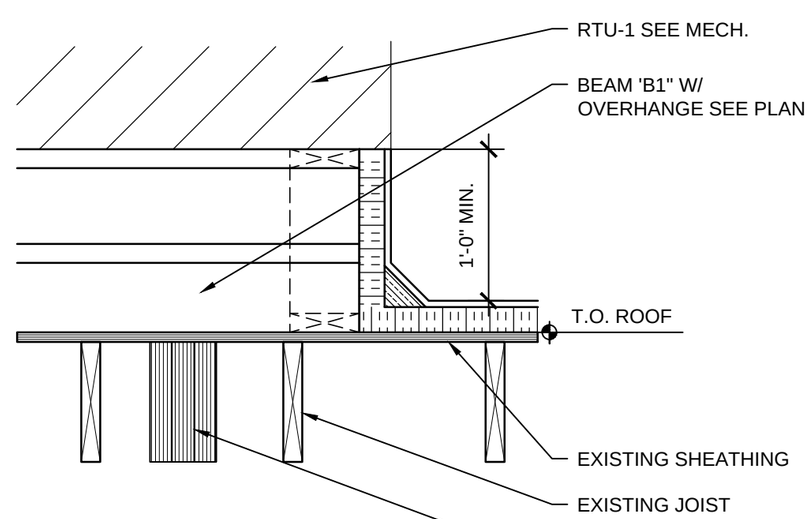

2 / S2.0 SECTION
1" = 1'-0"

ISL Engineering and Land Services
Calgary Office 403 254-9186
#1, 6325 - 12 St SE, Calgary, AB T2H 2K1

P.Eng. Permit

No.	DESCRIPTION	BY	DATE
2	ISSUED FOR TENDER	AW	2015.11.13
1	ISSUED FOR REVIEW	AW	2015.09.28

REVISIONS

Project
117 BEAVER STREET
117 BEAVER STREET, CALGARY ALBERTA

Title
ROOF FRAMING PLAN

Scale	AS NOTED	Revision No.	1
Project No.	60861		
Drawn:	TN	Drawing No.	S2.0
Designed:	TH Date DATE		
Design Checked:	AW		
Discipline Review:	AW Date DATE		

File Path

Appendix D

Directive 17- Environmental Best Management Practices for Construction Projects

Banff National Park –Environmental Best Management Practices

For Construction Projects

PURPOSE

The following measures are intended to protect the integrity of the environment in the national park. Project proponents (applicants for building permits, and/or project managers), are responsible for their implementation. Additional specific measures required will be outlined in project specific environmental assessment.

Project Coordination

National Parks are special places- Development projects within National Park boundaries will require special attention. Individuals carrying out such projects will require a heightened awareness of environmental stewardship.

Project Manager- person responsible for project coordination on behalf of the proponent and contractors.

Environmental Surveillance Officer (ESO) or **Environmental Monitor (EM) –** assures appropriate level of environmental protection is in place and that compliance/conformance with project environmental commitments are met. They operate independently of the proponent or contractors.

CONDUCT OF WORK

Proponents must notify the Canadian Environmental Assessment Specialist (403-762-1419) of the proposed work schedule at least two weeks in advance so an environmental surveillance officer (ESO) can be appointed, and any surveillance activities accommodated.

If stipulated by the environmental surveillance officer (ESO), a start-up meeting will be held on site involving the proponent, engineering staff, project contractor(s) and the ESO. The meeting is to ensure key construction personnel are aware of the environmental concerns, laws, rules and regulations in Banff National Park.

Periodic on-site meetings with the ESO and the Project Manager may be required during the development phase to discuss environmental concerns. Outstanding problems or significant deviations from approved plans which cannot be resolved at the field level will be presented to the Park Superintendent, or his delegate, for final decision.

No work may commence before all necessary approvals and permits have been obtained from Parks Canada.

Construction workers are required to obtain a National Park Pass. This temporary pass may be obtained from the front office at the Banff National Park administration building.

All contractors must have a valid Business license which may be obtained through contacting the Banff National Park Business Liaison Officer at 403-762-1530.

All park regulations, relevant federal and provincial acts, regulations, guidelines and codes of good practice will apply to all work and activities associated with this project.

Hours of Work: Work hours are generally 7 a.m. and 7 p.m., Monday to Saturday and typically there is no work on Sundays or statutory holidays.

1. SITE ACCESS

Only designated access routes are to be used by construction personnel only.

Vehicle parking is restricted to established roads or identified parking area(s).

It is the responsibility of the contractor to adhere to seasonal vehicle weight restrictions on specific roads such as the Minnewanka loop road. Road weight restrictions are implemented in the spring to minimize damage to road surfaces. The contractor is responsible to contact the ESO to acquire the restriction dates as the windows vary from year to year.

Construction site boundaries must clearly be delineated by flagging or fencing materials and maintained throughout the duration of the project.

Roads, sidewalks and other public accesses are to be maintained with minimal interference unless otherwise noted.

2. SANITARY AND GARBAGE

The contractor shall be required to provide regularly serviced sanitary (toilet) facilities for construction personnel.

The construction site must be maintained in a tidy condition.

All on-site garbage containers used for domestic garbage must be bear-proof.

Food waste is not to be thrown in construction waste bins.

Burning or burial of waste is <u>not permitted</u>.

Trucks hauling excavation fill material and waste are responsible to ensure nothing escapes during transport.

3. WILDLIFE

The contractor shall ensure that there is no harassment of wildlife occurs as a result of the construction activity and that no action is permitted which will attract wildlife to the site.

The contractor will immediately notify Banff Dispatch at 403-762-1470, to inform of any wildlife encounters on or around the work site or crew accommodation.

The contractor is to report observations of wildlife species such as cougar, wolf, lynx, bear, wolverine, and moose, to Banff Dispatch at 403-762-1470 and/or may inform the ESO.

4. CULTURAL RESOURCES

The contractor will immediately inform the ESO and/or the Project manager of any items of historic interest or evidence of archaeological finds that are discovered on the development site (i.e.: old garbage dump sites, cabin sites, etc.). Where possible, the object is to be left in situ until the ESO arrives.

The ESO will provide direction to the Construction Project manager as to the method in which to proceed with the work through consultation with Park Archaeologists.

All historical and prehistoric finds must be protected and will remain the property of Parks Canada.

5. SITE PREPARATION

The work area must be clearly delineated using flagging tape. Use of spray paint is not permitted.

6. TOPSOIL/VEGETATION REMOVAL

The contractor must contact the ESO at least 5 days prior to commencement of tree/vegetation removal. This will enable the ESO time for pre-site inspection.

The topsoil layer in the BNP area is generally very thin. Successful site rehabilitation depends on careful salvaging of the limited topsoil/duff layer.

Existing top soil should be stripped and stock piled separately from subsoil to prevent mixing.

Care must be taken during both grubbing and stripping operations to ensure that the trees and roots on the edge of the clearing limits are not disturbed or damaged. This phase will be closely monitored by the ESO.

In some instances where steep back slopes are involved, grubbing and stripping may not be permitted. Stumps should be cut flush with the ground, and the ground cover left undisturbed to promote slope stability. This will be determined by an on-site inspection by the ESO.

Material encountered below the topsoil layer, which is not suitable for construction purposes may be disposed of at designated location. Arrangements to dispose of the surplus material must be made through discussion with the ESO.

7. CONTAMINATED SOIL

The issue of contaminated soils and disposal practices will normally be identified through the EA process. However, where past and present land use practices have led to soil contamination, certain actions will be required. These include:

Soil testing at the expense of the proponent: Level of contamination will be in accordance with the Canadian Council of Ministers of the Environment guidelines, and acceptable levels will be decided by the park. Minimum acceptable standards for in-Park soil contamination and remediation will be to the "Parkland" level.

Contaminated soil disposal will be at the expense of the proponent. Written proof of disposal of contaminated soils will be required. The closest Class 3 landfill site to Banff National Park is the Francis Cooke Landfill in Exshaw, contact number is 403-673-2708.

8. DISPOSAL OF TREES

Generally, trees are to be cut so that they fall inside the cleared construction site parameters. Tree removal will be detailed on approved site plan or landscaping plan. If not the contractor must contact the ESO for instruction on site specific method of tree disposal

Trees larger than 15 cm (DBH) shall be cut into blocks not to exceed 35 cm. and stockpiled at a designated location for use as firewood and/or if deemed necessary, the contractor is responsible to haul the wood to a pre-approved location.

Trees under 15 cm (DBH) and other woody materials such as stumps, tops, and limbs can be disposed of by chipper and deposited at a designated site; or depending on fire hazard and weather conditions, on-site burning may be permitted through consultation with the ESO and Fire/Vegetation Specialist.

Where possible, every effort will be made to minimize the number of trees cleared. Douglas Fir trees are considered a special resource, and therefore, require consultation with the ESO before removal.

9. CONSTRUCTION MATERIALS

Materials Storage
Construction material shall normally be stored within the confines of the construction site. Under no circumstances may construction materials be stockpiled in the trees along the perimeter of the site or upon any area designated for protection within the site. Off-site storage of materials in undisturbed areas may be allowed only from pre-approval by the ESO.

Trade Waste
Trade waste (construction waste) materials will be disposed of at the designated trade waste area only. There no longer is a trade waste facility in Banff National Park. The nearest trade waste facility is the Francis Cooke Regional Class 3 Landfill located in Exshaw, AB. For more information contact the facility directly at 403- 673-2708.

Toxic/Hazardous Materials
All toxic/hazardous materials will be stored and used in accordance with relevant Federal and Provincial legislation pertaining to these materials. Spill contingency plans and equipment will be on-site, and employees will be aware of such emergency procedures as required. The ESO will be made immediately aware of any and all spills of toxic or hazardous materials. All hazardous wastes will be disposed of at an approved site outside BNP. This material will be disposed of in conformance with all relevant Federal and Provincial legislation and regulations pertaining to the transport and disposition of hazardous wastes.

10. FUEL STORAGE

Permits for on-site storage of fuel or other inflammable liquids must be obtained from the ESO.

Fuel storage and refuelling areas will be designated and must be a minimum of 50 metres from any water body.

The designated storage area will be bermed to enclose 125 % of anticipated storage tank volume. The bermed storage area will be underlain with an impermeable liner. All contaminated rainwater, contained within the berm, will be collected and removed from the park. Other special protection measures may be required to prevent mechanical damage of the tank.

All soil material contaminated during refuelling operations will be collected and disposed of outside BNP at an appropriate facility. Written verification of such disposal will be provided to the ESO.

Spill contingency plans will be developed and appropriate equipment to implement such plans will be in place, in the event of accidental spillage or tank malfunction. Fire protection equipment will be available on-site. The ESO or designate must be contacted immediately to be made aware of any spill. If the spill occurs outside of regular working hours, the contractor is to contact Banff Dispatch at 403-762-1470.

11. EXCAVATING

Excavation areas must be fenced and clearly delineated to restrict access by both people and wildlife. Where possible, work will be conducted in such a manner to minimize leaving open excavations overnight. Any open excavations must be covered securely overnight.

Disposal of surplus excavation material shall be handled in a similar manner to the disposal of surplus stripping material.

It is extremely important in all excavations to ensure that excavated material is not permitted to sluff into the surrounding tree cover, or to bury any plant material that is to be retained. Trees and shrubs on the perimeter of the site can be severely damaged by burial or damage involved in retrieving this material at a later date.

Rocks rolling down steep slopes during excavation or dumping of fill material can severely damage vegetation below. Special attention by equipment operators and extensive downslope protection work may be required.

Careful equipment operation is required to ensure that mechanical damage to trees and surrounding vegetation does not occur. If damage does occur, the contractor will be responsible to replace the vegetation at their own cost.

All equipment operators should be instructed that the operation of construction equipment off-site is not permitted. This applies both to the perimeter of the site, and to any areas within the site that are protected in a natural state.

Park Archaeologists must be informed of any projects in the Park that require excavation. This will be scheduled at the preliminary/design phase of the project. Archaeological/historical concerns will be cleared by Park Archaeological Division prior to initiation of excavation.

Material sources, material storage areas and width of excavation ditches, trucking requirements, etc., will be identified and recognized as part of the cost estimate of the project.

All open excavations will be signed and fenced appropriately in order to minimize hazards to both the general public and to wildlife.

12. FOUNDATION AND CONCRETE WORK

Indiscriminate disposal of concrete or concrete residues around the site perimeter is not permitted. A concrete truck cleanout area will be identified for each project through consultation with the ESO. Concrete residues will be disposed of at an approved location outside the Park at the proponent's expense.

13. POLLUTION OF RIVERS AND STREAMS

No rock, silt, cement, grout, asphalt, petroleum product, lumber, vegetation, domestic waste, or any deleterious substance shall be placed or allowed to disperse into any stream, river, pond, storm or sanitary sewer, or other water course.

All fuels, oils, lubricants and other petrochemical products will not be stored within 100 meters of any waterbody (including wetlands).

The crossing of any waterbody (including wetlands) by construction equipment, or the use of such equipment within waterbodies is strictly prohibited unless prior approval has been confirmed through the EA process.

Only approved chemically treated wood will be allowed near water courses. Sawdust and wood scraps will not be allowed to enter waterbodies.

Erosion control measures will be implemented on all construction sites in order to ensure that off-site run-off is minimized and sediments contained within site perimeters. All pumping of water will be subject to approval of the ESO.

Site rehabilitation will be an urgent priority. For construction areas adjacent to watercourses, special protection and / or reclamation measures may be required.

River or streambeds will not be used for borrow materials.

Excavated fill or debris will not be dumped into waterways.

14. POLLUTION PREVENTION AND SPILL REPORTING

Contaminated waste from demolition/construction must be disposed as outlined previously.

Fuel will not be stored on site without pre-approval. Refueling of excavation equipment will occur on hardened surfaces away from water resources only and care taken to avoid spillage.

All fuel, lubricant, oil, hydraulic fluid, or chemical spills must be reported immediately to the Banff Emergency Services (9-1-1). And measures undertaken for immediate containment and clean up by personnel on site. A spill kit of sufficient size to contain and clean up 110% of the site's largest possible fuel/chemical spill must be retained on site. All personnel on site must be aware of the kit, its location and proper use.

Noise and air pollution on site from excavation equipment and trucks will be kept to a minimum by shutting off motors when not in use.

A radon test should be performed before the basement floor is poured so that venting can be installed if required.

Deposit of deleterious substances such as paint, stucco mix, solvents, and petroleum products into street gutters or storm sewers is not permitted.

Equipment and generator plants will operate in accordance with the Alberta Clean Air Act, and Federal Environmental Protection Service emission control regulations/guidelines.

Work schedules and equipment use may be controlled to prevent excessive noise and disturbance to Park visitors. Any such control measures should be specified in the contract documents.

Materials and work site areas will be wetted down as necessary, to prevent blowing dust and debris. Measures will be taken to contain and control and collect windblown debris.

All hazardous and potentially toxic materials used in development projects will be securely stored in a responsible manner during construction activities.

15. SITE REHABILITATION

The contractor must consult with the ESO for the acquisition of site specific native seed mixes and plantings acceptable for use in the park. Native species with low palatability to wildlife are preferred, to avoid enticement and conflict. Fruit bearing trees are generally not acceptable under this present strategy. Trans-plantings may be available from within the park **by permit only.**

Ensure all seed used or sod for lawns and other plantings, such as trees and shrubs, do not transport or carry non-native plants, noxious or restricted weeds. Should a noxious or restricted plant species appear at a future date, the proponent will be responsible for eradication at the direction of Parks Canada.

Fencing must meet "Architectural Motif Guidelines for Banff National Park, and will be designed to prevent wildlife access to lawns and gardens.

Topsoil or other soil (sod) and mulch materials for restoration must be certified free of non-native plant seed.

All trees and plants not designated for removal from a site must be protected. Roots of trees to drip line must be protected during excavation and site grading to prevent disturbance and damage. Unnecessary traffic, dumping, and storage of materials over root zones can cause soil compaction and suffocation of roots.

Site rehabilitation will receive the highest level of attention. A landscape plan that identifies rehabilitation goals and identifies physical limitations (i.e. water, soil nutrients, suitable species, etc.) to rehabilitation success, will be required.

Any deviation from the Park approved landscape plan will require permission from the Superintendent or designate.

All survey stakes, flagging tape, etc. is to be removed at the completion of the project.

The Construction Project Manager and ESO will inspect the construction site for the following:

-a thorough site cleanup including general litter
-assess that any required topsoil is clean and weed free
-sources of topsoil introduced into the Park require ESO pre-approval
-the use of appropriate plant species and plant seed mix

16. **BLASTING** (see Park Directive #14 *"Control of Explosives"*)

All blasting must conform to existing regulations and be accomplished under the supervision of a licensed blaster.

No blasting will be allowed under water or within 100 meters of spawning beds.

Storage of explosives will be subject to National Parks Regulations.

Fly rock shall not be permitted to damage surrounding vegetation. Use of blasting mats may be required.

17. **ENERGY EFFICIENCY**

To minimize demands placed on existing energy infrastructure, energy efficient and water saving fixtures must be incorporated into any new facility.

Exterior lighting must meet the Parks Canada “Dark Skies” lighting policy.

BANFF DISPATC H NON-EMERGENCY – 403.762.1470

BANFF DISPATCH EMERGENCY – 403.762.4506

HIGHWAY OR TOWN EMERGENCY - 911