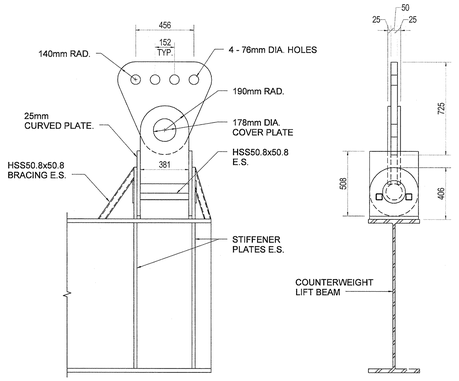

1 NS-S3 EXIST. COUNTERWEIGHT LIFTING BEAM BUMPER DETAIL

SCALE: 1 : 20

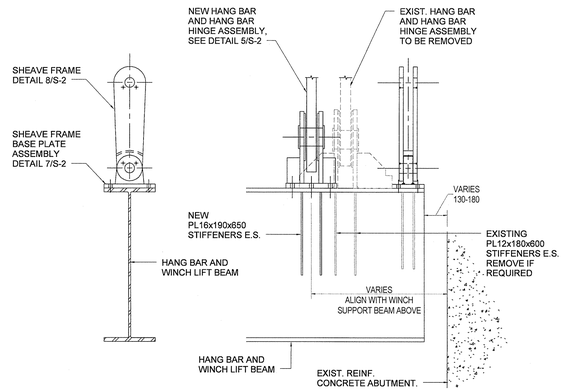

2 NS-S3 ASSEMBLIES ON HANG BAR AND WINCH LIFT BEAM

SCALE: 1 : 20

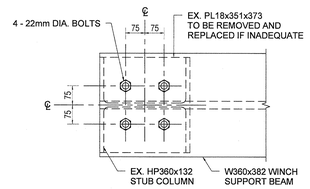

3 NS-3 WINCH SUPPORT BEAM CONNECTION TO STUB COLUMN

SCALE: 1 : 10

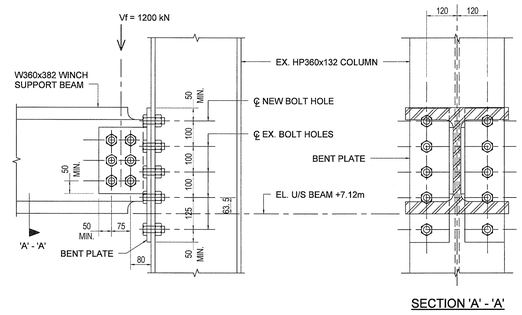

4 NS-3 WINCH SUPPORT BEAM CONNECTION TO EXIST. FRAME

SCALE: 1 : 10

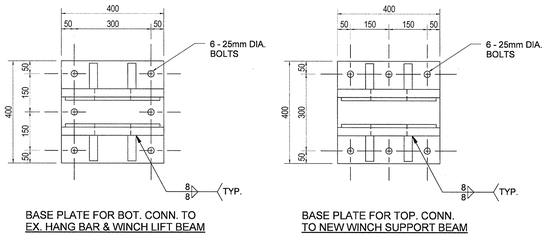

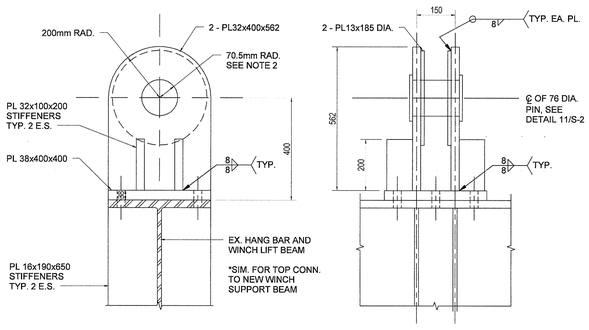

5 NS-S3 HANG BAR HINGE ASSEMBLY

SCALE: 1 : 10

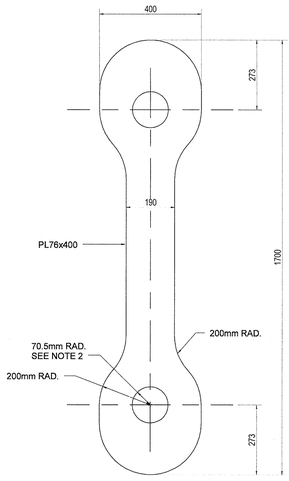

6 NS-S2 HANG BAR DETAIL

SCALE: 1 : 10

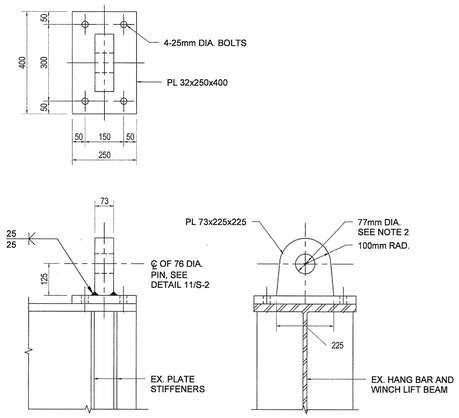

7 NS-S2 SHEAVE FRAME BASE PLATE ASSEMBLY

SCALE: 1 : 10

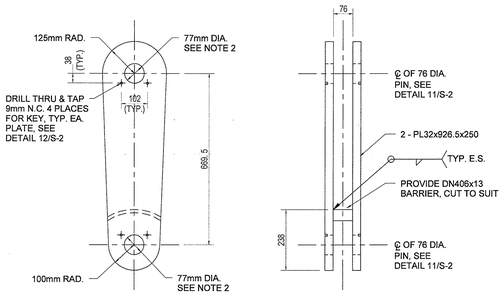

8 NS-S2 SHEAVE FRAME DETAIL

SCALE: 1 : 10

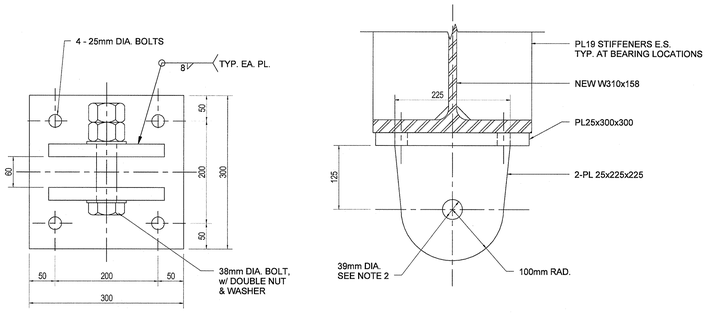

9 NS-S3 WINCH ANCHOR DETAIL

SCALE: 1 : 5

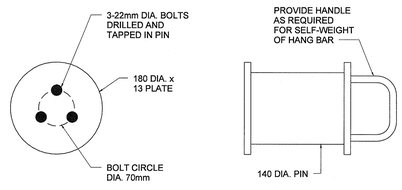

10 NS-S2 140 DIA. PIN AND PIN PLATE DETAIL

SCALE: 1 : 5

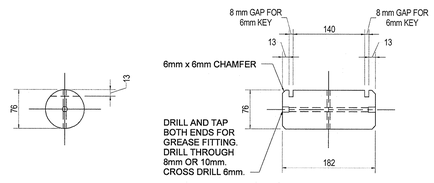

11 NS-S2 76 DIA. PIN DETAIL

SCALE: 1 : 5

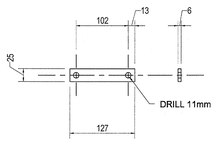

12 NS-S2 KEY DETAIL

SCALE: 1 : 5

Public Works and Government Services Canada / Travaux Publics et Services gouvernementaux Canada

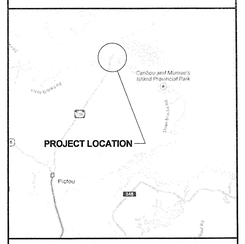

SNC·LAVALIN

SNC·LAVALIN Inc.
Halifax, Nova Scotia, Canada

Certified ISO 9001

Member of the SNC-LAVALIN Group

NOTES:

1. MINIMUM SIZE OF FILLET WELD TO BE 6mm U.N.O
2. THE DIAMETER OF A PIN HOLE SHALL BE NOT MORE THAN 1mm LARGER THAN THE DIAMETER OF THE PIN.

REGISTERED PROFESSIONAL ENGINEER — PROVINCE OF NOVA SCOTIA — 7765

revisions		date
C02	ISSUED FOR TENDER	DEC 01 2015

project / projet

CARIBOU/WOOD ISLANDS RAMP LIFTING MECHANISM UPGRADE

drawing / dessin

SECTIONS AND DETAILS CARIBOU

designed / concu: C.S./M.A.P.
date: OCT. 24, 2014
drawn / dessine: T.B./J.O.
date: OCT. 24, 2014
approved / approuve: N.L.
date: OCT. 24, 2014
Tender / Soumission
PWGSC Project Manager / Représentant de projets TPSGC

project number / no. du projet: R.064789.001

drawing no. / no. du dessin: NS-S2

E-DRM/GCD-E # VER. 1

PWGSC B1 (2004)