NOTES:
1. LADDERS, CLEAT BLOCKS, PEDESTALS, ETC. NOT SHOWN FOR CLARITY.

LEGEND:
- BEARING STEEL HP PILE
- BATTER STEEL HP PILE
- FENDER PILE
- FENDER PILE NOTED TO BE LOOSE AT DECK
- ELEVATION AND/OR HAVE A BOLT PROTRUDING OUT FROM THE PILE FACE

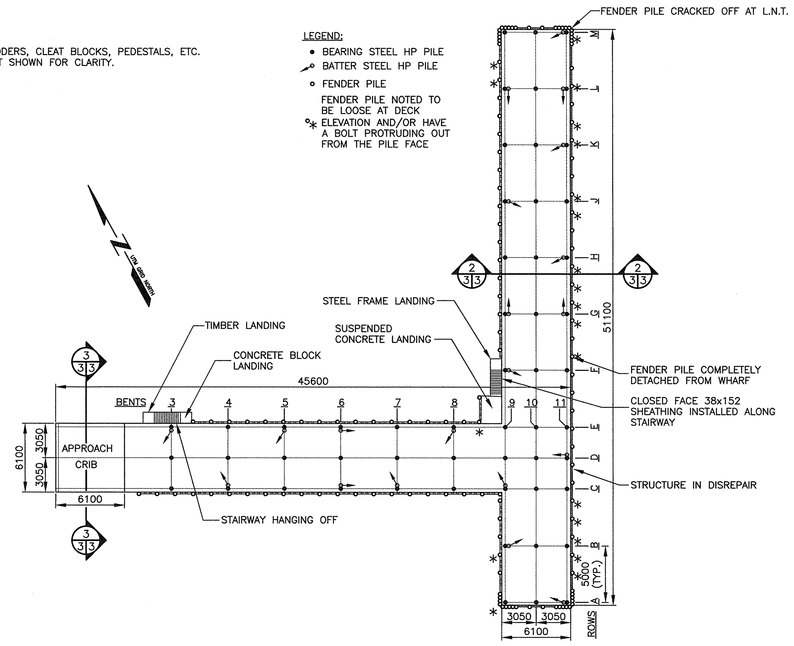

1/3 3 PLAN VIEW – EXISTING WHARF
SCALE: 1:250
0m 5m 10m 15m 20m 25m

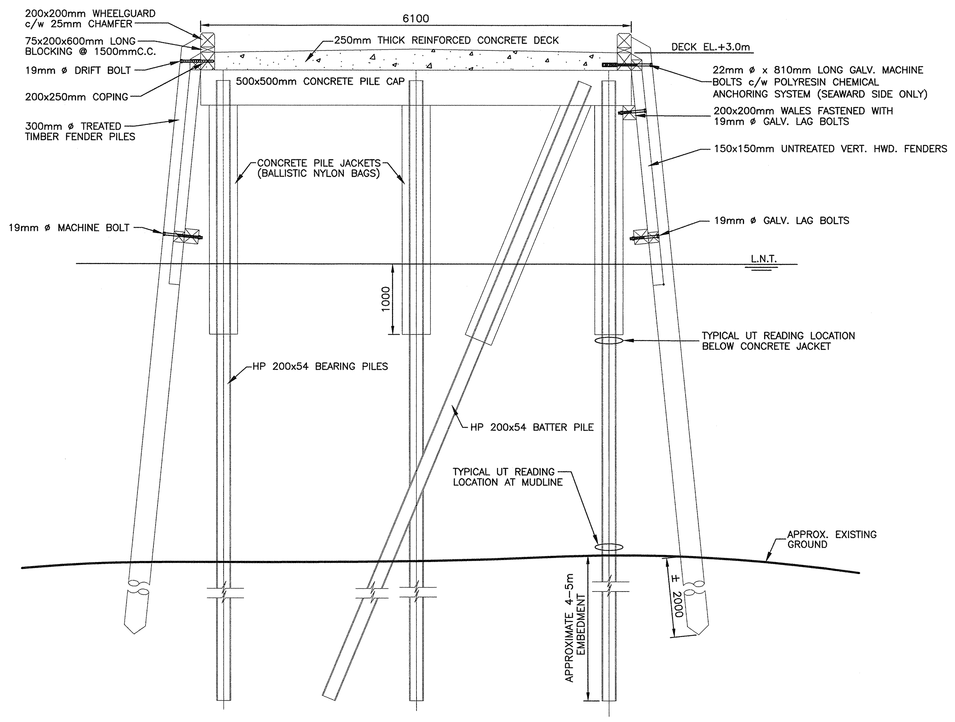

2/3 3 SECTION – EXISTING WHARF
SCALE: 1:40
0m 1m 2m 3m 4m 5m

NOTES

1. ALL DIMENSIONS ARE IN MILLIMETRES, UNLESS OTHERWISE NOTED.
2. DO NOT SCALE FROM DRAWINGS.
3. ALL PILES (80) TO BE REMOVED.
4. DIVING INSPECTION DIDN'T NOTE ANY ITEMS TO BE REMOVED ON SEAFLOOR OTHER THAN DREDGING WHERE NEEDED.

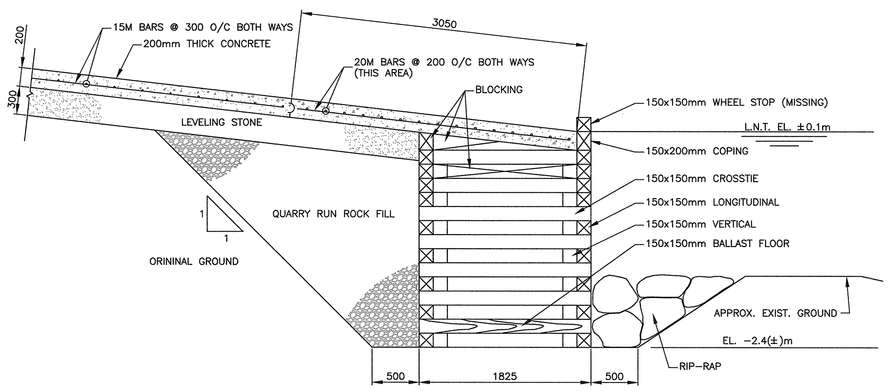

1/2 3 SECTION – EXISTING SLIPWAY
SCALE : 1:30
0m 1000mm 2000mm 3000mm

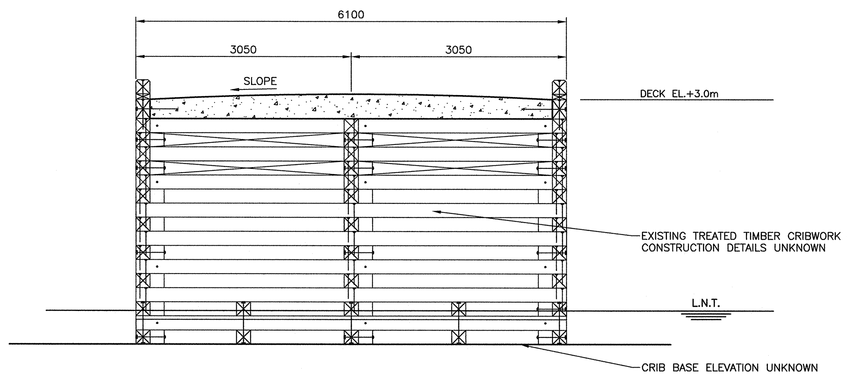

3/3 3 APPROACH CRIB SECTION
SCALE: 1:40
0m 1m 2m 3m 4m 5m

Public Works and Government Services Canada / Travaux Publics et Services gouvernementaux Canada

REGISTERED PROFESSIONAL ENGINEER
STEPHEN CHAYTOR
REGISTRATION
15/11/06
DATE
NEWFOUNDLAND & LABRADOR

PROVINCE OF NEWFOUNDLAND AND LABRADOR
PEGL Newfoundland and Labrador
PERMIT HOLDER
This Permit Allows
Meridian Engineering Inc.
To practice Professional Engineering in Newfoundland and Labrador.
Permit No. as issued by PEG N0453
which is valid for the year 2015.

revisions		date
C	ISSUED FOR TENDER	15/11/06
B	ISSUED FOR 99% REVIEW	15/10/16
A	ISSUED FOR 66% REVIEW	15/09/11

project / projet
NEWMAN SOUND (HEADQUARTERS) WHARF RECONSTRUCTION

drawing / dessin
EXISTING WHARF PLAN AND SECTIONS

designed / conçu: S. CHAYTOR
date: SEPT, 2015
drawn / dessiné: R. SNOW
date: SEPT, 2015
approved / approuvé
date
Tender / Soumission
PWGSC Project Manager / Administrateur de projets TPSGC
project number / no. du projet: R.072196.004
drawing no. / no. du dessin: C3 OF 13

PWGSC B1 (2004)
E-DRM/GDD-E: 531505