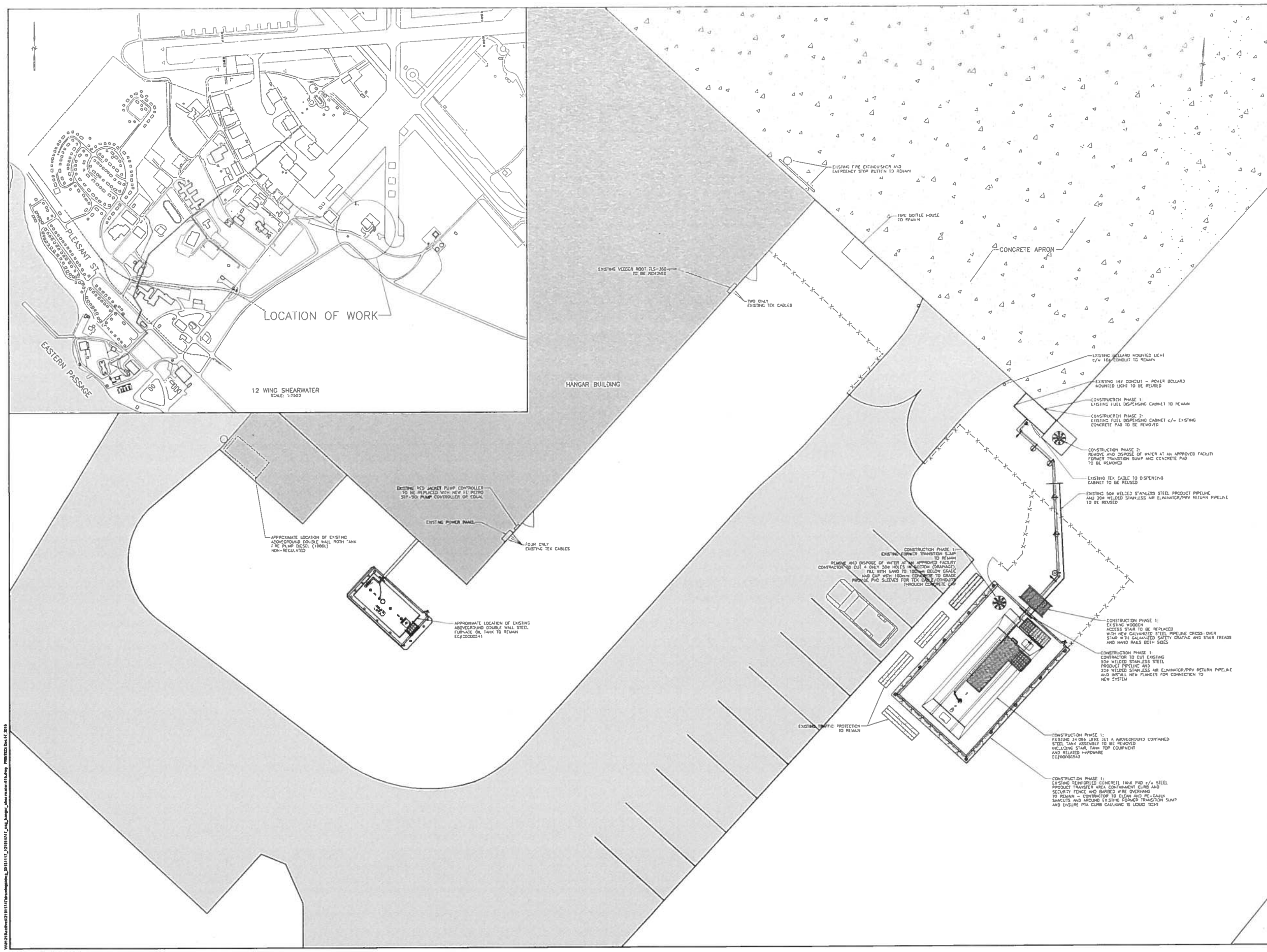

NOTES:

1) INSTALLER TO VERIFY LOCATION OF ALL PROPERTY BOUNDARIES, STRUCTURES, UTILITIES, ROADS/DRIVEWAYS, WELLS, WATERCOURSES AND WATERBODIES BEFORE BEGINNING OF WORK

2) INSTALLER TO ADVISE ENGINEER OF ANY ADDITIONS OR CHANGES TO THE PLAN RESULTING FROM NOTE 1 PRIOR TO BEGINNING OF WORK

3) ALL INSTALLATIONS SHALL COMPLY WITH FEDERAL REGULATIONS, THE NATIONAL FIRE CODE OF CANADA, THE CANADIAN ELECTRICAL CODE, STORAGE, HANDLING AND DISPENSING OF AVIATION FUELS AT AERODROMES CODE, AS WELL AS ANY OTHER GOVERNING CODES AND INSTALLATION PRACTICES.

4) THE EMERGENCY STOP BUTTONS SHALL SHUT DOWN ALL POWER TO THE SUBMERSIBLE PUMP, CABINET & SECONDARY WHEN PRESSED.

5) THE EMERGENCY STOP BUTTON MUST BE REMOTELY LOCATED, c/w SIGNAGE (7-20m FROM THE DISPENSING AREA) (CLEARLY VISIBLE FROM FUEL-DISPENSING AREA).

6) CONTRACTOR TO VERIFY INTEGRITY OF TANK INTERSTITIAL VACUUM PRIOR TO INSTALLATION

7) SYSTEM OWNER TO ENSURE MEASURES ARE TAKEN TO PREVENT UNAUTHORIZED ACCESS TO THE STORAGE TANK AND AUTOMATIC EQUIPMENT

8) ALL NEW EQUIPMENT SHALL BE INSTALLED AND INSTALLED AS PER MANUFACTURER'S INSTRUCTIONS.

9) OWNER IS RESPONSIBLE TO ENSURE AN APPROPRIATE EMERGENCY PLAN IS IMPLEMENTED TO MEET THE REQUIREMENTS OF THE CANADIAN ENVIRONMENTAL PROTECTION ACT, STORAGE TANK SYSTEMS FOR PETROLEUM PRODUCTS AND ALLIED PETROLEUM PRODUCTS REGULATIONS, 2008 (CEPA) SECTIONS 35-37.

10) PRIOR TO OPERATION, AS BUILT DRAWINGS BEARING AN ENGINEER'S STAMP MUST BE COMPLETED

11) SPILL KIT AND/OR ABSORBENT MATERIAL REQUIRED AT FUEL-DISPENSING AREA.

12) CONCRETE SPECIFICATIONS:
SOIL BEARING CAPACITY: 150psf min.
CONCRETE STRENGTH: 35MPa @ 28 DAYS, 5% TO 8% AIR ENTRAINMENT
FINISH: SMOOTH, ADD ONE COAT SEALING/CURING COMPOUND. ALL OUTSIDE EDGES OF CONCRETE TO BE TOOLED A MINIMUM OF 38mm WIDE.
REBAR: 10M@
15) DO NOT UNDERMINE OR COMPROMISE ANY FOOTINGS OR FOUNDATION STRUCTURES. ALWAYS BE AWARE OF THE LOCATION OF EXISTING UTILITIES AND OVERHEAD POWER LINES.

16) EXCAVATION TO BE BACKFILLED WITH 31.5mm CRUSHED GRAVEL

17) ALL FILL MUST BE PLACED IN LIFTS NOT EXCEEDING 200mm IN LOOSE THICKNESS, AND BE COMPACTED THROUGHOUT THE LIFT THICKNESS TO A MINIMUM OF THE MATERIAL'S MODIFIED PROCTOR MAXIMUM DRY DENSITY. DEPENDING ON THE COMPACTION EQUIPMENT, THINNER LIFTS MAY BE NECESSARY IN ORDER TO ACHIEVE THE SPECIFIED COMPACTION CRITERIA.

18) IF FURTHER CLARIFICATIONS ARE REQUIRED ON EQUIPMENT OR THE INSTALLATION OF EQUIPMENT, IT IS THE CONTRACTORS RESPONSIBILITY TO REQUEST CLARIFICATIONS FROM THE CONSULTANT.

19) THESE DRAWINGS TO BE USED FOR GENERAL GUIDANCE SHOWING APPROXIMATE EQUIPMENT ARRANGEMENT ONLY.

20) THE SYSTEM IS REQUIRED TO BE EQUIPPED WITH THE FOLLOWING FEATURES:
- OVERFILL PREVENTION VALVE
- ANTI-SIPHON DEVICE OR N.C. SOLENOID VALVE c/w THERMAL RELIEF
- SPILL CONTAINMENT BOX
- PTA CONTAINMENT CURB
- EMERGENCY SHUT-OFF DEVICE FOR ALL POWER TO SYSTEM
- 2 x 40B:C FIRE EXTINGUISHERS (PURPLE K PREFERRED)
- FULLY STOCKED SPILL KIT
- EMERGENCY AND SAFETY SIGNAGE

21) ENVIRONMENT CANADA NUMBER REQUIRED TO BE POSTED AT THE FILL PIPE CONNECTION OF EACH STORAGE TANK

22) OWNER MUST NOTIFY ENVIRONMENT CANADA WITHIN 60 DAYS ONCE REGULATED SYSTEMS ARE REMOVED (CEPA SECTION 44)

STAMP

STAMP

NOTE: THIS DRAWING ILLUSTRATES INFORMATION SPECIFIC TO A STANTEC CONSULTING LIMITED PROJECT AND MUST NOT BE USED FOR OTHER PURPOSES.

APP'D	NO.	DETAILS	DATE
-	-	ISSUED FOR TENDER	15 12 07
-	-	ISSUED FOR CLIENT REVIEW	15 11 26

REVISIONS

DWG. NO.	DESCRIPTION	DATE

REFERENCES

PROJECT:
JET A1 DISPENSING SYSTEM REPLACEMENT

SITE ADDRESS:
CCG HANGAR SHEARWATER
12 WING SHEARWATER, DARTMOUTH NS

CLIENT:
DFO RPSS

JOB No.:	SCALE:	DATE:
121611747	1:100	15/11/20
DRAWN BY: JCB	DESIGNED BY: ERF	APPROVED BY: DT

DRAWING TITLE:
EXISTING SITE PLAN

DRAWING No.	REVISION No.	
01	-	Stantec

Stantec Consulting Limited © 2016

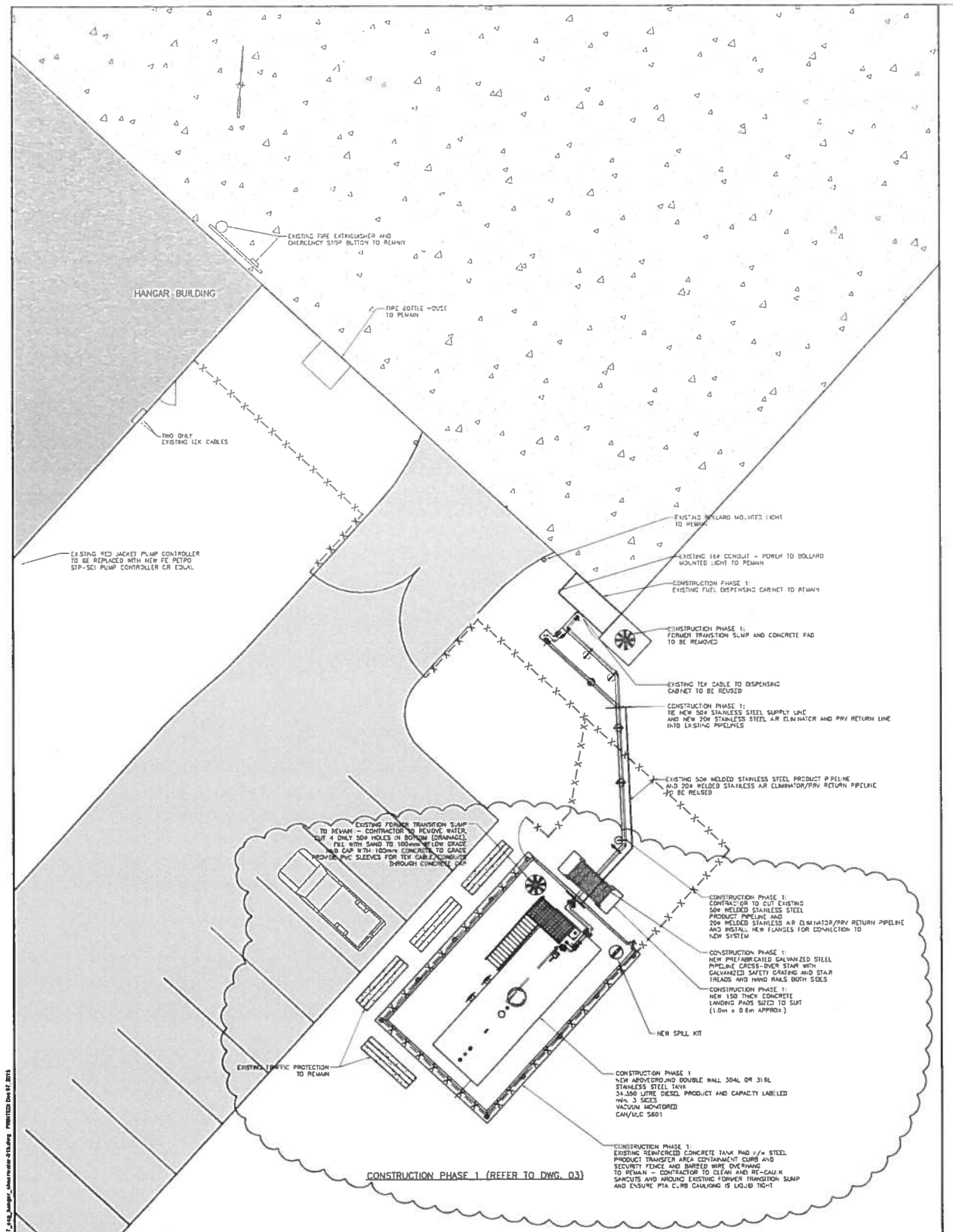

PROPOSED SITE PLAN - PHASE 1 (REFER TO DWG. 03)
SCALE: 1:100

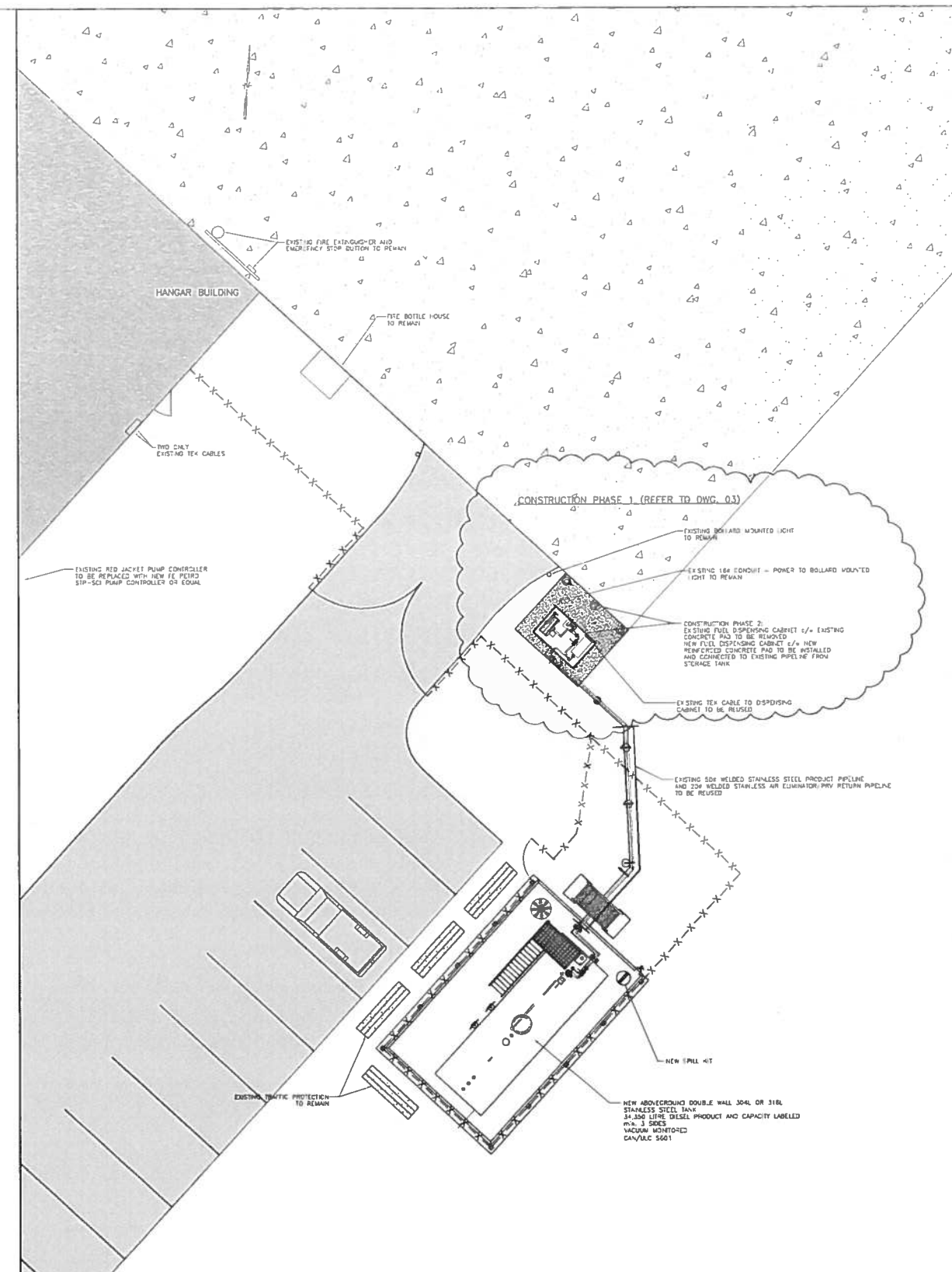

PROPOSED SITE PLAN - PHASE 2 (REFER TO DWG. 04)
SCALE: 1:100

NOTES:

1) INSTALLER TO VERIFY LOCATION OF ALL PROPERTY BOUNDARIES, STRUCTURES, UTILITIES, ROADS/DRIVEWAYS, WELLS, WATERCOURSES AND WATERLINES BEFORE BEGINNING OF WORK.

2) INSTALLER TO ADVISE ENGINEER OF ANY ADDITIONS OR CHANGES TO SITE PLAN RESULTING FROM NOTE 1 PRIOR TO BEGINNING OF WORK.

3) ALL INSTALLATIONS SHALL COMPLY WITH FEDERAL REGULATIONS, THE NATIONAL FIRE CODE OF CANADA, THE CANADIAN ELECTRICAL CODE, STORAGE, HANDLING AND DISPENSING OF AVIATION FUELS AT AERODROMES CODE, AS WELL AS ANY OTHER APPLICABLE CODES AND INSTALLATION PRACTICES.

4) THE EMERGENCY STOP BUTTONS SHALL SHUT DOWN ALL POWER TO THE SUBMERSIBLE PUMP, CABINET & SOLENOID WHEN PRESSED.

5) THE EMERGENCY STOP BUTTON MUST BE REMOTELY LOCATED, c/w SIGNAGE (7-30m FROM THE DISPENSING AREA) (CLEARLY VISIBLE FROM FUEL-DISPENSING AREA).

6) CONTRACTOR TO VERIFY INTEGRITY OF TANK INTERSTITIAL VACUUM PRIOR TO INSTALLATION.

7) SYSTEM OWNER TO ENSURE MEASURES ARE TAKEN TO PREVENT UNAUTHORIZED ACCESS TO THE STORAGE TANK AND ASSOCIATE EQUIPMENT.

8) ALL NEW EQUIPMENT SHALL BE ULC LISTED AND INSTALLED AS PER MANUFACTURER'S INSTRUCTIONS.

9) OWNER IS RESPONSIBLE TO ENSURE AN APPROPRIATE EMERGENCY PLAN IS MAINTAINED TO MEET THE REQUIREMENTS OF THE CANADIAN ENVIRONMENTAL PROTECTION ACT, STORAGE TANK SYSTEMS FOR PETROLEUM PRODUCTS AND ALLIED PETROLEUM PRODUCTS REGULATIONS, 2008 (CEPA) SECTIONS 35-37.

10) PRIOR TO OPERATION, AS BUILT DRAWINGS BEARING AN ENGINEER'S STAMP MUST BE CONSTRUCTED.

11) SPILL KIT AND/OR ABSORBENT MATERIAL REQUIRED AT FUEL-DISPENSING AREA.

12) CONCRETE SPECIFICATIONS:
SOIL BEARING CAPACITY: 150kPa
CONCRETE STRENGTH: 35MPa @ 28 DAYS, S3 TO 8% AIR ENTRAINMENT
FINISH: BROOM, ADD ONE COAT SEALING/CURING COMPOUND. ALL OUTSIDE EDGES OF CONCRETE TO BE TOOLED A MINIMUM OF 38mm WIDE
REBAR: 400MPa

13) DO NOT UNDERMINE OR COMPROMISE ANY FOOTINGS OR FOUNDATION STRUCTURES. ALWAYS BE AWARE OF THE LOCATION OF EXISTING UTILITIES AND OVERHEAD POWER LINES.

14) EXCAVATION TO BE BACKFILLED WITH 31.5mm CRUSHED GRAVEL.

15) ALL FILL WILL BE PLACED IN LIFTS NOT EXCEEDING 200mm IN LOOSE THICKNESS, AND BE COMPACTED THROUGHOUT THE LIFT THICKNESS TO A MINIMUM OF THE MATERIAL'S MODIFIED PROCTOR MAXIMUM DRY DENSITY. DEPENDING ON THE COMPACTION EQUIPMENT, THINNER LIFTS MAY BE NECESSARY IN ORDER TO ACHIEVE THE SPECIFIED COMPACTION CRITERIA.

16) IF FURTHER CLARIFICATIONS ARE REQUIRED ON EQUIPMENT OR THE INSTALLATION OF EQUIPMENT, IT IS THE CONTRACTORS RESPONSIBILITY TO REQUEST CLARIFICATIONS FROM THE CONSULTANT.

17) THESE DRAWINGS TO BE USED FOR GENERAL GUIDANCE SHOWING APPROXIMATE EQUIPMENT ARRANGEMENT ONLY.

18) THE SYSTEM IS REQUIRED TO BE EQUIPPED WITH THE FOLLOWING FEATURES:
- OVERFILL PREVENTION VALVE
- ANTI-SIPHON DEVICE OR N.C. SOLENOID VALVE c/w THERMAL RELIEF
- SPILL CONTAINMENT BOX
- PTA CONTAINMENT CURB
- EMERGENCY SHUT-OFF DEVICE FOR ALL POWER TO SYSTEM
- 2 x 40B-C FIRE EXTINGUISHERS (PURPLE K PREFERRED)
- FULLY STOCKED SPILL KIT
- EMERGENCY AND SAFETY SIGNAGE

19) ENVIRONMENT CANADA NUMBER REQUIRED TO BE POSTED AT THE FILL PIPE CONNECTION OF EACH STORAGE TANK

20) OWNER MUST NOTIFY ENVIRONMENT CANADA WITHIN 60 DAYS ONCE REGULATED SYSTEMS ARE REMOVED (CEPA SECTION 44)

STAMP

STAMP

NOTE: THIS DRAWING ILLUSTRATES INFORMATION SPECIFIC TO A STANTEC CONSULTING LIMITED PROJECT AND MUST NOT BE USED FOR OTHER PURPOSES.

APP'D	NO.	DETAILS	DATE
-	-	ISSUED FOR TENDER	15 12 07
-	-	ISSUED FOR CLIENT REVIEW	15 11 26

REVISIONS

DWG. NO.	DESCRIPTION	DATE

REFERENCES

PROJECT:
JET A1 DISPENSING SYSTEM REPLACEMENT

SITE ADDRESS:
CCG HANGAR SHEARWATER
12 WING SHEARWATER, DARTMOUTH NS

CLIENT:
DFO RPSS

JOB No.:	SCALE:	DATE
12-811747	1:100	15/11/20
DRAWN BY: JCB	DESIGNED BY: ERF	APPROVED BY: DT

DRAWING TITLE:
PROPOSED SITE PLANS
SHOWING PHASED APPROACH

DRAWING No.	REVISION No.
02	-

Stantec

Stantec Consulting Limited © 2015

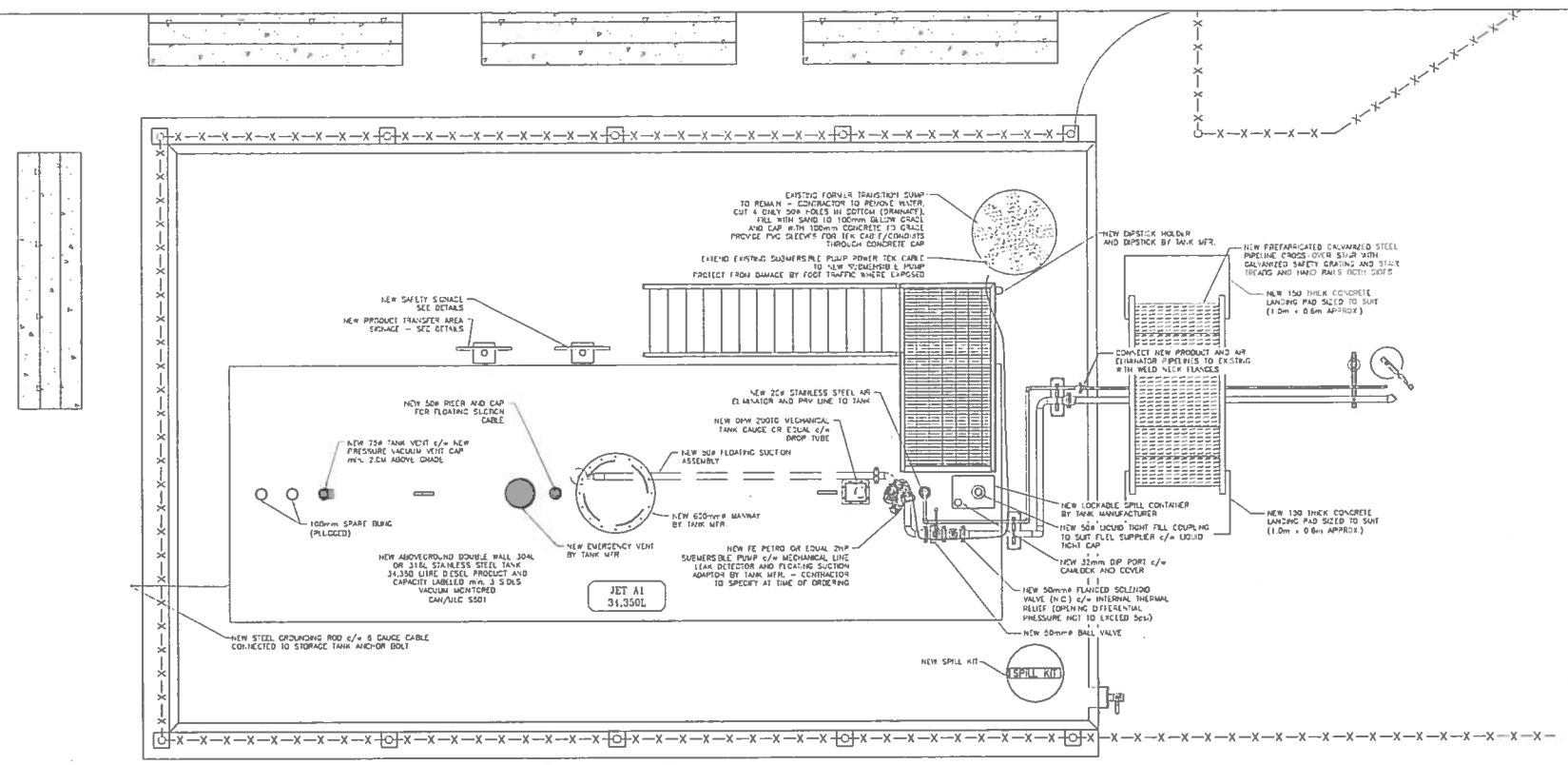

NEW TANK PLAN
SCALE: 1:50

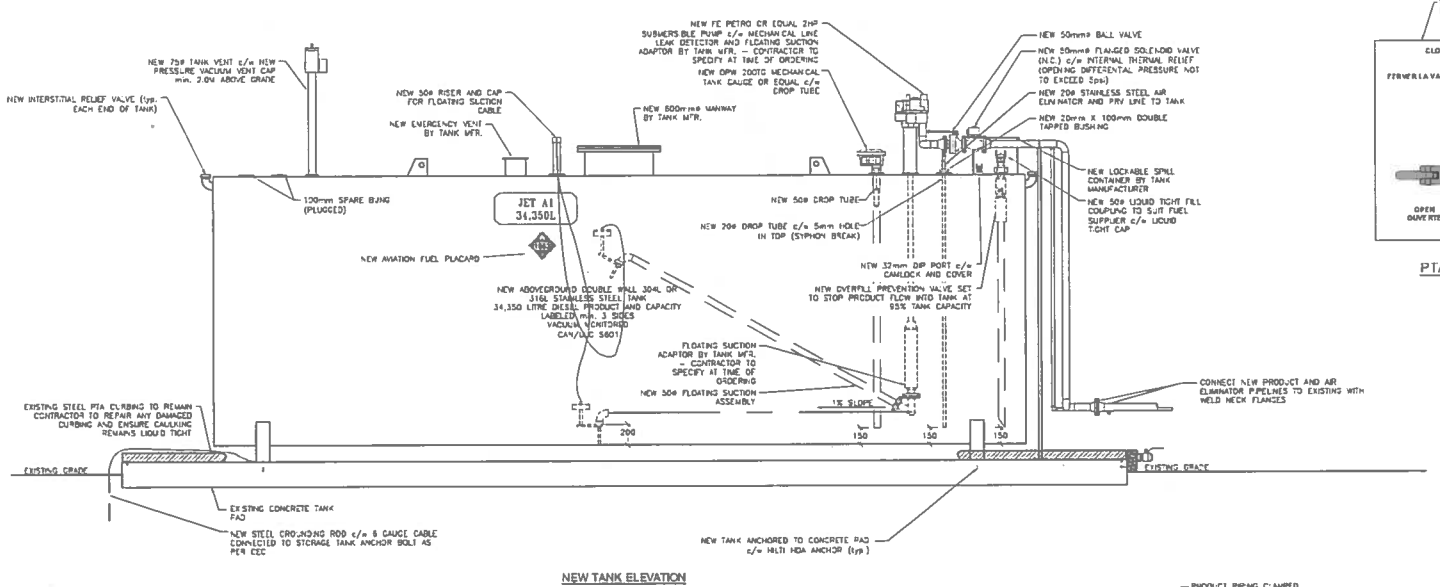

NEW TANK ELEVATION
SCALE: 1:50

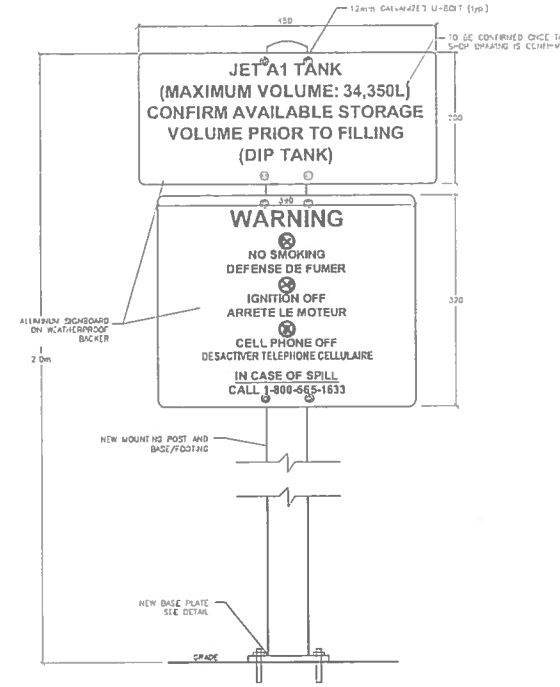

NEW SAFETY SIGNAGE DETAIL
TO BE POSTED AT TANK
SCALE: 1:3

NOTES:

1) INSTALLER TO VERIFY LOCATION OF ALL PROPERTY BOUNDARIES, STRUCTURES, UTILITIES, ROADS/DRIVEWAYS, WELLS, WATERCOURSES AND WATERBODIES BEFORE UNDERTAKING THE WORK.

2) INSTALLER TO ADVISE ENGINEER OF ANY ADDITIONS OR CHANGES TO SITE PLAN RESULTING FROM NOTE 1 PRIOR TO BEGINNING OF WORK.

3) ALL INSTALLATIONS SHALL COMPLY WITH FEDERAL REGULATIONS, THE NATIONAL FIRE CODE OF CANADA, THE CANADIAN ELECTRICAL CODE, STORAGE, HANDLING AND DISPENSING OF AVIATION FUELS AT AERODROMES CODE, AS WELL AS ANY OTHER CONFLICTING CODES AND INSTALLATION PRACTICES.

4) THE EMERGENCY STOP BUTTONS SHALL SHUT DOWN ALL POWER TO THE SUBMERSIBLE PUMP, CABINET & SOLENOID WHEN PRESSED.

5) THE EMERGENCY STOP BUTTON MUST BE REMOTELY LOCATED, c/w SIGNAGE (7-30 m FROM THE DISPENSING AREA) (CLEARLY VISIBLE FROM FUEL-DISPENSING AREA).

6) CONTRACTOR TO VERIFY INTEGRITY OF TANK INTERSTITIAL VACUUM PRIOR TO INSTALLATION.

7) SYSTEM OWNER TO ENSURE MEASURES ARE TAKEN TO PREVENT UNAUTHORIZED ACCESS TO THE STORAGE TANK AND ASSOCIATED EQUIPMENT.

8) ALL NEW EQUIPMENT SHALL BE ULC LISTED AND INSTALLED AS PER MANUFACTURER'S INSTRUCTIONS.

9) OWNER IS RESPONSIBLE TO ENSURE AN APPROPRIATE EMERGENCY PLAN IS IMPLEMENTED TO MEET THE REQUIREMENTS OF THE CANADIAN ENVIRONMENTAL PROTECTION ACT, STORAGE TANK SYSTEMS FOR PETROLEUM PRODUCTS AND ALLIED PETROLEUM PRODUCTS REGULATIONS, 2008 (CEPA) SECTIONS 35-37

10) PRIOR TO OPERATION, AS BUILT DRAWINGS BEARING AN ENGINEER'S STAMP MUST BE COMPLETED.

11) SPILL KIT AND/OR ABSORBENT MATERIAL REQUIRED AT FUEL-DISPENSING AREA.

12) CONCRETE SPECIFICATIONS:
SOIL BEARING CAPACITY: 150kPa min.
CONCRETE STRENGTH: 35MPa @ 28 DAYS, S4 TO 8% AIR ENTRAINING
FINISH: BROOM, ADD ONE COAT SEALER/CURING COMPOUND, ALL OUTSIDE EDGES OF CONCRETE TO BE TOOLED A MINIMUM OF 38mm WIDE.
REBAR: 400MPa

13) DO NOT UNDERMINE OR COMPROMISE ANY FOOTINGS OR FOUNDATION STRUCTURES. ALWAYS BE AWARE OF THE LOCATION OF EXISTING UTILITIES AND OVERHEAD POWER LINES.

14) EXCAVATION TO BE BACKFILLED WITH 31.5mm CRUSHED GRAVEL

15) ALL FILL WILL BE PLACED IN LIFTS NOT EXCEEDING 300mm IN LOOSE THICKNESS, AND BE COMPACTED THROUGHOUT THE LIFT THICKNESS TO A MINIMUM OF THE MATERIAL'S MODIFIED PROCTOR MAXIMUM DRY DENSITY. DEPENDING ON THE COMPACTION EQUIPMENT, THINNER LIFTS MAY BE NECESSARY IN ORDER TO ACHIEVE THE SPECIFIED COMPACTION CRITERIA.

16) IF FURTHER CLARIFICATIONS ARE REQUIRED ON EQUIPMENT OR THE INSTALLATION OF EQUIPMENT, IT IS THE CONTRACTORS RESPONSIBILITY TO REQUEST CLARIFICATIONS FROM THE CONSULTANT

17) THESE DRAWINGS TO BE USED FOR GENERAL GUIDANCE SHOWING APPROXIMATE EQUIPMENT ARRANGEMENT ONLY.

18) THE SYSTEM IS REQUIRED TO BE EQUIPPED WITH THE FOLLOWING FEATURES:
- OVERFILL PREVENTION VALVE
- ANTI-SYPHON DEVICE ON N.C. SOLENOID VALVE c/w THERMAL RELIEF
- SPILL CONTAINMENT BOX
- PTA CONTAINMENT CURB
- EMERGENCY SHUT-OFF DEVICE FOR ALL POWER TO SYSTEM
- 2 x ABC FIRE EXTINGUISHERS (PURPLE K PREFERRED)
- FULLY STOCKED SPILL KIT
- EMERGENCY AND SAFETY SIGNAGE

19) ENVIRONMENT CANADA NUMBER REQUIRED TO BE POSTED AT THE FILL PIPE CONNECTION OF EACH STORAGE TANK

20) OWNER MUST NOTIFY ENVIRONMENT CANADA WITHIN 60 DAYS ONCE REGULATED SYSTEMS ARE REMOVED (CEPA SECTION 44)

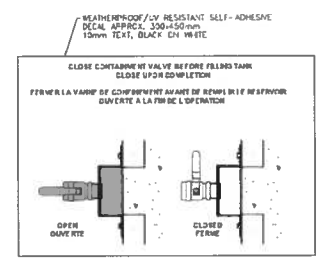

PTA INSTRUCTION DECAL DETAIL
(MOUNT ON SPILL BOX)
SCALE: 1:5

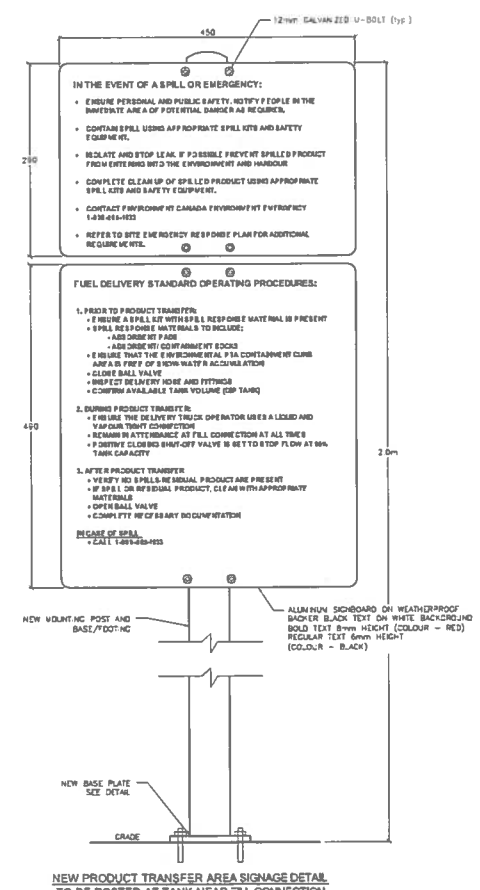

NEW PRODUCT TRANSFER AREA SIGNAGE DETAIL
TO BE POSTED AT TANK NEAR FILL CONNECTION
SCALE: 1:3

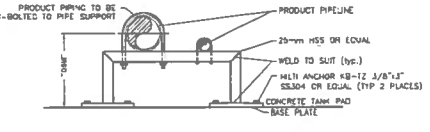

PIPE SUPPORT DETAIL
SCALE: N.T.S.

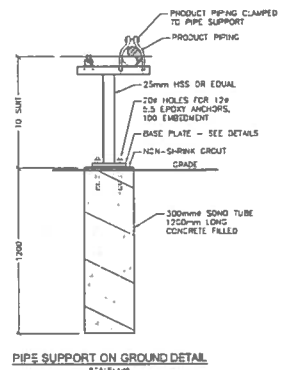

PIPE SUPPORT ON GROUND DETAIL
SCALE: 1:10

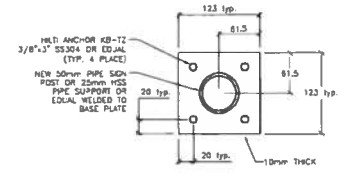

NEW SIGNAGE AND PIPE SUPPORT BASE PLATE DETAIL
SCALE: 1:3

PRODUCT TRANSFER AREA:

THIS DESIGN HAS BEEN DEVELOPED TO MEET THE INTENT OF A "PRODUCT TRANSFER AREA METHOD", WHICH HAS IDENTIFIED POTENTIAL ENVIRONMENTAL RISK, POTENTIAL SPILL SCENARIOS AND RISK MITIGATION ACTIONS AND OVERFILL PREVENTION FEATURES/EQUIPMENT IN CONJUNCTION WITH SPILL CONTAINMENT BEYOND THE FILL CONNECTION SPILL CONTAINMENT, SIZED TO CONTAIN THE LIKELY SPILL SCENARIOS VOLUMES. A PRODUCT TRANSFER AREA METHOD IS FURTHER DESCRIBED IN ENVIRONMENT CANADA COMPLIANCE PROMOTIONS "PRODUCT TRANSFER AREA WORKSHOP -- INFO SHEET AND SAMPLE WRITE-UPS FOR PRODUCT TRANSFER AREAS", FEBRUARY 3, 2012.

PRODUCT TRANSFER AREA NOTE:

THE EXISTING CONCRETE TANK PAD HAS BEEN MODIFIED WITH A CONCRETE PERIMETER CURB TO PROVIDE APPROXIMATELY 2200 LITRES OF CONTAINMENT IN THE AREA IMMEDIATELY SURROUNDING THE STORAGE TANK. FURTHERMORE, THE SYSTEM OWNER HAS IMPLEMENTED INDUSTRY ACCEPTED OVERFILL PREVENTION DEVICES TO ALERT DELIVERY PERSONNEL WHEN THE TANK IS APPROACHING FULL CAPACITY.

THE NEW SYSTEM IS EQUIPPED WITH:

1. A POSITIVE CLOSING SHUT OFF VALVE, INSTALLED IN THE FILL PIPE, TO STOP THE FLOW OF FUEL INTO THE TANK ONCE THE VOLUME HAS REACH 95% CAPACITY.

A FULLY STOCKED SPILL KIT IS PROVIDED AT THE STORAGE TANK SYSTEM. ADDITIONAL SAFETY SIGNAGE, COMPLETE WITH EMERGENCY CONTACT INFORMATION, HAS BEEN POSTED. AN EMERGENCY PLAN HAS BEEN COMPLETED AND HAS BEEN POSTED.

Stantec Consulting Limited © 2015

STAMP

STATE OF NOVA SCOTIA
REGISTERED PROFESSIONAL ENGINEER
10124

STAMP

NOTE: THIS DRAWING ILLUSTRATES INFORMATION SPECIFIC TO A STANTEC CONSULTING LIMITED PROJECT AND MUST NOT BE USED FOR OTHER PURPOSES.

DWG. NO.	DESCRIPTION	DATE
–	ISSUED FOR TENDER	15 12 07
–	ISSUED FOR CLIENT REVIEW	15 11 26

APP'D	NO.	DETAILS	DATE

REVISIONS

REFERENCES

PROJECT:
JET A1 DISPENSING SYSTEM REPLACEMENT

SITE ADDRESS:
CCG HANGAR SHEARWATER
12 WING SHEARWATER, DARTMOUTH NS

CLIENT:
DFO RPSS

JOB No.:	SCALE:	DATE:
12-511747	1:200	15/11/20
DRAWN BY: JCB	DESIGNED BY: ERF	APPROVED BY: DT

DRAWING TITLE:
PHASE 1
NEW JET A1 TANK PLAN, ELEVATION & GENERAL ARRANGEMENT

DRAWING No.	REVISION No.
03	-

Stantec

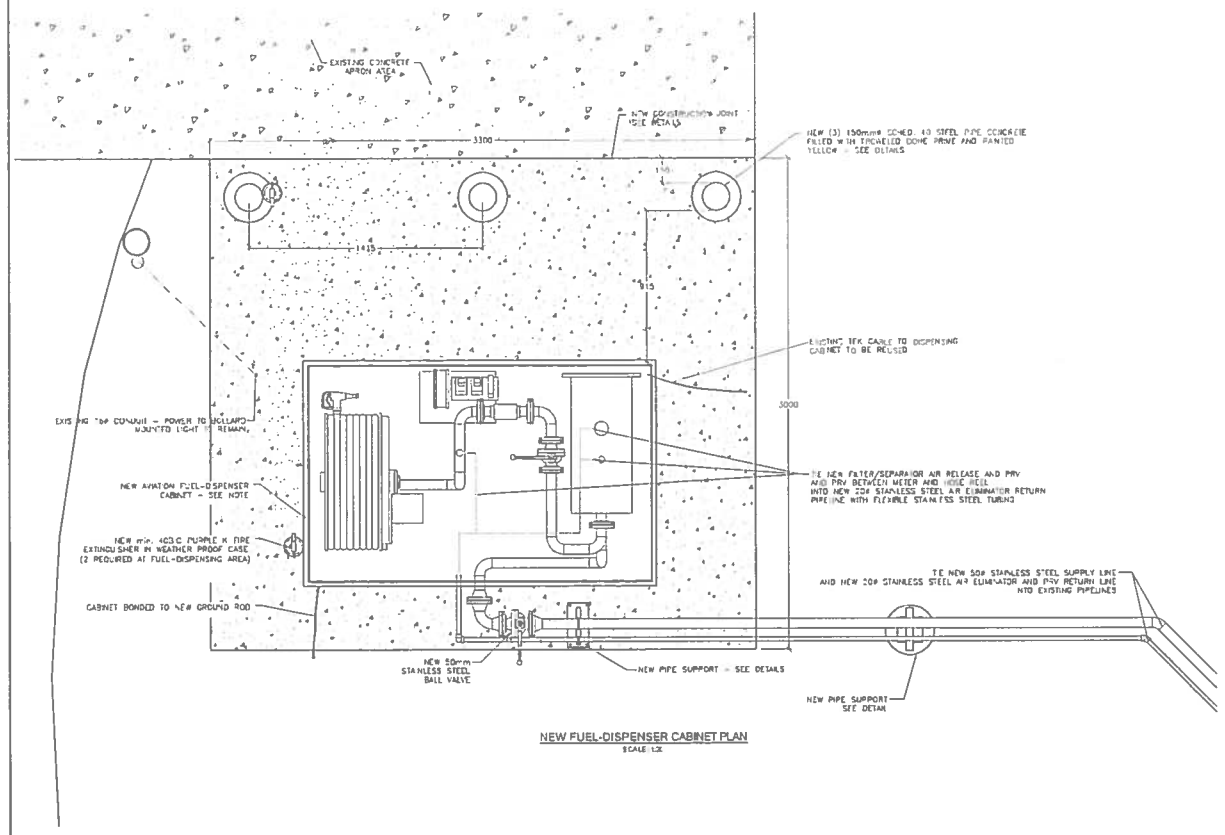

NEW FUEL-DISPENSER CABINET PLAN
SCALE: 1:20

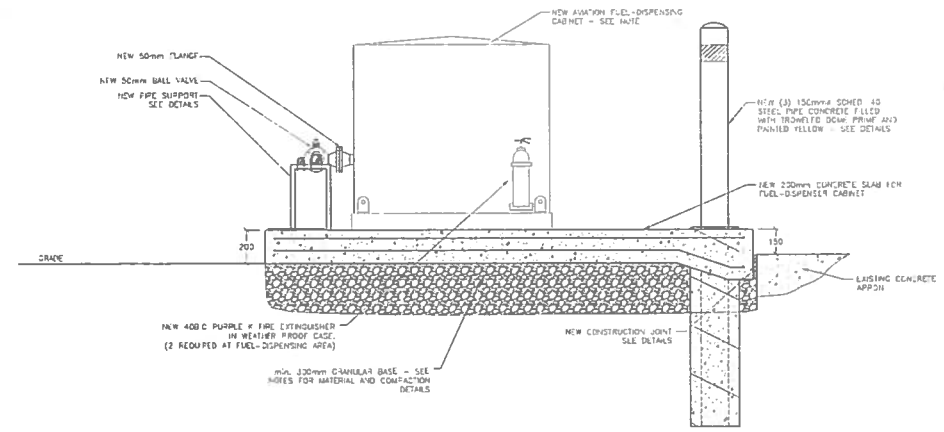

NEW FUEL-DISPENSER CABINET ELEVATION
SCALE: 1:20

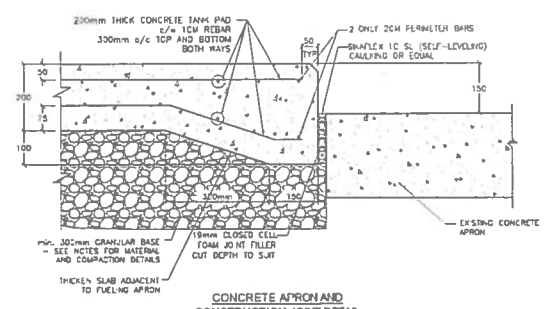

CONCRETE APRON AND CONSTRUCTION JOINT DETAIL
SCALE: 1:10

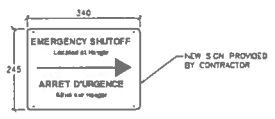

NEW EMERGENCY SHUTOFF SIGNAGE DETAIL TO BE INSTALLED AT FUEL-DISPENSING CABINET
SCALE: 1:10

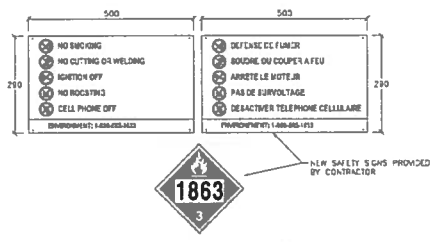

NEW SAFETY SIGNAGE TO BE INSTALLED AT FUEL-DISPENSING CABINET
SCALE: 1:10

THE DISPENSING CABINET IS TO BE SHOP FABRICATED AND COME COMPLETE WITH THE FOLLOWING:

- STAINLESS STEEL CABINET CONSTRUCTION c/w REMOVABLE DOORS AND CABINET TOP
- STAINLESS STEEL PIPING AND VALVES
- SPILL CONTAINMENT DRIP PAN
- START/STOP SWITCH FOR SUBMERSIBLE PUMP/SOLENOID VALVE
- 3 STAGE JET FUEL FILTER/SEPARATOR APPROVED UNDER E11581 c/w STAINLESS STEEL OR EPOXY LINED CARBON STEEL HOUSING
- THERMAL PRESSURE RELIEF AND AIR ELIMINATOR BOTH CONNECTED TO 20ø RETURN LINE TO TANK
- METER COMPLETE WITH DIGITAL DISPLAY
- ELECTRIC REWIND HOSE REEL COMPLETE WITH 30.5m OF 1.5"ø HOSE AND OVERWING DISPENSING NOZZLE AND CONTROLS
- BONDING REEL AND CLAMP
- GAMMON PRESSURE DIFFERENTIAL GAUGE
- LOW POINT DRAIN ON FILTER SEPARATOR c/w 12ø SS PIPING, SPRING RETURN BALL VALVE, CAMLOCK AND DUST CAP
- MILLIPORE TESTING PORT ON INLET AND OUTLET OF FILTER
- 50mm SS BALL VALVE ON OUTLET OF FILTER SEPARATOR
- THERMAL PRESSURE RELIEF ON PIPING BETWEEN METER AN HOSE REEL TIED INTO 20ø SS RETURN PIPE BACK TO TANK
- 50mm SS CHECK VALVE ON INLET OF METER

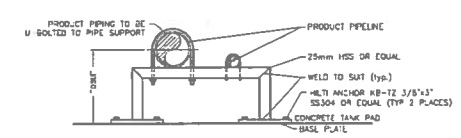

PIPE SUPPORT DETAIL
SCALE: N.T.S.

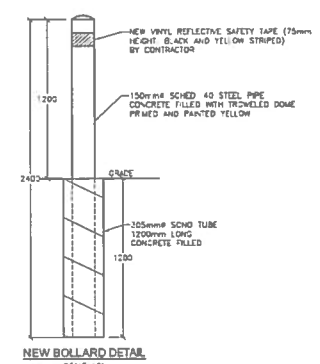

NEW BOLLARD DETAIL
SCALE: 1:20

NOTES:

1) INSTALLER TO VERIFY LOCATION OF ALL PROPERTY BOUNDARIES, STRUCTURES, UTILITIES, ROADS/DRIVEWAYS, WELLS, WATERCOURSES AND WATERFOWLS BEFORE BEGINNING OF WORK.

2) INSTALLER TO ADVISE ENGINEER OF ANY ABNORMALITIES OR CHANGES TO SITE PLAN RESULTING FROM NOTE 1 PRIOR TO BEGINNING OF WORK.

3) ALL INSTALLATIONS SHALL COMPLY WITH FEDERAL REGULATIONS, THE NATIONAL FIRE CODE OF CANADA, THE CANADIAN ELECTRICAL CODE, STORAGE, DISTRIBUTION, HANDLING AND DISPENSING OF AVIATION FUELS AT AERODROMES CDM*, AS WELL AS ANY OTHER GOVERNING CODES AND INSTALLATION PRACTICES.

4) THE EMERGENCY STOP BUTTONS SHALL SHUT DOWN ALL PUMPS TO THE SUBMERSIBLE PUMP, CABINET & SOLENOID VALVE PRESSED.

5) THE EMERGENCY STOP BUTTON MUST BE REMOTELY LOCATED, c/w SIGNAGE (7-30m FROM THE DISPENSING AREA) (CLEARLY VISIBLE FROM FUEL DISPENSING AREA).

6) CONTRACTOR TO VERIFY INTEGRITY OF TANK INTERSTITIAL VACUUM PRIOR TO INSTALLATION.

7) SYSTEM OWNER TO ENSURE MEASURES ARE TAKEN TO PREVENT UNAUTHORIZED ACCESS TO THE STORAGE TANK AND ASSOCIATED EQUIPMENT.

8) ALL NEW EQUIPMENT SHALL BE ULC LISTED AND INSTALLED AS PER MANUFACTURER'S INSTRUCTIONS.

9) OWNER IS RESPONSIBLE TO ENSURE AN APPROPRIATE EMERGENCY PLAN IS IMPLEMENTED TO MEET THE REQUIREMENTS OF THE CANADIAN ENVIRONMENTAL PROTECTION ACT, STORAGE TANK SYSTEMS FOR PETROLEUM PRODUCTS AND ALLIED PETROLEUM PRODUCTS REGULATIONS, 2008 (CEPA) SECTIONS 37-22.

10) PRIOR TO OPERATION, AS BUILT DRAWINGS BEARING AN ENGINEER'S STAMP MUST BE COMPLETED.

11) SPILL KIT AND/OR ABSORBENT MATERIAL REQUIRED AT FUEL-DISPENSING AREA.

12) CONCRETE SPECIFICATIONS:
SOIL BEARING CAPACITY: 150kpa min.
CONCRETE STRENGTH: 35MPa @ 28 DAYS, 5% TO 8% AIR ENTRAINING
FINISH: BROOM, ADD ONE COAT SEALING/CURING COMPOUND. ALL OUTSIDE EDGES OF CONCRETE TO BE TOOLED A MINIMUM OF 38mm WIDE.
REBAR: 10DWPA

13) DO NOT UNDERMINE OR COMPROMISE ANY FOOTINGS OR FOUNDATION STRUCTURES. ALWAYS BE AWARE OF THE LOCATION OF EXISTING UTILITIES AND OVERHEAD POWER LINES.

14) EXCAVATION TO BE BACKFILLED WITH 31.5mm CRUSHED GRAVEL.

15) ALL FILL MUST BE PLACED IN LIFTS NOT EXCEEDING 200mm IN LOOSE THICKNESS, AND BE COMPACTED THROUGHOUT THE LIFT THICKNESS TO A MAXIMUM OF THE MATERIAL'S MODIFIED PROCTOR MAXIMUM DRY DENSITY. DEPENDING ON THE COMPACTION EQUIPMENT, THINNER LIFTS MAY BE NECESSARY IN ORDER TO ACHIEVE THE SPECIFIED COMPACTION CRITERIA.

16) IF FURTHER CLARIFICATIONS ARE REQUIRED ON EQUIPMENT OR THE INSTALLATION OF EQUIPMENT, IT IS THE CONTRACTORS RESPONSIBILITY TO REQUEST CLARIFICATIONS FROM THE CONSULTANT.

17) THESE DRAWINGS TO BE USED FOR GENERAL GUIDANCE SHOWING APPROXIMATE EQUIPMENT ARRANGEMENT ONLY.

18) THE SYSTEM IS REQUIRED TO BE EQUIPPED WITH THE FOLLOWING FEATURES:
- OVERFILL PREVENTION VALVE
- ANTI-SIPHON DEVICE OR N.C. SOLENOID VALVE c/w THERMAL RELIEF
- SPILL CONTAINMENT BOX
- PTA CONTAINMENT CURB
- EMERGENCY SHUT-OFF DEVICE FOR ALL POWER TO SYSTEM
- 2 x 4Q3-C FIRE EXTINGUISHERS (PURPLE K PREFERRED)
- FULLY STOCKED SPILL KIT
- EMERGENCY AND SAFETY SIGNAGE

19) ENVIRONMENT CANADA NUMBER REQUIRED TO BE POSTED AT THE FILL PIPE CONNECTION OF EACH STORAGE TANK.

20) OWNER MUST NOTIFY ENVIRONMENT CANADA WITHIN 60 DAYS ONCE REGULATED SYSTEMS ARE REMOVED (CEPA SECTION 44)

STAMP

STAMP

SIZE: THIS DRAWING ILLUSTRATES INFORMATION SPECIFIC TO A STANTEC CONSULTING LIMITED PROJECT AND MUST NOT BE USED FOR OTHER PURPOSES.

APP'D	NO.	DETAILS	DATE
–	–	ISSUED FOR TENDER	15 12 07
–	–	ISSUED FOR CLIENT REVIEW	15 11 26

REVISIONS

DWG. NO	DESCRIPTION	DATE

REFERENCES

PROJECT: JET A1 DISPENSING SYSTEM REPLACEMENT

SITE ADDRESS: CCG HANGAR SHEARWATER, 12 WING SHEARWATER, DARTMOUTH NS

CLIENT: DFO RPSS

JOB No.:	SCALE:	DATE:
121611747	AS NOTED	15/11/23
DRAWN BY: JCB	DESIGNED BY: ERF	APPROVED BY: DT

DRAWING TITLE:
PHASE 2
NEW FUEL-DISPENSER CABINET PLAN, ELEVATION & GENERAL ARRANGEMENT

DRAWING No.	REVISION No.	
04	-	Stantec

Stantec Consulting Limited © 2015