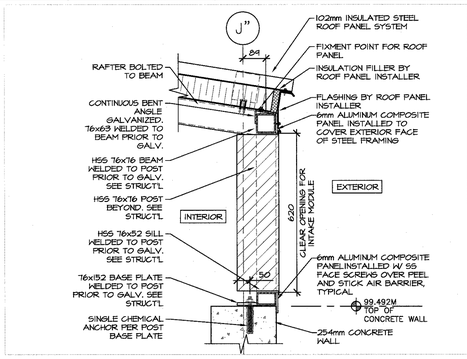

SECTION @ HEAD OF STAIR 7 A4 A4

SCALE/ÉCHELLE: 1:10

0mm 100 200 300 400 500 600 700 800 900 1000mm

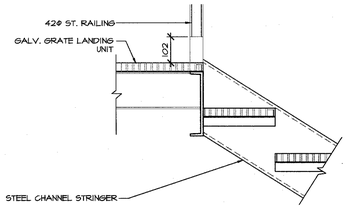

SECTION @ HEAD OF STAIR 3 A4 A4

SCALE/ÉCHELLE: 1:10

0mm 100 200 300 400 500 600 700 800 900 1000mm

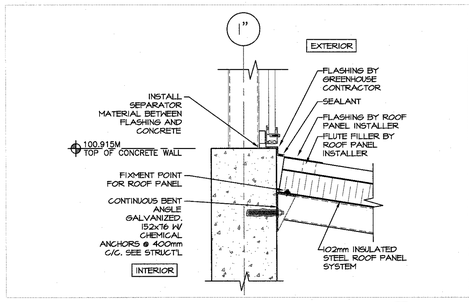

SECTION @ HEAD OF STAIR 8 A4 A4

SCALE/ÉCHELLE: 1:10

0mm 100 200 300 400 500 600 700 800 900 1000mm

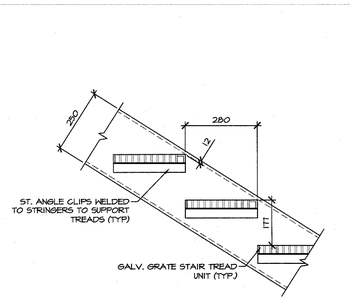

TREAD DETAIL 4 A4 A4

SCALE/ÉCHELLE: 1:10

0mm 100 200 300 400 500 600 700 800 900 1000mm

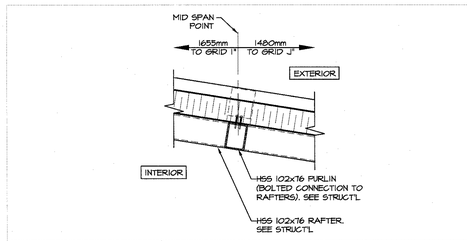

SECTION @ HEAD OF STAIR 9 A4 A4

SCALE/ÉCHELLE: 1:10

0mm 100 200 300 400 500 600 700 800 900 1000mm

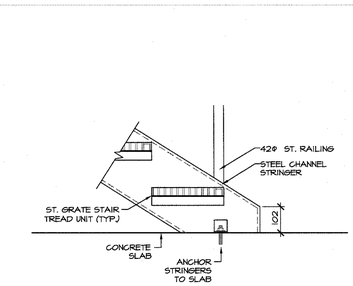

DETAIL @ BASE OF STAIR 5 A4 A4

SCALE/ÉCHELLE: 1:10

0mm 100 200 300 400 500 600 700 800 900 1000mm

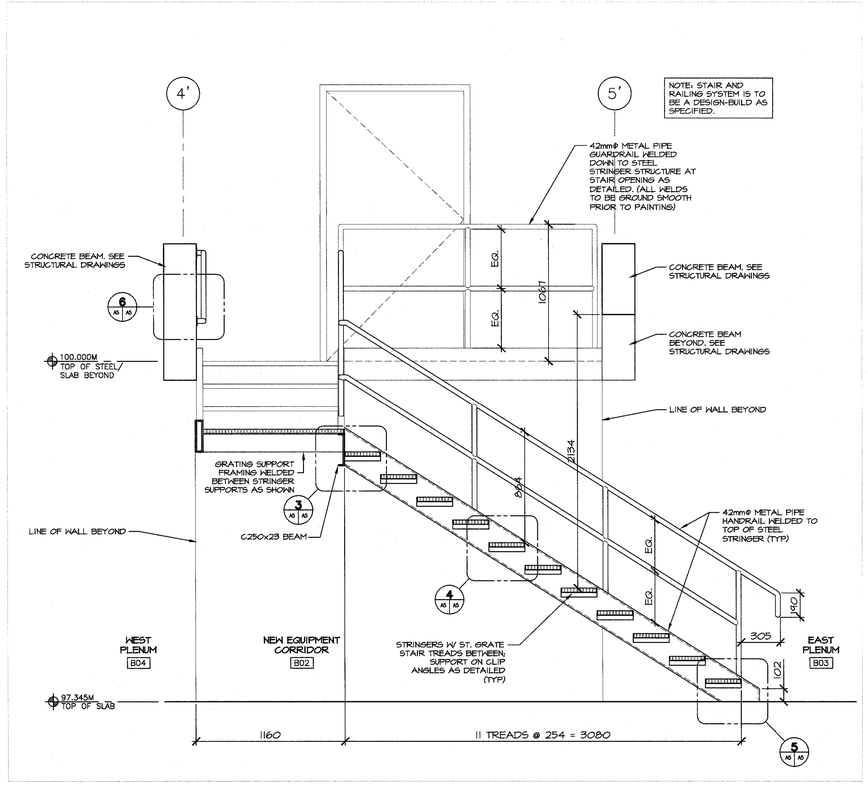

SECTION @ STAIR 1 A2 A4

SCALE/ÉCHELLE: 1:20

0mm 500mm 1000mm 1500mm 2000mm 2500mm

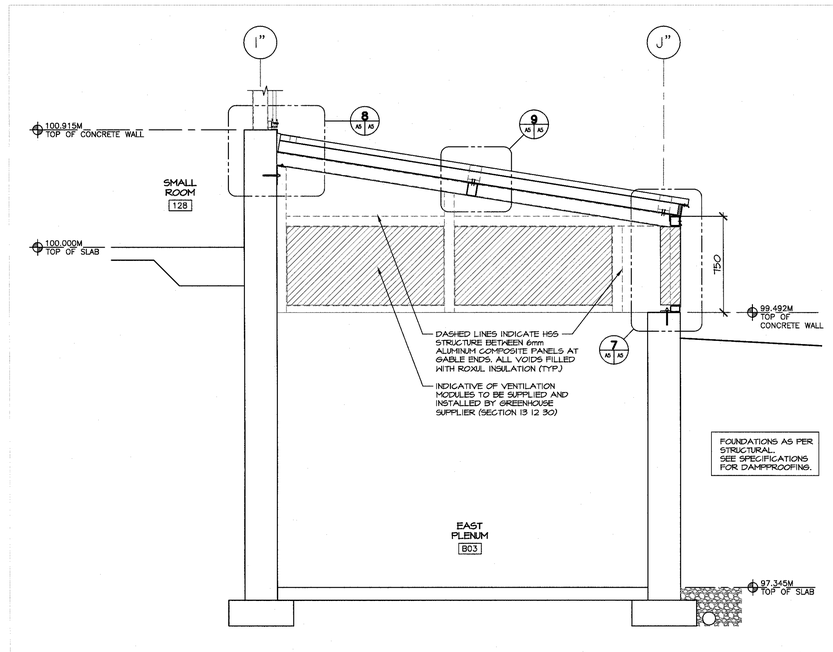

BUILDING SECTION 2 A2 A4

SCALE/ÉCHELLE: 1:20

0mm 500mm 1000mm 1500mm 2000mm 2500mm

NOTE: THE DOORS, FRAME & HARDWARE SHOWN IN THIS DETAIL ARE TO REPLACE THE EXISTING WITHOUT MODIFICATION OF THE EXISTING ROUGH OPENING

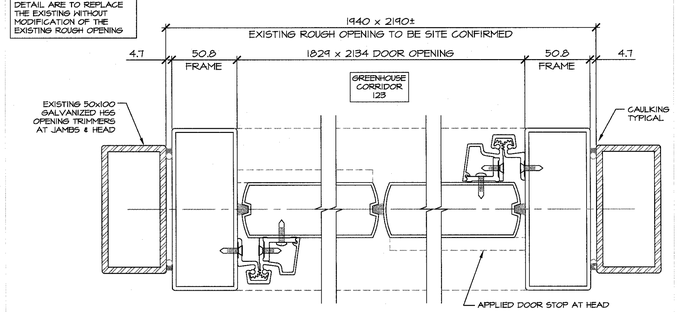

NOTE: HARDWARE FOR DOORS TO NEW GREENHOUSE ROOMS AND FOR DOORS AT STAIR SEE HARDWARE SCHEDULE - SECTION 08 71 00 (SPECIFICATIONS)

SUMMARY OF COMPONENTS BY HARDWARE SUPPLIER (SECTION 08 71 00) - SEE SPECIFICATIONS.

- ROTON 180-300HD HEAVY-DUTY-HALF SURFACE HINGES
- SARGENT 18U81G F 32D TOP LATCH SURFACE VERTICAL ROD EXIT DEVICES
- SARGENT 1431 H EN TOP JAMB MOUNTED CLOSERS WITH HOLD OPEN ARMS
- STANDARD METAL S102 L 26D FLOOR STOPS
- KN GRONDER GT-65 ALUMINUM SILL
- KN GRONDER W-245 SURFACE MOUNTED SWEEPS

SUMMARY OF COMPONENTS BY GREENHOUSE SUPPLIER (SECTION 13 12 30) - SEE SPECIFICATIONS.

- CENTER HINGS ALUMINUM DOORS C/W MOHAIR PILE WEATHER SEALS
- 50.8 X 127 ALUMINUM TUBE FRAME
- TWO-PIECE APPLIED DOOR STOPS (SIMILAR TO ALUMCOR 4300 DOOR STOP BASE +4310 DOOR STOP CAP + MOHAIR PILE WEATHER SEAL. SUPPLIER/INSTALLER TO CAP EXPOSED ENDS OF STOPS TYPICAL.

DOOR 123 HARDWARE DETAIL 10 A4 A4

SCALE/ÉCHELLE: 1:2

0mm 50mm 100mm 150mm 200mm 250mm

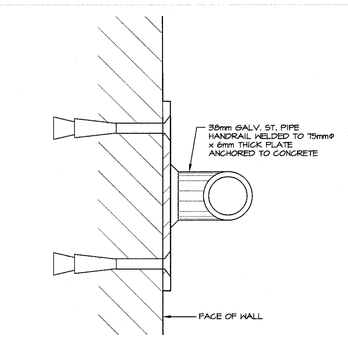

HANDRAIL DETAIL 6 A4 A4

SCALE/ÉCHELLE: 1:2

0mm 50mm 100mm 150mm 200mm 250mm

Public Works and Government Services Canada / Travaux Publics et Services gouvernementaux Canada

DESIGN BUILDER:

ARCHITECT:

ARCHITECTURE 49

1-1410 MOUNT EDWARD ROAD
CHARLOTTETOWN PE CANADA C1E 2A1
TEL: 902-367-4646 | FAX: 902-367-4647 | ARCHITECTURE49.COM

ARCHITECTS ASSOCIATION 15-03 CERTIFICATE OF PRACTICE M. D. Ross MacIntosh Architecture49 AAPEI OF PRINCE EDWARD ISLAND

revisions		date
01	Issued for Tender	11/04/15

project / projet: AAFC GREENHOUSE EXPANSION HARRINGTON RESEARCH FARM HARRINGTON, PEI

drawing / dessin: BUILDING SECTIONS AND DETAILS

designed / conçu:
date:
drawn / dessiné: TL
date: OCT. 14, 2015
approved / approuvé:
date:
Tender / Soumission:
PWGSC Project Manager / Administrateur de projets TPSGC:
project number / no. du projet: R.072545.001
drawing no. / no. du dessin: A4 of 4