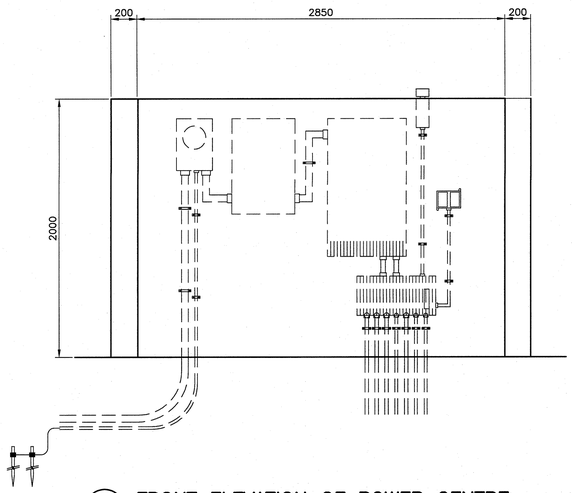

2 / 7 7 FRONT ELEVATION OF POWER CENTRE

SCALE : 1:20

0mm 500mm 1000mm 1500mm 2000mm 2500mm

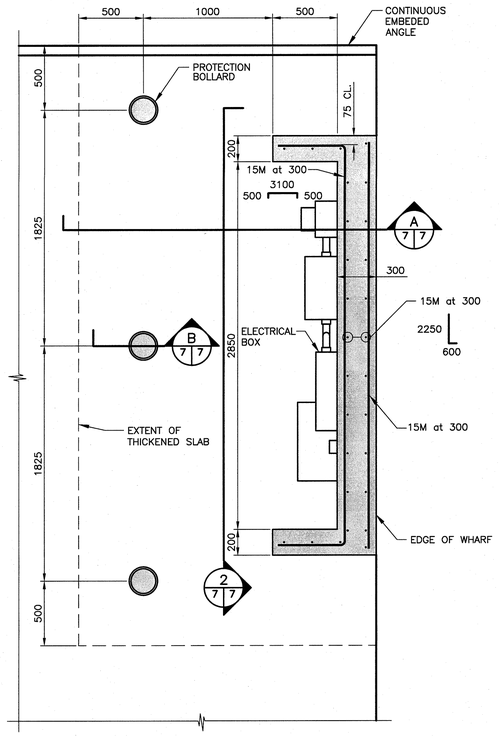

1 / 1 7 POWER CENTRE DETAIL

SCALE : 1:20

0mm 500mm 1000mm 1500mm 2000mm 2500mm

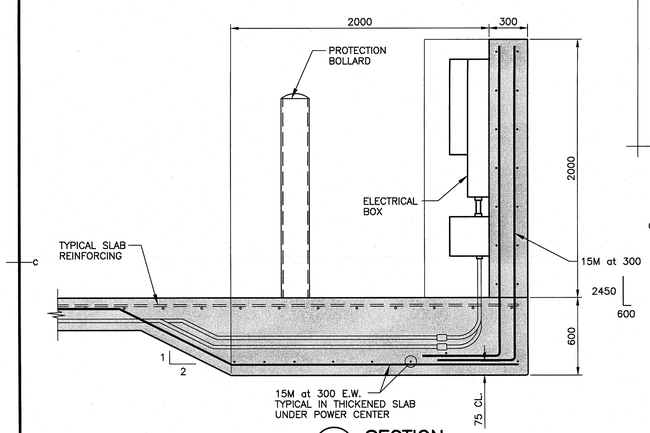

A / 7 7 SECTION

SCALE : 1:20

0mm 500mm 1000mm 1500mm 2000mm 2500mm

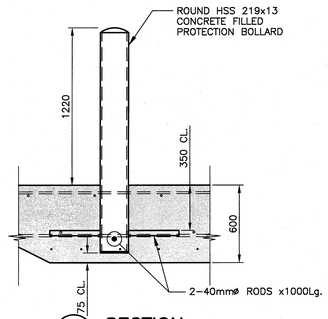

B / 7 7 SECTION

SCALE : 1:20

0mm 500mm 1000mm 1500mm 2000mm 2500mm

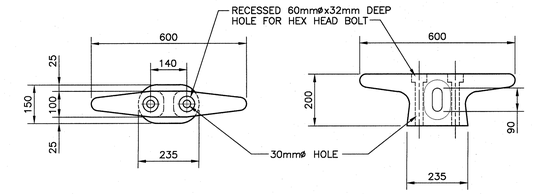

PLAN ELEVATION

4 / 3 7 MOORING CLEAT DETAIL

SCALE : 1:10

0mm 100 200 300 400 500 600 700 800 900 1000mm

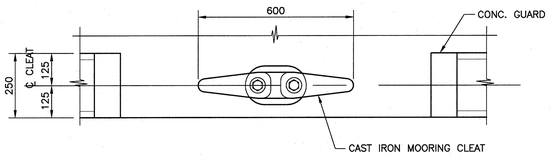

PLAN

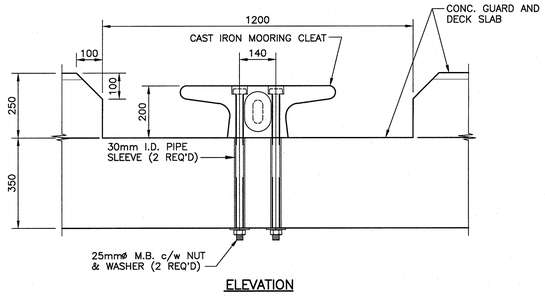

ELEVATION

MOORING CLEAT INSTALLATION DETAIL

MOORING CLEATS TO BE CENTRED BETWEEN TIMBER FENDER PILES AS SHOWN ON DRAWING S3.

SCALE : 1:10

0mm 100 200 300 400 500 600 700 800 900 1000mm

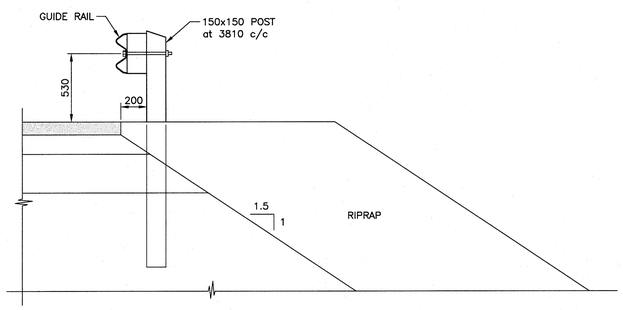

C / 1 7 SECTION

SCALE : 1:20

0mm 500mm 1000mm 1500mm 2000mm 2500mm

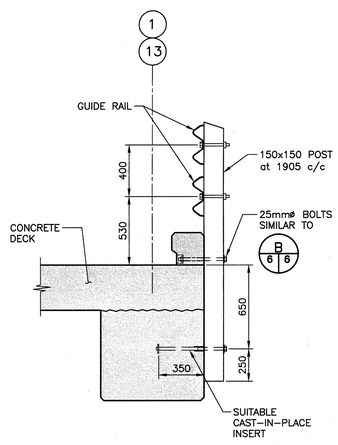

D / 1 7 SECTION

SCALE : 1:20

0mm 500mm 1000mm 1500mm 2000mm 2500mm

Public Works and Government Services Canada / Travaux Publics et Services gouvernementaux Canada

EASTERN DESIGNERS & COMPANY LIMITED
Engineering Consultants
564 Prospect Street, PO Box 613
Fredericton, NB, Canada, E3B 5A6
T: (506) 452-8480
info@easterndesigners.com

REGISTERED PROFESSIONAL ENGINEER
Province of New Brunswick
#M5844
Ryan DeMarchant
15/12/11
Date
Province du Nouveau Brunswick
INGENIEUR IMMATRICULE

revisions		date
0	ISSUED FOR TENDER	DEC 11 2015

project / projet

HARBOUR IMPROVEMENTS

BACK BAY

CHARLOTTE CO., N.B.

drawing / dessin

MISCELLANEOUS DETAILS – 2

designed / conçu: RSD
date: DECEMBER 11, 2015
drawn / dessiné: JKL
date: DECEMBER 11, 2015
approved / approuvé
date: Jan. 25/16
Tender / Soumission
PWGSC Project Manager / Administrateur de projets TPSGC
2016/01/26

project number / no. du projet: R.076185.001

drawing no. / no. du dessin: S7 of 7

PWGSC B1 (2004) 15/12/15 (10:45) 1515-S7_0.dwg

E-DRM/GDD-E: 533570