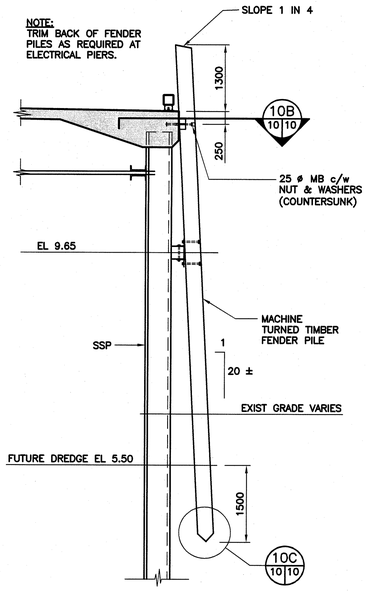

10A 5|10 FENDER PILE DETAIL

SCALE: 1:50

0m 1m 2m 3m 4m 5m

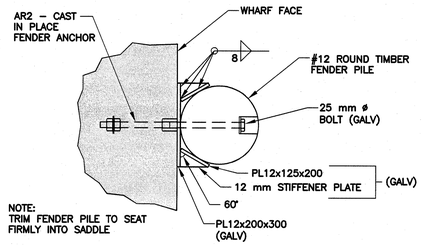

10B 10|10 FENDER PILE SADDLE DETAIL

SCALE : 1:10

0mm 100 200 300 400 500 600 700 800 900 1000mm

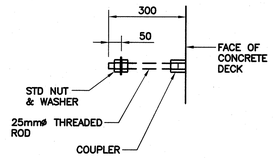

AR2 (GALV)

FENDER AND SHEATHING ANCHOR ROD DETAIL

SCALE : 1:10

0mm 100 200 300 400 500 600 700 800 900 1000mm

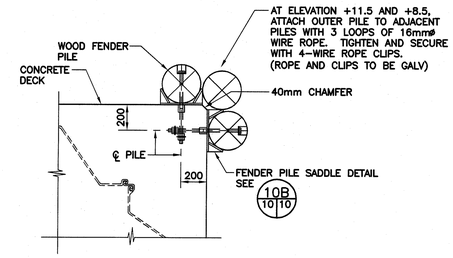

10H 5|10 PLAN DETAIL AT CORNER FENDER PILES

SCALE : 1:20

0mm 500mm 1000mm 1500mm 2000mm 2500mm

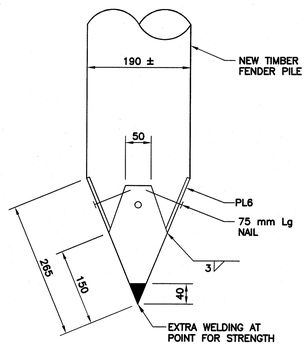

10C 10|10 PILE SHOE DETAIL

NOT TO SCALE

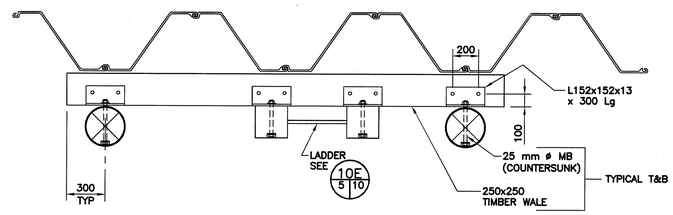

10D 5|10 SECTION

SCALE : 1:20

0mm 500mm 1000mm 1500mm 2000mm 2500mm

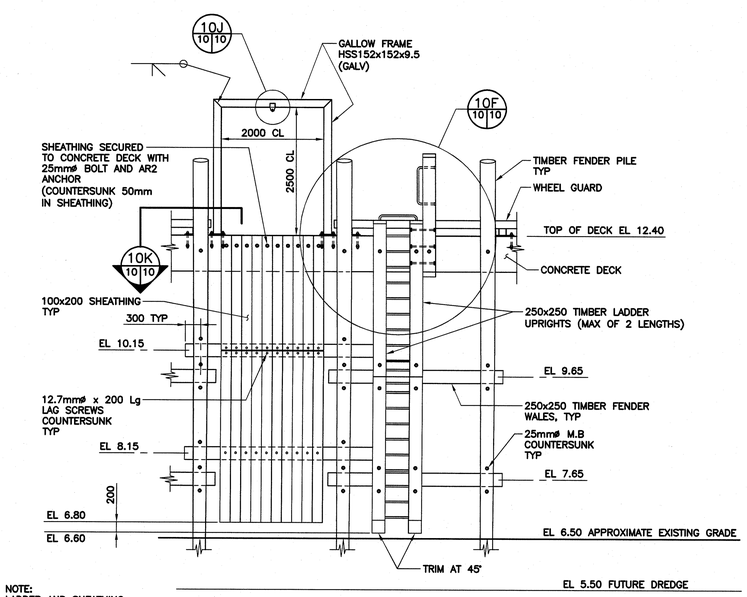

NOTE:
LADDER AND SHEATHING LOCATIONS MAY REQUIRE LOCAL EXCAVATION TO FACILITATE INSTALLATION

10E 5|10 TYPICAL LADDER & SHEATHING DETAIL

SCALE: 1:50

0m 1m 2m 3m 4m 5m

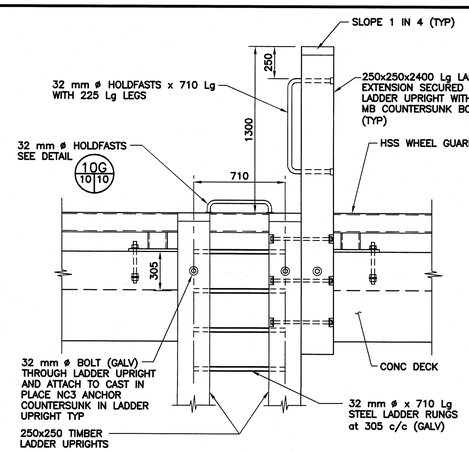

10F 10|10 TYPICAL LADDER DETAIL

SCALE : 1:20

0mm 500mm 1000mm 1500mm 2000mm 2500mm

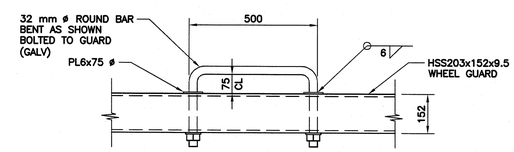

10G 10|10 DETAIL

SCALE : 1:10

0mm 100 200 300 400 500 600 700 800 900 1000mm

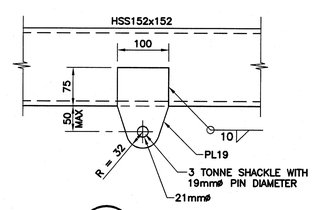

10J 10|10 DETAIL

SCALE: 1:5

0mm 100mm 200mm 300mm 400mm 500mm

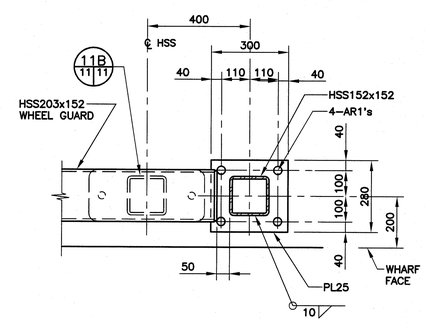

10K 10|10 PLAN DETAIL

SCALE : 1:10

0mm 100 200 300 400 500 600 700 800 900 1000mm

Public Works and Government Services Canada / Travaux Publics et Services gouvernementaux Canada

EASTERN DESIGNERS & COMPANY LIMITED
Engineering Consultants
564 Prospect Street, PO Box 613
Fredericton, NB, Canada, E3B 5A6
T: (506) 452-8480
info@easternd esigners.com

REGISTERED PROFESSIONAL ENGINEER
#M5844
Ross Dalhousie Sutherland
16/02/04
INGÉNIEUR IMMATRICULÉ

revisions		date
0	ISSUED FOR TENDER	FEB 4 2016

project / projet
EXTENSION OF EXISTING WHARF
ALMA WHARF
ALBERT COUNTY, NB

drawing / dessin
DETAILS – 5

designed RSD / conçu
date 2016/02/04
drawn BJC & TWW / dessiné
date 2016/02/04
approved RSD / approuvé
date 2016/02/04
Tender / Soumission
PWGSC Project Manager / Administrateur de projets TPSGC
project number / no. du projet
R.075081.001
drawing no. / no. du dessin
10 of 11

16/02/02 (15:56) 1516-10_C.dwg

PWGSC B1 (2004)

E-DRM/GDD-E: #518340 Version 1