Public Works and Government Services Canada | Travaux publics et Services gouvernementaux Canada

RETURN BIDS TO:
RETOURNER LES SOUMISSIONS À:

Bid Receiving - PWGSC / Réception des soumissions - TPSGC
11 Laurier St./ 11, rue Laurier
Place du Portage, Phase III
Core 0B2 / Noyau 0B2
Gatineau, Québec K1A 0S5
Bid Fax: (819) 997-9776

REQUEST FOR PROPOSAL
DEMANDE DE PROPOSITION

Proposal To: Public Works and Government Services Canada

We hereby offer to sell to Her Majesty the Queen in right of Canada, in accordance with the terms and conditions set out herein, referred to herein or attached hereto, the goods, services, and construction listed herein and on any attached sheets at the price(s) set out therefor.

Proposition aux: Travaux Publics et Services Gouvernementaux Canada

Nous offrons par la présente de vendre à Sa Majesté la Reine du chef du Canada, aux conditions énoncées ou incluses par référence dans la présente et aux annexes ci-jointes, les biens, services et construction énumérés ici sur toute feuille ci-annexée, au(x) prix indiqué(s).

Comments - Commentaires

Vendor/Firm Name and Address
Raison sociale et adresse du fournisseur/de l'entrepreneur

Issuing Office - Bureau de distribution

Clothing and Textiles Division / Division des vêtements et des textiles
11 Laurier St./ 11, rue Laurier
6A2, Place du Portage
Gatineau, Québec K1A 0S5

Title - Sujet
CONVERGED COMBAT RAINSUITS

Solicitation No. - N° de l'invitation	**Date**
W8486-163089/A	2016-02-16

Client Reference No. - N° de référence du client
W8486-163089

GETS Reference No. - N° de référence de SEAG
PW-$$PR-707-70195

File No. - N° de dossier	**CCC No./N° CCC - FMS No./N° VME**
pr707.W8486-163089	

Solicitation Closes - L'invitation prend fin
at - à 02:00 PM
on - le 2016-04-01

Time Zone
Fuseau horaire
Eastern Standard Time
EST

F.O.B. - F.A.B. Specified Herein - Précisé dans les présentes
Plant-Usine: ☐ **Destination:** ☐ **Other-Autre:** ☑

Address Enquiries to: - Adresser toutes questions à:	**Buyer Id - Id de l'acheteur**
Elder, Sylvie	pr707

Telephone No. - N° de téléphone	**FAX No. - N° de FAX**
(873) 469-3172 ( )	(819) 956-5454

Destination - of Goods, Services, and Construction:
Destination - des biens, services et construction:
DEPARTMENT OF NATIONAL DEFENCE
25 CFSD MONTREAL
6363 RUE NOTRE DAME ST E.
MONTREAL
Quebec
H1N2E9
Canada

Instructions: See Herein

Instructions: Voir aux présentes

Delivery Required - Livraison exigée	**Delivery Offered - Livraison proposée**
See Herein	

Vendor/Firm Name and Address
Raison sociale et adresse du fournisseur/de l'entrepreneur

Telephone No. - N° de téléphone
Facsimile No. - N° de télécopieur

Name and title of person authorized to sign on behalf of Vendor/Firm (type or print)
Nom et titre de la personne autorisée à signer au nom du fournisseur/ de l'entrepreneur (taper ou écrire en caractères d'imprimerie)

Signature **Date**

Canada

TABLE OF CONTENTS

LIST OF ANNEXES

PART 1 - GENERAL INFORMATION

1.1 Security Requirement

There is no security requirement associated with this bid solicitation.

1.2 Requirement

The “Requirement” is detailed under Annex A of the resulting contract clauses.

1.3 Debriefings

Bidders may request a debriefing on the results of the bid solicitation process. Bidders should make the request to the Contracting Authority within 15 working days from receipt of the results of the bid solicitation process. The debriefing may be in writing, by telephone or in person.

1.4 Trade Agreements

The requirement is subject to the provisions of the Agreement on Internal Trade (AIT).

1.6 Canadian Content

The requirement is limited to Canadian goods and/or services.

PART 2 - BIDDER INSTRUCTIONS

2.1 Standard Instructions, Clauses and Conditions

All instructions, clauses and conditions identified in the bid solicitation by number, date and title are set out in the *Standard Acquisition Clauses and Conditions Manual* (https://buyandsell.gc.ca/policy-and-guidelines/standard-acquisition-clauses-and-conditions-manual) issued by Public Works and Government Services Canada.

Bidders who submit a bid agree to be bound by the instructions, clauses and conditions of the bid solicitation and accept the clauses and conditions of the resulting contract.

The 2003 (2015/07/03) Standard Instructions - Goods or Services - Competitive Requirements, are incorporated by reference into and form part of the bid solicitation.

Subsection 5.4 of 2003, Standard Instructions - Goods or Services - Competitive Requirements, is amended as follows:

Delete: 60 days
Insert: 120 days

2.1.1 SACC Manual clauses

A9130T 2014/11/27 Controlled Goods Program - Bid

2.2 Submission of Bids

Bids must be submitted only to Public Works and Government Services Canada (PWGSC) Bid Receiving Unit by the date, time and place indicated on page 1 of the bid solicitation.

2.3 Enquiries - Bid Solicitation

All enquiries must be submitted in writing to the Contracting Authority no later than seven (7) calendar days before the bid closing date. Enquiries received after that time may not be answered.

Bidders should reference as accurately as possible the numbered item of the bid solicitation to which the enquiry relates. Care should be taken by Bidders to explain each question in sufficient detail in order to

enable Canada to provide an accurate answer. Technical enquiries that are of a proprietary nature must be clearly marked "proprietary" at each relevant item. Items identified as "proprietary" will be treated as such except where Canada determines that the enquiry is not of a proprietary nature. Canada may edit the question(s) or may request that the Bidder do so, so that the proprietary nature of the question(s) is eliminated, and the enquiry can be answered to all Bidders. Enquiries not submitted in a form that can be distributed to all Bidders may not be answered by Canada.

2.4 Applicable Laws

Any resulting contract must be interpreted and governed, and the relations between the parties determined, by the laws in force in Ontario.

Bidders may, at their discretion, substitute the applicable laws of a Canadian province or territory of their choice without affecting the validity of their bid, by deleting the name of the Canadian province or territory specified and inserting the name of the Canadian province or territory of their choice. If no change is made, it acknowledges that the applicable laws specified are acceptable to the Bidders.

2.5 Technical Data and Samples

Technical data and sample(s) (if applicable) may be viewed (by appointment only) at the following offices:

Public Works & Government Services Canada
Supply Directorate
6th floor
1550 ave D'Estimauville
Quebec, Que. G1J 0C7
TEL: 418-649-2714
FAX: 418-648-2209
Attention: Micheline Naud (micheline.naud@tpsgc-pwgsc.gc.ca)

Public Works & Government Services Canada
Place Bonaventure, South-East Portal
800 de La Gauchetière Street West, 7th Floor
Montreal, Quebec H5A 1L6
TEL: 514-496-3404
FAX: 514-496-3822
Attention: Viviane Rouhault (viviane.rouhault@tpsgc-pwgsc.gc.ca)

Public Works & Government Services Canada
Suite 480, 33 City Centre Drive
Mississauga, Ont. L5B 2N5
TEL: 905-615-2070
FAX 905-615-2023
Attention: Hodan A. Ahmed (hodan.a.ahmed@tpsgc-pwgsc.gc.ca)

Public Works & Government Services Canada
Suite 100, 167 Lombard Avenue
P.O. Box 1408
Winnipeg, Manitoba R3C 2Z1
TEL: 204-983-3774
FAX: 204-983-7796
Attention: Bev Laurin (bev.laurin@tpsgc-pwgsc.gc.ca)

Public Works & Government Services Canada
Telus Plaza North
10025 Jasper Avenue, 5th Floor

Edmonton, AB T5J 1S6
TEL: (780) 497-3564
FAX: (780) 497-3510
Attention: Nicole Boucher (wst-pa-edm@tpsgc-pwgsc.gc.ca)

2.6 Technical Data
In order to receive Technical Data Packages against this solicitation, bidders must provide the following details with their request:

- Company Name
- Complete mailing & physical address (P.O. Box numbers not acceptable)
- Area code and telephone number
- Contact name
- E-mail address
- Solicitation Number & Closing Date

and send their request (by facsimile message or e-mail) to the following:
E-mail : sylvie.elder@tpsgc-pwgsc.gc.ca
OR
Facsimile Number: 819-956-5454

It is imperative that the request be done as soon as possible to ensure timely receipt. Notwithstanding Canada must not be held responsible for untimely release of the technical data.

2.7 Specifications and Standards

2.7.1 United States Military Specifications and Standards
The Bidder is responsible for obtaining copies of all United States (US) military specifications and standards which may be applicable to the requirement. These specifications and standards are available commercially, or may be obtained by visiting the US Department of Defense Website, at the following address**: http://assistdocs.com/search/search_basic.cfm**

2.7.2 Canadian General Standards Board (CGSB) - Standards
A copy of the CGSB Standards referred to in the bid solicitation is available and may be purchased from:

Canadian General Standards Board
Place du Portage III, 6B1
11 Laurier Street
Gatineau, Québec
Telephone: (819) 956-0425 or 1-800-665-CGSB (Canada only)
Fax: (819) 956-5740
E-mail: ncr.cgsb-ongc@pwgsc-tpsgc.gc.ca
CGSB Website: http://www.tpsgc-pwgsc.gc.ca/ongc-cgsb/index-eng.html

2.8 Transportation Costs Information
The Bidder is requested to provide the following information concerning transportation costs for the delivery of the units to destination:

(a) shipping weight by unit; _____
(b) number of items by unit; _____
(c) cubic measurement by unit; _____
(d) number of units per shipment: _____
(e) name of shipping point; _____
(f) recommended method of shipment and carrier _____

(g) Unit cost per Destination WB941: $_____ W248A: $_____
(h) Total cost $_____

PART 3 - BID PREPARATION INSTRUCTIONS

3.1 Bid Preparation Instructions

Canada requests that bidders provide their bid in separately bound sections as follows:
Section I: Technical Bid (3 hard copies)
Section II: Financial Bid (1 hard copy)
Section III: Certifications (1 hard copy)
Section IV: Additional Information (1 hard copy)

Prices must appear in the financial bid only. No prices must be indicated in any other section of the bid.

Canada requests that Bidders follow the format instructions described below in the preparation of their bid:

(a) use 8.5 x 11 inch (216 mm x 279 mm) paper;
(b) use a numbering system that corresponds to the bid solicitation;

In April 2006, Canada issued a policy directing federal departments and agencies to take the necessary steps to incorporate environmental considerations into the procurement process Policy on Green Procurement (http://www.tpsgc-pwgsc.gc.ca/ecologisation-greening/achats-procurement/politique-policy-eng.html). To assist Canada in reaching its objectives, Bidders should:

1) use 8.5 x 11 inch (216 mm x 279 mm) paper containing fibre certified as originating from a sustainably-managed forest and containing minimum 30% recycled content; and

2) use an environmentally-preferable format including black and white printing instead of colour printing, printing double sided/duplex, using staples or clips instead of cerlox, duotangs or binders.

3) Green Initiatives (for PWGSC information only)
Bidders are requested to provide details of their policies and practices in relation to the following initiatives:

- environmentally responsible manufacturing;
- environmentally responsible waste disposal;
- waste reduction;
- packaging;
- re-use strategies;
- recycling.

Section I: Technical Bid
In their technical bid, Bidders should explain and demonstrate how they propose to meet the requirements and how they will carry out the Work (reference pre-award sample, Part 4, Evaluation Procedures, 1.1.1 Mandatory Technical Criteria)

Section II: Financial Bid
Bidders must submit their financial bid in accordance with the Basis of Payment. The total amount of Applicable Taxes must be shown separately.

3.1.1 Exchange Rate Fluctuation

C3011T 2013/11/06 Exchange Rate Fluctuation

Section III: Certifications
Bidders must submit the certifications required under Part 5.

Section IV: Additional Information

3.2 Origin of Work
For each line item, bidders must identify the name(s) of the country or countries where the apparel goods are cut (or knit to shape) and sewn, regardless of whether the work is to be performed by the Bidder or one of its subcontractor(s).

The following information must be provided for each location where any of the goods are cut (or knit to shape) or sewn:

Line Item number_____
Country: _____
(Bidders must add additional lines if there is more than one manufacturer or one country per line item.)

Bidders must immediately inform Canada in writing of any and all changes affecting the information provided under this clause during the entire bid validity period.

PART 4 - EVALUATION PROCEDURES AND BASIS OF SELECTION

4.1 Evaluation Procedures

(a) Bids will be assessed in accordance with the entire requirement of the bid solicitation including the technical and financial evaluation criteria.

(b) An evaluation team composed of representatives of Canada will evaluate the bids.

4.1.1 Technical Evaluation

4.1.1.1 Mandatory Technical Criteria

Pre-Award Samples and Supporting Documentation

As part of the technical evaluation, to confirm a Bidder's capability of meeting the technical requirements, one (1) pre-award sample of the jacket in size 7040 and one (1) of the trousers in size 7034, test results ***and*** certificates of compliance must be included with the bid.

The Bidder must ensure that the required pre-award samples are manufactured in accordance with the technical requirements (Annexes B, C and are fully representative of the bid submitted. Rejection of the pre-award samples will result in the bid being declared non-responsive.

The Bidder must deliver the required pre-award samples***,*** test results ***and*** certificates of compliance at no charge to Canada and must ensure that they are received with the bid at time and place of bid closing. Failure to submit the required pre-award samples, test results ***and*** certificates of compliance within the specified time frame will result in the bid being declared non-responsive. The samples submitted by the Bidder will remain the property of Canada.

Laboratory analysis of the product offered showing test results for specific tests listed at Annex J must be provided with the pre-award sample. Testing must be performed by an independent accredited laboratory establishment and must be in accordance with the test methods detailed in

the Requirement. The laboratory report and test results must be dated within six months of the Request for Proposal posting date

In addition, Certificate of Compliance specified in Annex J are required as defined herein.

The pre-award samples will be evaluated for quality of workmanship and conformance to specified materials and measurements.

The requirement for a pre-award samples***,*** test results ***and*** certificates of compliance will not relieve the successful bidder from submitting samples, test results ***and*** certificates of compliance as required by the contract terms or from strictly adhering to the technical requirement of this Request for Proposal and any resultant contract.

In the event that a component, (ie. slide fastener, hook and loop ,cord etc. excluding the textiles identified in Annex J that require yardage/samples and testing at the pre-award stage) is not available to the Bidder in a time frame to manufacture the pre-award samples, the Bidder may use a similar substitute component. Also, the Bidder must include a letter explaining the substitution submitted with the pre-award samples, together with a statement that, should the Bidder be awarded the contract, all materials will be strictly in accordance with the technical requirement.

CERTIFICATE OF COMPLIANCE-DEFINITION
A Certificate of Compliance (C of C) is a written statement from the supplier guaranteeing the compliance of the proposed product to the specification, or portion thereof, referenced. This document must be on official company stationary; it must be current; it must make reference to the applicable specification and have the original signature of the company's designated representative. The Crown reserves the right to verify the statements made in the C of C. Full test results, demonstrating the product's compliance, will be accepted in lieu of a Certificate of Compliance.

4.1.2 Financial Evaluation

4.1.2.1 Mandatory Financial Criteria

a. The Bidder must submit firm unit prices in Canadian dollars, applicable taxes are excluded, DDP (Montreal, QC.) Incoterms 2000, transportation costs included, all applicable Customs Duties and Excise taxes included.

b. The Bidder must submit firm unit pricing for all items and all destinations including options and "as and when requested" quantities. The Bidder is requested to quote firm unit pricing at no more than two decimal points.

4.1.2.2 SACC MANUAL CLAUSE
A9033T 2012/07/16 Financial Capability

4.2 Basis of Selection
A bid must comply with all requirements of the bid solicitation and meet all mandatory technical and financial evaluation criteria to be declared responsive.

The responsive bid with the lowest evaluated aggregate price will be recommended for award of a contract (1 contract only). Evaluation will be established using the firm quantities for the all items, including all destinations**,** 100% of the option quantities and 100% of the "as and when requested" quantities.

4.3 Contract Financial Security

1. If this bid is accepted, the Bidder may be required to provide contract financial security, after the bid closing date and within 10 calendar days from receipt of a written request from the Contracting Authority.
   (a) a security deposit as defined in clause “Security Deposit Definition” in the amount of up to ten percent (10%) of the contract price.

2. Security deposits in the form of government guaranteed bonds with coupons attached will be accepted only if all coupons that are unmatured, at the time the security deposit is provided, are attached to the bonds. The Contractor must provide written instructions concerning the action to be taken with respect to coupons that will mature while the bonds are pledged as security, when such coupons are in excess of the security deposit requirement.

3. If Canada does not receive the required financial security within the specified period, Canada may, as its discretion, accept another offer, issue a new bid solicitation, award a contract or reject all the bids.

4.4 Security Deposit Definition

1. "security deposit" means
   (a) a bill of exchange that is payable to the Receiver General for Canada, and certified by an approved financial institution or drawn by an approved financial institution on itself; or
   (b) a Government guaranteed bond; or
   (c) an irrevocable standby letter of credit, or
   (d) such other security as may be considered appropriate by the Contracting Authority and approved by Treasury Board;

2. "approved financial institution" means
   (a) any corporation or institution that is a member of the Canadian Payments Association;
   (b) a corporation that accepts deposits that are insured by the Canada Deposit Insurance Corporation or the “Régie de l'assurance-dépôts du Québec” to the maximum permitted by law;
   (c) a credit union as defined in paragraph 137(6) the *Income Tax Act*;
   (d) a corporation that accepts deposits from the public, if repayment of the deposits is guaranteed by Canadian province or territory; or
   (e) the Canada Post Corporation.

3. "government guaranteed bond" means a bond of the Government of Canada or a bond unconditionally guaranteed as to principal and interest by the Government of Canada that is:
   (a) payable to bearer;
   (b) accompanied by a duly executed instrument of transfer of the bond to the Receiver General for Canada in accordance with the *Domestic Bonds of Canada Regulations;*
   (c) registered in the name of the Receiver General for Canada.

4. "irrevocable standby letter of credit"
   (a) means any arrangement, however named or described, whereby a financial institution (the "Issuer"), acting at the request and on the instructions of a customer (the "Applicant"), or on its behalf,
      (i) will make a payment to or to the order of Canada, as the beneficiary;
      (ii) will accept and pay bills of exchange drawn by Canada;
      (iii) authorizes another financial institution to effect such payment, or accept and pay such bills of exchange; or
      (iv) authorizes another financial institution to negotiate, against written demand(s) for payment, provided that the conditions of the letter of credit are complied with.
   (b) must state the face amount which may be drawn against it;

(c) must state its expiry date;
(d) must provide for sight payment to the Receiver General for Canada by way of the financial institution's draft against presentation of a written demand for payment signed by the authorized departmental representative identified in the letter of credit by his/her office;
(e) must provide that more than one written demand for payment may be presented subject to the sum of those demands not exceeding the face amount of the letter of credit;
(f) must provide that it is subject to the International Chamber of Commerce (ICC) Uniform Customs and Practice (UCP) for Documentary Credits, 2007 Revision, ICC Publication No. 600. Pursuant to the ICC UCP, a credit is irrevocable even if there is no indication to that effect; and
(g) must be issued (Issuer) or confirmed (Confirmer), in either official language, by a financial institution that is a member of the Canadian Payments Association and is on the letterhead of the Issuer or Confirmer. The format is left to the discretion of the Issuer or Confirmer.

PART 5 – CERTIFICATIONS AND ADDITIONAL INFORMATION

Bidders must provide the required certifications and additional information to be awarded a contract.

The certifications provided by Bidders to Canada are subject to verification by Canada at all times. Canada will declare a bid non-responsive, or will declare a contractor in default if any certification made by the Bidder is found to be untrue whether made knowingly or unknowingly, during the bid evaluation period or during the contract period.

The Contracting Authority will have the right to ask for additional information to verify the Bidder's certifications. Failure to comply and to cooperate with any request or requirement imposed by the Contracting Authority will render the bid non-responsive or constitute a default under the Contract.

5.1 Certifications Required with the Bid

Bidders must submit the following duly completed certifications as part of their bid.

5.1.1 Declaration of Convicted Offences

As applicable, pursuant to subsection Declaration of Convicted Offences of section 01 of the Standard Instructions, the Bidder must provide with its bid, a completed Declaration Form (http://www.tpsgc-pwgsc.gc.ca/ci-if/formulaire-form-eng.html), to be given further consideration in the procurement process.

5.2 Certifications Precedent to Contract Award and Additional Information

The certifications and additional information listed below should be submitted with the bid, but may be submitted afterwards. If any of these required certifications or additional information is not completed and submitted as requested, the Contracting Authority will inform the Bidder of a time frame within which to provide the information. Failure to provide the certifications or the additional information listed below within the time frame provided will render the bid non-responsive.

5.2.1 Integrity Provisions – List of Names

Bidders who are incorporated, including those bidding as a joint venture, must provide a complete list of names of all individuals who are currently directors of the Bidder.

Bidders bidding as sole proprietorship, as well as those bidding as a joint venture, must provide the name of the owner(s).

Bidders bidding as societies, firms or partnerships do not need to provide lists of names.

5.2.2 Federal Contractors Program for Employment Equity - Bid Certification

By submitting a bid, the Bidder certifies that the Bidder, and any of the Bidder's members if the Bidder is a Joint Venture, is not named on the Federal Contractors Program (FCP) for employment equity "FCP Limited Eligibility to Bid" list (http://www.labour.gc.ca/eng/standards_equity/eq/emp/fcp/list/inelig.shtml) available from Employment and Social Development Canada (ESDC) - Labour's website.

Canada will have the right to declare a bid non-responsive if the Bidder, or any member of the Bidder if the Bidder is a Joint Venture, appears on the "FCP Limited Eligibility to Bid "list at the time of contract award.

Canada will also have the right to terminate the Contract for default if a Contractor, or any member of the Contractor if the Contractor is a Joint Venture, appears on the "FCP Limited Eligibility to Bid" list during the period of the Contract.

The Bidder must provide the Contracting Authority with a completed annex Federal Contractors Program for Employment Equity - Certification, before contract award. If the Bidder is a Joint Venture, the Bidder must provide the Contracting Authority with a completed annex Federal Contractors Program for Employment Equity - Certification, for each member of the Joint Venture.

5.2.3 Additional Certifications Precedent to Contract Award

5.2.3.1 Canadian Content Certification

5.2.3.1.1 *SACC Manual* clause A3050T (2014/11/27) Canadian Content Definition

Rules of Origin - Textiles

With reference to the Canadian Content Certification clause, item(s) on this solicitation are considered to be Canadian goods if they meet the following definition:

MODIFIED RULE OF ORIGIN FOR TEXTILES: "Textiles and textile articles classified in Chapters 50 to 60 inclusive of the Harmonized System that are woven, knitted or otherwise manufactured from yarns or fibres in Canada, and further processed in Canada by dyeing, finishing, coating or other processes as applicable, will be considered Canadian textiles. Woven fabrics of 100% cotton or of polyester and cotton blends that are dyed and finished in Canada will be considered Canadian."

Rules of Origin - Apparel

With reference to the Canadian Content Certification clause, apparel goods are considered to be Canadian goods according to the North American Free Trade Agreement Rules of Origin as follows:

Apparel goods classified in Chapters 61 and 62 of the Harmonized System that are both cut (or knit to shape) and sewn in Canada will be considered Canadian goods.

Canadian Content Certification

This procurement is limited to Canadian goods.

The Bidder certifies that:

( ) the good offered are Canadian goods as defined in paragraph 1 of clause A3050T.

Plant Location

Items will be manufactured at: _____

5.2.3.2 Sample and Production Certification

The Bidder certifies that:

( ) the manufacturer that produced the pre-award samples will remain unchanged for the pre-production samples and full production of the contract quantity.

PART 6 - RESULTING CONTRACT CLAUSES

The following clauses and conditions apply to and form part of any contract resulting from the bid solicitation.

6.1 Security Requirements

6.1.1 There is no security requirement applicable to this Contract.

6.2 Requirement

The Contractor must provide the items detailed under the “Requirement” at Annex A.

6.3 Standard Clauses and Conditions

All clauses and conditions identified in the Contract by number, date and title are set out in the *Standard Acquisition Clauses and Conditions Manual* (https://buyandsell.gc.ca/policy-and-guidelines/standard-acquisition-clauses-and-conditions-manual) issued by Public Works and Government Services Canada.

6.3.1 General Conditions

2030 (**2015/09/03**), General Conditions - Goods (Higher Complexity), apply to and form part of the Contract.

6.4 Term of Contract

6.4.1 Delivery Date

A delivery of 250-400 sets per week minimum is required.

Delivery - Firm Quantity - Phased (jackets)

The first delivery must be made within _____ calendar days from the effective date of the written notice of approval of pre-production samples. The quantity delivered must be _____ each. The balance must be delivered at the rate of _____ each weekly after the first delivery until completion of the Contract.

Delivery - Firm Quantity - Phased (trousers)

The first delivery must be made within _____ calendar days from the effective date of the written notice of approval of pre-production samples. The quantity delivered must be _____ pairs. The balance must be delivered at the rate of _____pairs weekly after the first delivery until completion of the Contract.

Delivery - Option Quantity (jackets)

The delivery of the option quantity must commence within _____ calendar days from receipt of the contract amendment and after final delivery of the contract quantity. The quantity delivered must be _____ each. The balance must be shipped at a rate of _____ each weekly after the first delivery until completion of the option quantity.

Delivery - Option Quantity (trousers)

The delivery of the option quantity must commence within _____ calendar days from receipt of the contract amendment and after final delivery of the contract quantity. The quantity delivered must be _____ pairs. The balance must be shipped at a rate of _____ pairs weekly after the first delivery until completion of the option quantity.

6.4.1.1 Delivery - Appointments

The Contractor must make deliveries to Canadian Forces (CF) Supply Depots by appointment only. The Contractor or its carrier must arrange delivery appointments by contacting the Depot Traffic Section at the appropriate location shown below. The consignee may refuse shipments when prior arrangements have not been made.

(a) 25 CF Supply Depot Montreal
Montreal, QUE.
514-252-2777, ext. 2363

6.4.1.2 Preparation for Delivery

The Contractor must prepare all items for delivery in accordance with the latest issue of the Canadian Forces Packaging Specification D-LM-008-036/SF-000, DND Minimum Requirements for Manufacturer's Standard Pack.

The Contractor must package items in quantities of up to a maximum of 100 by package.

6.4.1.3 Bulk Shipments

For bulk shipments, all cartons must be shipped on 40" x 48" pallets shrink-wrapped or equivalent with overall height not to exceed 42".

6.4.1.4 Shipping Instructions - Delivery at Destination

1. Goods must be consigned to the destination specified in the Contract and delivered:

(a) Delivered Duty Paid (DDP) Montreal, QC Incoterms 2000 for shipments from commercial contractor.

6.4.1.5 SACC Manual Clauses

D5510C	2012/07/16	Quality Assurance Authority (DND) - Canadian-based Contractor
D5540C	2010/08/16	ISO 9001:2008 - Quality Management Systems - Requirements (QAC Q)
D5606C	2012/07/16	Release Documents (DND) - Canadian-based Contractor
D6010C	2007/11/30	Palletization

6.5 Authorities

6.5.1 Contracting Authority

The Contracting Authority for the Contract is:

Sylvie.Elder
Public Works and Government Services Canada
Acquisitions Branch
Commercial and Consumer Products Directorate (CCPD)
Clothing & Textiles Division
Place du Portage, Phase III, 6A2
11 Laurier Street
Gatineau, Quebec K1A 0S5
Telephone: 873-469-3172 Facsimile: 819-956-5454
E-mail address: sylvie.elder@tpsgc-pwgsc.gc.ca

The Contracting Authority is responsible for the management of the Contract and any changes to the Contract must be authorized in writing by the Contracting Authority. The Contractor must not perform work in excess of or outside the scope of the Contract based on verbal or written requests or instructions from anybody other than the Contracting Authority.

6.5.2 Technical Authority

The Technical Authority for this Contract is:

Mailing/Shipping Address
Department of National Defence
101 Colonel By Drive
Ottawa, Ontario
K1A 0K2
Attn: DSSPM _____(to be advised at contract)

The Technical Authority is the representative of the department or agency for whom the Work is being carried out under the Contract and is responsible for all matters concerning the technical content of the Work under the Contract. Technical matters may be discussed with the Technical Authority, however the Technical Authority has no authority to authorize changes to the scope of the Work. Changes to the scope of the Work can only be made through a contract amendment issued by the Contracting Authority.

6.5.3 Procurement Authority

The Procurement Authority for the Contract is:
_____ (Name of Procurement Authority)
_____ (Title)
_____ (Organization)
_____ (Address)
Telephone: ___-___-____
Facsimile: ___-___-____
E-mail: _____.

The Procurement Authority is the representative of the department or agency for whom the Work is being carried out under the Contract. The Procurement Authority is responsible for the implementation of tools and processes required for the administration of the Contract. The Contractor may discuss administrative matters identified in the Contract with the Procurement Authority however the Procurement Authority has no authority to authorize changes to the scope of the Work. Changes to the scope of Work can only be made through a contract amendment issued by the Contracting Authority.

6.5.4 Contractor's Representative

The person responsible for:

General enquiries
Name: _____
Telephone No.: _____
Facsimile No.: _____
E-mail address: _____

Delivery follow-up
Name: _____
Telephone No.: _____
Facsimile No.: _____
E-mail address: _____

6.6 Payment

6.6.1 Basis of Payment – Firm Unit Prices

In consideration of the Contractor satisfactorily completing all of its obligations under the Contract, the Contractor will be paid firm unit price as specified in Annex A for a cost of $ (amount to be inserted at contract award). Customs duties are included and Applicable Taxes are extra.

Canada will not pay the Contractor for any design changes, modifications or interpretations of the Work, unless they have been approved, in writing, by the Contracting Authority before their incorporation into the Work.

Prices for "as and when" required"

For year 3 of the "as and when required" the Contractor agrees that he firm unit prices (increase/decrease) will be adjusted in accordance with Statistics Canada's average Consumer Price index (CPI) (all items) for municipalities in Canada for the municipality closest to the Contractor's facility. The adjustment will be made annually, based on the average of the CPI of the most recently reported twelve-month period using the firm unit prices of the previous year.

6.6.2 SACC Manual Clauses

H1001C 2008/05/12 Multiple Payments

6.7 Invoicing Instructions

1. The Contractor must submit invoices in accordance with the section entitled "Invoice Submission" of the general conditions. Invoices cannot be submitted until all work identified in the invoice is completed.

2. Invoices must be distributed as follows:
   a) One (1) copy must be forwarded to the following address :

   National Defence Headquarters
   MGen George R. Pearkes Building
   101 Colonel By Drive
   Ottawa, ON K1A 0K2
   Attn: DLP _____
   Email: _____ (to be inserted at contract award)

   (b) One (1) copy must be forwarded to the Contracting Authority identified under the section entitled "Authorities" of the Contract.

   (c) The original and one (1) copy must be forwarded to the consignee for certification and payment.

6.7.1 Release Documents - Distribution

The Contractor must prepare the release documents in a current electronic format and distribute them as follows:

(a) One (1) copy mailed to consignee marked: "Attention: Receipts Officer";
(b) Two (2) copies with shipment (in a waterproof envelope) to the consignee;

(c) One (1) copy to the Contracting Authority;
(d) One (1) copy to:

National Defence Headquarters
Mgen George R. Pearkes Building
101 Colonel By Drive
Ottawa, ON K1A OK2
Attention: _____
Email: _____ (to be inserted at contract award)

(e) One (1) copy to the Quality Assurance Representative;
(f) One (1) copy to the Contractor; and
(g) For all non-Canadian contractors, one (1) copy to:

DQA/Contract Administration
National Defence Headquarters
MGen George R. Pearkes Building
101 Colonel By Drive
Ottawa, ON K1A OK2
E-mail: ContractAdmin.DQA@forces.gc.ca

6.8 Certifications

6.8.1 Compliance

The continuous compliance with the certifications provided by the Contractor in its bid and the ongoing cooperation in providing additional information are conditions of the Contract. Certifications are subject to verification by Canada during the entire period of the Contract. If the Contractor does not comply with any certification, fails to provide the additional information, or if it is determined that any certification made by the Contractor in its bid is untrue, whether made knowingly or unknowingly, Canada has the right, pursuant to the default provision of the Contract, to terminate the Contract for default.

6.8.2 Federal Contractors Program for Employment Equity - Default by the Contractor

The Contractor understands and agrees that, when an Agreement to Implement Employment Equity (AIEE) exists between the Contractor and Employment and Social Development Canada (ESDC)-Labour, the AIEE must remain valid during the entire period of the Contract. If the AIEE becomes invalid, the name of the Contractor will be added to the "FCP Limited Eligibility to Bid" list. The imposition of such a sanction by ESDC will constitute the Contractor in default as per the terms of the Contract.

6.8.3 SACC Manual Clauses
A3060C 2008/05/12 Canadian Content Certification

6.9 Applicable Laws
The Contract must be interpreted and governed, and the relations between the parties determined, by the laws in force in Ontario.

6.10 Priority of Documents
If there is a discrepancy between the wordings of any documents that appear on the list, the wording of the document that first appears on the list has priority over the wording of any document that subsequently appears on the list.

a) the Articles of Agreement;

b) the general conditions 2030 (**2015/09/03**), General Conditions - Goods (Higher Complexity);
c) Annex A, Requirement;
d) Annex "B" –DSSPM 2-6-001-7150 –Manufacturing Data for converged jackets
e) Annex "C "– DSSPM 2-6-001-7213–Manufacturing Data for converged trousers
f) Annex "D "– DSSPM 2-2-80-209 SPECIFICATION FOR CLOTH, NYLON, AND TRILAMINATE
g) Annex "E "– DSSPM 2-2-80-210 SPECIFICATION FOR CLOTH, NYLON, POLYURETHANE
h) Annex "F "– DSSPM 2-2-80-052 SPECIFICATION FOR CLOTH, TAFFETA, NYLON,
i) Annex G "– DSSPM 2-2-80-500 SPECIFICATION FOR CADPAT TM TW
j) Annex H "– DSSPM 2-2-80-501 SPECIFICATION FOR CADPAT TM AR
k) the Contractor's bid dated _____

6.11 Defence Contract
SACC Manual clause A9006C (2012/07/16) Defence Contract

6.12 SACC Manual Clauses
C2611C 2007/11/30 Customs Duties - Contractor Importer
C2801C 2014/11/27 Priority Rating - Canadian-based Contractors

6.13 Materials: Contractor Total Supply
The Contractor will be responsible for obtaining all materials required in the manufacture of the item(s) Specified. The delivery stated for the item(s) allows the necessary time to obtain such materials.

6.14 Procedures for Design Change/Deviations
The Contractor must follow these procedures for any proposed design change/deviation to contract specifications.

The Contractor must complete **Part 1 to 12B the Design Change/Deviation form DND 675** and forward one (1) copy the "Technical" Authority and one (1) copy to the Contracting Authority.

The Contractor will be authorized to proceed upon receipt of the design change/deviation form signed by the Contracting Authority. A contract amendment will be issued to incorporate the design change/deviation in the Contract.

6.15 Plant Closing
The Contractor's plant closing for Christmas and Summer holidays are as follows. During this time there will be no shipments.

2016-2017
Summer Holiday FROM _____ TO _____
Christmas Holiday FROM _____ TO _____

2017-2018
Summer Holiday FROM _____ TO _____
Christmas Holiday FROM _____ TO _____

2018-2019
Summer Holiday FROM _____ TO _____
Christmas Holiday FROM _____ TO _____

6.16 Plant Location
Items will be manufactured at: _____

6.17 Subcontractor(s)
The following subcontractor(s) will be utilized in the performance of the contract.

Name of Company: _____
Location: _____
Value of subcontract: $_____
Nature of subcontracting work performed: _____

Subcontractors, other than those listed above, may not be utilized without the written permission of Canada.

6.18 Origin of Work - Disclosure of Information

1. For each line item, the Contractor must specify the name(s) of all countries where the apparel goods are cut (or knit to shape) or sewn, regardless of whether the work is to be performed by the Contractor or one of its subcontractor(s).

2. The Contractor agrees that Canada may publicly disclose the information provided with respect the countries of origin.

3. The Contractor must immediately inform Canada in writing of any and all changes affecting the information provided under this clause during the entire contract period.

6.19 Overshipment

Overshipment will not be accepted unless prior approval is obtained from the Contracting Authority.

6.20 Ownership of Product - CADPAT

All products and materials provided to perform the work and any modifications made by the Contractor are the property of Canada.

Patterns and technical data are patented and copyrighted to Her Majesty the Queen of Canada.

The printed textile and any garments made are for the sole end use of the Department of National Defence. The contractor acknowledges that it must not manufacture, sell or offer for sale goods incorporating the CADPAT pattern and colours to any person or entity other than Canada without the Minister's prior written authorization.

It is an explicit condition of this agreement that any second quality garments or goods produced pursuant to the contract will not be released, sold or offered to be sold, directly or indirectly to any person or corporation other than Canada without the Minister's prior written authorization.

6.21 Quality Plan

No later than 30 days after the effective date of the Contract, the Contractor must submit for acceptance by the Department of National Defence (DND) a Quality Plan prepared according to the latest issue (at contract date) of ISO 10005:2005 "Quality management systems - Guidelines for quality plans". The Quality Plan must describe how the Contractor will conform to the specified quality requirements of the Contract and specify how the required quality activities are to be carried out, including quality assurance of subcontractors. The Contractor must include a traceability matrix from the elements of the specified quality requirements to the corresponding paragraphs in the Quality Plan.

The documents referenced in the Quality Plan must be made available when requested by Public Works and Government Services Canada or DND.

If the Quality Plan was submitted as part of the bidding process, the Contractor must review and, where appropriate, revise the submitted plan to reflect any changes in requirements or planning which may have occurred as a result of pre-contract negotiations.

Upon acceptance of the Quality Plan by DND, the Contractor must implement the Quality Plan. The Contractor must make appropriate amendments to the Quality Plan throughout the term of the contract to reflect current and planned quality activities. Amendments to the Quality Plan must be acceptable to DND.

6.22 Post Contract Award Meeting

The Design Authority or his delegated representatives at National Defence Headquarters and the applicable DND Quality Assurance Representative (DNDQAR) must be afforded access to the Contractor's plant and all other premises where pertinent processes are being performed, on the same basis as afforded the representative of National Defence Headquarters, DGQA.

A post contract award meeting may be convened within twenty (20) calendar days after award of contract. Participants may include representatives of the Contractor, DND Design Authority, DNDQAR, DND project Authority, Contracting Authority and the DND Administrative Authority. Other meetings may be convened as required.

The Contractor is responsible for the recording and distribution of the minutes for all contract related meeting. The minutes must be sent to the Contracting Authority for acceptance prior to the distribution to all participants or as otherwise directed in the contract within ten (10) calendar days of the subject meeting. The minutes must be used only as a record of proceedings.

6.23 Progress report

1. The Contractor must submit a report on the last working day of each month, in electronic format, on the progress of the Work, to the Procurement Authority, the DND QAR and the Contracting Authority.

2. The progress report must contain as a minimum the following:

   i. A summary of the Work accomplished during the period of the report. Material purchased and stages of production;

   ii. A summary of the Work planned for the ensuing period;

   iii. A statement as to whether the work is proceeding according to plan, full explanation for deviations from the work plan;

   iv. Identification of current and potential problems which may affect the progress of the work, and the proposed solutions to those problems; and.

   v. Delivery status of items by size and destination.

The Contractor must not commence production of the pre-production sample(s), or of the item, under the contract until the Contractor has received a written notification from the Technical Authority that the lead

6.24 Pre-Production Samples

1. The Contractor must provide pre-production samples of one (1) jacket, hot/wet weather, windbreaker, static-dissipative, CADPAT TW in size 7040 and one (1) trousers, windbreaker, static-dissipative, CADPAT TW in size 7034, accompanied by the sealed samples if applicable, to the Technical Authority for acceptance within 60 calendar days from date of contract award.

2. If the pre-production samples are rejected, the Contractor must submit second pre-production samples within 30 calendar days of notification of rejection from the Technical Authority.

3. If the pre-production samples are accepted by either full acceptance or conditional acceptance, the Contractor must proceed with production as per the Contract requirements.

4. Rejection by the Technical Authority of the second pre-production samples submitted by the Contractor for failing to meet the contract requirements will be grounds for termination of the Contract for default.

5. The Contractor must carry out all required inspection and tests to verify conformance to the technical requirements of the Contract.

6. In addition to providing the pre-production samples, the Contractor must provide a copy of the laboratory test reports ***and*** Certificates of compliance, as per Annexes M and J, to the Contracting Authority and Technical Authority, transportation charges prepaid, and without charge to Canada.

7. The pre-production samples submitted by the Contractor will remain the property of Canada.

8. The Technical Authority will notify the Contractor, in writing, of the full acceptance, conditional acceptance, or rejection of the pre-production samples. A copy of this notification will also be provided by the Technical Authority to the Contracting Authority. The notice of the full acceptance or conditional acceptance does not relieve the Contractor from complying with all requirements and conditions of the Contract.

9. The Contractor must not commence or continue with production of the items and must not make any deliveries until the Contractor has received a written notification from the Technical Authority that the pre-production samples are fully acceptable or conditionally acceptable. Any production of items before pre-production sample acceptance will be at the sole risk of the Contractor.

10. The pre-production samples may not be required if the Contractor is currently in production. The request for waiver of pre-production samples must be made by the Contractor in writing to the Contracting Authority. The waiving of this requirement will be at the sole discretion of the Technical Authority and will be evidenced through a contract amendment.

Production Samples

1. In addition to the pre-production samples, and if requested by the Technical Authority, the Contractor must take production samples of the jacket and trousers from the first production run and provide them to the Technical Authority, accompanied by the sealed samples, if applicable, for acceptance within 15 calendar days from the start of the production.

2. Rejection by the Technical Authority of the production samples submitted by the Contractor for failing to meet the contract requirements will be grounds for termination of the Contract for default.

3. If the production samples are accepted by either full acceptance or conditional acceptance, the Contractor must proceed with production as per the Contract requirements.

4. The Contractor must carry out all required inspection and tests to verify conformance to the technical requirements of the Contract.

5. In addition to providing the production samples the Contractor must provide a copy of the laboratory test reports ***and*** Certificates of compliance, as applicable, to the Contracting Authority and Technical Authority, transportation charges prepaid, and without charge to Canada.

6. The production samples submitted by the Contractor will remain the property of Canada.

7. The Technical Authority will notify the Contractor, in writing, of the full acceptance, conditional acceptance, or rejection of the production sample(s). A copy of this notification will also be provided by the Technical Authority to the Contracting Authority. The notice of the full acceptance or conditional acceptance does not relieve the Contractor from complying with all requirements and conditions of the Contract.

8. The Contractor must not continue with production of the items and must not make any deliveries until the Contractor has received a written notification from the Technical Authority that the production samples are fully acceptable or conditionally acceptable. Any production of items before production sample acceptance will be at the sole risk of the Contractor.

9. The production samples may not be required if the Contractor is currently in production. The request for waiver of production samples must be made by the Contractor in writing to the Contracting Authority. The waiving of this requirement will be at the sole discretion of the Technical Authority and will be evidenced through a contract amendment.

CERTIFICATE OF COMPLIANCE-DEFINITION
A Certificate of Compliance (C of C) is a written statement from the supplier guaranteeing the compliance of the proposed product to the specification, or portion thereof, referenced. This document must be on official company stationary; it must be current; it must make reference to the applicable specification and have the original signature of the company's designated representative. The Crown reserves the right to verify the statements made in the C of C. Full test results, demonstrating the product's compliance, will be accepted in lieu of a Certificate of Compliance.

Laboratory Analysis - Definition
Laboratory analysis of the product offered showing test results for specific tests listed hereunder of physical properties detailed in the technical requirement must be provided with the pre-production ***OR*** production samples. Testing must be performed by an independent accredited laboratory establishment and must be in accordance with the test methods detailed in the technical requirement. The laboratory report and test results must be dated within six months of the request for proposal posting date.

6.24.1 Sealed Samples - Guidance Only
The sealed samples are representative of the required item but are not part of the technical requirement. The sealed samples may not meet the technical requirement in all respects and must be used for guidance only during production.

6.24.2 Sealed Samples - Return to Sender
The sealed samples which may have been sent to the Contractor, are to be returned to the sender upon completion of Contract.

The sealed samples are not to be mutilated or cut, and must be returned in the same condition as sent to the Contractor.

6.25 Specifications and Standards

6.25.1 United States Military Specifications and Standards
The Contractor is responsible for obtaining copies of all United States (US) military specifications and standards which may be applicable to the requirement. These specifications and standards are available commercially, or may be obtained by visiting the US Department of Defense Website, at the following address: **http://assistdocs.com/search/search_basic.cfm**

6.25.2 Canadian General Standards Board (CGSB) - Standards
A copy of the CGSB Standards referred to in the Contract is available and may be purchased from:

Canadian General Standards Board
Place du Portage III, 6B1
11 Laurier Street
Gatineau, Québec
Telephone: (819) 956-0425 or 1-800-665-CGSB (Canada only)
Fax: (819) 956-5740
E-mail: ncr.cgsb-ongc@pwgsc-tpsgc.gc.ca
CGSB Website: http://www.tpsgc-pwgsc.gc.ca/ongc-cgsb/index-eng.html

6.26 Financial Security

1. Canada may convert the security deposit to the use of Canada if any circumstance exists which would entitle Canada to terminate the Contract for default, but any such conversion will not constitute termination of the Contract.

2. Where Canada so converts the security deposit:

(a) the proceeds will be used by Canada to complete the Work according to the conditions of the Contract, to the nearest extent that it is feasible to do so and any balance left will be returned to the Contractor on completion of the warranty period; and

(b) if Canada enters into a Contract to have the Work completed, the Contractor will:
(i) be considered to have irrevocably abandoned the Work; and
(ii) remain liable for the excess cost of completing the Work if the amount of the security deposit is not sufficient for such purpose. "Excess cost" means any amount over and above the amount of the Contract Price remaining unpaid together with the amount of the security deposit.

3. If Canada does not convert the security deposit to the use of Canada before completion of the contract period, Canada will return the security deposit to the Contractor within a reasonable time after such date.

4. If Canada converts the security deposit for reasons other than bankruptcy, the financial security must be reestablished to the level of the amount stated above so that this amount is continued and available until completion of the contract period.

ANNEX «A»
REQUIREMENT

1. TECHNICAL REQUIREMENT

The Contractor is required to provide Canada for the Department of National Defence *(DND)* with jackets hot/wet weather, windbreaker, static dissipative, CADPAT TW and trousers, hot/wet weather, windbreaker, static dissipative, CADPAT TW ,in accordance with DSSPM 2-6-001-7150, DSSPM 2-6-001-7213,DSSPM 2-2-80-209,DSSPM 2-2-80-210, DSSPM 2-2-80-052,DSSPM 2-2-80-500, DSSPM 2-2-80-501, patterns, drawings, sealed samples.

2. ADDRESSES

Destination Address	Invoicing Address
WB941 Department of National Defence 25 CFSD Montreal 6363 Notre Dame St. E. Montreal, Quebec H1N 1V9	**W1941** Department of National Defence CFSD Montreal P.O. Box 4000 Stn K Montreal, Quebec H1N 3R9 Attention: Accounts payable

3. DELIVERABLES

CONTRACT QUANTITY

Firm Quantity

Item	Description	Firm Quantity	Unit of Issue	Firm Unit Price, DDP, Transportation costs included, Applicable taxes extra
1	**jackets**	**13,400**	Each	**$ _____**

Item	Description	Firm Quantity	Unit of Issue	Firm Unit Price, DDP, Transportation costs included, Applicable taxes extra
2	**trousers**	**9,800**	Pairs	**$ _____**

SIZE ROLL
See Annex L

The Crown reserves the right to amend the size roll for items 1 and 2. The Contractor will advise DND before production has reached the 75% threshold. PWGSC will then advise the contractor if the size roll needs to be amended at no cost to the crown. DND will supply an updated size roll to PWGSC for contract amendment to be forwarded to the contractor.

A production priority list (based on sizes) may be sent to the contractor after acceptance of the PPS for production purpose.

"As and When Requested" Quantity - Special sizes

Item	Description	Estimated Quantity	Unit of Issue	Firm Unit Price, DDP, Transportation costs included, Applicable taxes extra
3	Jackets	**50**	Each	**Year 1 $ _____** **Year 2 $ _____**

Item	Description	Estimated Quantity	Unit of Issue	Firm Unit Price, DDP, Transportation costs included, Applicable taxes extra
4	Trousers	**50**	Pairs	**Year 1 $ _____** **Year 2 $ _____**

Year 1 –prices valid for 12 months from contract award
Year 2 – prices valid for 13 months to 24 months from contract award
Year 3 – prices valid for 25 months to 36 months from contract award

OPTIONS

Item	Description	Estimated Quantity	Unit of Issue	Firm Unit Price, DDP, Transportation costs included, Applicable taxes extra
5	Jackets	**13,400**	Each	**$ _____ year 1** **$ _____ year 2**

Item	Description	Estimated Quantity	Unit of Issue	Firm Unit Price, DDP, Transportation costs included, Applicable taxes extra
6	Trousers	**9,800**	Pair	**$ _____ year 1** **$ _____ year 2**

Year 1 –prices valid for 24 months from contract award
Year 2 – prices valid for 25 months to 36 months from contract award

4. "AS AND WHEN REQUESTED" QUANTITIES - Identified as Items 3 and 4

Under this Contract, the Contractor is required to provide certain goods to Canada on an "as and when requested" basis. Except as expressly provided in this Contract, Canada is not obliged to request any such goods under this Contract and this Contract does not represent a commitment to purchase such goods exclusively from the Contractor.

DND may issue orders for "as and when requested" quantities directly to the Contractor detailing the exact quantities of goods being ordered and the delivery date during the effective period and in accordance with the predetermined conditions.

The quantity of "as and when requested" goods specified under items 3-4 is only an approximation of requirements.

Order for "as and when requested" quantities will be made on Form 942.

The period for placing “as and when requested” orders will be 36 months from contract award date.

The delivery of the "as and when requested" quantities must be made within 30 calendar days after receipt of the order document.

Deliveries made against orders of the “as and when requested” quantities will be inspected by the Consignee at destination.

Financial Limitation
The total cost to Canada resulting from orders of “as and when requested” quantities must not exceed the sum of $ (to be established at contract), applicable taxes extra, unless otherwise authorized in writing by the Contracting Authority. The Contractor must not be obligated to perform any work or services or supply any articles in response to orders which would cause the total cost to Canada to exceed the said sum, unless an increase is so authorized.

5. OPTION QUANTITIES - Identified as Items 5 and 6
The Contractor grants to Canada the irrevocable option to acquire the goods described under items #5 and 6 and under the same terms and conditions and at the prices stated in the Contract. The option may only be exercised by the Contracting Authority for a minimum of 50%c of the firm quantity of each item up to a maximum of 100% of the firm quantity for each item, per amendment distributed amongst the items and will be evidenced through a contract amendment.

The Contracting Authority may exercise the option within 36 months after contract award date by sending a written notice to the Contractor.

Multiple amendments may result.

A size roll will be provided if and when the option is exercised.

ANNEX "N" to PART 5 - BID SOLICITATION

FEDERAL CONTRACTORS PROGRAM FOR EMPLOYMENT EQUITY - CERTIFICATION

I, the Bidder, by submitting the present information to the Contracting Authority, certify that the information provided is true as of the date indicated below. The certifications provided to Canada are subject to verification at all times. I understand that Canada will declare a bid non-responsive, or will declare a contractor in default, if a certification is found to be untrue, whether during the bid evaluation period or during the contract period. Canada will have the right to ask for additional information to verify the Bidder's certifications. Failure to comply with any request or requirement imposed by Canada may render the bid non-responsive or constitute a default under the Contract.

For further information on the Federal Contractors Program for Employment Equity visit Employment and Social Development Canada (ESDC)-Labour's website.

Date :_____(YYYY/MM/DD) (If left blank, the date will be deemed to be the bid solicitation closing date.)

Complete both A and B.

A. Check only one of the following:

( ) A1. The Bidder certifies having no work force in Canada.

( ) A2. The Bidder certifies being a public sector employer.

( ) A3. The Bidder certifies being a federally regulated employer being subject to the *Employment Equity Act.*

( ) A4. The Bidder certifies having a combined work force in Canada of less than 100 employees (combined work force includes: permanent full-time, permanent part-time and temporary employees [temporary employees only includes those who have worked 12 weeks or more during a calendar year and who are not full-time students]).

A5. The Bidder has a combined workforce in Canada of 100 or more employees; and

( ) A5.1. The Bidder certifies already having a valid and current Agreement to Implement Employment Equity (AIEE) in place with ESDC-Labour.

OR

( ) A5.2. The Bidder certifies having submitted the Agreement to Implement Employment Equity (LAB1168) to ESDC-Labour. As this is a condition to contract award, proceed to completing the form Agreement to Implement Employment Equity (LAB1168), duly signing it, and transmit it to ESDC-Labour.

B. Check only one of the following:

( ) B1. The Bidder is not a Joint Venture.

OR

( ) B2. The Bidder is a Joint Venture and each member of the Joint Venture must provide the Contracting Authority with a completed annex Federal Contractors Program for Employment Equity - Certification. (Refer to the Joint Venture section of the Standard Instructions)

NOTICE

This documentation has been reviewed by the technical authority and does not contain controlled goods. Disclosure notices and handling instructions originally received with the document shall continue to apply.

AVIS

Cette documentation a été révisée par l'autorité technique et ne contient pas de marchandises contrôlées. Les avis de divulgation et les instructions de manutention reçues originalement doivent continuer de s'appliquer.

MANUFACTURING DATA FOR CONVERGED JACKET, HOT/WET WEATHER, WINDBREAKER, STATIC-DISSIPATIVE, CADPAT™

1. SCOPE

1.1 Scope. This Manufacturing Data covers the materials, design, construction and inspection requirements for Jacket, Hot/Wet Weather/ Windbreaker, Static-Dissipative, CADPAT™ used by Land Force and Air Force.

1.2 Intended use. This jacket is usually worn with the Trousers, Converged, Hot/Wet Weather / Windbreaker, Static-Dissipative, CADPAT™ (in accordance with DSSPM 2-6-001-7213).

1.3 Classification. Jackets covered by this Manufacturing Data shall be the following types:

Type I	Converged Jacket, Hot/Wet Weather, Windbreaker, Static-Dissipative, CADPAT™ Temperate Woodland (TW) **NSN 8415-20-001-7150 A/A**
Type II	Converged Jacket, Hot/Wet Weather, Windbreaker, Static-Dissipative, CADPAT™ Arid (AR) **NSN 8415-20-000-5858 A/A**

1.4 CADPAT™. The information contained herein is Copyright to Her Majesty the Queen of Canada, as is its associated pattern. The term CADPAT™, with and without extensions, is a registered Trademark belonging to the Department of National Defence (DND). Any of the data contained in this specification, and its associated pattern, may be used only for goods for Canada. The printed textile and any items made therefrom must be for the sole end use of DND. There must be no selling or offering for sale of goods incorporating the CADPAT™ pattern and colours to any person or entity other than Canada without the Minister's prior written authorization. Explicit in this is that any goods of not first quality produced must not be released, sold, or offered for sale, directly or indirectly, to any person or corporation other than Canada without the Minister's prior written authorization.

1.4.1 The information, data, know-how, formulas, algorithms, software, processes, systems, methods, designs, text, works, figures, tables, sketches, photographs, plans, drawings, specifications, samples, reports, names, inventions and/or ideas contained herein (hereinafter "Intellectual Property") is the exclusive property of Her Majesty The Queen in Right of Canada as represented by the Minister of National Defence (hereinafter referred as "DND"). No one has the right to reproduce, disclose, disseminate, or utilize, in any manner or in any form, this Intellectual Property, or any part thereof, without the prior written consent of DND. For further information on the restrictions applicable to this Intellectual Property, or to request consent from DND, please contact the Contracting Authority.

2. APPLICABLE DOCUMENTS

2.1 Government documents. The following documents form part of this Manufacturing Data to the extent specified herein. Unless otherwise specified, the issue or amendment of documents effective for a particular contract must be that in effect on the date of the applicable invitation to tender or the contract.

SPECIFICATIONS AND STANDARDS

D-80-001-055/SF-001	Label, Clothing and Equipment
D-83-001-005/SF-001	Fastener, Slide, Interlocking
CFTPO General	Canadian Forces Transportation Packaging Order

DRAWINGS

CS-149	Socket, Fastener
CS-150	Studs, Fastener
CS-151	Eyelet, Fastener
CS-153	Button, Fastener

2.2 Other publications. The following documents form part of this Manufacturing Data to the extent specified herein. Effective data must be that in effect on the date of manufacture.

American Society for Testing and Materials (ASTM)
ASTM International
P.O. Box C700
West Conshohocken, PA
19428-2959, USA
Telephone: (610) 832-9585
Email: service@astm.org

E809	Standard Practise for Measuring Photometric Characteristics of Retroreflectors

E810	Standard Test Method for Coefficient of Retroreflection of Retroreflective Sheeting Utilizing the Coplanar Geometry

General Services Administration (FED-STD)
Federal Supply Service
FSS Product Acquisition Center
Supply Standards Division (FLAS)
Arlington, VA
22202 USA
Telephone: 703-605-2567
Email: jennifer.moffat@gsa.gov
Download Documents: http://assist.daps.dla.mil/quicksearch/

A-A-55126B	Commercial Item Description - Fastener Tapes, Hook and Loop, Synthetic

Canadian General Standards Board (CGSB) Sales Unit
11 Laurier Street
Place du Portage, Phase III
Gatineau, Quebec K1A 1G6
Tel: (819) 956-0425
Alternate Tel: (800) 665-2472
Email: ncr.cgsb-ongc@pwgsc.gc.ca

CAN/CGSB-4.2-M	Textile Text Methods
CAN/CGSB-4.131-M	Cotton-Covered or Polyester-Covered, Polyester Thread
CAN/CGSB-54.1-M	Stitches and Seams, Part I and II
CAN/CGSB-86.1-2003	Care Labelling of Textiles

Commission Internationale de l'Eclairage (CIE)
The CIE Central Bureau
Kegelgasse 27, A-1030 Vienna/AUSTRIA
Tel.: +43 1 - 714 31 87 0
Fax: +43 1 - 714 31 87 18
E-mail: ciecb@ping.at

CIE 54.2	Retroreflection: Definition and Measurement

European Committee For Standardization
CEN Sales Point
ON - Austrian Standards Institute
Heinestraße 38
A-1021 Vienna
Fax: + 43 1 213 00 818
E-mail: www.on-norm.at

EN 471	Specification for High-Visibility Warning Clothing
EN 530	Abrasion Resistance of Protective Clothing Material - Test Methods

National Fire Protection Agency (NFPA)
1 Batterymarch Park
Quincy, Massachusetts
USA 02169-7471
Tel: (617) 770-3000

NFPA 1971 (2000 edition)	Standard on Protective Ensemble for Structural Fire Fighting

Standards Council of Canada (ISO)
270 Albert Street, Suite 200
Ottawa, ON
K1P 6N7
Telephone: (613) 238-3222
Email: info@scc.ca

ISO 6330	Textiles - Domestic Washing and Drying Procedures for Textile Testing (Method 2A)
ISO 7854	Rubber or Plastics-Coated Fabrics - Determination of Resistance to Damage by Flexing

2.3 DSSPM documents. The following documents form part of the Technical Data Package for this item.

DSSPM 2-2-80-209 – **Annex D**	Specification for Static-Dissipative, Waterproof, Moisture Vapour Permeable (WMVP) Trilaminate Fabric
DSSPM 2-2-80-210 – **Annex E**	Specification for Cloth, Nylon, Polyurethane Coated, 235 g/m²
DSSPM 2-2-80-052 – **Annex F**	Manufacturing Data for Cloth, Taffeta, Nylon, 88g/m², Type I and II
DSSPM 2-2-80-500 – **Annex G**	Specification for CADPAT™ TW [Canadian Disruptive Pattern (Temperate Woodland)]
DSSPM 2-2-80-501 – **Annex H**	Specification for CADPAT™ (AR) [Canadian Disruptive Pattern (Arid)]

Figures. The following Figures form part of this Manufacturing Data. Figures are not to scale.

Figure 1	Front View – Type I and II
Figure 2	Back View – Type I and II
Figure 3	Detachable Hood and Reflector Tape Assembly Details
Figure 4	Right Side of Jacket – Inside View – Side Suppression System
Figure 5	Finished Dimensions of Garment Components
Figure 6	Finished Dimensions of Lower Semi-Cargo and Sleeve Pockets
Figure 7	Underarm Ventilation System
Figure 8	Hidden Front Chest Pockets and Sleeve Lining Details
Figure 9	Marking and Care Label

2.4 Sealed patterns.

DSSPM 107-04	Converged Jacket, Hot/Wet Weather / Windbreaker, Static Dissipative
DSSPM 270-01	Cloth, Nylon, Trilaminate, 185 g/m^2, Static-Dissipative, Waterproof, Moisture Vapour Permeable, Type I, CADPAT™ (TW). Sealed for construction, finish, hand and CADPAT™ (TW) pattern, colours, colour distribution, motif size, clarity, acceptable print quality
DSSPM 264-07	Cloth, Nylon, Trilaminate, 185 g/m^2, Static-Dissipative, Waterproof, Moisture Vapour Permeable, Type II, CADPAT™ (AR). Sealed for construction, finish, hand and CADPAT™ (AR) pattern, colours, colour distribution, motif size, clarity, acceptable print quality
DSSPM 259-04	Cloth, Nylon, Polyurethane Coated, 235 g/m^2 for construction and hand
DCGEM 290-73	Cloth, Taffeta, Nylon, 88 g/m2, Type II for Finish Only
DSSPM 281-01	Cloth, Twist, Cotton/Nylon, 170 g/m^2 , Canadian Average Green (For Colour and IRR properties)
DSSPM 259-01	Cloth, Twist, Nylon/Cotton, Lightweight, CADPAT™ (TW) (Disruptive Pattern Temperate) for pattern, motif size, colour distribution, clarity and colour guidance

DSSPM 253-02	Cloth, Twist, Nylon/Cotton, Lightweight, CADPAT™ (AR), (Disruptive Pattern Arid Regions) for colours, motif size, colour distribution, print quality, penetration, clarity and pattern

2.5 Pattern drawings. DND will provide the paper patterns for all sizes under Style Code JHWWAS06. Size 7040 (REG/MED) will be used for tendering purposes.

2.6 Order of precedence.

2.6.1 In the event of inconsistency between contract documents, such as contract, technical data, and sealed patterns, the order of precedence must be contract, technical data, and sealed patterns.

2.6.2 In the event of a conflict between the text of this manufacturing data and the references cited herein, the text of this manufacturing data must take precedence.

2.6.3 In the event of inconsistency within this manufacturing data, the Contracting Authority must be contacted for clarification.

2.6.4 Nothing in this document supersedes applicable laws and regulations, unless a specific exemption has been obtained.

3. REQUIREMENTS

3.1 Sealed patterns. A sealed pattern, when available, will be supplied to the successful tendered. The sealed pattern shall constitute the standard in regard to any properties not specified in the Manufacturing Data.

3.2 Design. The design must be in accordance with Sealed Pattern DSSPM 107-04 and must incorporate the following features:

a. front and back venting yokes, with retrievable reflector tape;
b. front closure with slide fastener and fly system;
c. collar stand;
d. detachable hood;
e. two front hidden pockets for hood and pencil/pen storage;
f. rank tab on outside front fly;
g. drawcord in waist and hem;
h. side suppression systems with slide fasteners;
i. cargo pockets with ear defender retainer tabs;
j. angled shoulder pockets with buttonhole pass-throughs in sleeves for communication device cords;
k. underarm vent with slide fastener closure; and
l. raglan sleeves with hook and loop adjustable closure.

3.2.1 Unless otherwise specified, this garment must be governed by the Scale of Measurements (see Table I).

3.3 Preproduction. Preproduction samples must be completely representative of the final production garment, being made from parts and materials as specified and by equipment and processes, which will be used in quantity production.

3.4 Materials

3.4.1 Shell. The material must be static-dissipative, waterproof moisture vapour permeable (WMVP) trilaminate fabric in accordance with DSSPM 2-2-80-209. The colour must be CADPAT™ Temperate Woodland in accordance with Specification DSSPM 2-2-80-500 and Sealed Pattern DSSPM 270-01 for Type I Jackets. For Type II Jackets, the colour must be CADPAT™ Arid Regions in accordance with Specification DSSPM 2-2-80-501 and Sealed Pattern DSSPM 264-07. For Type III Jackets, the colour of the face side of the fabric must be International Orange in accordance with Sealed Pattern DCGEM 263-78.

3.4.2 Elbow reinforcement patch. The material must be cloth, nylon, polyurethane coated, 235 g/m^2, textured high tenacity nylon in accordance with DSSPM 2-2-80-210 and Sealed Pattern DSSPM 259-04. The colour must be CADPAT™ Temperate Woodland (Type I of DSSPM 2-2-80-210) in accordance with DSSPM 2-2-80-500 and Sealed Pattern DSSPM 259-01 for Type I Jackets. For Type II Jackets, the colour must be CADPAT™ Arid (Type II of DSSPM 2-2-80-210) in accordance with DSSPM 2-2-80-501 and Sealed Pattern DSSPM 253-02.

3.4.3 Lining for upper portion of the sleeve and material for the pencil pocket. The material must be cloth, taffeta, nylon, 88 g/m² to conforming to Type II (heat set only) of DSSPM 2-2-80-052 and Sealed Pattern DCGEM 290-73. The colour must be Canadian Average Green in accordance with Sealed Pattern DSSPM 281-01 for Type I Jackets. For Type II Jackets, the colour must be Light Sand as shown on Sealed Pattern DSSPM 253-02.

3.4.4 Lining for the lower portion of the sleeve and upper body and pocket bags for the hidden front chest pockets. The material must be commercially available mesh liner in accordance with Table II. The colour must be Canadian Average Green in accordance with Sealed Pattern DSSPM 281-01 for Type I Jackets. For Type II Jackets, the colour must be Light Sand as shown on Sealed Pattern DSSPM 253-02.

Table II – Technical Requirements for the Mesh Fabric

Description	100% polyester or 100% nylon tricot knit	
Gauge	28	
Wales	35 per inch	Tolerance: ± 2 per inch
Courses	41 per inch	Tolerance: ± 2 per inch
Weight	115 g/m²	Tolerance: ± 5%
Shrinkage (length and width)		Tolerance: 3% max

3.4.5 Sealing tape. The sealing tape must be commercially available tape compatible with the anti-static, waterproof moisture vapour permeable (WMVP) shell material (see para 3.4.1). The tape must be in accordance with DSSPM 2-2-80-209. The colour must be Canadian Average Green in accordance with Sealed Pattern DSSPM 281-01 for Type I Jackets. For Type II Jackets, the colour must be Light Sand as shown on Sealed Pattern DSSPM 253-02.

3.4.6 Hook and loop fastener tape. The tape must be 100% nylon, hook and loop fastener tape shall conform to Type II, Class 1 in accordance with A-A-55126B. This manufacturing data specifies the use of the following types of hook and loop fastener tapes:

- plain backed, 18 mm (3/4 inch) in width
- plain backed, 25 mm (1 inch) in width
- plain backed, 38 mm (1-1/2 inch) in width
- plain backed, 50 mm (2 inches) in width

When used in Type I Jackets, the colour must be Canadian Average Green in accordance with Sealed Pattern DSSPM 281-01 for. When used in Type II Jackets, the colour must be Light Sand as shown on Sealed Pattern DSSPM 253-02.

3.4.7 Slide fasteners for the front closure and side suppression systems. The slide fasteners used for the front closure and side suppression systems must have plastic interlocking members, automatic lock sliders and 100% polyester tape in accordance with D-83-001-005/SF-001. The slide fastener used for the underarm must have monofilament (coil) members, automatic lock sliders and 100% polyester tape coated with a polyurethane (PU) coating not less than 2.5 mils thick in accordance with D-83-001-005/SF-001.

3.4.7.1 When tested in accordance with the applicable test methods, the slide fasteners must meet the requirements for colourfastness and strength. The colour must be Canadian Average Green in accordance with Sealed Pattern DSSPM 281-01 for Type I Jackets. For Type II Jackets, the colour must be Light Sand as shown on Sealed Pattern DSSPM 253-02. The requirements for the slide fasteners are detailed in Table III:

Table III – Requirements for Slide Fasteners

Application	Class	Type	Chain Type	Pull Type	Length
Front closure	3	9	Moulded	Regular pull	see Scale of Measurements
Underarm ventilation on shell	2	11	Monofilament (Coil)	Regular pull	16-1/4 inches (41.3 cm)
Side suppression system	3	7	Moulded	Regular pull	see Scale of Measurements

3.4.7.2 Slide fastener for hood. The slide fastener used for the hood must be a monofilament (coil) slide fastener, Class 3, Type 9, with an automatic locking slider with a regular pull in accordance with D-83-001-005/SF-001. Due to long-term compatibility concerns with replacement hoods, the slide fastener used must be ***YKK Canada*** (3939 Thimens Blvd. St-Laurent, Quebec Tel: (514) 332-3350) ***Product Number CNFMO 56 5/8.*** The colour must be Canadian Average Green in accordance with Sealed Pattern DSSPM 281-01 for Type I Jackets. For Type II Jackets, the colour must be Light Sand as shown on Sealed Pattern DSSPM 253-02. The requirements for the slide fasteners are detailed in Table IV:

Table IV – Requirements for Slide Fastener for the Hood

Utilisation	Classe	Type	Type de chaîne	Type de tirette	Longueur
Hood	3	9	Monofilament (Coil) with stops at both ends	Regular pull	see Scale of Measurements

3.4.8 Reflector tape. The tape must be commercially available reflector tape, 1-inch (2.5 cm) wide, conforming to Table V.

Table V - Technical Requirements for Reflector Tape

Description	Silver reflective trim bonded with a special polymer layer to a flame resistant, durable 100% cotton-cloth backing
Width	1-inch (2.5 cm)
Colour	daytime: silver reflected: white
Retroreflectivity (initial): EN 471	Class 2 (Table 5)
Coefficient of retroreflection (R_A, in cd/lux/m^2) measured by methods traceable to either: ASTM E809 & E810 (R_A) or CIE 54.2: 1982 (R')	entrance angle -4.0°, observation angle 0.2°: min. 330 entrance angle +5.0°, observation angle 0.33°: min 250
Abrasion ($R_A \geq 100$): EN 530 Method 2	5000 cycles
Washing ($R_A \geq 100$): 50 cycles by ISO 6330 Method 2A (60°C)	Pass
Wet Reflectivity ($R_A \geq 100$): EN 471 Annex A	Pass
Flame resistance: Federal Test Method Standard 191A, Method 5903.1:	4" char length, 2 seconds afterflame
Heat Resistance: NFPA 1971, 2000 Sections 5-1.6 and 6-6	Pass
Convective Heat: NFPA 1971, 2000 Sections 6-1.5, 6-6 and 6-46	Pass

Note: 3M™ Scotchlite™ Reflective Material 8935 Silver Industrial Wash Flame Resistant Fabric has been found to meet the requirements.

3.4.9 Webbing tape

3.4.9.1 For ear defender tabs and shock cord holder. The tape must be commercially available webbing, 100% polypropylene, 3/4-inch (19.1 mm) wide. The colour for Type I Jackets must be Canadian Average Green in accordance with Sealed Pattern DSSPM 281-01 or black. For Type II Jackets, the colour must be Light Sand as shown on Sealed Pattern DSSPM 253-02.

3.4.9.2 For shoulder pocket tabs. The tape must be commercially available webbing, 100% polypropylene, 1-inch (25.4 mm) wide. The colour for Type I Jackets must be Canadian Average Green in accordance with Sealed Pattern DSSPM 281-01. For Type II Jackets, the colour must be Light Sand as shown on Sealed Pattern DSSPM 253-02.

3.4.10 Herringbone twill tape. The twill tape must be commercially available 100% polyester woven edge twill tape, herringbone weave, 1-inch (2.5 cm) wide, for use with the reflector tape and 1/2-inch (12.7 mm) for use attaching the drawcord locks. The colour must be Canadian Average Green in accordance with Sealed Pattern DSSPM 281-01 or black for Type I Jackets. For Type II Jackets, the colour must be Light Sand as shown on Sealed Pattern DSSPM 253-02.

3.4.11 Elastic cord. The drawcord for the waist, hem, and hood must be commercially available elastic cord in accordance with Table VI. The colour must be Canadian Average Green in accordance with Sealed Pattern DSSPM 281-01 or black for Type I Jackets. For Type II Jackets, the colour must be Light Sand as shown on Sealed Pattern DSSPM 253-02.

Table VI – Technical Requirements for the Elastic Cord

Description	Round elastic looping, polyester covered rubber	
Diameter	3.5 mm	Tolerance: ± 0.2 mm
Cover yarn	600D acetate or polyester	
Sheath	16 carriers	
Core	34's sq. cut rubber, 16 ends	
Picks per centimetre	28.37	
Stretch	190	Tolerance: ± 10%

3.4.12 Drawcord locks. The drawcord locks for the waist, hem, and hood must be commercially available, flat type, black acetyl with non-corrosive metal spring and an attachment slot. Dimensions must be in accordance with Table VII and comply with those on the Sealed Pattern. Eight (8) locks are required for each Jacket. The drawcord locks must match the shell material or be black.

Table VII – Dimensions for Drawcord Lock

Description	Requirement
Total height relaxed	1-3/8-inches (3.5 cm)
Total height compressed	1-inch (2.5 cm)
Body height	3/4-inch (19.1 mm)
Width bottom	5/8-inch (15.8 mm)
Thickness	3/8-inch (9.5 mm)
Attachment slot	9/16-inch x 1/16-inch (14.4 mm x 1.6 mm)

3.4.13 Snap fasteners. The snap fasteners must be black finish with a phosphor bronze spring, conforming to Drawings CS-149-1 (Sockets), CS-150-1 (Studs), CS-151-1 (Eyelets), and CS-153-2 (Buttons). Ten (10) sets of snap fasteners are required for each Jacket.

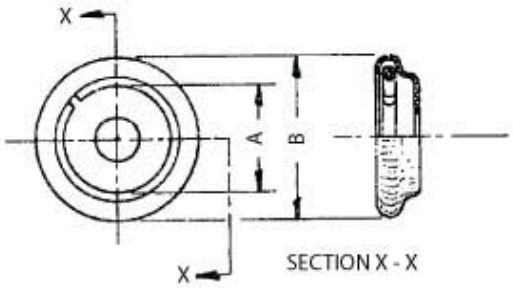

CS-149 – Socket Fastener

CS Part No	Inside diameter – Dim A	Outside diameter – Dim B
CS-149-1	11/32- inch (8.7 mm)	9/16- inch (14.3 mm)

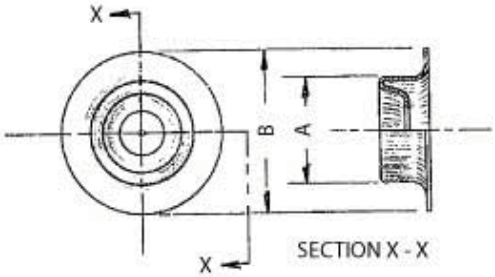

CS-150 – Stud Fastener

CS Part No	Diameter A	Flange diameter – Dim B
CS-150-1	3/8- inch (9.5 mm)	9/16- inch (14.3 mm)

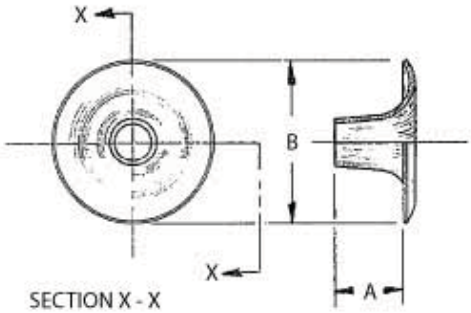

CS-151– Eyelet Fastener

CS Part No	Barrel Length Dim A	Flange Diameter Dim B
CS-151-1	¼- inch (6.3 mm)	9/16- inch (14.3 mm)

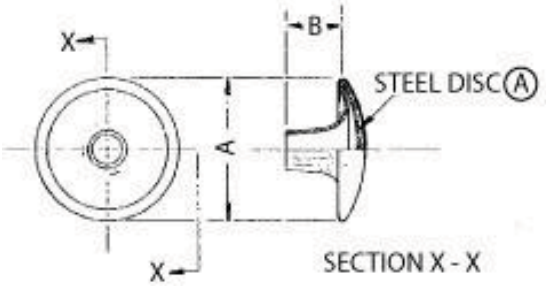

CS-153 – Button Fastener

CS Part No	Dim A		Dim B
	Ligne	Dia	Barrel Length
CS-153-2	24	39/64-inch (15.5 mm)	11/64- inch (4.4 mm)

3.4.14 Thread.

3.4.14.1 Thread for seaming, stitching, buttonholes and bartacks. The thread for seaming, stitching, buttonholes and bartacks must be cotton-covered or polyester-covered, polyester thread (R50 Tex), conforming to CAN/CGSB-4.131. When material with the CADPAT™ - Temperate Woodland design is being sewn, the colour must be Canadian Average Green in accordance with Sealed Pattern DSSPM 281-01. When material with the CADPAT™ - Arid design is being sewn, the colour must be Light Sand as shown on Sealed Pattern DSSPM 253-02. Unless otherwise specified, all other garment components must be matched for thread colour.

3.4.14.2 Thread for serging. The thread must be polyester staple thread, R40 Tex conforming to CAN/CGSB-4.139. When material with the CADPAT™ - Temperate Woodland design is being sewn, the colour must be Canadian Average Green in accordance with Sealed Pattern DSSPM 281-01. When material with the CADPAT™ - Arid design is being sewn, the colour must be Light Sand as shown on Sealed Pattern DSSPM 253-02. Unless otherwise specified, all other garment components must be matched for thread colour.

3.4.15 Label. A marking label must be made in accordance with D-80-001-055/SF-001 with care instructions in accordance with CAN/CGSB-86.1-2003 and positioned as stated in para 3.11. The colour for the labels used for Type I Jacket must be Canadian Average Green in accordance with Sealed Pattern DSSPM 281-01. For Type II Jackets, the colour must be Light Sand as shown on Sealed Pattern DSSPM 253-02.

3.5 Cutting

3.5.1 Jackets must be cut using duplicates of Government-supplied paper patterns. These paper patterns include seam allowance but do not include ‘make-up’ allowance. The contractor must be responsible for any changes which may be required for ‘make-up’ allowance to suit his production methods, but the design, grade or the requirements specified herein must not be changed.

3.5.2 Shell parts of each Jacket must be cut in the direction of the warp as shown on the paper patterns.

3.5.3 The shell parts of each garment must be cut from the same piece of shell material with the exception of the yoke facings, pocket facing, semi-cargo pocket welts, and rank tab which may be cut from separate lay or ends of shell material.

3.5.4 The specified materials must be cut and used in accordance with best commercial standards and practices.

3.6 Sewing.

3.6.1 All seams and stitchings must be in accordance with CAN/CGSB-54.1-M.

3.6.2 All stitching must be either lock stitch Type 301 or chain stitch 401 conforming to CAN/CGSB-54.1-M, having not less than 8 nor more than 10 stitches per inch (2.5 cm).

3.6.3 Seams. Seams must be a minimum of 3/8-inch (9.5 mm) wide or as otherwise specified.

3.6.4 The ends of all lock stitched seams and stitchings, also breaks in thread, must be securely backstitched.

3.6.5 The stitches must present a regular even appearance without fabric pucker and must be free from skips that may result from faulty machine thread tension or other stitching malfunctions.

3.6.6 Where seaming, turning and stitching are specified, the edges must be properly worked out before stitching.

3.6.7 Where seaming and serging are specified, it may be done in one or two operations.

3.6.8 Hook and loop fastener tape. Hook and loop fastener tape must be stitched around all edges 1/8-inch (3.2 mm) gauge. Care must be taken to ensure stitching is formed into the hook and loop portion.

3.6.8.1 When tapes wider than 1-inch (2.5 cm) are used, they must be stitched around all edges and through the centre or have an ‘X’ enclosed in the box.

3.6.8.2 For best results, a 110 (#18) needle with round point should be used to stitch the tape.

3.6.9 Bartacks. Bartacks must be 1/2-inch (12.7 mm) long and must have not less than 20 cover stitches.

3.6.10 Serging. Serging must be done using a three-thread serger with not less than 10 stitches per inch.

3.6.11 Buttonholes. Buttonholes must be gimp reinforced eyelet type, with not less than 22 stitches per inch (2.5 cm). The ends must be fishtailed or bartacked. Only the eyelet of the buttonhole must be cut for extrusion of the drawcord purposes, unless otherwise specified.

3.6.12 Snap fasteners. When snap fasteners are being inlaid, the contractor may add reinforcement under the shell material as required. Careful consideration must be given to the attaching force of the snap fastener machine to ensure that **all parts** of the snap fastener will remain attached and functional for the life of the garment.

3.6.13 Seam sealing. When specified, seams must be sealed in a manner which will ensure the integrity of the waterproof barrier layer in the garment in accordance with DSSPM 2-2-80-209. The following requirements must be met:

Table VIII - Requirements For Seams, Ends and Joins, Drill Holes and Stitching Lines, and Seamed Areas

Construction Details	FAULTS WHICH ARE NOT ACCEPTABLE
Seams	1. Tape which is not centered across the width of the seam; 2. Delamination along edges of tape, over seam allowance and stitching or across the width of the tape; 3. Bubbling; 4. Blistering; 5. Puckering; 6. Melting; and/or 7. Ends of threads which have not been trimmed.
Ends and joins	1. Loose ends and corners which have not bonded; 2. Rough edges or beads at the ends; and 3. An overlap at a join of less than 3/4-inch (19.1 mm).
Drill holes and stitching lines not in seams	1. Left uncovered without a designated exception.
Stiffness of seamed area	1. Marked increase of stiffness.

3.7 Construction

3.7.1 Loop fastener tape for name tape. A piece of loop fastener tape measuring 6-inches (15.2 cm) long by 1-inch (2.5 cm) wide must be positioned on the bottom of the right side front yoke piece, as indicated by the paper patterns, and stitched around all edges.

3.7.2 Front yoke closure. A piece of loop fastener tape 1-inch (2.5 cm) long by 3/4-inch (19.1 mm) wide must be centred on the face side of the left and right side front yoke facing pieces, as indicated on the paper patterns, and stitched around all edges.

3.7.3 Fold back for reflector tape. One piece of hook fastener tape 6-inches (15.4 cm) long by 1-inch (2.5 cm) wide must be centred on the underside of the yoke fabric on both front yoke facings, as indicated on the paper patterns, and stitched all around the edges.

3.7.4 Front yoke reflector tape assembly (Figure 5). Two front reflector tape assemblies must be made - one for the left and another for the right front yoke facings.

3.7.4.1 One piece of reflector tape measuring 6-inches (15.2 cm) long by 1-inch (2.5 cm) wide must be stitched to an equal length of loop fastener tape and two pieces of herringbone twill tape 2-1/8-inches (5.4 cm) long by 1-inch (2.5 cm) wide. The reflector tape must overlap the herringbone twill tape by 1/4-inch (6.4 mm) and must have both ends aligned with twill tape end. The reflector tape assembly must be stitched at 1/16-inch (1.6 mm) gauge. The thread colours must be the following: for the upper thread – silver grey and for the lower thread – coloured to match the shell.

3.7.4.2 The front reflector tape assembly must be placed face down, twill tape towards the front yoke bottom edge. The twill tape must be positioned and stitched at 1/16-inch (1.6 mm) gauge to the yoke facing piece ensuring that the reflector tape assembly is positioned so that the hem of the yoke does not overlap the top of the reflector tape when assembly is in use.

3.7.4.3 The yoke hem must be folded up and stitched at 1/16-inch (1.6 mm) gauge. The yoke hem and the top venting system of the bottom front, must be seamed at 3/8-inch (9.5 mm) gauge through all plies. This seam must be sealed.

3.7.4.4 The front must have a piece of hook fastener tape measuring 1-inch (2.5 cm) long by 3/4-inch (19.1 mm) wide centred, and seamed around all edges, at the upper venting system and affecting proper closure with the yoke.

3.7.5 Front pockets. Each front must have a semi-cargo pocket with side accessible hand warmer pocket and ear defender retaining tab.

3.7.5.1 A pleat measuring 1/2-inch (12.7 mm) must be placed at the upper and lower corners, 1-inch (2.5 cm) from outer edge. The pleat must fold towards the side seam, on the outside of the pocket and must be stitched in place.

3.7.5.2 Two pieces of hook fastener tape measuring 2-inches (5 cm) long by 3/4-inch (19.1mm) wide must be stitched around all edges, to the top of the pocket, positioned as marked on the paper patterns.

3.7.5.3 Pocket welt. The pocket welt must be made of one layer of shell material seamed to the wrong side of the pocket top, turned, folded in half with raw edge folded under 1/2-inch (12.7 mm) and stitched at 1/16-inch (1.6 mm) gauge.

3.7.5.4 Hand warmer pocket. The pocket must be lined with shell material. As shown on the sealed pattern, the material side that is next-to-hand must be the knit portion of the fabric. The pocket lining must be placed over the pocket and seamed along the outer edge and must finish at the welt. The pocket must be turned right side out and stitched at 1/8-inch (3.2 mm) gauge. The lining at the welt must be clipped to the seam and folded under. The remaining edges must be stitched together at 1/4-inch (6.4 mm) gauge.

3.7.5.5 Pocket flap. The flap must be made of one layer of shell material. Each flap must have two pieces of loop fastener tape measuring 2-inches (5 cm) long by 3/4-inch (19.1 mm) wide stitched around all edges to ensure proper closure with the pocket front.

3.7.5.5.1 The flaps must be folded in half, right sides together, seamed across the ends, turned and stitched along three edges at 1/8-inch (3.2 mm) gauge.

3.7.5.6 Ear defender tab. A piece of webbing measuring 12-inches (30 cm) long by 3/4-inch (19.1 mm) wide must be heat fused at both ends. A male snap fastener must be placed face up, 1-5/8 inches (4.1 cm) from one end. A female snap fastener must be placed face down, 7/8-inch (22.2 mm) from other end.

3.7.5.6.1 The ear defender tab must be placed underneath the flap, positioned at the notch shown on the paper patterns, with the male fastener at the top and facing the flap. The raw edges of the flaps must be stitched together at 3/16-inch (4.8 mm) gauge including the ear defender tab.

3.7.5.6.2 The flap must be placed over the pocket assembly. With edges together and pocket lining seam allowance folded under, the flap and pocket lining must be seamed at 3/16-inch (4.8 mm) gauge.

3.7.5.6.3 Both ends of the welt must be folded under and securely backstitched or bartacked to the pocket flap, through all layers.

3.7.5.7 Pocket and flap assembly. Pocket and flap assembly must be positioned and centred to their respective fronts with raw edges folded under. The bottom inner corner must be folded under into a 45º angle. Stitching must start from the bottom of the welt for a distance of 1/2-inch (12.7 mm) on the outer side of the pocket. Leaving a 6-inch opening, stitching must continue on outer side and bottom of pocket and stop at 45º inner corner. Stitching must begin on the inner side of the pocket directly above the 45º corner and stop at the bottom of the welt. Stitching must be at 1/16-inch (1.6 mm) gauge and must be sealed.

3.7.5.8 The flap must be stitched to the front at 1/4-inch (6.4 mm) gauge. Care must be taken to ensure flaps affect proper closure with pocket. Stitching must be sealed.

3.7.6 Back.

3.7.6.1 Fold back for reflector tape. Two pieces of hook fastener tape measuring 8 inches (20.4 cm) long by 1 inch (2.5 cm) wide must be positioned on the back yoke facing fabric as per markings on the pattern piece. It must be stitched all around the edges.

3.7.6.2 Back yoke reflector tape assemblies (2). One piece of reflector tape measuring 8-inch (20.4 cm) long by 1-inch (2.5 cm) wide must each be stitched to an equal length of loop fastener tape. Twill tape measuring 3-1/8 inch (7.9 cm) long by 1-inch (2.5 cm) wide must be aligned with the outside edges of the reflector tape with one edge sandwiched in the seam.

3.7.6.2.1 The reflector tape must overlap the twill tape by 1/4-inch (6.4 mm). The reflector tape and the loop fastener tape must be stitched together at 1/6-inch (1.6 mm) gauge. The upper thread must be silver grey and bottom thread must match the underside of the shell material.

3.7.6.2.2 The front of the reflector tape assembly must be placed face down with the bottom aligned to the finished edge of the back yoke facing and the twill tape towards the back yoke facing bottom edge. Twill tape must be stitched at 1/8-inch (3.2 mm) gauge along the bottom edge ensuring that the reflector tape assembly is positioned so that the hem of the back yoke does not overlap the top of the reflector tape when assembly is in use.

3.7.6.2.3 Another reflector tape assembly must be positioned on the back yoke facing fabric 2 inches (5.0 cm) apart.

3.7.6.2.4 The yoke hem must be folded up and stitched at 1/16-inch (1.6 mm) gauge. The yoke hem and the top venting system of the back must be seamed at 3/8-inch (9.5 mm) gauge through all plies. This seam must be sealed.

3.7.6.3 Back yoke facing closure. Two pieces of loop fastener tape 1 inch (2.5 cm) long by 3/4-inch (19.1 mm) wide must be positioned on the back yoke facing piece, as shown on the paper patterns, and stitched all around the edges.

3.7.6.3.1 Two pieces of hook fastener tape measuring 1 inch (2.5 cm) long by 3/4-inch (19.1 mm) wide must be positioned on the back piece, seamed around all edges, affecting proper closure with the loop fastener tape on the back yoke facing piece.

3.7.7 Sleeves. The sleeves must be raglan sleeves with elbow patches. Each sleeve must have a slide fastener vent system at the underarm seam. The sleeves must be seamed to their respective armholes and stitched at 1/16-inch (1.6 mm). The sleeve must overlap the body. The seam and stitching must be sealed.

3.7.8 Shoulder tab (left sleeve only) (Finished Shoulder Tab detail, Figure 5). A tab of two layers of shell material must be seamed, turned and stitched 1/4-inch (6.4 mm) gauge. The finished size of the tab must be 2-1/2 inches (6.3 cm) high by 2 inches (5.0 cm) wide.

3.7.8.1 A piece of loop fastener tape measuring 2-inches (5.0 cm) wide by 2-inches (5.0 cm) long must be stitched to the underside of the tab.

3.7.8.2 A piece of loop fastener tape measuring 1-inch (2.5 cm) wide by 2-inches (5.0 cm) long must be placed over the bottom portion of the topside tab and stitched around all edges.

3.7.8.3 The shoulder tab must be centred over the left sleeve cap and basted in place to facilitate joining. A piece of hook fastener tape measuring 2-inches (5.0 cm) wide by 2-inches (5.0 cm) long must be seamed to the left sleeve cap. The tape must be placed to affect proper closure with the shoulder tab.

3.7.8.4 The flag patch piece must be placed on the underside (knit portion) of the shell fabric over the stitching created by the shoulder tab piece. **This piece must not be attached to the shell by sewing but by being completely taped with sealing tape.**

3.7.9 Buttonhole pass-through. One buttonhole reinforced with a layer of shell material must be positioned on each sleeve as marked on the paper patterns. For functional purposes, it is important that the eyelet of this buttonhole must be cut with a 3/4-inch (1.9 cm) opening.

3.7.10 Sleeve pockets (Figure 6). Each sleeve must have an angled semi-bellows pocket. There must be loop fastener tape located on the front and pocket flap. There must be a buttonhole eyelet in the bottom welt for drainage.

3.7.10.1 As indicated on the paper patterns, two buttonhole eyelets must be positioned on the bottom welt. The top of the pocket must be folded 3/8-inch (4.8 mm), folded again 1-inch (2.5 cm), and sewn at 1/8-inch (3.2 mm) gauge. A pleat must be placed from the edge on the pocket welt and sewn. At the lower pocket corner, the side and bottom welt must be seamed at 1/4-inch (6.4 mm) gauge. The side and bottom welts must be folded and topstitched at 1/8-inch (3.2mm) gauge.

3.7.10.2 Two pieces of loop fastener tape measuring 2-inches (5.1 cm) wide by 6-3/4 inches (17.0 cm) long must be centred on the pocket front and sewn around all edges.

3.7.10.3 Sleeve pocket flap. The sleeve pocket flap must be made of one layer of shell material. The flaps must be folded in half, right side together, seamed across the ends, turned and stitched along three edges at 1/8-inch (3.2 mm) gauge.

3.7.10.3.1 A piece of loop fastening tape measuring 4-inches (10.2 cm) long by 2-inches (5.1 cm) wide must be centred width wise on the front of the pocket flap and stitched around all edges.

3.7.10.3.2 A piece of webbing measuring 4-inches (10.2 cm) long by 1-inch (2.5) wide must be heat fused at both ends and folded in half to create a tab. One piece of hook fastener tape measuring 4-inches (10.0 cm) long by 3/4-inch (19.1 mm) wide must be centred and stitched all around the edges with the ends of the webbing tab included in the topmost stitches.

3.7.10.4 The sleeve pockets must be positioned to their respective sleeves with the raw edges folded under, seamed at 1/16-inch (1.6 mm) gauge and must be sealed. The top corners of the pocket must be secured with backstitching or bartacks.

3.7.10.5 The pocket flap must be placed over the sleeve pocket assembly. With the edges together and folded under 1/4-inch (6.4 mm), the flap must be seamed at 3/8-inch (4.8 mm) gauge and must be sealed."

3.7.11 Elbow reinforcement patches. Each elbow patch must be placed on their respective sleeve, face up with raw edges folded under and double-needle stitched. This stitching must be sealed on the underside of the shell fabric.

3.7.12 Cuff suppression tab. A piece of hook fastener tape measuring 2-inches (5 cm) long by 3/4-inch (1.9 cm.) wide must be centred on the inner side of the wrist tab, as shown on the paper patterns, and stitched around all edges. The tab must be folded in half, right sides together, seamed across the ends, turned right side out and stitched at 1/16-inch (1.6 mm) gauge.

3.7.13 Cuff closure. A piece of loop fastener tape measuring 8-inches (20.3 cm) long by 3/4-inch (1.9 cm.) wide must be placed on the front section of the sleeve, as shown on the paper patterns. The fastener tape must be stitched around all edges and this stitching must be sealed.

3.7.14 Underarm venting system (Figure 7). The underarm vent opening on the front portion of the garment must be properly worked out. A two-way water resistant slide fastener (with the polyurethane coating facing inside) must be centred under the vent opening and double-needle stitched across each end and front edge.

3.7.15 Underarm seam and side seam. The front and back must be joined along the underarm vent and yoke seam in one continuous operation. The back tape of the slide fastener on the underarm venting system must be caught in this seam. The cuff suppression tab must be included in this seam and must be placed in an angle to affect proper closure with loop fastener tape. As an alternative, the tab may be stitched to the seam prior to joining the sleeve together. The arm seams must be sealed.

3.7.16 Side suppression system (Figure 4). A two-way slide fastener with cover must be seamed to each bottom side seams.

3.7.16.1 A closed slide fastener must be seamed face down on the bottom side seam with stopper 3/4-inch (19.1 mm) below the notch. The bottom tape of the slide fastener must be folded over and caught in this seam.

3.7.16.2 The top corner must be clipped, slide fastener turned inside and stitched along sides and top at 1/16-inch (1.6 mm) gauge.

3.7.17 Side suppression cover. A cover must be placed over each slide fastener. The cover must be placed on the front section, closing towards the back section, as shown on sealed sample.

3.7.17.1 The bottom edge of the cover must be folded up at the notches and stitched at 1/16-inch (1.6 mm).

3.7.17.2 A female snap fastener must be inlaid on the inner ply as indicated on the paper patterns. The fastener must be reinforced with two pieces of shell material.

3.7.17.3 The cover must be folded in half, wrong sides together and stitched along the fold at 1/4-inch (6.4 mm) gauge. The stitching must break into a 45º creating a pocket for the snap fastener. The stitching must continue to the bottom into a 1/16-inch (1.6 mm) gauge stitch, to the side edge.

3.7.17.4 The raw edge of the cover must be placed along the slide fastener stitching, 1-inch (2.5 cm) from the bottom edge. The cover must be double stitched at 3/8-inch (9.5 mm) gauge, trimmed down to 3/16-inch (4.8 mm), folded over and stitched along the fold and top at 1/4-inch (6.4 mm) gauge. The cover seams must be sealed.

3.7.18 Lining retainer tabs. A retainer tab, made of shell material, measuring 1-inch (2.5 cm) long by 4-inches (10 cm) wide must be centred on the underside of each side seam at the waistline and stitched along the bottom edge at 3/8-inch (9.5 mm).

3.7.19 Drawcord waist channel. Two buttonholes for the drawcord outlets must be positioned on the front waist. The buttonholes must be positioned as indicated on paper pattern and must be reinforced with a layer of shell fabric.

3.7.19.1 A drawcord must be placed over the waist area and extracted to the inside through the buttonholes.

3.7.19.2 The drawcord waist channel must be centred evenly along the waistline, on the outside shell. Top and bottom raw edges must be folded under and stitched at 1/8-inch (3.2 mm) gauge. The drawcord must be included in the channel, but not caught in any stitching.

3.7.19.3 The top edges of the pocket flaps must be included in the bottom stitching of the drawcord waist channel. All stitching, including the lining retainer tab, must be sealed.

3.7.20 Cordlock and tape assembly. Each drawcord end must have a cordlock and twill tape assembly.

3.7.20.1 A piece of herringbone twill tape measuring 2-inches (5.0 cm) long by 1/2-inch (12.7 mm) wide must be threaded through each lock attachment slot forming a retaining tape loop. The ends of the twill tape must be stitched together.

3.7.21 Waist drawcord. A cordlock and tape assembly must be positioned at each drawcord outlet and stitched in place. The drawcord ends must be threaded through a cordlock and knotted.

3.7.22 Outer collar. The slide fastener portion of a two-way slide fastener, without the sliders, must be centred on the outer collar with the neckline raw edge of the collar and the edge of the fastener tape seamed together.

3.7.22.1 Collar must be seamed to the neckline of the jacket with slide fastener caught between the shell and collar. The collar must be turned up and stitched at 1/16-inch (1.6 mm) gauge with the body overlapping the collar.

3.7.23 Hidden front chest pockets (Figure 8).

3.7.23.1 Bottom pocket bag. A pocket facing (made from shell material) must be placed on the bottom pocket bag (made from mesh material), raw edge folded under and stitched at 1/16-inch (1.6 mm) gauge. A piece of loop fastener tape measuring 2-inches (5.0 cm) long by 3/4-inch (19.1 mm) wide must be centred onto the facing and stitched around all edges.

3.7.23.2 Pencil pocket. A pencil pocket (made of lining material) must be located in each hidden pocket.

3.7.23.3 The top of the pencil pocket must be folded under for 1-inch (2.5 cm), raw edge folded under and stitched at 1/16-inch (1.6 mm) gauge.

3.7.23.4 The outside and bottom edge must be turned under and stitched to the pocket bag at 1/16-inch (1.6 mm) gauge. The top corner must be securely backstitched. A row of stitching

must be centred on the pocket, parallel to the edge. This top stitch must be securely backstitched.

3.7.23.5 Top pocket bag. A pocket facing (made from shell material) must be placed on the top pocket bag (made from mesh material), raw edge folded under and stitched at 1/16-inch (1.6 mm) gauge. A piece of hook fastener tape measuring 2-inches (5.0 cm) long by 3/4-inch (19.1 mm) wide must be centred along the front raw edge of the pocket bag and stitched around all edges. Care must be taken to ensure the loop fastener tape will affect proper closure with hook fastener tape on the bottom pocket facing.

3.7.23.6 Top and bottom bag must be seamed and serged together along the raw edge.

3.7.24 Throat tab. The throat tab must be made from one piece of shell material.

3.7.24.1 The throat tab must be folded in half, right side together, seamed across the ends, turned to the outside and stitched at 1/16-inch (1.6 mm) gauge.

3.7.25 Front closure. The left side of the slide fastener tape must be placed on the left centre front and stitched into place. The top of the throat tab must be in line with the top of the slide fastener tape, as shown on the Sealed Pattern, and must be included in this seam.

3.7.25.1 The right side of the slide fastener tape must be placed on the right centre front and stitched into place.

3.7.26 Rank tab (Figure 5). A female snap fastener must be inlaid on the inner ply of the rank tab, 1-inch (2.5 cm) behind the pointed end. The fastener must be reinforced with two layers of shell fabric.

3.7.26.1 With right sides together, the inner and outer ply must be seamed along the sides and pointed end, turned and stitched at 1/16-inch (1.6 mm) gauge.

3.7.27 Fly system.

3.7.27.1 Left fly cover. The left fly cover must be made of two layers of shell material.

3.7.27.1.1 The inner ply of the left fly cover must be inlaid with five female snap fasteners. Each fastener must be reinforced with two layers of shell material. The fasteners must be positioned as indicated on paper patterns.

3.7.27.1.2 With right sides together, the inner and outer layers must be seamed along the edge and across the ends, turned and stitched at 1/16-inch (1.6 mm) gauge.

3.7.27.1.3 The rank tab must be centred onto the fly cover as shown on the paper patterns. The raw edge must be seamed at 1/4-inch (6.4 mm) gauge through all layers. The rank tab must be folded up and stitched at 1/4-inch (6.4 mm) gauge.

3.7.27.1.4 A male snap fastener must be inlaid through all plies, centred on the left fly cover, and positioned in order to affect proper closure with the rank tab. The rank tab must lay flat when closed.

3.7.27.1.5 Left fly cover must be placed on the left front, as positioned on the paper patterns, and must be double stitched at 1/4-inch (6.4 mm) gauge, folded over and stitched at 1/4-inch (6.4 mm) gauge. Care must be shown to ensure that the pocket bag is not caught in this seam. The seam must be sealed.

3.7.27.2 Right fly cover. The right fly cover must be made from one layer of shell material.

3.7.27.2.1 With right sides together, the fly cover must be folded in half and seamed across the ends, turned and stitched at 1/16-inch (1.6 mm) gauge.

3.7.27.2.2 Five male snap fasteners must be inlaid through all layers on the right fly cover. The fasteners must be positioned as indicated on the paper patterns.

3.7.27.2.3 Right fly cover must be placed on the right front, as indicated on the paper patterns, and must be double stitched at 1/4-inch (6.4 mm) gauge, folded over and stitched at 1/4-inch (6.4 mm) gauge. The seam must be sealed.

3.7.28 Lining assembly. The front and back mesh must be seamed and serged at the side. The marking and care label will be sewn onto the mesh lining positioned on the left side either in the chest area at 5-inches (12.7 cm) down from the neck seam and 1-inch (2.5 cm) from the zipper seam or it may also be positioned along the lining hem at 1-inch (2.5 cm) from the zipper seam. The label must be topstitched 1/8-inch (3.2 mm) gauge onto the mesh lining.

3.7.28.1 The hem facing must be sewn to the bottom edge of the mesh lining front and back, turned under and stitched at 1/4-inch (6.4 mm) gauge. The raw edge must be folded under and stitched at 1/8-inch (3.2 mm) gauge.

3.7.28.2 The tricot and mesh sleeve lining must be seamed and serged together. The sleeve lining must be joined to the front and back mesh in one continuous operation.

3.7.29 Hanger loop. A hanger loop of shell material must be made on an automatic looping machine. The width must be 5/16-inch (7.9 mm) with functional length of 2-1/2 inches (6.3 cm).

3.7.30 Inner collar. The inner collar must be seamed to the neckline of the lining. The hanger loop must be caught in this seam.

3.7.31 Body and lining joining. With the right sides together, the shell and lining must be seamed together along the collar edge and centre front. The shell and lining must be turned right side out and stitched at 1/8-inch (3.2 mm) gauge around outer edges of the centre front and collar.

3.7.32 Sleeve shell and sleeve lining finish at hem. With right sides, the sleeve hems must be seamed together and turned right side out.

3.7.32.1 The shell must be turned in 7/8-inch (22.2 mm) and stitched through all plies at 3/4-inch (19.1 mm) gauge. The stitching must start and finish at the underarm seam, ensuring the cuff suppression tab is not caught in this seam.

3.7.33 Lining retainer tabs. The raw edge of the retainer tabs / stays must be folded under and stitched to the hem facing at 1/8-inch (3.2 mm) gauge.

3.7.34 Front and centre back hems.

3.7.35 Front hem facing pieces. Two buttonholes (one on each piece) reinforced with a layer of shell material must be positioned on the front hem facing pieces for drawcord outlets. The buttonholes must be placed as shown on the paper patterns.

3.7.36 Front hem. The raw edge of the hem must be turned under 1/4-inch (6.4 mm) and the front hem facing piece placed over top with the edges turned under 1/4-inch (6.4 mm). The edge of the drawcord must be included in the front hem pieces, with ends protruding from the buttonholes. A cordlock and tape assembly must be positioned directly above the drawcord outlet and stitched in place.

3.7.36.1 The front hem and the facing pieces must be stitched at 1/16-inch (1.6 mm) gauge along the hem edge from fly cover to side suppression cover. The stitching must include the cordlock and tape assembly.

3.7.36.2 The drawcord end must be threaded through the cordlock and tape assembly and knotted.

3.7.36.3 The remaining drawcord end must be caught in the seam at the opposite end. Care must be taken to ensure the fly cover is not caught in this seam.

3.7.36.4 The side edge hem must be stitched along the edge.

3.7.37 Back hem facing pieces. One buttonhole reinforced with a layer of shell material must be positioned on each back hem facing piece for drawcord outlets as shown on the paper patterns.

3.7.38 Back hem assembly. With right sides together, the back hem facing pieces must be sewn together to form one piece. The raw edge of the back piece must be turned under 1/4-inch (6.4 mm) and the back hem facing piece placed over top with the edges turned under 1/4-inch (6.4 mm). The drawcord must be laced through the centre buttonholes and included in the hem, with the ends protruding from the side end buttonholes. Two cordlock and tape assemblies must be positioned directly above each drawcord outlet and stitched in place.

3.7.38.1 The hem must be stitched at 1/16-inch (1.6 mm) gauge along edge and both ends. The end of the webbing tape (of the drawcord and tape assembly) must be caught in this seam.

3.7.38.2 The ends of the drawcord must be threaded through the cordlocks and knotted.

3.7.38.3 A male snap fastener must be inlaid trough all layers, facing outward, positioned as marked on the paper patterns.

3.7.39 Shock cord holder. The shock cord holder must be made of one piece each of hook and loop fastener tape measuring 3-inches (7.6 cm) long by 3/4-inch (19.1 mm) wide and

a piece of webbing measuring 4-1/2 inches (11.4 cm) by 3/4-inch (19.1 mm) wide with heat sealed edges.

3.7.39.1 With one raw edge of the webbing piece folded 1/2-inch (1.3 cm) and the piece of hook fastener tape placed 1/4-inch (6.4 mm) from the folded edge, the hook fastener tape must be stitched to the webbing around all edges. The piece of loop fastener tape must be placed at the bottom of the right front hem, as shown on the sealed sample, and stitched all around the edges through all plies. The raw edge of the webbing will be caught in this seam. This seam must be sealed.

3.7.40 Hood.

3.7.40.1 Hood retaining tab. A piece of loop fastener tape measuring 9-1/2 inches (24 cm) long by 3/4-inch (19.1 mm) wide must be centred and included in the seam created when joining the upper back hood and lower back hood pieces.

3.7.40.2 With right sides together, the upper back hood and lower back hood pieces must be seamed, and stitched at 3/8-inch (9.5 mm) gauge. The upper piece must overlap the lower piece. This seam must be sealed

3.7.40.3 With the right sides together, the hood shell pieces and the combined upper and lower back hood piece must be seamed, turned and stitched at 1/16-inch (1.6 mm) gauge. The combined upper and lower back hood piece must overlap the sides. The seams must be sealed.

3.7.40.4 Each bottom corner of the hood shell pieces must have a buttonhole reinforced with a layer of shell material, positioned as shown on the pattern pieces.

3.7.40.5 A piece of hook fastener tape measuring 2-inches (5.0 cm) by 3/4-inch (19.1 mm) must be centred on the bottom of the hood at the neckline as shown on the pattern piece. The fastener must be stitched around all edges and seam sealed.

3.7.40.6 Bottom hood facing. With right sides together, the bottom hood facing pieces must be seamed and turned. The bottom hood facing piece (underside (knit portion) must be seamed at 3/8-inch (9.5 mm) gauge to the hood front channel.

3.7.40.7 Hood front facing. The elastic cord must be encased in the nylon hood channel piece. With right sides together, the hood front facing, the nylon hood channel, and hood front channel pieces must be seamed and stitched at 3/8-inch (9.5 mm) gauge.

3.7.40.8 With the ends of the drawcord protruding from the buttonholes and a cordlock and twill tape assembly positioned on each end, this piece must then be sewn to the hood. The edge of the twill tape will be caught in the seam of the hood and facing pieces. The assembly must be turned right side out, and stitched at 1/16-inch (1.6 mm) gauge all around.

3.7.40.9 The slide fastener portion of a two-way slide fastener, with the sliders, must be placed inside the neck edge of the hood. The fastener must be placed face down with the teeth 5/8-inch (15.9 mm) from the bottom edge and double needle stitched. The edge of the bottom hood facing will caught in this seam.

3.8 Measurements. Measurements must be as shown on the applicable Figures and as stated in the Scales of Measurements (see Table I).

3.9 Seam sealing.

3.9.1 The seam sealing equipment must be controlled and calibrated in accordance with the quality system requirement, to ensure process conformance. Time, pressure and heat must be verified periodically throughout the seam sealing operation and each time the equipment is started up.

3.9.2 A hydrostatic test using 3-1/2 psi for 3 minutes must be conducted on straight seams, curved seams and joint seams after every two hours of continuous operation. Tests must also be conducted after every 10 minutes of down time. There must be no leakage.

3.9.3 All seam sealing test results and verification must be recorded and documented as per the quality system requirements.

3.10 Pressing. The finished Jacket must be properly pressed in accordance with good commercial practice.

3.11 Marking and Care Label. A label measuring 5-1/2 inches (14.0 cm) long by 3-1/2 inches (8.9 cm) wide must be stitched around all sides to the mesh lining (see para 3.7.29). The label and marking must be in accordance with D-80-001-055/SF-001. Care symbols in accordance with CAN/CGSB-86.1-2003 must be included on the label. The marking must give the following information in French and English, printed in characters not less than 1/8-inch (3.2 mm) nor more than 1/4-inch (6.4 mm) in height, with the exception of the size which must be twice the size of the other characters. An example of the label is illustrated in Figure 9.

a. The abbreviated nomenclature:
   JACKET, WET WEATHER, CONVERGED
   BLOUSON IMPERMEABLE, CONVERGE
b. NATO Stock Number (NSN) for each size (numbers will be designated in the contract);
c. Size by height and chest (see Table I - Scale of Measurements);
d. NATO size (see Table I - Scale of Measurements);
e. Contract number;
f. If applicable, the name of the sub contractor must be identified on the label as initial(s) after the contract number;
g. For the name of the prime contractor, there must be no initials, logos, or trademarks;
h. Month and year of manufacture;
i. Care symbols (in accordance with CAN/CGSB-86.1-2003); and
j. Static Dissipative Garment Instructions

3.12 Finishing. The Jacket must be cleaned, smoothed and folded. Garments must be individually packaged in accordance with CFTPO-General. The abbreviated nomenclature for the label on the bags should read:

For Type I Converged Jacket, Hot/Wet Weather, Windbreaker, Static-Dissipative, CADPAT™ Temperate Woodland (TW) / Blouson convergente pour temps chaud ou pluvieux, coupe-vent, antistatique, DCAMC^{MC} RBT (régions boisées tempérées)

For Type II Converged Jacket, Hot/Wet Weather, Windbreaker, Static-Dissipative, CADPAT™ Arid Regions (AR) / Blouson convergente pour temps chaud ou pluvieux, coupe-vent, antistatique, DCAMC^{MC} RA (régions arides)

4 QUALITY CONTROL/INSPECTION

4.1 The contractor is responsible for the performance of all inspection requirements as specified herein. Contractors may utilize their own or any other inspection facility acceptable to the Government or its designated representative. The Government reserves the right to perform any of the inspections specified herein, where such inspections are deemed necessary to ensure materiel and services conform to the prescribed requirements. The contractor is responsible for ensuring that all materiel or services submitted to the government for acceptance comply with all requirements of the contract

5. PACKAGING

5.1 Packaging and packing. The packaging, packing and delivery must be in accordance with the terms of the contract.

6. NOTES

6.1 Ordering data. Procurement documents should specify the following:

a. Title and date of manufacturing data;
b. NATO stock number and size required;
c. Preproduction requirements (see 3.3);
d. Packaging and packing requirements (see 5.1);
e. The Design Authority; and
f. The Quality Assurance Authority.

6.2 Definition of terms.

6.2.1 Design Authority. The Design Authority is the Government agency responsible for the technical aspects of the design and changes to the design. Unless otherwise specified in the contract, the Design Authority is the Director, Soldier Systems Program Management (DSSPM).

6.2.2 Master sealed pattern. A master sealed pattern is the authorized prototype of the item to be produced, and is held only by the Government.

6.2.3 Sealed pattern. A sealed pattern is an exact duplicate of the master sealed pattern and is available to the manufacturer to be used as guide in production.

6.3 DND green procurement. The production of a product to this manufacturing data, or the evaluation of a product to this manufacturing data, may require the use of materials and/or equipment that could be hazardous. This manufacturing data does not purport to address all safety, health and environmental concerns, if any associated with its use. It is the responsibility of the user of this manufacturing data to establish appropriate safety, health and environmental practices and to determine the applicability of regulatory limitations prior to use.

6.4 Enquiries. Enquiries or recommendations for additions or deletions must be addressed to the Contracting Authority.

TABLE X – Converged Jacket, Hot/Wet Weather, Static Dissipative, CADPAT™ TW (Type I)

SIZE	NSN
6432	8415-20-001-7151
6436	8415-20-001-7152
6440	8415-20-001-7153
6736	8415-20-001-7154
6740	8415-20-001-7155
6744	8415-20-001-7156
6748	8415-20-001-7157
7036	8415-20-001-7158
7040	8415-20-001-7159
7044	8415-20-001-7160
7048	8415-20-001-7164
7052	8415-20-001-7165
7336	8415-20-001-7167
7340	8415-20-001-7171
7344	8415-20-001-7173
7348	8415-20-001-7181
7352	8415-20-001-7183
7640	8415-20-001-7184
7644	8415-20-001-7185
7648	8415-20-001-7188
7652	8415-20-001-7189
SPECIAL	8415-20-001-8901

TABLE XI – Converged Jacket, Hot/Wet Weather, Static Dissipative, CADPAT™ AR (Type II)

SIZE	NSN
6432	8415-20-000-8043
6436	8415-20-000-8042
6440	8415-20-001-7326
6736	8415-20-000-7035
6740	8415-20-000-6513
6744	8415-20-000-6515

SIZE	NSN
6748	8415-20-001-7294
7036	8415-20-000-6516
7040	8415-20-000-6517
7044	8415-20-000-6518
7048	8415-20-000-6519
7052	8415-20-000-6521
7336	8415-20-000-6522
7340	8415-20-000-6524
7344	8415-20-000-6525
7348	8415-20-000-6527
7352	8415-20-000-6530
7640	8415-20-000-6532
7644	8415-20-000-6533
7648	8415-20-000-6535
7652	8415-20-000-6536
SPECIAL	8415-20-002-0077

TABLE XII – Hoods for Converged Jacket, Hot/Wet Weather, Static Dissipative, CADPAT™ TW (Type I)

SIZE	NSN
A/A	8405-20-003-0852
32 (6432)	8405-20-003-0853
36 (6436, 6736, 7036, & 7336)	8405-20-003-0854
40 (6440, 6740, 7040, 7340, & 7640)	8405-20-003-0855
44 (6744, 7044, 7344, & 7644)	8405-20-003-0856
48 (6748, 7048, 7348, & 7648)	8405-20-003-0857
52 (7052, 7352, & 7652)	8405-20-003-0858

TABLE XIII – Hoods for Converged Jacket, Hot/Wet Weather, Static Dissipative, CADPAT™ AR (Type II)

SIZE	NSN
A/A	8405-20-003-0859
32 (6432)	8405-20-003-0860
36 (6436, 6736, 7036, & 7336)	8405-20-003-0861
40 (6440, 6740, 7040, 7340, & 7640)	8405-20-003-0862
44 (6744, 7044, 7344, & 7644)	8405-20-003-0863
48 (6748, 7048, 7348, & 7648)	8405-20-003-0864
52 (7052, 7352, & 7652)	8405-20-003-0865

TABLE I - SCALE OF MEASUREMENTS FOR THE
COVERGED JACKET, HOT/WET WEATHER, WINDBREAKER, STATIC-DISSIPATIVE, CADPAT

AUG 2007
OCT 2006
SEPT 2005

					MEASUREMENTS OF GARMENT														
MEASUREMENTS OF BODY					GIRTH MEASUREMENTS SLIDE FASTENER CLOSED			FULL LENGTH FROM COLLAR NECK SEAM				SLEEVE			HOOD				
SIZES BY HEIGHT AND CHEST	NATO SIZES	HEIGHT WITHOUT SHOES		CHEST OVER SHIRT	CHEST	WAIST	BOTTOM	FRONT	BACK	COLLAR EDGE TO EDGE AT NECK SEAM	BACK WIDTH AT BOTTOM OF YOKE	LENGTH AT UNDER ARM SEAM	WIDTH AT SCYE	SLEEVE BOTTOM (FULLY OPENED)	FRONT OPENING EDGE TO EDGE	FRONT TO BACK OVER CROWN	HOOD SLIDE FASTENER	SLIDE FASTENER LENGTH AT CENTRE FRONT	SLIDE FASTENER LENGTH AT SIDE
6432	5060-7585	5' 1' to 5' 3-1/2"	X-SHORT	29 - 32	44	40	41	25 1/2	31 1/4	19 1/4	20 3/4	20 1/2	22 1/2	11 1/2	32	19 1/4	17	25	7
6436	5060-8595			33 - 36	48	44	45		31 3/8	20 3/8	21 3/4		23 1/2	12		19 5/8	18		
6440	5060-9505			37-40	52	48	49		31 1/2	21 1/2	22 3/4		24 1/2	12 1/2		20	19		
6736	6070-8595	5'4" to 5' 6 1/2"	SHORT	33-36	48	44	45	27	32 7/8	20 3/8	21 3/4	21 1/2	23 1/2	12	32	19 5/8	18	26 1/2	7 1/2
6740	6070-9505			37-40	52	48	49		33	21 1/2	22 3/4		24 1/2	12 1/2		20	19		
6744	6070-0515			41-44	56	52	53		33 1/8	22 5/8	23 3/4		25 1/2	13		20 3/8	20		
6748	6070-1525			45-48	60	56	57		33 1/4	23 3/4	24 3/4		26 1/2	13 1/2		20 3/4	21		
7036	7080-8595	5'7" to 5'9 1/2"	REG.	33-36	48	44	45	28 1/2	34 3/8	20 3/8	21 3/4	22 1/2	24	12	32	19 5/8	18	28	8
7040	7080-9505			37-40	52	48	49		34 1/2	21 1/2	22 3/4		25	12 1/2		20	19		
7044	7080-0515			41-44	56	52	53		34 5/8	22 5/8	23 3/4		26	13		20 3/8	20		
7048	7080-1525			45-48	60	56	57		34 3/4	23 3/4	24 3/4		27	13 1/2		20 3/4	21		
7052	7080-2535			49-52	64	60	61		34 7/8	24 7/8	25 3/4		28	14		21 1/8	22		
7336	8090-8595	5'10" to 6'1/2"	TALL	33-36	48	44	45	30	35 7/8	20 3/8	21 3/4	23 1/2	24 1/2	12	32	19 5/8	18	29 1/2	8 1/2
7340	8090-9505			37-40	52	48	49		36	21 1/2	22 3/4		25 1/2	12 1/2		20	19		
7344	8090-0515			41-44	56	52	53		36 1/8	22 5/8	23 3/4		26 1/2	13		20 3/8	20		
7348	8090-1525			45-48	60	56	57		36 1/4	23 3/4	24 3/4		27 1/2	13 1/2		20 3/4	21		
7352	8090-2535			49-52	64	60	61		36 3/8	24 7/8	25 3/4		28 1/2	14		21 1/8	22		
7640	9000-9505	6'1" to 6'3 1/2"	X-TALL	37-40	52	48	49	31 1/2	37 1/2	21 1/2	22 3/4	24 1/2	26	12 1/2	32	20	19	31	9
7644	9000-0515			41-44	56	52	53		37 5/8	22 5/8	23 3/4		27	13		20 3/8	20		
7648	9000-1525			45-48	60	56	57		37 3/4	23 3/4	24 3/4		28	13 1/2		20 3/4	21		
7652	9000-2535			49-52	64	60	61		37 7/8	24 7/8	25 3/4		29	14		21 1/8	22		
TOLERANCE PLUS OR MINUS					1"	1"	1"	3/4	3/4	1/2	1/2	1/2	1/2	1/2	1/2	1/2	0	0	0

DIMENSIONS ARE IN INCHES

JHWWAS06

FIGURE 1 - FRONT VIEW - TYPE I AND II JACKETS

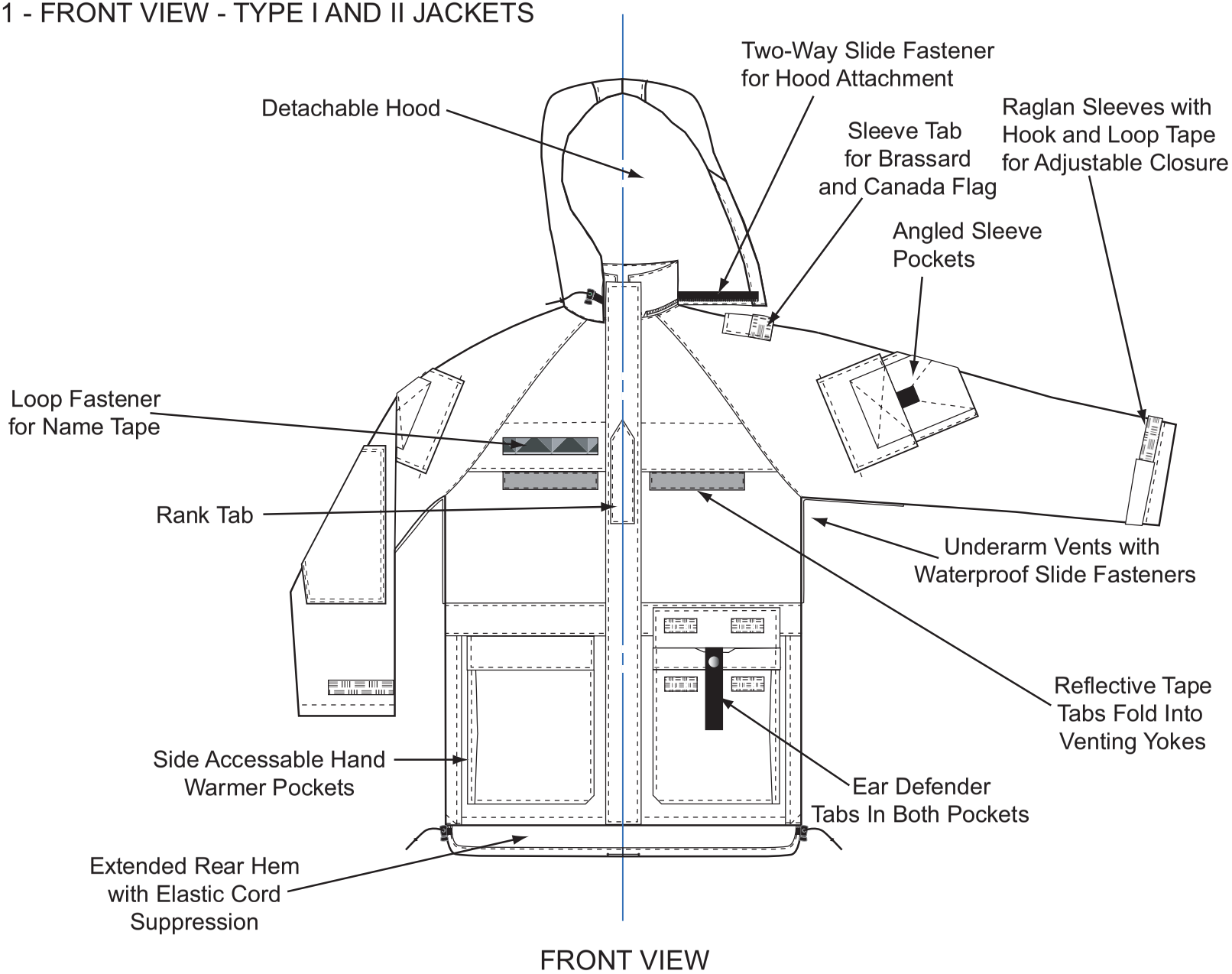

FRONT VIEW

FIGURE 2 - BACK VIEW - TYPE I AND II JACKETS

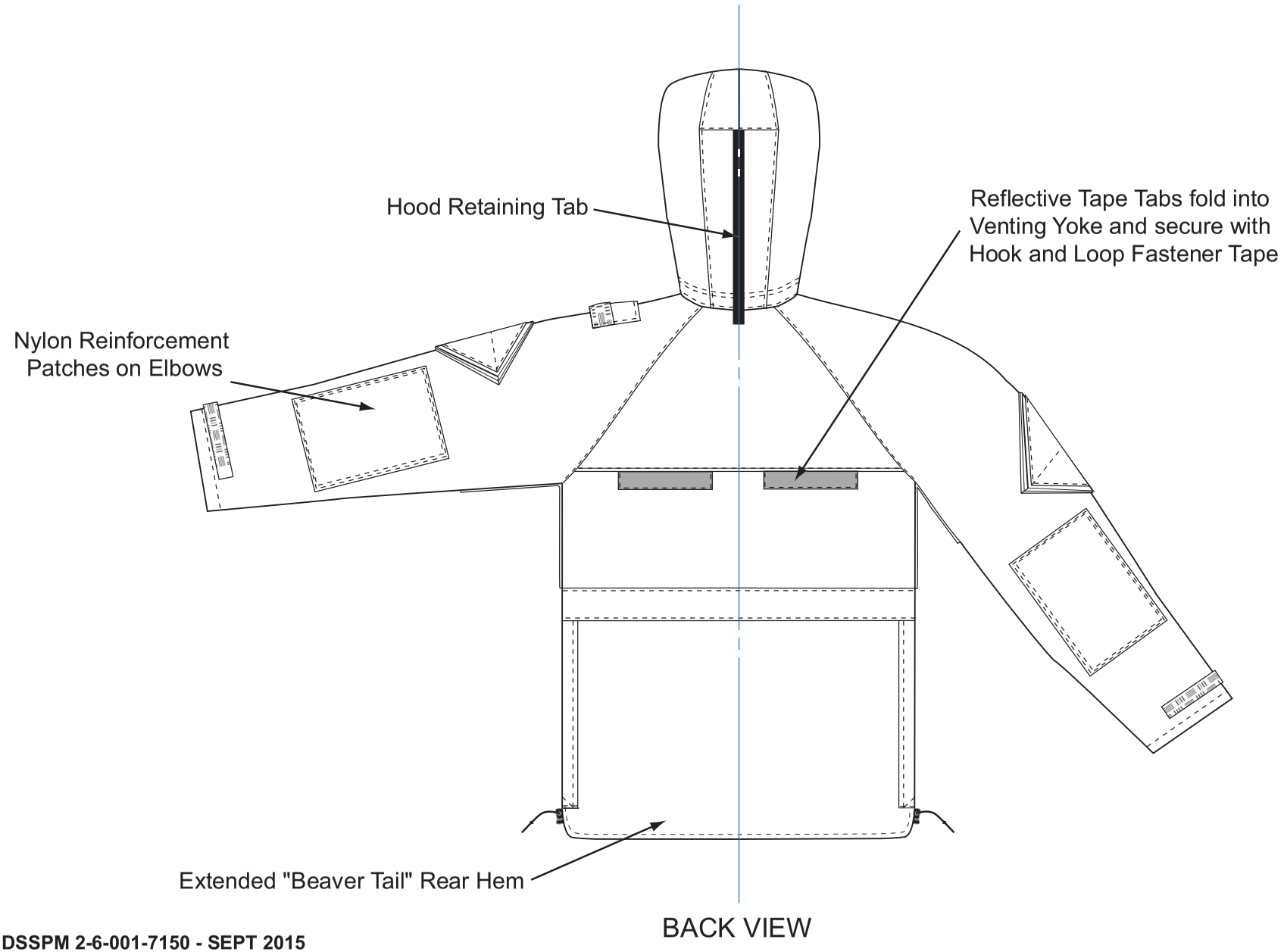

FIGURE 3 - DETACHABLE HOOD AND REFLECTOR TAPE ASSEMBLY DETAILS

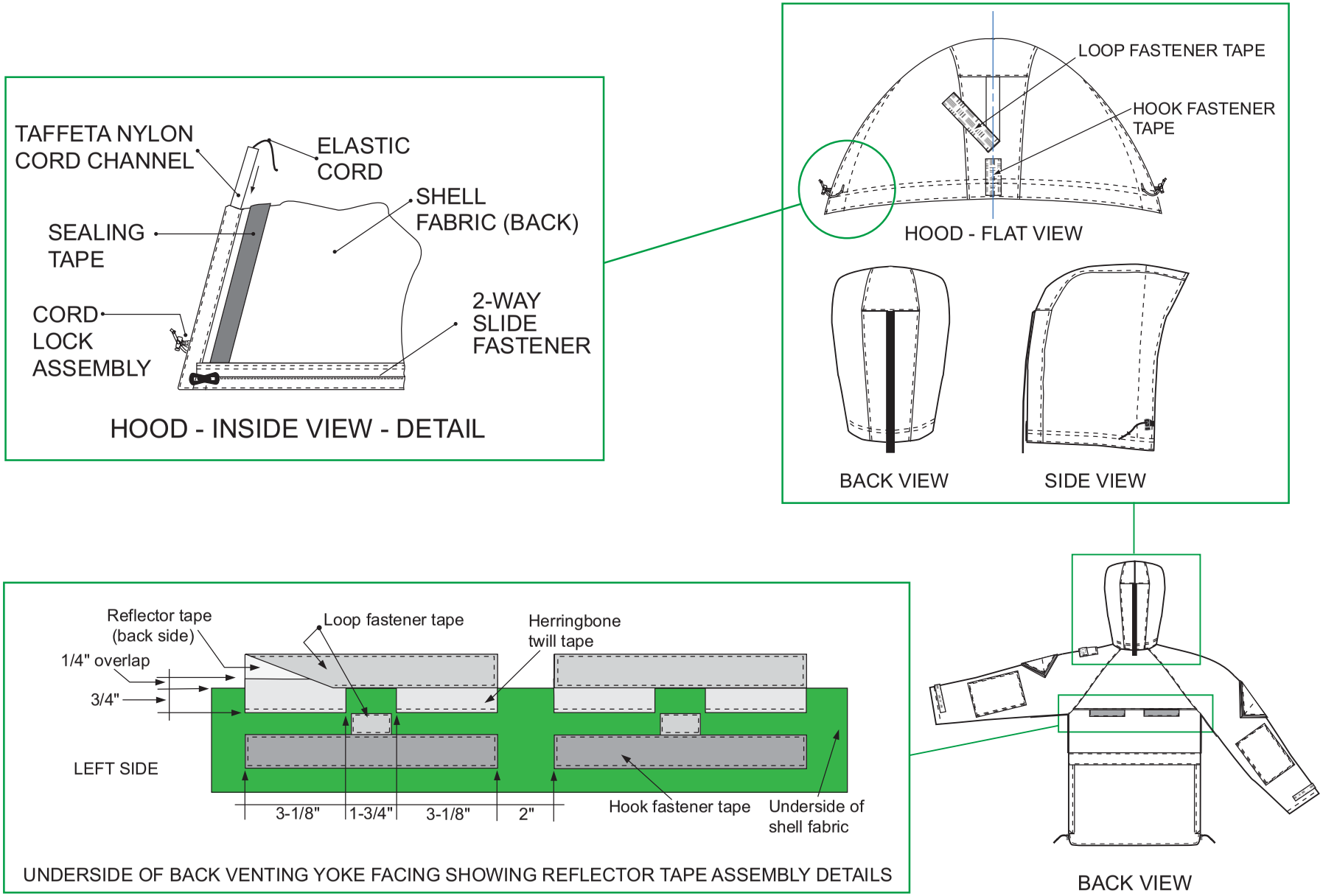

FIGURE 4 - RIGHT SIDE OF JACKET - INSIDE VIEW - SIDE SUPPRESSION SYSTEM

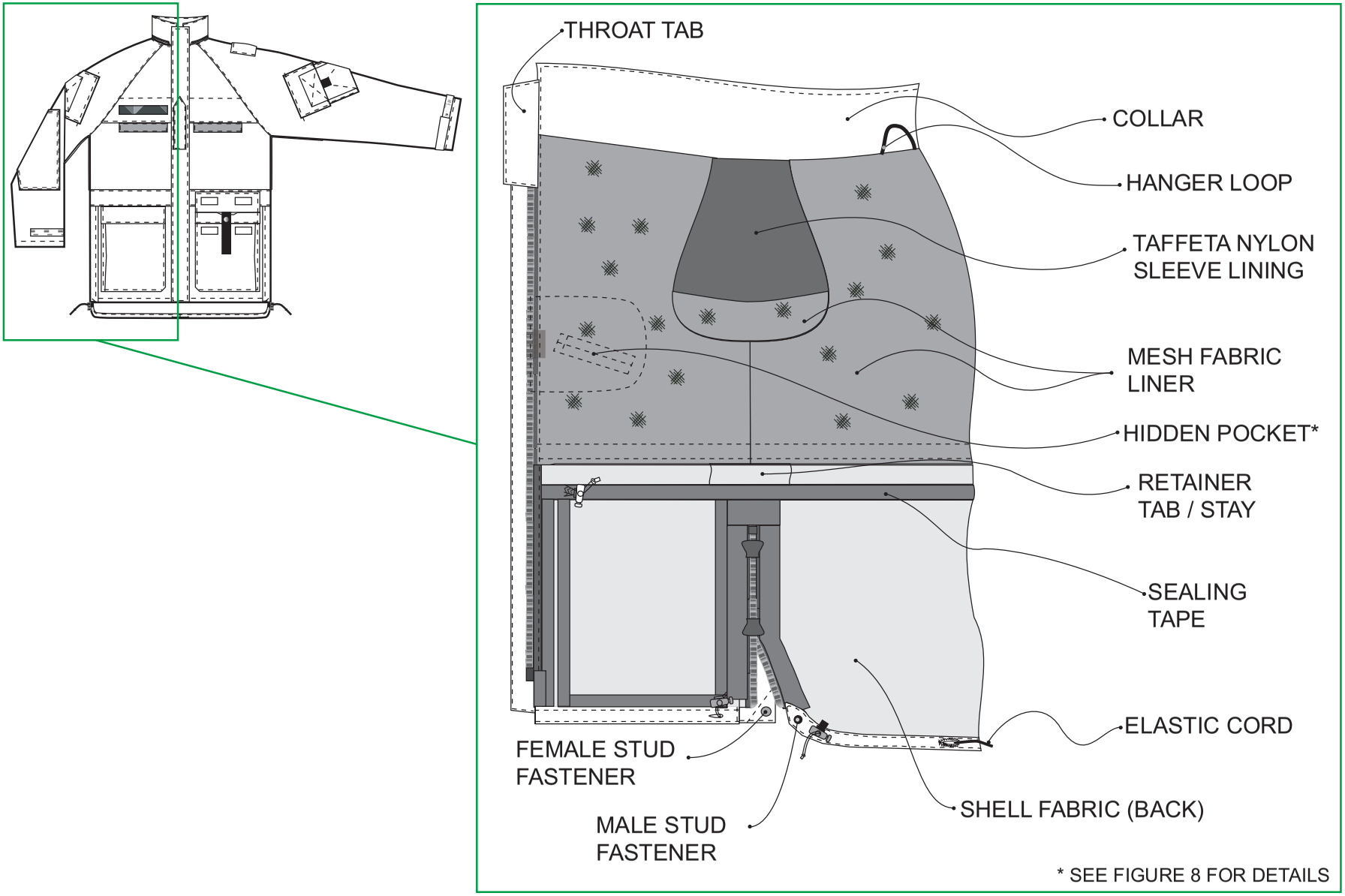

FIGURE 5 - FINISHED DIMENSIONS OF GARMENT COMPONENTS

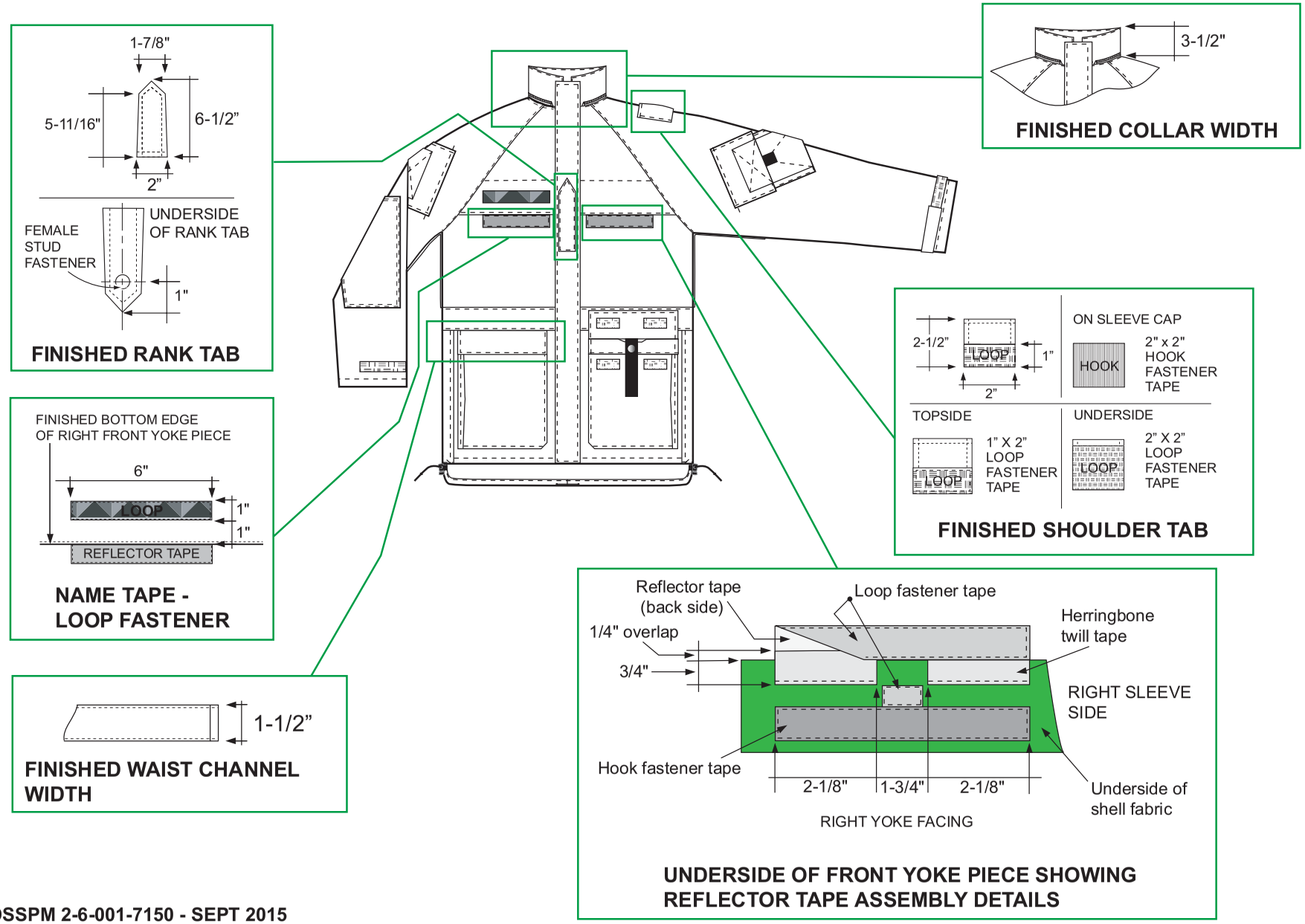

FIGURE 6 - FINISHED DIMENSIONS OF LOWER SEMI-CARGO POCKETS AND SLEEVE POCKETS

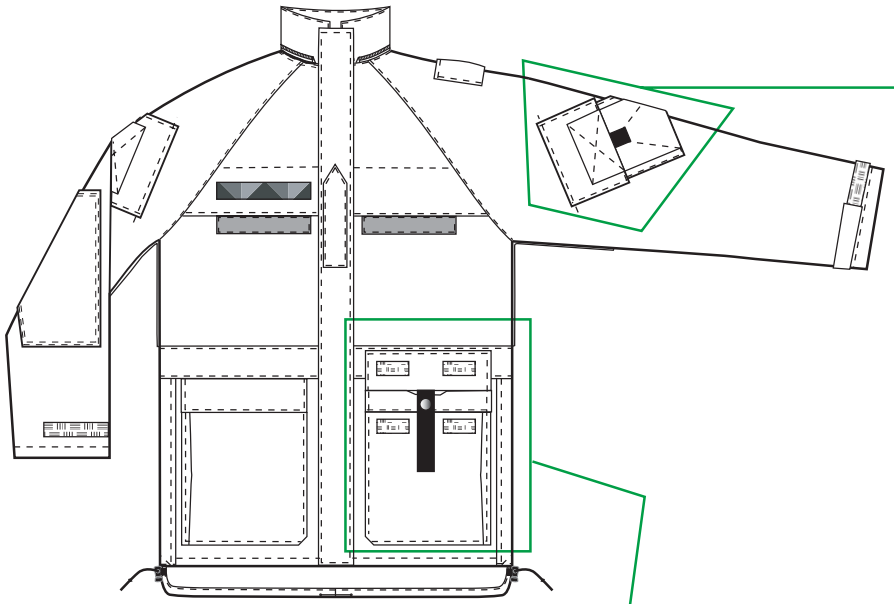

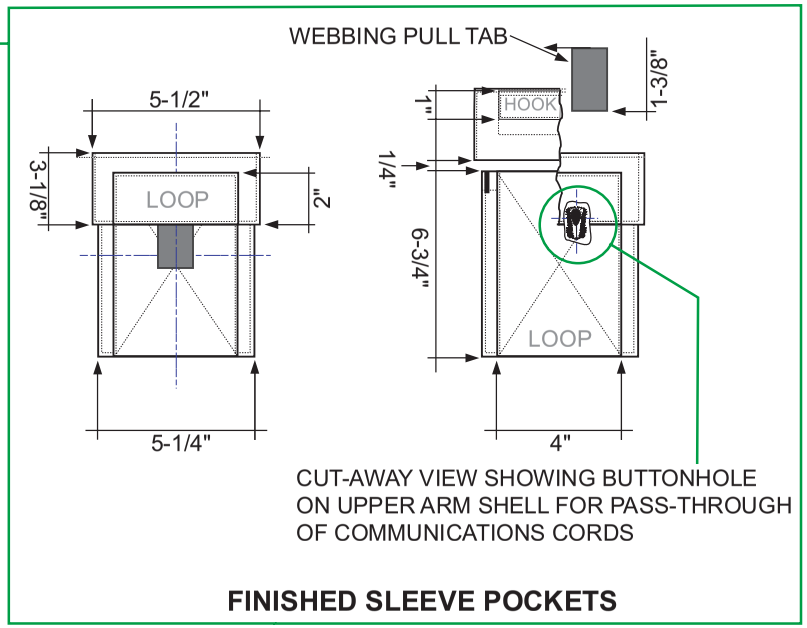

FINISHED SLEEVE POCKETS

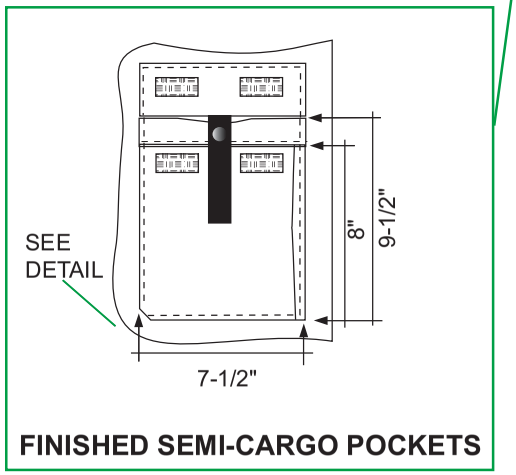

FINISHED SEMI-CARGO POCKETS

FIGURE 7 - UNDERARM VENTILATION SYSTEM

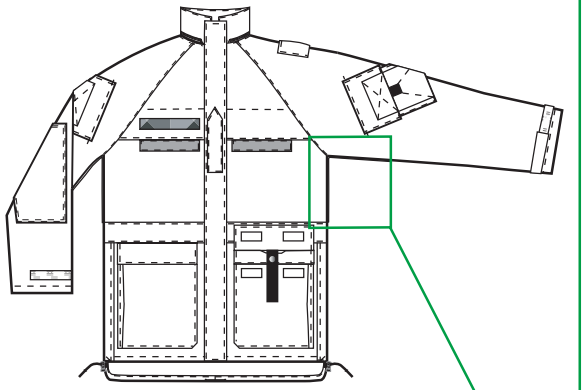

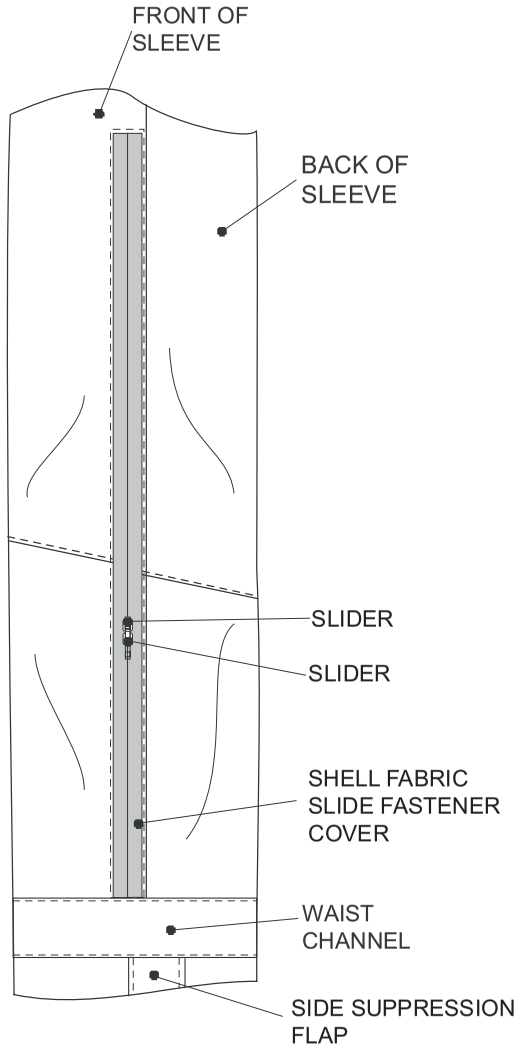

RIGHT SIDE UNDERARM VIEW - VENT CLOSED

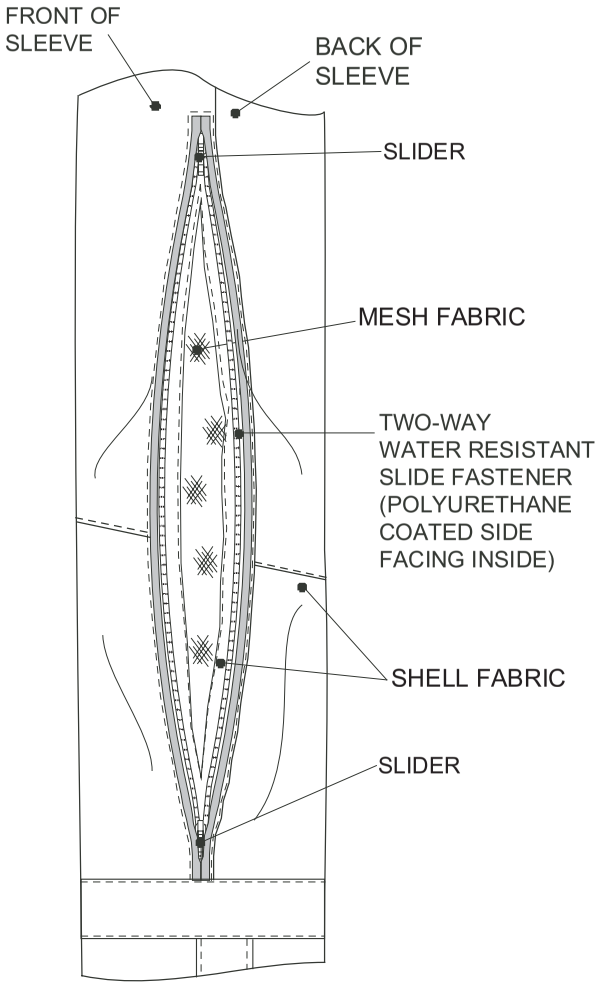

RIGHT SIDE UNDERARM VIEW - VENT OPENED

FIGURE 8 - HIDDEN FRONT CHEST POCKETS AND SLEEVE LINING DETAILS

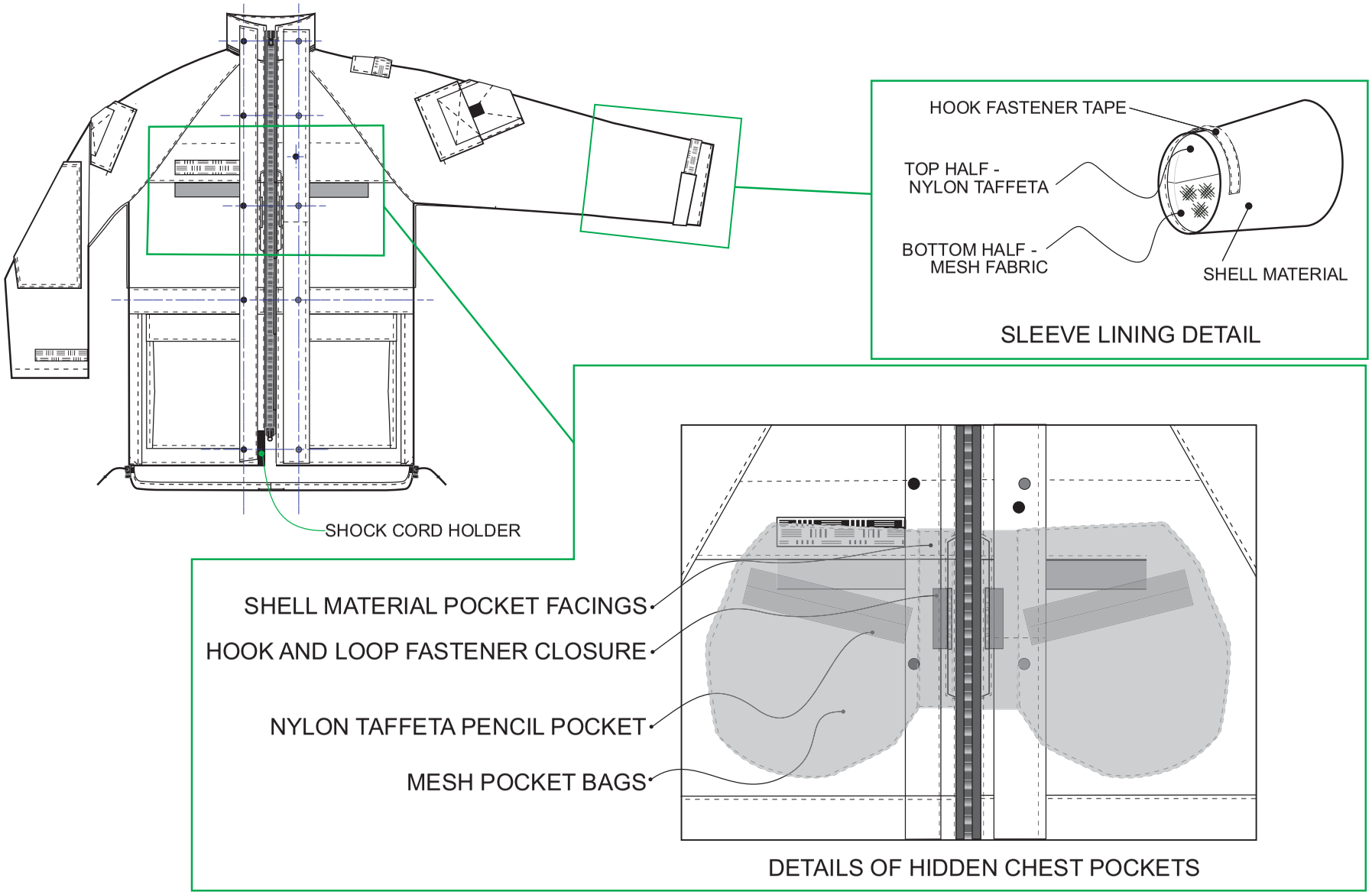

FIGURE 9 - MARKING AND CARE LABEL

JACKET, WET WEATHER, CONVERGED
BLOUSON IMPERMEABLE, CONVERGE
NSN/NNO: 8415-20-XXX-XXXX

SIZE/TAILLE 7040

NATO SIZE/TAILLE OTAN: XXXX-XXX
Contract No./No. de contrat: WXXXX-XXXXXX ABC
Contractor Name/Nom de l'entrepreneur: Jones & Company
Date de'of manufacture: mm/yy

50 C | Tumble dry on medium / Séchage par culbutage T/moyenne | Do not iron / Ne pas repasser | Do not bleach / Ne pas javeliser | Do not dry-clean / Ne pas nettoyer à sec

STATIC DISSIPATIVE GARMENTS

1. TO BE USED IN CONJUCTION WITH PROPER GROUNDING PROCEDURES FOR MAXIMUM PROTECTION AGAINST THE THREAT OF SPARK;
2. **DO NOT REMOVE GARMENTS WHEN WORKING IN AN ELECTRO-STATIC ENVIRONMENT**;
3. FOR BEST PERFORMANCE, KEEP GARMENT CLEAN. WASH SEPARATELY AND RINSE WELL;
4. IF SEVERE CONTAMINATION OCCURS RESULTING IN VISIBLE DAMAGE TO THE FABRIC, REMOVE GARMENT FROM SERVICE AS SOON AS POSSIBLE.

VÊTEMENTS À DISSIPATION DE CHARGE STATIQUE

1. A UTILISER AVEC DE BONNES PROCÉDURES DE MISE À TERRE POUR UNE PROTECTION MAXIMALE CONTRE LES RISQUES D'ÉTINCELLES;
2. **NE PAS ENLEVER CES VÊTEMENTS EN TRAVAILLANT DANS UN ENVIRONNEMENT ÉLECTROSTATIQUE**;
3. POUR UN MEILLEUR RENDEMENT, GARDER LE VÊTEMENT PROPRE. LAVER SEPAREMENT ET BIEN RINCER;
4. AU CAS DE CONTAMINATION GRAVE OCCASIONNANT DES DOMMAGES VISIBLES AU TISSU, METTRE LE VÊTEMENT HORS SERVICE AUSSITÔT QUE POSSIBLE.

5/8"

5-1/2"

3-1/2"

MANUFACTURING DATA FOR CONVERGED TROUSERS, HOT/WET WEATHER, WINDBREAKER, STATIC-DISSIPATIVE, CADPAT™

1. SCOPE

1.1 Scope. This manufacturing data covers the materials, design, construction and inspection requirements for Hot/Wet Weather/Windbreaker, Static Dissipative Trousers CADPAT™ worn by entitled members of the Land Force and Air Force.

1.2 Intended use. The trousers are usually worn with the Converged Jacket, Hot/Wet Weather / Windbreaker, Static-Dissipative, CADPAT™ TW and AR (in accordance with DSSPM 2-6-001-7150).

1.3 Classification. The trousers covered by this Manufacturing Data shall be the following types:

Type I	Converged Trousers, Hot/Wet Weather, Windbreaker, Static-Dissipative, CADPAT™ Temperate Woodland (TW) **NSN 8415-20-001-7213 A/A**
Type II	Converged Trousers, Hot/Wet Weather, Windbreaker, Static-Dissipative, CADPAT™ Arid Regions (AR) **NSN 8415-20-000-6538 A/A**

1.4 CADPAT™. The information contained herein is Copyright to Her Majesty the Queen of Canada, as is its associated pattern. The term CADPAT™, with and without extensions, is a registered Trademark belonging to the Department of National Defence (DND). Any of the data contained in this specification, and its associated pattern, may be used only for goods for Canada. The printed textile and any items made therefrom must be for the sole end use of DND. There must be no selling or offering for sale of goods incorporating the CADPAT™ pattern and colours to any person or entity other than Canada without the Minister's prior written authorization. Explicit in this is that any goods of not first quality produced must not be released, sold, or offered for sale, directly or indirectly, to any person or corporation other than Canada without the Minister's prior written authorization.

1.4.1 The information, data, know-how, formulas, algorithms, software, processes, systems, methods, designs, text, works, figures, tables, sketches, photographs, plans, drawings, specifications, samples, reports, names, inventions and/or ideas contained herein (hereinafter "Intellectual Property") is the exclusive property of Her Majesty The Queen in Right of Canada as represented by the Minister of National Defence (hereinafter referred as "DND"). No one has the right to reproduce, disclose, disseminate, or utilize, in any manner or in any form, this Intellectual Property, or any part thereof, without the prior written consent of DND. For further information on the restrictions applicable to this Intellectual Property, or to request consent from DND, please contact the Contracting Authority.

2. RELATED DOCUMENTS

2.1 The following documents form part of this Manufacturing Data to the extent specified herein. Unless otherwise specified, the issue or amendment of documents effective for a particular contract must be those in effect on the invitation to tender or the contract.

2.2 Government documents.

SPECIFICATIONS AND STANDARDS

D-80-001-055/SF-001	Label, Clothing and Equipment
D-83-001-005/SF-001	Fastener, Slide, Interlocking
D-80-001-028/SF-001	Cord, Plaited, Spun Synthetic Fibre
CFTPO - General	Canadian Forces Transportation Packaging Order

DRAWINGS

CS-149	Socket, Fastener
CS-150	Stud, Fastener
CS-151	Eyelet, Fastener
CS-153	Button, Fastener

2.3 Other publications. The following documents form part of this Manufacturing Data to the extent specified herein. Effective data must be that in effect on the date of manufacture.

American Society for Testing and Materials (ASTM)
ASTM International
P.O. Box C700
West Conshohocken, PA
19428-2959, USA
Telephone: (610) 832-9585
Email: service@astm.org

E809	Standard Practise for Measuring Photometric Characteristics of Retroreflectors
E810	Standard Test Method for Coefficient of Retroreflection of Retroreflective Sheeting Utilizing the Coplanar Geometry

General Services Administration (FED-STD)
Federal Supply Service
FSS Product Acquisition Center
Supply Standards Division (FLAS)
Arlington, VA
22202 USA

Telephone: 703-605-2567
Email: jennifer.moffat@gsa.gov
Download Documents: http://assist.daps.dla.mil/quicksearch/

A-A-55126B	Commercial Item Description - Fastener Tapes, Hook and Loop, Synthetic

Canadian General Standards Board (CGSB) Sales Unit
11 Laurier Street
Place du Portage, Phase III
Gatineau, Quebec K1A 1G6
Tel: (819) 956-0425
Alternate Tel: (800) 665-2472
Email: ncr.cgsb-ongc@pwgsc.gc.ca

CAN/CGSB-4.2-M	Textile Text Methods
CAN/CGSB-4.131-M	Cotton-Covered or Polyester-Covered, Polyester Thread
CAN/CGSB-54.1-M	Stitches and Seams, Part I and II
CAN/CGSB-86.1-2003	Care Labeling of Textiles

Commission Internationale de l'Eclairage (CIE)
The CIE Central Bureau
Kegelgasse 27, A-1030 Vienna/AUSTRIA
Tel.: +43 1 - 714 31 87 0
Fax: +43 1 - 714 31 87 18
E-mail: ciecb@ping.at

CIE 54.2	Retroreflection: Definition and Measurement

European Committee For Standardization
CEN Sales Point
ON - Austrian Standards Institute
Heinestraße 38
A-1021 Vienna
Fax: + 43 1 213 00 818
E-mail: www.on-norm.at

EN 471	Specification for High-Visibility Warning Clothing
EN 530	Abrasion Resistance of Protective Clothing Material - Test Methods

National Fire Protection Agency (NFPA)
1 Batterymarch Park
Quincy, Massachusetts
USA 02169-7471
Tel: (617) 770-3000

NFPA 1971 (2000 edition)	Standard on Protective Ensemble for Structural Fire Fighting

Standards Council of Canada (ISO)
270 Albert Street, Suite 200
Ottawa, ON
K1P 6N7
Telephone: (613) 238-3222
Email: **info@scc.ca**

ISO 6330	Textiles - Domestic Washing And Drying Procedures For Textile Testing (Method 2A)
ISO 7854	Rubber or Plastics-Coated Fabrics - Determination of Resistance to Damage by Flexing

2.4 DSSPM Documents. The following documents shall form part of the Technical Data Package for this item.

DSSPM 2-2-80-209 – **Annex D**	Specification for Static-Dissipative, Waterproof, Moisture Vapour Permeable (WMVP) Trilaminate Fabric
DSSPM 2-2-80-210 – **Annex E**	Specification for Cloth, Coated, Nylon/Polyurethane, 235 g/m²
DSSPM 2-2-80-500 – **Annex G**	Specification for CADPAT™ TW [Canadian Disruptive Pattern (Temperate Woodland)]
DSSPM 2-2-80-501 – **Annex H**	Specification for CADPAT™ (AR) [Canadian Disruptive Pattern (Arid)]

2.5 Figures. The following Figures form part of this Manufacturing Data. Figures are not to scale.

Figure 1	Front and Back Views – Type I and II Trousers
Figure 2	Details of Garment Components

Figure 3 Inside Views

Figure 4 Care And Marking Label

2.6 Sealed patterns.

DSSPM 108-04	Converged Trousers**,** Hot/Wet Weather / Windbreaker, Static-Dissipative (for construction and design)
DSSPM 259-01	Cloth, Twist, Nylon/Cotton, Lightweight, CADPAT ™ (TW) (for colours, motif size, colour distribution, print quality, penetration, clarity, & pattern)
DSSPM 253-02	Cloth, Twist, Nylon/Cotton, Lightweight, CADPAT™ (AR) (for colours, motif size, colour distribution, print quality, penetration, clarity & pattern)
DSSPM 259-04	Cloth, Nylon, Polyurethane Coated, 235 g/m^2 for construction and hand
DSSPM 281-01	Cloth, Twist, Cotton/Nylon, 170 g/m^2 , Canadian Average Green (for colour and IRR properties)

2.7 Pattern drawings. DND will provide the paper patterns for all sizes under Style Code **THWWAS13.** Size 7034 **(REG/MED)** will be used for tendering purposes.

2.8 Order of precedence.

2.8.1 In the event of inconsistency between contract documents, such as contract, technical data, and sealed patterns, the order of precedence must be contract, technical data, and sealed patterns.

2.8.2 In the event of a conflict between the text of this manufacturing data and the references cited herein, the text of this manufacturing data must take precedence.

2.8.3 In the event of inconsistency within this manufacturing data, the Contracting Authority must be contacted for clarification.

2.8.4 Nothing in this document supersedes applicable laws and regulations, unless a specific exemption has been obtained.

3 REQUIREMENTS

3.1 Sealed patterns. A sealed pattern, when available, will be supplied to the successful tenderer. The sealed pattern shall constitute the standard in regard to any properties not specified in the Manufacturing Data.

3.2 Design. The design must be in accordance with Sealed Pattern DSSPM 108-04, and must incorporate the following features:

a. Two pass-through pockets;
b. Elasticized waistband with front fly and slide fastener closure;
c. Retrievable reflector tape below the knee;
d. Nylon reinforcement patches at knee;
e. Gusseted leg with slide fastener closure;
f. Channel tab leg hem suppression with hook and loop closure; and
g. Four belt loops with snap fastener closures.

3.2.1 Unless otherwise specified, this garment must be governed by the Scale of Measurements (see Table I).

3.3 Preproduction. Preproduction samples must be completely representative of the final production garment, being made from parts and materials as specified and by equipment and processes, which will be used in quantity production.

3.4 Materials.

3.4.1 Shell. The material used as the shell must be static-dissipative, waterproof, moisture vapour permeable (WMVP) trilaminate fabric in accordance with DSSPM 2-2-80-209. The colour must be CADPAT™ Temperate Woodland in accordance with DSSPM 2-2-80-500 and Sealed Pattern DSSPM 259-01 for Type I Trousers. For Type II Trousers, the colour must be CADPAT™ Arid in accordance with DSSPM 2-2-80-501 and Sealed Pattern DSSPM 253-02.

3.4.2 Knee reinforcement patches. The material must be cloth, nylon, polyurethane coated, 235 g/m^2, textured high tenacity nylon in accordance with DSSPM 2-2-80-210 and Sealed Pattern DSSPM 259-04. The colour must be CADPAT™ Temperate Woodland (Type I of DSSPM 2-2-80-210) in accordance with DSSPM 2-2-80-500 and Sealed Pattern DSSPM 259-01 for Type I Trousers. For Type II Trousers, the colour must be CADPAT™ Arid (Type II of DSSPM 2-2-80-210) in accordance with DSSPM 2-2-80-501 and Sealed Pattern DSSPM 253-02.

3.4.3 Sealing tape. The sealing tape must be commercially available tape compatible with the anti-static waterproof moisture vapour permeable shell material (WMVP) shell material (see para 3.4.1). . The tape must be in accordance with DSSPM 2-2-80-209. The colour must be Canadian Average Green in accordance with Sealed Pattern DSSPM 281-01 for Type I Trousers. For Type II Trousers, the colour must be Light Sand as shown on Sealed Pattern DSSPM 253-02.

3.4.4 Hook and loop fastener tape. The tape must be 100% nylon, hook and loop fastener tape shall conform to Type II, Class 1 in accordance with A-A-55126B. This manufacturing data specifies the use of the following types of hook and loop fastener tapes:

- plain backed, 3/4 inch (18 mm) in width
- plain backed, 1 inch (25 mm) in width
- plain backed, 2 inches (50 mm) in width

When used in Type I Trousers, the colour must be Canadian Average Green in accordance with Sealed Pattern DSSPM 281-01. When used in Type II Trousers, the colour must be Light Sand as shown on Sealed Pattern DSSPM 253-02.

3.4.5 Slide fasteners. The slide fasteners used for the bottom leg suppressions must have monofilament (coil) members, automatic lock sliders and 100% polyester tape coated with a polyurethane (PU) coating not less than 2.5 mils thick in accordance with D-83-001-005/SF-001. When tested in accordance with the applicable test methods, all of the slide fasteners must meet the requirements for colourfastness and strength. These items are known to be available from YKK Canada Inc. (3939 boul. Thimens, Ville St-Laurent Quebec H4R 1X3) and has been known to meet these requirements. Any other commercial equivalents are acceptable provided it is a Design Authority-approved alternative slide fastener. The colour must be Canadian Average Green in accordance with Sealed Pattern DSSPM 281-01 for Type I Trousers. For Type II Trousers, the colour must be Light Sand as shown on Sealed Pattern DSSPM 253-02. The requirements for the slide fasteners are detailed in Table II:

Table II – Technical Requirements for Slide Fasteners

Application	Class	Type	Chain Type	Pull Type	Length
Front fly	3	13	Monofilament (Coil) without stops	Regular pull	see Scale of Measurements
Pass-through pockets	3	1	Monofilament (Coil) without stops	Regular pull	7-inches (17.8 cm)
Bottom leg suppressions	3	1	Monofilament (Coil) without stops	Regular pull	see Scale of Measurements

3.4.6 Reflector tape. The tape must be commercially available reflector tape, heavy backing, 1-inch (2.5 cm) wide conforming to Table III.

Table III – Technical Requirements for Reflector Tape

Description	Silver reflective trim bonded with a special polymer layer to a flame resistant, durable 100% cotton-cloth backing
Width	1-inch (2.5 cm)
Colour	daytime: silver reflected: white
Retroreflectivity (initial): EN 471	Class 2 (Table 5)
Coefficient of retroreflection (R_A, in cd/lux/m^2) measured by methods traceable to either: ASTM E809 & E810 (R_A) or CIE 54.2: 1982 (R')	entrance angle -4.0°, observation angle 0.2°: min. 330 entrance angle +5.0°, observation angle 0.33°: min 250
Abrasion ($R_A \geq 100$): EN 530 Method 2	5000 cycles
Washing ($R_A \geq 100$): 50 cycles by ISO 6330 Method 2A (60°C)	Pass

Wet Reflectivity ($R_A \geq 100$): EN 471 Annex A	Pass
Flame resistance: Federal Test Method Standard 191A, Method 5903.1:	4" char length, 2 seconds afterflame
Heat Resistance: NFPA 1971, 2000 Sections 5-1.6 and 6-6	Pass
Convective Heat: NFPA 1971, 2000 Sections 6-1.5, 6-6 and 6-46	Pass

Note: 3M™ Scotchlite™ Reflective Material 8935 Silver Industrial Wash Flame Resistant Fabric has been found to meet the requirements.

3.4.7 Herringbone twill tape. The tape must be commercially available 100% polyester woven edge twill tape, herringbone weave, 1-inch (2.5 cm) wide. The colour must be Canadian Average Green in accordance with Sealed Pattern DSSPM 281-01 or black for Type I Trousers. For Type II Trousers, the colour must be Light Sand as shown on Sealed Pattern DSSPM 253-02.

3.4.8 Drawcord. The drawcord for the waist must be cord, plaited, spun synthetic fiber conforming to Type I of D-80-001-028/SF-001. The colour must be Canadian Average Green in accordance with Sealed Pattern DSSPM 281-01 for Type I Trousers. For Type II Trousers, the colour must be Light Sand as shown on Sealed Pattern DSSPM 253-02.

3.4.9 Snap fasteners. The snap fasteners must be black finish with a phosphor bronze spring, conforming to Drawings CS-149-1 (Sockets), CS-150-1 (Studs), CS-151-1 (Eyelets), and CS-153-2 (Buttons). Six (6) sets of snap fasteners are required for each trouser.

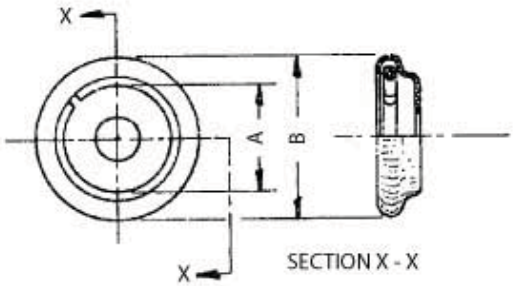

CS-149 – Socket Fastener

CS Part No	Inside diameter – Dim A	Outside diameter – Dim B
CS-149-1	11/32- inch (8.7 mm)	9/16- inch (14.3 mm)

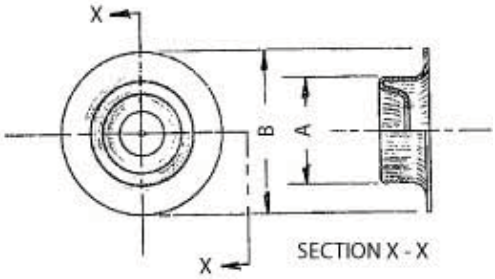

CS-150 – Stud Fastener

CS Part No	Diameter A	Flange diameter – Dim B
CS-150-1	3/8- inch (9.5 mm)	9/16- inch (14.3 mm)

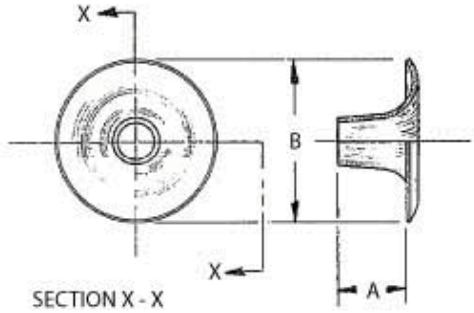

CS-151– Eyelet Fastener

CS Part No	Barrel Length Dim A	Flange Diameter Dim B
CS-151-1	¼- inch (6.3 mm)	9/16- inch (14.3 mm)

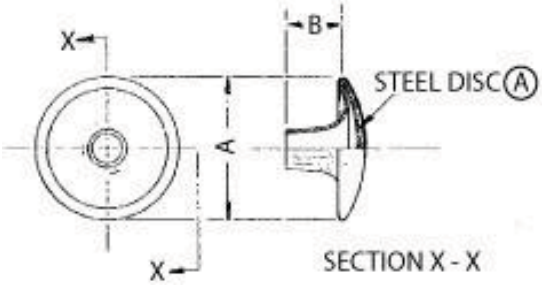

CS-153 – Button Fastener

CS Part No	Dim A		Dim B
	Ligne	Dia	Barrel Length
CS-153-2	24	39/64-inch (15.5 mm)	11/64- inch (4.4 mm)

3.4.10 Elastic for waistband and channel/tab assemblies. The elastic must be commercially available, preshrunk, knitted polyester/lycra with an elongation of 125% (tolerance ±5%). The colour must be black or white. When used for the waistband, the width must be 2-inch (5.0 cm). When used for the channel/tab assemblies, the width must be 1-inch (2.5 cm).

3.4.10.1 Thread. The thread for seaming, stitching, buttonholes and bartacks must be cotton-covered or polyester-covered, polyester thread (R50 Tex), conforming to CAN/CGSB-4.131-M. When material with the CADPAT™ TW (Temperate Woodland) design is being sewn, the colour must be Canadian Average Green in accordance with Sealed Pattern DSSPM 281-01. When material with the CADPAT™ AR (Arid Regions) design is being sewn, the colour must be Light Sand as shown on Sealed Pattern DSSPM 253-02. Unless otherwise specified, all other garment components must be matched for thread colour.

3.4.12 Label. Marking labels in accordance with D-80-001-055/SF-001 with care symbols in accordance with CAN/CGSB-86.1-2003 must be sewn to each pair of Trousers (see para 3.11). The colour must be Canadian Average Green in accordance with Sealed Pattern DSSPM 281-01 for Type I Trousers. For Type II Trousers, the colour must be Light Sand as shown on Sealed Pattern DSSPM 253-02.

3.5 Cutting.

3.5.1 Trousers must be cut using duplicates of Government supplied pattern drawings. Pattern drawings include seam allowance but do not include 'make-up' allowance. The contractor shall be responsible for any changes which may be required for 'make-up' allowance to suit his production methods, but the design, grade or the requirements specified herein must not be changed.

3.5.2 Shell parts of each pair of Trousers must be cut in the direction of the warp as shown on the pattern drawings.

3.5.3 The shell parts of each pair of Trousers must be cut from the same piece of shell material with the exception of the gusset pieces, channel and tab assemblies, leg facing pieces and belt loops which may be cut from separate lay or ends of shell material.

3.5.4 The specified materials must be cut and used in accordance with best commercial standards and practices.

3.6 Sewing.

3.6.1 All seams and stitchings must be in accordance with CAN/CGSB-54.1-M.

3.6.2 All stitching must be either lock stitched Type 301 or chain stitched 401 conforming to CAN/CGSB-54.1-M, having no less than 8 nor more than 10 stitches per inch (2.5 cm).

3.6.3 Seams. Seams must be a minimum of 3/8-inch (9.5 mm) wide or as otherwise specified.

3.6.4 The ends of all lockstitched seams and stitchings, also breaks in thread must be securely backstitched.

3.6.5 The stitches must present a regular even appearance without fabric pucker and must be free from skips that may result from faulty machine thread tension or other stitching malfunctions.

3.6.6 Where seaming, turning and stitching are specified, the edges must be properly worked out before stitching.

3.6.7 Hook and loop fastener tape. Hook and loop fastener tape must be stitched around all edges 1/8-inch (3.2 mm) gauge. Care must be taken to ensure stitching is formed into the hook and loop portion.

3.6.7.1 When tapes wider than 1-inch (2.5 cm) are used, they must be stitched around all edges and through the centre or have an 'X' in the box.

3.6.7.2 For best results, a 110 (#18) needle with round point should be used to stitch the tape.

3.6.8 Bartacks. Bartacks must be 1/2-inch (12.7 mm) long and must have not less than 20 cover stitches.

3.6.9 Buttonholes. Buttonholes must be gimp reinforced eyelet type, with not less than 22 stitches per inch (2.5 cm). The ends must be fishtailed or bartacked. Only the center of the buttonhole must be cut for the extrusion of the draw cord purposes, unless otherwise specified.

3.6.10 Snap fasteners. When snap fasteners are being inlaid, the contractor may add reinforcement under the shell material as required. Careful consideration must be given to the attaching force of the snap fastener machine to ensure that **all parts** of the snap fastener will remain attached and functional for the life of the garment.

3.6.11 Seam sealing. When seam sealing is specified, the application must ensure the integrity of the waterproof barrier layer in the garment in accordance with Manufacturing Data DSSPM 2-2-80-209. When sealed areas are examined visually, the following criteria must be met:

Table IV - Requirements For Seams, Ends and Joins, Drill Holes and Stitching Lines, and Seamed Areas

Construction Details	FAULTS WHICH ARE NOT ACCEPTABLE
Seams	1. Tape which is not centered across the width of the seam; 2. Delamination along edges of tape, over seam allowance and stitching or across the width of the tape; 3. Bubbling; 4. Blistering; 5. Puckering; 6. Melting; and/or 7. Ends of threads which have not been trimmed.
Ends and joins	1. Loose ends and corners which have not bonded; 2. Rough edges or beads at the ends; and 3. An overlap at a join of less than 3/4-inch (19.1 mm).

Construction Details	FAULTS WHICH ARE NOT ACCEPTABLE
Drill holes and stitching lines not in seams	1. Left uncovered without a designated exception.
Stiffness of seamed area	1. Marked increase of stiffness.

3.7 Construction

3.7.1 Seat seam. The trousers must be joined together at the seat, turned and topstitched at 1/16-inch (1.6 mm) gauge. The seam must be sealed.

3.7.2 Side seams. The front and back must be seamed together along the side. The seam must be turned towards the back and sealed.

3.7.3 Fronts. Each front must have a slanted pass-through pocket with slide fastener.

3.7.3.1 Pass-through pockets. With the slide fastener on the inner side of the shell, the stopper at the top and the raw edges of the pass-through openings folded under, the slide fastener must be stitched around all edges at 1/16-inch (1.6 mm) and 1/4-inch (6.4 mm) gauge. Secure the top and bottom of the slide fastener tape with lockstitch backstitched three or four times.

3.7.4 Leg facing pieces. The left and right leg facing pieces must be made of one layer of shell material. The exterior face of the leg facing pieces must be the nylon or polyester tricot lining fabric with the anti-static fibres (inside face of fabric). The leg facing pieces must be pre-assembled with the reflector tape assemblies attached.

3.7.4.1 Front leg reflector tape assemblies (see Figure 3). One piece of reflector tape measuring 8-inches (20.4 cm) long by 1-inch (2.5 cm) wide must be stitched to an equal length of loop fastener tape and two pieces of herringbone twill tape measuring 3-inches (7.5 cm) long by 1-inch (2.5 cm) wide. The reflector tape must overlap the herringbone twill tape by 1/4-inch (6.4 mm) and must have both ends aligned with twill tape end. The reflector tape and the loop fastener tape must be stitched together at 1/6-inch (1.6 mm) gauge. The upper thread must be silver grey and bottom thread must match the underside of the shell material.

3.7.4.2 The front of the reflector tape assembly must be placed face down with the bottom aligned to the finished edge of the leg facing and the twill tape towards the leg facing bottom edge. Twill tape must be stitched at 1/8-inch (3.2 mm) gauge along the bottom edge of the twill tape ensuring that the reflector tape assembly is positioned so that the hem of the leg facing does not overlap the top of the reflector tape when assembly is in use.

3.7.4.3 Fold back for reflector tape. One piece of hook fastener tape measuring 8-inches (20.4 cm) long by 1-inch (2.5 cm) wide must be positioned on the leg facing fabric as indicated on the paper patterns. It must be stitched all around the edges.

3.7.4.4 Leg facing closure. A piece of loop fastener tape measuring 1-inch (2.5 cm) long by 3/4-inch (19.1 mm) wide must be positioned on the leg facing fabric as indicated on the paper patterns. It must be stitched all around the edges.

3.7.4.5 Another reflector tape assembly (for the back of the legs) must be positioned on the leg facing fabric as shown on the paper patterns.

3.7.5 Knee reinforcement patches. A nylon reinforcement patches must be sewn to the fronts with the bottom flush to the top leg portion bottom seam, as indicated on the paper patterns, and stitched 1/16-inch (1.6 mm) and 1/4-inch (6.4 mm) gauge or double-needle stitched. This stitching must be sealed on the underside of the shell fabric. The bottom hem of the top leg portion and the knee reinforcement patch must be turned up 3/8-inch (9.5 mm) and seamed 1/8-inch (3.2 mm) gauge with a stay stitch to secure patch for ease of sewing.

3.7.6 Bottom leg portion. Each bottom leg portion must have leg suppression system consisting of a slide fastener, a gusset, and a leg zipper cover or slide fastener placket.

3.7.6.1 Leg gusset. Each leg gusset must be made of one layer of shell material. The leg gusset must be sewn at 1/4-inch (6.4 mm) gauge to the bottom leg portion. This seam must be sealed.

3.7.6.2 Slide fastener placket. The placket must be folded in half, right sides together, seamed along the side edges, and turned inside out. The slide fastener tape must be sewn to the left and right edges of the slide fastener plackets at 3/8-inch (9.5 mm) gauge. The slide fastener must be inverted so that the opening is at the hem.

3.7.6.3 The front and back of the bottom leg must be seamed together along the side seams. The slide fastener placket must be sewn to the bottom leg at 1/16-inch (1.6 mm) and 1/4-inch (6.4 mm) gauge or double-needle stitched along the outer edges. There must be a row of stitching through the placket to secure the top of the slide fastener. These seams must be sealed.

3.7.7 Joining leg facing, top and bottom leg portions. With raw edges together, the leg facing, top and bottom leg portions must be seamed at 1/4-inch (6.4 mm) gauge through all plies. This seam must be sealed.

3.7.7.1 With right sides of the fabric together, the lower edge of the leg facing must be stitched lower edge of the top leg shell at 1/8-inch (3.2 mm) gauge all around.

3.7.8 Waistband. The waistband must consist of an elasticized waistband and two waistband extension pieces.

3.7.8.1 Two buttonholes (for the drawcord ends) must be placed on the inside on the elasticized waistband piece as indicated on the pattern piece. The buttonholes must be reinforced with a layer of shell.

3.7.8.2 The elasticized waistband must be constructed on an automatic elasticized waistband machine with the needles set apart at 1/2-inch (12.7 mm) creating four channels. The drawcord must be inserted into the second channel from the top and protrude from each buttonhole for 5-inches (12.7 cm). The ends of the drawcord must be sealed and tied in a knot to prevent unraveling.

3.7.8.3 Waistband extensions. The waistband extensions must be made of one layer of shell material. The extension must have the raw edge folded 1/4-inch (3.2 mm) and stitched at 1/8-inch (3.2 mm) gauge to each end of the elasticized waistband.

3.7.8.4 The bottom edge of the elasticized waistband must be seamed to the trousers. The marking and care labels must be caught in the seam and positioned on the inner centre back (see para. 3.11). The seam must be turned towards the trouser and stitched at 1/16-inch (1.6 mm) gauge. The finished width of the waistband must be 2-1/4 inches (5.7 cm).

3.7.9 Fly. The fly must consist of a two-way water resistant slide fastener, under zipper shell piece, fly curtain, and two snap fasteners for the closure.

3.7.9.1 Left side. The left half of the slide fastener (polyurethane coat side facing inside) must be positioned as indicated on the paper patterns and sewn 1/4-inch (6.4 mm) gauge to the back side of the under zipper fly shell piece.

3.7.9.2 Fly curtain. The fly curtain plies must be seamed together across the top and along the front edge, turned and stitched 1/8-inch (3.2 mm) gauge.

3.7.9.3 The raw edge of the waistband extension must be folded 1/4-inch (6.4 mm), and along with the right half of the slide fastener and the back edge of the curtain, must be seamed, turned and stitched 1/16-inch (1.6 mm) gauge to the right fly opening. The end of the slide fastener tape must be included in the stitching. This seam must be sealed.

3.7.9.4 Left side. The right edge of the under zipper fly shell piece must be folded 1/4-inch (6.4 mm) and sewn at 1/8-inch gauge to the front. The right edge of the under zipper fly shell piece must be sewn to the front at 1/8-inch (3.2 mm) gauge following the curve of the pattern piece at the bottom. A bartack must be placed across the bottom of the fly opening. This seam must be sealed.

3.7.9.5 The remaining edges of the left waistband extension must be folded 1/4-inch (6.4 mm) and sewn to the front at 1/8-inch (3.2 mm) gauge. The end of the slide fastener tape included in the seam.

3.7.10 Joining the crotch. The fronts must be joined at the crotch below the fly opening. The seam allowance must be pressed towards the left side and stitched to the bottom portion of the fly curtain 1/16-inch (1.6 mm) gauge and 1/4-inch (6.4 mm) gauge or double-needle stitched from the original seam. These seams must be sealed.

3.7.11 Belt loops with snap fastener closure. Four belt loops must be made of shell material. The finished width must be approximately 5/8-inch (15.8 mm) wide.

3.7.11.1 One end of each belt loop must be folded under 1-inch (2.5 cm) and stitched across the end. A female snap fastener must be centred and inlaid on the outside of the fold.

3.7.11.2 The belt loops must be sewn on after the waistband has been completed and must be positioned as shown on pattern drawings and on Figure 1. The top of the belt loops must be bartacked.

3.7.11.3 Four male snap fasteners must be inlaid on the trouser, effecting proper closure with the belt loops. The finished effective length of the loops must be 4 inches (10.2 cm). The area in which the snap fasteners are inlaid must be sealed beforehand.

3.7.12 Inseams. The front and back must be joined along the inseams. The seam must be turned towards the back and sealed.

3.7.13 Leg bottom. The bottom of each leg must be turned up, the raw edge folded under and stitched at 1/8-inch (3.2 mm) gauge to form a finished hem of 1-inch (2.5 cm) wide.

3.7.14 Channel and tab assemblies (2). The channel and the tab must each be made of one layer of shell material.

3.7.14.1 A piece of hook fastener tape measuring 3-1/2 inches (8.9 cm) long by 3/4-inch (19.1 mm) wide must be positioned on the tab, as shown on the paper patterns, and stitched around all edges.

3.7.14.2 The tab must be folded in half, right sides together, seamed along the side edges, turned inside out and stitched at 1/16-inch (1.6 mm) gauge along the side edges leaving one end open for the insertion of the elastic. A piece of elastic tape measuring 3-3/4 inches (9.5 cm) in length must be inserted in the open end of the tab and must be double stitched 1/8-inch (3.2 mm) from the edge.

3.7.14.3 One edge of the channel must be turned under 2 inches (5.0 cm) and seamed at 1/8-inch (3.2 mm) gauge. At the other end, the edge of the fabric is folded 3/8-inch (9.5 mm), the raw edge of the elastic is centered and encased, and the end is stitched 1/4-inch (6.4 mm) from the edge. With the end of the tab must extending from the edge of the channel, the channel must be stitched around the three sides at 1/8-inch (3.2 mm) gauge to the front side bottom hem of the each trouser leg.

3.7.14.4 A piece of loop fastener tape measuring 6-3/8 inches (16.2 cm) long by 3/4-inch (19.1 mm) wide must be stitched around all edges to the back side bottom hem of each trouser leg.

3.7.15 Leg facing closure. Two pieces of hook fastener tape measuring 1-inch (2.5 cm) long by 3/4-inch (19.1 mm) width must be positioned on the bottom front and back leg shell to enable secure closure of the facing.

3.7.16 Snap fasteners for the waist closure. Two male snap fasteners and two female snap fasteners must be inlaid on the fly curtain and facing of the trousers, effecting proper closure at the waist.

3.8 Measurements. Measurements must be as shown on the Scale of Measurements (see Table I) and the appropriate Figures.

3.9 Seam sealing.

3.9.1 The seam sealing equipment must be controlled and calibrated in accordance with the quality system requirement, to ensure process conformance. Time, pressure and heat must be

verified periodically throughout the seam sealing operation and each time the equipment is started up.

3.9.2 A hydrostatic test using 3-1/2 p.s.i. for 3 minutes must be conducted on straight seams, curved seams and joint seams after every two hours of continuous operation. Tests must also be conducted after every 10 minutes of down time. There must be no leakage.

3.9.3 All seam sealing test results and verification must be recorded and documented as per the quality system requirements.

3.10 Pressing. The Trousers must be properly pressed in accordance with good commercial practice.

3.11 Marking and Care Label. Two (2) labels must be sewn side by side on the inner Trouser back; one in English and the other in French. The labels must be caught in the waistband seam only. The labels and markings must be in accordance with D-80-001-055/SF-001. Care symbols in accordance with CAN/CGSB-86.1-2003 must be included on the label. The marking must give the following information printed in characters not less than 1/8-inch (3.2 mm) nor more than 1/4-inch (6.4 mm) in height, with exception of the size which must be twice the size of the other characters. An example of the label is illustrated in Figure 4.

a. The abbreviated nomenclature:
   TROUSERS, WET WEATHER, CONVERGED
   PANTALONS IMPERMEABLE, CONVERGE
b. NATO Stock Number (NSN) for each size (numbers will be designated in the contract);
c. Size by height and chest (see Table I - Scale of Measurements);
d. NATO size (see Table I - Scale of Measurements);
e. Contract number;
f. If applicable, the name of the sub contractor must be identified on the label as initial(s) after the contract number;
g. For the name of the prime contractor, the must be no initials, logos, or trademarks;
h. Month and year of manufacture;
i. Care symbols (in accordance with CAN/CGSB-86.1-2003); and
j. Static Dissipative Garment Instructions

3.12 Finishing. The Trousers must be cleaned, smoothed and folded. Garments must be individually packaged in accordance with CFTPO-General. The nomenclature for the label on the bags should read:

For Type I	Converged Trousers, Hot/Wet Weather, Windbreaker, Static-Dissipative, CADPAT™ Temperate Woodland (TW);/ Pantalons convergents pour temps chaud ou pluvieux, coupe-vent, antistatique, DCAMC^{MC} RBT (régions boisées tempérées)
For Type II	Converged Trousers, Hot/Wet Weather, Windbreaker, Static-Dissipative, CADPAT™Arid Regions (AR);/ Pantalons convergents pour temps chaud ou pluvieux, coupe-vent, antistatique, DCAMC^{MC} RA (régions arides)

4 QUALITY CONTROL/INSPECTION

4.1 The contractor is responsible for the performance of all inspection requirements as specified herein. Contractors may utilize their own or any other inspection facility acceptable to the Government or its designated representative. The Government reserves the right to perform any of the inspections specified herein, where such inspections are deemed necessary to ensure materiel and services conform to the prescribed requirements. The contractor is responsible for ensuring that all materiel or services submitted to the government for acceptance comply with all requirements of the contract

5. PACKAGING

5.1 Packaging and packing. The packaging, packing and delivery must be in accordance with the terms of the contract.

6. NOTES

6.1 Ordering data. Procurement documents should specify the following:

a. Title and date of manufacturing data;
b. NATO stock number and size required;
c. Preproduction requirements (see 3.3);
d. Packaging and packing requirements (see 5.1);
e. The Design Authority; and
f. The Quality Assurance Authority.

6.2 Definition of terms.

6.2.1 Design Authority. The Design Authority is the Government agency responsible for the technical aspects and changes to the design. Unless otherwise specified in the contract, the Design Authority is the Director, Soldier Systems Program Management (DSSPM).

6.2.2 Master sealed pattern. A master sealed pattern is the authorized prototype of the item to be produced, and is held only by the Government.

6.2.3 Sealed pattern. A sealed pattern is an exact duplicate of the master sealed pattern and is available to the manufacturer to be used as guide in production.

6.3 DND green procurement. The production of a product to this manufacturing data, or the evaluation of a product to this manufacturing data, may require the use of materials and/or equipment that could be hazardous. This manufacturing data does not purport to address all safety, health and environmental concerns, if any associated with its use. It is the responsibility of the user of this manufacturing data to establish appropriate safety, health and environmental practices and to determine the applicability of regulatory limitations prior to use.

6.4 Enquiries. Enquiries or recommendations for additions or deletions must be addressed to the Contracting Authority.

TABLE V - Converged Trousers, Hot/Wet Weather, Windbreaker, Static-Dissipative, CADPAT™ Temperate Woodland (TW)

SIZE	NSN
A/A	**8415-20-001-7213**
6426	8415-20-001-7214
6430	8415-20-001-7216
6434	8415-20-001-7217
6730	8415-20-001-7218
6734	8415-20-001-7220
6738	8415-20-001-7221
6742	8415-20-001-7222
7030	8415-20-001-7240
7034	8415-20-001-7241
7038	8415-20-001-7242
7042	8415-20-001-7243
7046	8415-20-001-7244
7330	8415-20-001-7245
7334	8415-20-001-7246
7338	8415-20-001-7247
7342	8415-20-001-7248
7346	8415-20-001-7249
7634	8415-20-001-7250
7638	8415-20-001-7251
7642	8415-20-001-7252
7646	8415-20-001-7253
SPECIAL	8415-20-001-8904

TABLE VI - Converged Trousers, Hot/Wet Weather, Windbreaker, Static-Dissipative, CADPAT™ Temperate Woodland (AR)

SIZE	NSN
A/A	**8415-20-000-6538**
6426	8415-20-000-6539
6430	8415-20-000-6540
6434	8415-20-001-7296
6730	8415-20-000-6599
6734	8415-20-000-6600
6738	8415-20-000-6602
6742	8415-20-001-7332
7030	8415-20-000-6606
7034	8415-20-000-6608
7038	8415-20-000-6610
7042	8415-20-000-6611
7046	8415-20-000-6612

SIZE	NSN
7330	8415-20-000-6620
7334	8415-20-000-6621
7338	8415-20-000-6623
7342	8415-20-000-6707
7346	8415-20-000-6715
7634	8415-20-000-6716
7638	8415-20-000-6717
7642	8415-20-000-6719
7646	8415-20-000-6720
SPECIAL	8415-20-002-0079

TABLE I - SCALE OF MEASUREMENTS FOR CONVERGED TROUSERS, HOT/WET WEATHER, WINDBREAKER, STATIC-DISSIPATIVE, CADPAT

OCT 2006
SEPT 2005

MEASUREMENTS OF BODY					MEASUREMENTS OF GARMENT									
SIZES BY HEIGHT AND WAIST	HEIGHT WITHOUT SHOES		WAIST	NATO SIZES	WAIST FULLY EXTENDED	WAIST RELAXED	SEAT 10" DOWN FROM TOP OF WAISTBAND	OUTSEAM FINISHED	INSEAM FINISHED	WIDTH AT BOTTOM OF KNEE EX-TENSION	WIDTH AT BOTTOM OPEN	WIDTH AT BOTTOM CLOSED	SLIDE FASTENER LENGTH AT BOTTOM OF LEG	SLIDE FASTENER LENGTH AT FRONT FLY
6426	5' 1" to 5' 3-1/2"	X-SHORT	23 - 26	7075-6070	34	24	42	37	26 1/2	20	26	20	12	6
6430			27 - 30	7075-7080	38	28	46			21	26 1/2	20 1/2		
6434			31-34	7075-8090	42	32	50			22	27	21		
6730	5'4" to 5' 6 1/2"	SHORT	27-30	7580-7080	38	28	46	40	28 1/2	21	26 1/2	20 1/2	13	7
6734			31-34	7580-8090	42	32	50			22	27	21		
6738			35-38	7580-9000	46	36	54			23	27 1/2	21 1/2		
6742			39-42	7580-0010	50	40	58			24	28	22		
7030	5'7" to 5'9 1/2"	REG.	27-30	8085-7080	38	28	46	43	30 1/2	21	26 1/2	20 1/2	14	8
7034			31-34	8085-8090	42	32	50			22	27	21		
7038			35-38	8085-9000	46	36	54			23	27 1/2	21 1/2		
7042			39-42	8085-0010	50	40	58			24	28	22		
7046			43-46	8085-1020	54	44	62			25	28 1/2	22 1/2		
7330	5'10" to 6'1/2"	TALL	27-30	8590-7080	38	28	46	46	32 1/2	21	26 1/2	20 1/2	15	9
7334			31-34	8590-8090	42	32	50			22	27	21		
7338			35-38	8590-9000	46	36	54			23	27 1/2	21 1/2		
7342			39-42	8590-0010	50	40	58			24	28	22		
7346			43-46	8590-1020	54	44	62			25	28 1/2	22 1/2		
7634	6'1" to 6'3 1/2"	X-TALL	31-34	9095-8090	42	32	50	49	34 1/2	22	27	21	16	9 1/2
7638			35-38	9095-9000	46	36	54			23	27 1/2	21 1/2		
7642			39-42	9095-0010	50	40	58			24	28	22		
7646			43-46	9095-1020	54	44	62			25	28 1/2	22 1/2		
TOLERANCE PLUS OR MINUS					1/2	3/4	3/4	3/4	1/2	1/2	1/2	1/2	0	0

DIMENSIONS ARE IN INCHES

THWWAS13

FIGURE 1 - FRONT AND BACK VIEWS - TYPE I AND II TROUSERS

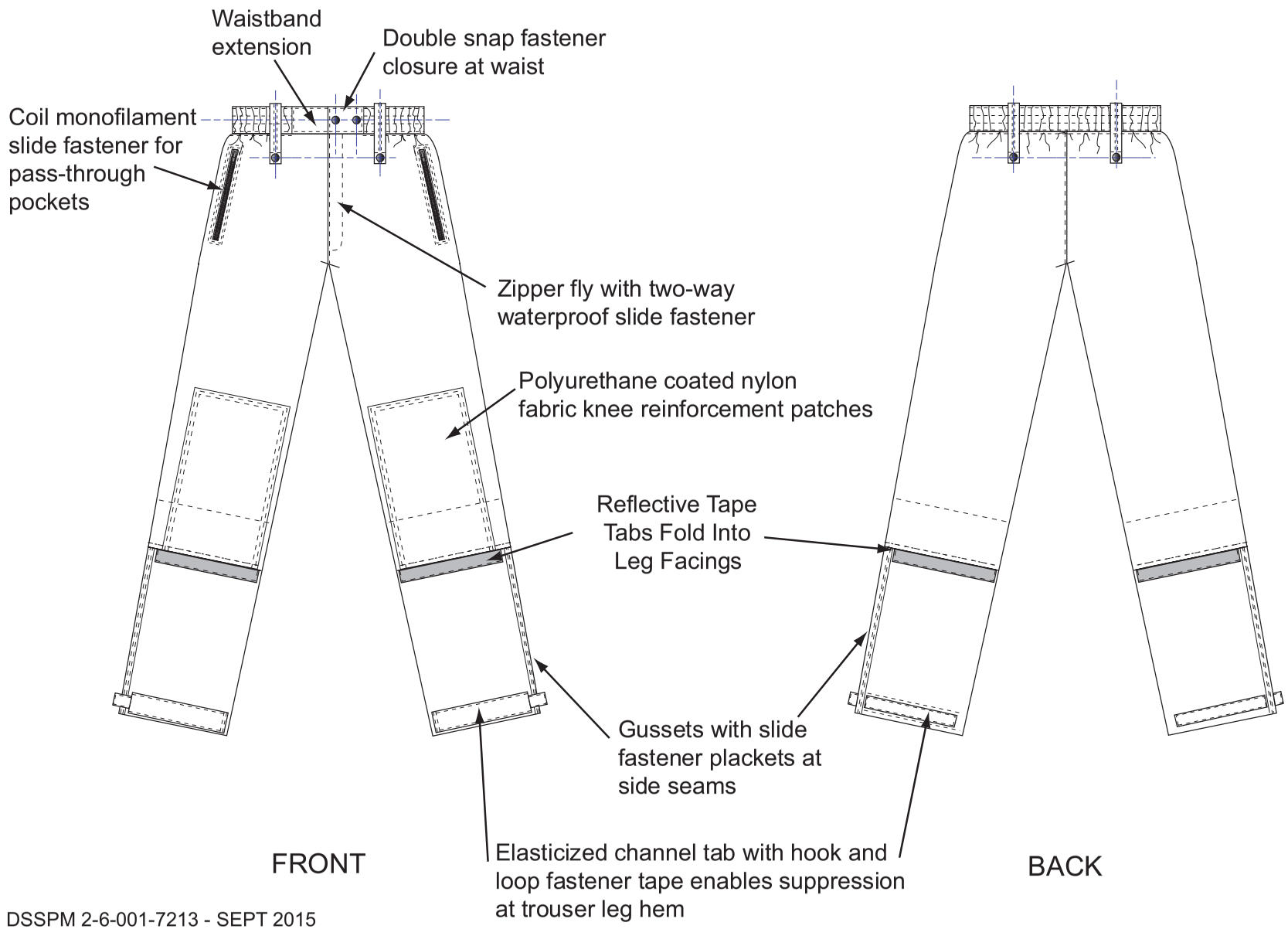

DSSPM 2-6-001-7213 - SEPT 2015

FIGURE 2 - DETAILS OF GARMENT COMPONENTS

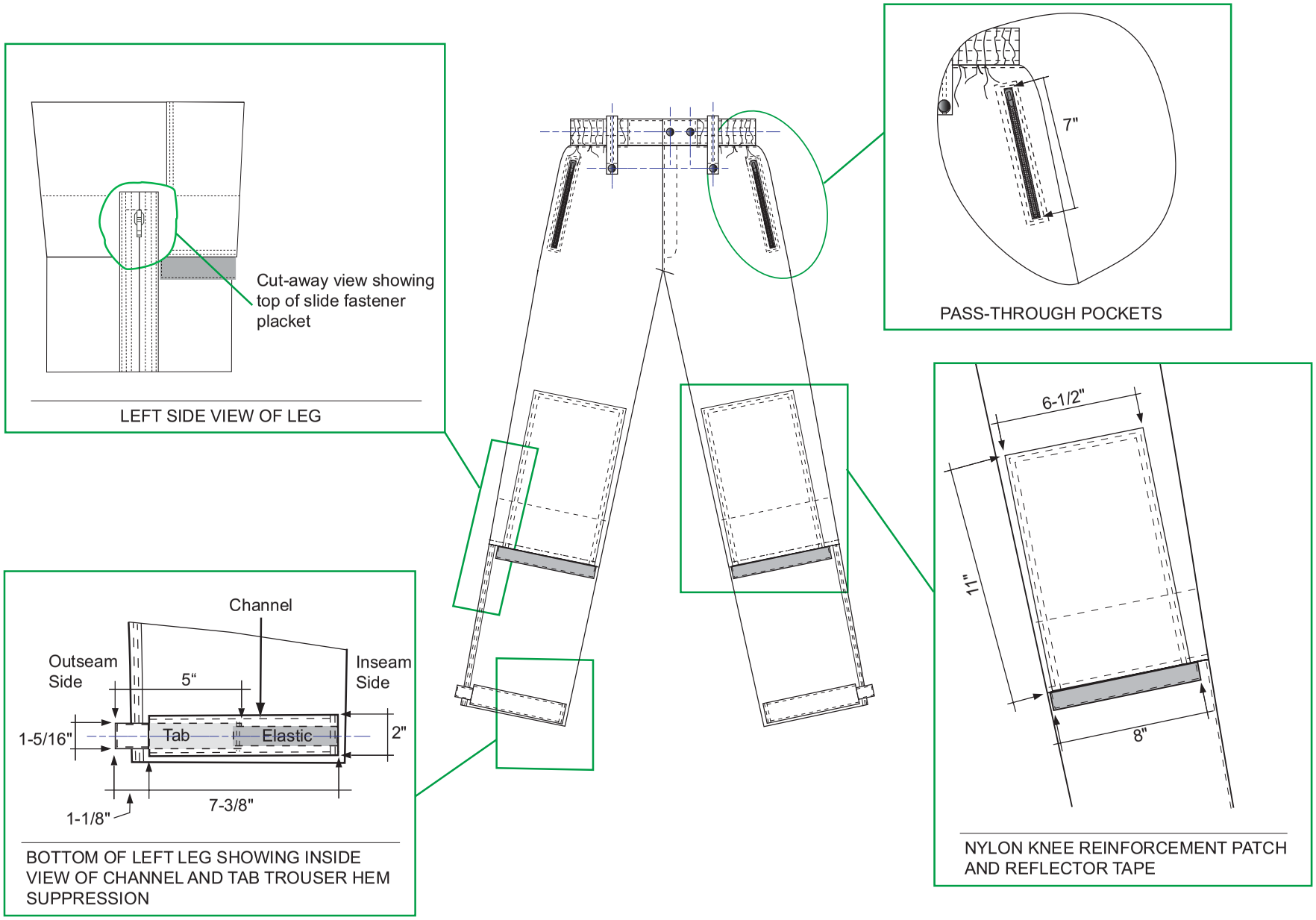

DSSPM 2-6-001-7213 - SEPT 2015

FIGURE 3 - INSIDE VIEWS

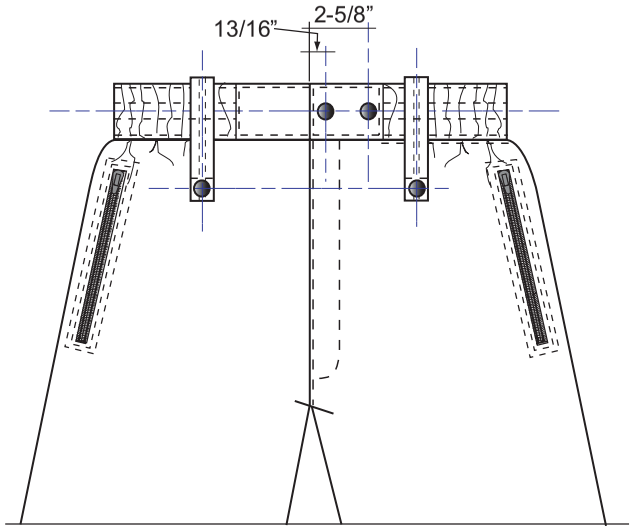

FRONT VIEW OF WAIST

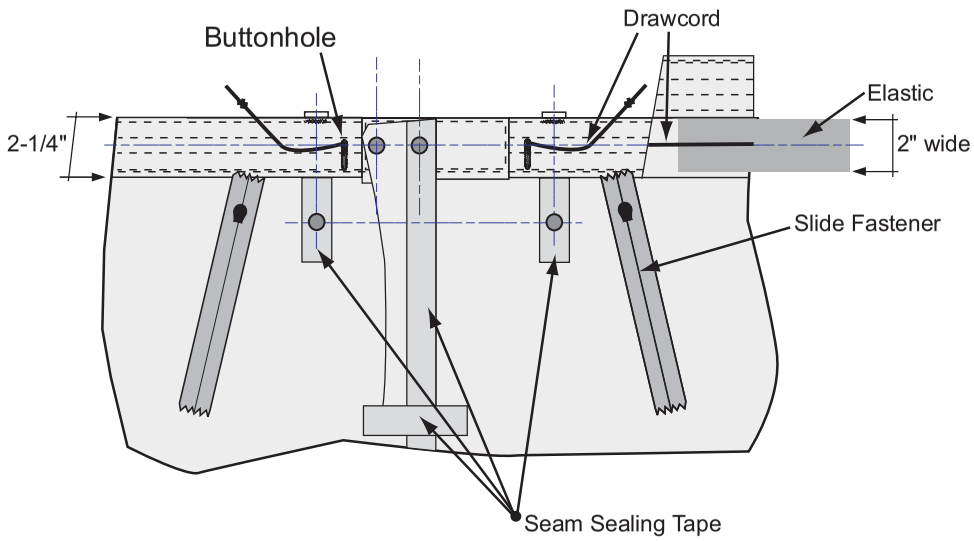

INSIDE FRONT VIEW OF WAIST

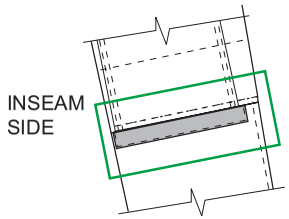

RIGHT LEG

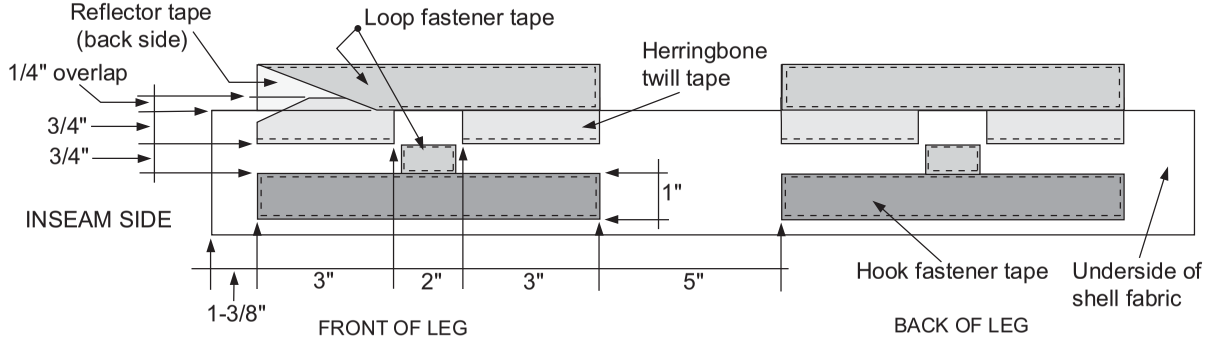

UNDERSIDE OF RIGHT LEG FACING PIECE SHOWING REFLECTOR TAPE ASSEMBLY DETAILS

FIGURE 4 - CARE AND MARKING LABELS

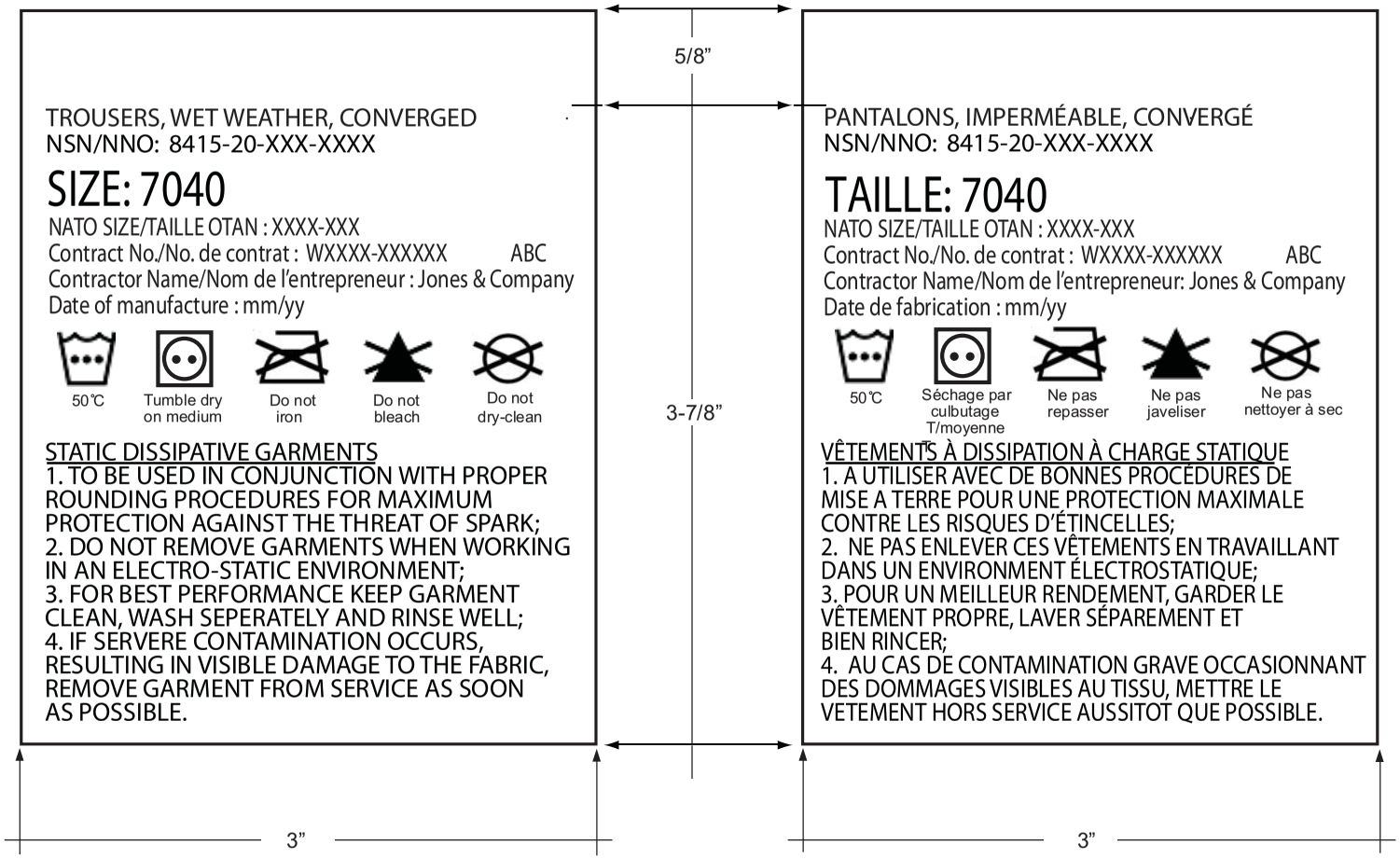

SPECIFICATION FOR CLOTH, NYLON, TRILAMINATE, 185 G/M^2 STATIC-DISSIPATIVE, WATERPROOF, MOISTURE VAPOUR PERMEABLE (WMVP)

SPÉCIFICATION TISSU DE NYLON ANTISTATIQUE, TRIPLE ÉPAISSEUR, 185 g/m² IMPERMÉABLE À L'EAU ET PERMÉABLE À LA TRANSPIRATION (IEPT)

1. SCOPE

1.1 Scope: This specification in its entirety describes the technical requirements for trilaminate, static-dissipative, waterproof, moisture vapour permeable (WMVP) fabrics intended for use as rainwear/windbreakers.

1.2 Description: The fabric described in this specification was developed to meet the specific requirements defined by the Air Force for a specific end-use. The jacket and trousers that comprise the Hot/Wet Weather/Windbreaker Static-Dissipative garment system were initially designed for wear by personnel servicing aircraft in wet and/or windy weather conditions at temperatures ranging from +5° to +20°C. The garments might be worn in a variety of weather conditions in Canada and in foreign operations. Sufficient wind resistance and protection from ingress of water is essential for wearers when standing still, moving about on feet, knees, or lying down, leaning, sitting, etc. against wet surfaces. A high degree of moisture vapour permeability is required to provide maximum physiological comfort together with waterproofness and wind resistance.

1.3 The information contained herein is Copyright to Her Majesty the Queen of Canada, as is its associated pattern. The term CADPAT™, with and without

1. PORTÉE

1.1 Portée. La présente spécification vise les tissus antistatiques triple épaisseur, imperméables à l'eau et perméables à la transpiration antistatique (IEPT) servant à la confection de vêtements de pluie et de coupe-vent.

1.2 Description. Le tissu décrit dans la présente spécification respecte les exigences d'utilisation fixées par la Force aérienne. La veste et le pantalon faisant partie du système de vêtement antistatique coupe-vent pour temps chaud ou humide ont été d'abord conçus pour le personnel d'entretien des aéronefs appelés à travailler à des températures de + 5° à + 20° C, lorsqu'il pleut ou qu'il vente. Ils peuvent être portés selon diverses conditions météorologiques, au Canada et à l'étranger. Une résistance suffisante au vent et une bonne protection contre l'infiltration d'eau sont essentielles pour le porteur lorsqu'il se tient debout, marche ou se déplace sur les genoux ou lorsqu'il est en position couchée, se penche, s'assoit, etc. contre des surfaces mouillées. Une excellente perméabilité à la transpiration est nécessaire pour offrir un confort physiologique maximum, tout comme l'imperméabilité et la résistance au vent.

1.3 L'information contenue dans le présent document, ainsi que le modèle associé, sont la propriété de Sa Majesté la Reine du Canada et protégés par droit

extensions, is a registered Trademark belonging to the Department of National Defence. Any of the data contained in this specification, and its associated pattern, may be used only for goods for Canada. The printed textile and any items made therefrom shall be for the sole end use of DND. There shall be no selling or offering for sale of goods incorporating the CADPAT™ pattern and colours to any person or entity other than Canada without the Minister's prior written authorization. Explicit in this is that any goods of not first quality produced shall not be released, sold, or offered for sale, directly or indirectly, to any person or corporation other than Canada without the Minister's prior written authorization.

1.3.1 The information, data, know-how, formulas, algorithms, software, processes, systems, methods, designs, text, works, figures, tables, sketches, photographs, plans, drawings, specifications, samples, reports, names, inventions and/or ideas contained herein (hereinafter "Intellectual Property") is the exclusive property of Her Majesty the Queen in Right of Canada as represented by the Minister of National Defence (hereinafter referred as "DND"). No one has the right to reproduce, disclose, disseminate, or utilize, in any manner or in any form, this Intellectual Property, or any part thereof, without the prior written consent of DND. For further information on the restrictions applicable to this Intellectual Property, or to request consent from DND, please contact the Design Authority, Director Soldier Systems Programme Management, or the Director of Intellectual Property, Department of National Defence, 101 Colonel By Dr., Ottawa, K1A 0K2, Canada.

1.4 Classification. The fabric shall be classified as follows:

Type I	Cloth, Nylon, Trilaminate, 185 g/m^2, Static-Dissipative, Waterproof, Moisture Vapour Permeable (WMVP), CADPAT™ (TW) NSN: 8305-21-921-2917
Type II	Cloth, Nylon, Trilaminate, 185 g/m^2, Static-Dissipative, Waterproof, Moisture Vapour Permeable (WMVP), CADPAT™ (AR) NSN: 8305-20-003-5352

d'auteur. Le terme DCamC^{MC}, avec ou sans extension, est une marque déposée, propriété du ministère de la Défense nationale. Les données contenues dans la présente spécification et le modèle associé ne peuvent être utilisés que pour des marchandises produites pour le Canada. Les tissus imprimés et tous les articles fabriqués dans ce tissu sont à l'usage final exclusif du MDN. Nul bien incorporant le motif et les couleurs du DCamC^{MC} ne peut être vendu ni offert à toute personne ou entité autre que le Canada sans l'autorisation préalable écrite du ministre. De façon explicite, tout bien qui n'est pas de première qualité ne peut être distribué, vendu ou offert en vente, directement ou indirectement, à toute personne physique ou morale autre que le Canada sans l'autorisation préalable écrite du ministre.

1.3.1 Les informations, données, formules, algorithmes, logiciels, processus, systèmes, méthodes, dessins, ouvrages, figures, tableaux, croquis, photos, plans, dessins, spécifications, échantillons, rapports, noms, inventions ou idées, de même que le libellé ou le savoir-faire figurant aux présentes (ci-après désignés sous le nom collectif « propriété intellectuelle ») sont la propriété exclusive de Sa Majesté la Reine du Chef du Canada, représentée par le ministre de la Défense nationale (ci-après le « MDN »). Nul n'a le droit de reproduire, divulguer, diffuser ou utiliser, de quelque manière ou sous quelque forme que ce soit, cette propriété intellectuelle, en tout ou en partie, sans le consentement écrit préalable du MDN. Pour de plus amples informations sur les restrictions applicables à cette propriété intellectuelle, ou pour demander le consentement du MDN, veuillez contacter l'autorité responsable de la conception, Directeur. Administration du programme de l'équipement du soldat, ou le Directeur. Propriété intellectuelle, ministère de la Défense nationale, 101, promenade Colonel By, Ottawa, K1A 0K2, Canada.

1.4 Classification. Les tissus doivent être classés comme suit :

Type I	Tissu de nylon antistatique triple épaisseur, 185 g/m^2 imperméable à l'eau et perméable à la transpiration (IEPT), DCamC^{MC} (RBT) NNO : 8305-21-921-2917
Type II	Tissu de nylon antistatique triple épaisseur, 185 g/m^2, imperméable à l'eau et perméable à la transpiration (IEPT), DCamC^{MC} (RA) NNO : 8305-20-003-5352

Type III	Cloth, Nylon, Trilaminate, 185 g/m^2, Static-Dissipative, Waterproof, Moisture Vapour Permeable (WMVP), International Orange NSN: 8305-20-003-5353
Type IV	Cloth, Nylon, Trilaminate, 185 g/m^2, Static-Dissipative, Waterproof, Moisture Vapour Permeable (WMVP), Red

2. APPLICABLE DOCUMENTS

2.1 Government Documents. The following publications form part of this specification to the extent specified herein. The effective dates shall be those in effect on the date of the invitation to tender. Copies of this specification may be obtained from the Department of National Defence, Ottawa, Ontario, Canada, K1A 0K2, Attention: DSSPM 2-2.

DSSPM 2-2-80-500: Specification for CADPAT™ (TW) [Canadian Disruptive Pattern (Temperate Woodland)]

DSSPM 2-2-80-501: Specification for CADPAT™ (AR) [Canadian Disruptive Pattern (Arid)]

2.2 Other Publications. The following documents form part of this specification to the extent specified herein. The effective date of the documents shall be those in effect on the date of the publication of this specification. Source is shown.

AATCC Technical Manual
P.O. Box 12215,
Research Triangle Park, North Carolina 27709, USA
Tel: 919-549-3526
Internet: http://www.aatcc.org/

ASTM International
P.O.Box C700
West Conshohocken, PA 19428-2959, USA
Tel: 610-832-9585
Email: service@astm.org
Internet: http://www.astm.org/

Type III	Tissu de nylon antistatique triple épaisseur, 185 g/m^2, imperméable à l'eau et perméable à la transpiration (IEPT), orangé international NNO : 8305-20-003-5353
Type IV	Tissu de nylon antistatique triple épaisseur, 185 g/m^2, imperméable à l'eau et perméable à la transpiration (IEPT), rouge

2. DOCUMENTS APPLICABLES

2.1 Documents du gouvernement. Les publications suivantes font partie intégrante de la présente spécification selon les modalités indiquées ci-après. La version en vigueur à la date des documents d'achat s'applique. Des copies de la présente spécification peuvent être obtenues du ministère de la Défense nationale, Ottawa (Ontario), Canada K1A 0K2, à l'attention de : DAPES 2-2.

DAPES 2-2-80-500 : Spécification visant le DCamC^{MC} (RBT) [dessin de camouflage canadien (régions boisées tempérées)]

DAPES 2-2-80-501 : Spécification visant le DCamC^{MC} (RA) [dessin de camouflage canadien (régions arides)]

2.2 Autres publications. Les documents suivants font partie intégrante de la présente spécification dans la mesure prescrite par cette dernière. La version en vigueur à la date de fabrication s'applique. La source de diffusion est celle qui est indiquée.

AATCC Technical Manual
P.O. Box 12215
Research Triangle Park, North Carolina 27709
ÉTATS-UNIS
Téléphone : 919-549-3526
Site Internet : http://www.aatcc.org/

ASTM International
P.O.Box C700
West Conshohocken, PA 19428-2959
ÉTATS-UNIS
Téléphone : 610-832-9585
Courriel : service@astm.org
Site Internet : http://www.astm.org/

CAN/CGSB-4.2 Textile Test Methods
Canadian General Standards Board
Gatineau, QC K1A 1G6
Telephone: 819-956-0425 or 1-800-665-2472
Email: ncr.cgsb-ongc@pwgsc.gc.ca
Internet:
http://www.pwgsc.gc.ca/cgsb/home/index-e.html

CAN/CGSB-4.2 Méthodes pour épreuves textiles
Office des normes générales du Canada
Gatineau (Québec) K1A 1G6
Téléphone : 819-956-0425 ou 1 800-665-2472
Courriel : ncr.cgsb-ongc@pwgsc.gc.ca
Site Internet : http://www.tpsgc-pwgsc.gc.ca/cgsb/home/index-f.html

FED-STD-191A Textile Test Methods
General Services Administration
Federal Supply Service
FSS Product Acquisition Center - Supply Standards Division (FLAS)
Arlington, VA 22202 USA
Telephone: 703-605-2567
Internet: http://apps.fss.gsa.gov/pub/fedspecs/
Download Documents:
http://assist.daps.dla.mil/quicksearch/

FED-STD-191A Textile Test Methods
General Services Administration
Federal Supply Service
FSS Product Acquisition Center - Supply Standards Division (FLAS)
Arlington, VA 22202
ÉTATS-UNIS
Téléphone : 703-605-2567
Site Internet :
http://apps.fss.gsa.gov/pub/fedspecs/
Pour télécharger des documents :
http://assist.daps.dla.mil/quicksearch/

Transport Canada
AMBE-A
Tower C
330 Sparks St.
Ottawa, ON K1A 0N8
Website: http://tc.gc.ca/

Transports Canada
AMBE-A
Tour C
330, rue Sparks
Ottawa (Ontario) K1A 0N8
Site Internet : http://tc.gc.ca/

2.3 Sealed Patterns.

DSSPM 270-01: Cloth, Nylon, Trilaminate, 185 g/m^2, Static-Dissipative, Waterproof, Moisture Vapour Permeable, Type I, CADPAT™ (TW). Sealed for construction, finish, hand and CADPAT™ (TW) pattern, colours, colour distribution, motif size, clarity, acceptable print quality.

DSSPM 264-07: Cloth, Nylon, Trilaminate, 185 g/m^2, Static-Dissipative, Waterproof, Moisture Vapour Permeable, Type II, CADPAT™ (AR). Sealed for construction, finish, hand and CADPAT™ (AR) pattern, colours, colour distribution, motif size, clarity, acceptable print quality.

DCGEM 263-78: Cloth, Plain Weave, Nylon, 5.75 oz/yd^2. Sealed for colour International Orange.

2.4 Modèles réglementaires

DAPES 270-01 : Tissu de nylon antistatique triple épaisseur, 185 g/m^2 imperméable à l'eau et perméable à la transpiration, type I, DCamC^{MC} (RBT). Pour la confection, la main, le fini et le motif DCamC^{MC} (RBT), les couleurs, la distribution des couleurs, la taille des motifs, la clarté et la qualité d'impression acceptable.

DAPES 264-07 : Tissu de nylon antistatique triple épaisseur, 185 g/ m^2, imperméable à l'eau et perméable à la transpiration, type II, DCamC^{MC} (RA). Pour la confection, la main, le fini et le motif du DCamC^{MC} (RA), les couleurs, la distribution des couleurs, la taille des motifs, la clarté et la qualité d'impression acceptable.

DCGEM 263-78: Tissu uni de nylon, 5,75 oz/vg^2. Approuvé pour l'orangé international

DSSPM 262-08: Cloth, Polyester/ Cotton, 50%/50%. For colour red only.

DSSPM 262-08 : Tissu du polyester/coton, 50%/50%. Pour couleur rouge seulement.

2.4 Order of Precedence

2.4.1 In the event of any inconsistency in contract documents such as contract, specification and sealed patterns, the order of precedence shall be contract, specification, and sealed pattern.

2.4.2 In the event of a conflict between the text of this specification and the references cited herein, the text of this specification shall take precedence.

2.4.3 In the event of inconsistency within the specification, the Design Authority (DSSPM 2-11) shall be contacted for clarification.

2.4.4 For any inconsistency in technical details between languages, the language of the original document, which in this case is English, shall take precedence.

2.4 Ordre de préséance

2.4.1 En cas d'incohérence entre les documents contractuels, soit le contrat, la spécification et les échantillons réglementaires, l'ordre de préséance est le suivant : le contrat, la spécification et les échantillons réglementaires.

2.4.2 En cas de divergence entre les documents mentionnés aux présentes et le contenu de la présente spécification, cette dernière a préséance.

2.4.3 En cas d'incohérence dans l'énoncé de la spécification, il faut communiquer avec l'autorité responsable de la conception (DAPES 2-11) pour obtenir des précisions.

2.4.4 En cas d'incohérence dans les détails techniques, entre les deux langues, la langue du document d'origine, dans ce cas-ci l'anglais, a préséance.

3. REQUIREMENTS

3.1 Sealed Pattern. A sealed pattern, when available, will be supplied to the successful bidder. This will be used for the guidance of the manufacturer in all factors not covered by this specification. Under no circumstances shall a sealed pattern be mutilated or cut.

3.2 Workmanship. The material covered by this specification shall be free of imperfections or blemishes such as may adversely affect its appearance or serviceability. For inspection purposes, imperfections and blemishes shall be considered defects when clearly visible at a normal inspection distance of approximately one metre under good, preferably North Light, lighting conditions.

3.3 Yarns. The fibre content of the yarns in the outer face woven fabric shall be 100% nylon. The yarns used for the inner face tricot fabric shall be composed of nylon or polyester and bicomponent carbon/nylon or carbon/polyester fibre. Carbon sheath bicomponent fibres have been found to meet the stated requirements.

3.4 Fabric.

3.4.1 Fabric structure. This fabric shall be a trilaminate structure. The exterior face shall be a tightly

3. EXIGENCES

3.1 Modèle réglementaire. Un modèle réglementaire, lorsque disponible, doit être fourni au soumissionnaire retenu. Il doit constituer le modèle normalisé en ce qui a trait seulement à toute propriété non définie dans la présente spécification.

3.2 Qualité d'exécution. Le tissu visé par la présente spécification doit être exempt de défauts pouvant nuire à son aspect ou à sa tenue en service. À des fins d'inspection, sont considérés comme défauts ceux qui sont clairement visibles à une distance d'inspection normale d'environ un mètre sous un bon éclairage, de préférence la lumière du nord.

3.3 Fils. La teneur en fibres du fil de l'endroit du tissu doit être 100 % nylon. Le fil utilisé pour l'envers tricot du tissu doit être un mélange de fibres de nylon ou de polyester et de carbone/nylon ou de carbone/polyester. Les fibres bicomposées à gaine de carbone sont conformes aux exigences

3.4 Tissu

3.4.1 Structure du tissu. Le tissu doit être constitué de trois épaisseurs. L'épaisseur extérieure consiste en un

woven, plain weave, nylon fabric which is laminated to a waterproof moisture vapour permeable (WMVP) membrane. The inside face (reverse side) of the WMVP membrane shall be laminated to a polyester or nylon tricot fabric. Anti-static fibres shall be incorporated into this tricot lining component (see 3.3 Yarns for details). The lining fabric is to contain carbon yarns in a grid pattern. The spacing between grid lines is not to exceed 6 mm (1/4”). This 3-layer fabric composite does not require a separate lining when made up into a garment.

tissu de nylon tissé serré, à armure unie, contrecollé sur une membrane imperméable à l’eau et perméable à la transpiration (IEPT). L’envers (ou face intérieure) de la membrane IEPT doit être contrecollée à une membrane en tricot de polyester ou de nylon. Des fibres antistatiques doivent être intégrées à la membrane en tricot (pour plus de détails, voir 3.3, Fils). La membrane servant de doublure doit contenir des fils de carbone formant des mailles espacées d’au plus 6 mm (1/4 po). Ce tissu triple épaisseur ne nécessite pas d’être doublé lorsqu’il est utilisé dans la confection d’un vêtement.

3.4.2 When tested in accordance with the applicable test methods, the trilaminated, static-dissipative, waterproof, moisture vapour permeable (WMVP) rainwear/windbreaker fabric shall comply with the requirements specified in Table I.

3.4.2 Lorsqu’il est soumis aux essais selon les méthodes approuvées, le tissu antistatique triple épaisseur, imperméable à l’eau et perméable à la transpiration antistatique (IEPT) des vêtements de pluie et des coupe-vent doit respecter les exigences prescrites au tableau I.

3.4.3 The fabric shall be capable of having its sewn seams sealed, with tape, in a waterproof durable fashion. Special sealing techniques may be required due to the presence of anti-static fibres in the composite fabric.

3.4.3 Les coutures du tissu doivent être renforcées par un biais pour plus de durabilité et d’imperméabilité. La présence de fibres antistatiques dans le tissu composite peut exiger des techniques de scellage spéciales.

3.4.4 Delamination. The fabric shall not show any visible signs of delamination or loss of film during the life of the garment.

3.4.4 Décollage. Le tissu triple épaisseur ne doit pas présenter de signes visibles de décollage ni de perte d’enduit ou de film pendant la vie utile de l’article.

3.4.4.1 Delamination – Definition. Delamination is defined as the undesirable separation of the components of bonded or laminated fabrics as evidenced through bubbles, cracks, or formation of holes and loose edges on any of the layers. Separation of substrate from film at the moment of failure or immediately preceding failure during hydrostatic resistance, tensile, puncture and tear testing is not considered to be delamination.

3.4.4.1 Définition de décollage. Le décollage est défini comme la séparation non souhaitée des composants d’un tissu contrecollé ou stratifié, attestée par la présence de bulles, de fissures ou la formation de trous et de bords lâches sur l’une des épaisseurs. La séparation entre le substrat et le film au moment de l’éclatement (ou juste avant) qui se produit au cours des essais de pénétration d’eau à haute pression et des essais d’élasticité, de perforation et de déchirement n’est pas considérée comme du décollage.

3.4.5 Seam tape. The tape on the sealed seams must not peel off or separate with wear and/or normal maintenance. Sealed seams, when exposed to chemicals must not delaminate or show any visible signs of loss of integrity, and must retain a minimum level of hydrostatic and water resistance properties. The seam tape must not decrease the static dissipative properties of the garment as a whole. The performance of the taped seams shall comply with Table II.

3.4.5 Coutures renforcées. Les coutures renforcées avec un biais ne doivent pas décoller à l’usure ni à l’entretien normal. Lorsqu’elles sont exposées à des substances chimiques, les coutures renforcées ne doivent pas se décoller ni montrer des signes de perte d’intégrité, et elles doivent conserver un niveau minimal de résistance à la pression et à l’eau. La main des coutures scellées ne doit pas être trop différente (plus rigide) que la main du tissu stratifié. Le rendement des coutures scellées doit être conforme au tableau II.

3.4.6 Finish. A finish may need to be applied to the fabric in order to provide the oil and water repellency

3.4.6 Fini. Un fini peut devoir être appliqué au tissu, afin de fournir les propriétés de déperlance et

properties required in Table I. Such a finish shall not adversely affect the hand or stiffness of the fabric.

3.5 Colour. Colour shall be as specified in the procurement documents. The colour required shall match the applicable sealed pattern or numerical colour co-ordinates, whichever is specified. All visual colour matching to sealed patterns shall be done in accordance with CAN/CGSB-4.2 No. 41 Standard Light Sources for Colour Matching of Textiles. A colour match under north-sky daylight is the most important measurement. Metamersim shall be no greater than that exhibited by the Sealed Pattern.

3.5.1 CADPAT™. When specified in procurement documents, the woven nylon face of the rainwear/windbreaker fabric shall be printed with either the Temperate Woodland (TW) or Arid Region (AR) Canadian Disruptive Pattern (CADPAT)™. The technical requirements are defined and included in either DSSPM 2-2-80-500 for CADPAT™ (TW) or DSSPM 2-2-80-501 for CADPAT™ (AR).

3.5.1.1 Printing. The CADPAT™ pattern(s) shall be printed in a wet process with dyes. Printing may be carried out on undyed or pre-dyed goods. Colour coverage must be thorough and all colours must meet the coordinates defined numerically in DSSPM 2-2-80-500 or DSSPM 2-2-80-501. Clarity and definition must also be at least as good as depicted by the applicable sealed pattern. Evidence of overlap of colours shall be minimal.

3.5.1.2 Colour coordinates. CADPAT™ colour coordinates shall fall within the specified tolerances stated in DSSPM 2-2-80-500 or DSSPM 2-2-80-501, as applicable, when new. Colour measurements taken after 5 launderings when laundered in accordance with CAN/CGSB-4.2 No. 58 III.E. must be submitted when requested. Unless otherwise specified in the procurement documents, compliance with DSSPM 2-2-80-500 and DSSPM 2-2-80-501 is not required after 5 launderings for the time being.

3.5.1.3 Infra-red reflectance (IRR).

3.5.1.3.1 CADPAT™ (TW). The on-going Canadian requirement is to achieve the IRR performance values, ranging from 400 nm to 2000 nm (average green and black), or 730 nm to 2000 nm (light green and brown) as stated in DSSPM 2-2-80-500. Currently, emphasis is

d'oléofugation prescrites au tableau I. Un tel fini ne doit pas nuire à la main ni à la rigidité du tissu.

3.5 Couleur. La couleur doit être celle qui est prescrite dans les documents d'achat. La couleur requise doit être assortie au modèle réglementaire applicable ou aux coordonnées colorimétriques numériques, conformément aux prescriptions. Tout appariement des couleurs visuelles avec les modèles réglementaires doit être effectué conformément à la norme CAN/CGSB-4.2 n° 41, Sources normalisées de lumière pour l'appariement des couleurs des textiles. L'appariement des couleurs à la lumière diurne du nord est la mesure la plus importante. Le métamérisme ne doit pas être supérieur à celui du modèle réglementaire.

3.5.1 DCamC^{MC}. Lorsque cela est prescrit dans les documents d'achat, la face tissée du nylon pour les vêtements de pluie et les coupe-vent doit être imprimée du dessin de camouflage canadien (DCamC)^{MC} pour régions boisées tempérées (RBT) ou pour régions arides (RA). Les exigences techniques sont contenues dans la DAPES 2-2-80-500, dans le cas du DCamC^{MC} (RBT), ou dans la DAPES 2-2-80-501, pour le DCamC^{MC} (RA).

3.5.1.1 Impression. Les motifs du DCamC^{MC} doivent être imprimés selon un procédé humide à base de teinture. L'impression doit être effectuée sur des produits non teints ou teints au préalable. La couverture de la couleur doit être complète et toutes les couleurs doivent respecter les codes numériques de la DAPES 2-2-80-500 ou de la DAPES 2-80-501. La clarté et la définition doivent être aussi bonnes que celles décrites pour le modèle réglementaire. Le chevauchement des couleurs doit être minimal.

3.5.1.2 Coordonnées colorimétriques. Les coordonnées colorimétriques du DCamC^{MC} doivent respecter la tolérance prévue dans la DAPES 2-2-80-500 ou la DAPES 2-2-80-501, selon le cas, lorsque le tissu est neuf. Les résultats de l'évaluation des couleurs après cinq lavages selon la CAN/CGSB-4.2 n° 58 III.E doivent être présentés sur demande. Sauf indication contraire dans les documents d'achat, la conformité à la DAPES 2-2-80-500 et à la DAPES 2-2-80-501 après cinq lavages n'est pas nécessaire pour le moment.

3.5.1.3 Réflectance dans l'infrarouge (RIR)

3.5.1.3.1 DCamC^{MC} (RBT). Selon les exigences canadiennes actuelles, on doit respecter des valeurs de rendement en matière de RIR entre 400 et 2 000 nm (vert moyen et noir), ou entre 730 et 2 000 nm (vert pâle ou brun), comme le prescrit le document DAPES

being placed on the compulsory regions, which extend to 1350 nm for all colours except black, for which the entire curve forms the mandatory range. Every effort should be made to meet the required curves beyond 1350 nm. Unless otherwise specified, the IRR requirements must be met both when manufactured and after 5 laundering cycles when laundered in accordance with CAN/CGSB-4.2 No. 58 III.E.

3.5.1.3.2 CADPAT™ (AR). The on-going Canadian requirement is to achieve the IRR performance values, ranging from 400 nm to 2000 nm as stated in DSSPM 2-2-80-501. Currently, emphasis is being placed in the compulsory regions, which are from 700 nm to 1450 nm. Every effort should be made to meet the requirements completely. The IRR requirements must be met both when manufactured and after 5 laundering cycles when laundered in accordance with CAN/CGSB-4.2 No. 58 III.E.

3.5.1.4 Colour and IRR requirements are applicable to the fabric after all required finishes have been applied.

3.5.2 Inner knit fabric colour.

3.5.2.1 For CADPAT™ (TW), the inner knit fabric shall be dyed to match the average green (dark green) component of the CADPAT™ (TW) pattern.

3.5.2.2 For CADPAT™ (AR), the inner knit fabric shall be dyed to match the light sand (lightest) component of the CADPAT™ (AR) pattern.

3.5.2.3 For International Orange and Red, the inner knit fabric shall preferably be dyed to match the shell or be dyed black.

3.6 Performance. Required properties and performance levels are described in Table I and Table II. All testing shall be conducted by an accredited independent laboratory familiar with a wide range of textile testing. Testing carried out by Canadian university textile testing laboratories will also be acceptable. Any deviation from this requirement must have prior written approval from the Design Authority (para 6.2.1).

2-2-80-500. Actuellement, on met l'accent sur les zones obligatoires jusqu'à 1 350 nm pour toutes les couleurs sauf le noir, pour lequel l'ensemble de la courbe représente la gamme obligatoire. On ne devrait ménager aucun effort pour respecter les courbes requises au-delà de 1 350 nm. Sauf indication contraire, les exigences relatives à la RIR doivent être respectées tant pour les tissus fabriqués (neufs), qu'après cinq cycles de lavage selon la norme CAN/CGSB-4.2, n° 58 III E.

3.5.1.3.2 DCamC^{MC} (RA). Selon les exigences canadiennes actuelles, on doit respecter des valeurs de rendement en matière de RIR entre 400 et 2 000 nm (vert moyen et noir), comme le prescrit le document DAPES 2-2-80-501. Actuellement, on met l'accent sur les zones obligatoires, qui vont de 700 à 1 450 nm. On ne devrait ménager aucun effort pour satisfaire à ces exigences. Sauf indication contraire, les exigences relatives à la RIR doivent être respectées tant pour les tissus fabriqués (neufs), qu'après cinq cycles de blanchissage selon la norme CAN/CGSB-4.2, n° 58 III E.

3.5.1.4 Les exigences relatives aux couleurs et à la RIR sont applicables au tissu après que tous les finis nécessaires ont été appliqués.

3.5.2 Couleur du tricot intérieur

3.5.2.1 Pour le DCamC^{MC} (RBT), la couleur du tricot intérieur doit être appariée au vert moyen (vert foncé) du motif du DCamC^{MC} (RBT).

3.5.2.2 Pour le DCamC^{MC} (RA), la couleur du tricot intérieur doit être appariée au sable clair (le plus clair) du motif du DCamC^{MC} (RA).

3.5.2.3 Pour l'orangé international et rouge, la couleur du tricot intérieur doit être de préférence appariée à celle du vêtement extérieur ou être noir.

3.6 Rendement. Les propriétés et l'efficacité exigées figurent aux tableaux I et II. Tous les essais doivent être réalisés par un laboratoire indépendant accrédité ayant l'expérience nécessaire pour mener un large éventail d'essais textiles. Les essais textiles menés dans les laboratoires universitaires seront aussi acceptés. Tout écart par rapport à la présente spécification doit être approuvé au préalable par l'autorité responsable de la conception (par. 6.2.1).

4. VALIDATION

4.1 The contractor is responsible for the performance of all inspection requirements as specified herein. The Government reserves the right to perform any verification testing to confirm compliance with the stated requirements. The contractor is responsible for ensuring that all material or services submitted to the Government for acceptance complies with all requirements of the contract.

4.2 The manufacturer of the waterproof moisture vapour permeable layer shall provide the garment manufacturer with sufficient information to enable the garment to be made for maximum benefit accruing from use of this fabric. Data such as taping products and procedures, etc. are the responsibility of the static-dissipative waterproof moisture vapour permeable fabric manufacturer working in conjunction with the garment manufacturer. All data shall be made available to the Department of National Defence on request.

4.3 The fabric is to be tested at regular intervals and must meet the colour and IRR requirements specified in the contract. In addition, the fabric must meet the requirements described in Tables I and II. Reduced testing requirements may be specified in the contracting documents.

5. PACKAGING

5.1 Packaging, packing, and marking of shipping containers shall be in accordance with the terms of the contract. No commercial trade names, hangtags insertions shall be visible on the finished product, or packaged with it.

6. ADDITIONAL INFORMATION

6.1 Ordering Data. Procurement documents should specify the following:

a. Title, number and date of this specification
b. NATO Stock number of required item
c. Nomenclature/Classification (textile specification)
d. Pre-production requirements
e. Packaging, packing, and marking of shipping containers
f. The Design Authority
g. The Quality Assurance Authority

4. VALIDATION

4.1 L'entrepreneur doit se conformer à toutes les exigences d'inspection précisées aux présentes. Le gouvernement se réserve le droit d'effectuer toute vérification pour déterminer la conformité avec les présentes exigences. L'entrepreneur doit faire en sorte que le matériel et les services proposés au gouvernement respectent les exigences du contrat.

4.2 Le fabricant du tissu formant la membrane imperméable à l'eau et perméable à la transpiration doit donner au fabricant du vêtement assez d'information pour lui permettre de confectionner un vêtement offrant le maximum d'avantages liés au tissu. Les données comme celles sur l'utilisation d'un biais et la façon de le poser sont de la responsabilité du fabricant du tissu IEPT et du fabricant du vêtement. Toutes les données doivent être mises à la disposition du ministère de la Défense nationale, sur demande.

4.3 Le tissu doit être régulièrement soumis à des essais et être conforme aux exigences contractuelles concernant la couleur et la RIR. Il doit également respecter les exigences des tableaux I et II. Les documents contractuels peuvent prescrire des exigences moindres relatives aux essais.

5. CONDITIONNEMENT

5.1 Le conditionnement, l'emballage et le marquage des contenants d'expédition doivent être conformes aux modalités du contrat. Aucun nom commercial, aucune étiquette volante ni insertion ne doivent être visibles sur le produit fini, ni emballés avec celui-ci.

6. INFORMATION ADDITIONNELLE

6.1 Données de commande. Les documents d'achat doivent préciser :

a. Titre, numéro et date de la présente spécification
b. Numéro de nomenclature OTAN (NNO) de l'article requis
c. Nomenclature/classification (spécification textile)
d. Exigences de présérie
e. Conditionnement, emballage et marquage des contenants d'expédition
f. Autorité responsable de la conception
g. Autorité responsable de l'assurance de la qualité

6.2 Definition of Terms

6.2.1 Design Authority. The Design Authority is the Government agency responsible for the technical aspects of the design and for changes to the design. The Design Authority for this requirement is the Directorate of Soldier Systems Programme Management (DSSPM 2-11), Department of National Defence.

6.2.2 Quality Assurance Authority. The Quality Assurance Authority is the Government agency responsible for providing assurance the materiel and services supplied by the contractor are in accordance with the terms of the contract. The Quality Assurance Authority is the Directorate of Quality Assurance (DQA), Department of National Defence.

6.2.3 Master sealed pattern. A master sealed pattern is the authorized prototype of the item to be produced and is held only by the government.

6.2.4 Sealed pattern. A sealed pattern is a duplicate of the master sealed pattern and is available to the manufacturer to be used as a guide in production.

6.3 The production of a product to this specification, or the evaluation of a product to this specification, may require the use of materials and/or equipment that could be hazardous. This specification does not purport to address all safety, health and environmental concerns, if any associated with its use. It is the responsibility of the user of this specification to establish appropriate safety, health and environmental practices and to determine the applicability of regulatory limitations prior to use.

6.4 Background Information.

6.4.1 This fabric was introduced in response to a requirement for Air Force Ground Crew clothing to have low electrostatic propensity. Ground crew activities include the refuelling of aircraft and the use of electronic instruments. There is a potential hazard of jet fuel vapours igniting due to electrostatic discharge (ESD) from clothing or from a charged human body. Electronic components can be permanently damaged by electrostatic discharges. Although the discharge hazard is slight, there is a desire for clothing that has low propensity for electrostatic discharge. The fabric must

6.2 Définitions des termes

6.2.1 Autorité responsable de la conception. L'autorité responsable de la conception est l'organisme gouvernemental chargé des aspects techniques de la conception et des modifications connexe. Dans le cas des articles visés par la présente spécification, il s'agit de la Direction – Administration du programme de l'équipement du soldat (DAPES) du ministère de la Défense nationale.

6.2.2 Autorité responsable de l'assurance de la qualité. L'autorité responsable de l'assurance de la qualité est l'organisme gouvernemental chargé d'assurer que le matériel et les services fournis par l'entrepreneur satisfont aux conditions du contrat. L'autorité responsable de l'assurance de la qualité est le directeur de l'assurance de la qualité, ministère de la Défense nationale du Canada.

6.2.3 Modèle réglementaire principal. Prototype autorisé de l'article qui doit être fabriqué dont le gouvernement est le seul détenteur.

6.2.4 Modèle réglementaire. Copie exacte du modèle réglementaire principal que le fabricant peut utiliser comme guide pour produire l'article.

6.3 La fabrication ou l'évaluation d'un produit conformément à la présente spécification pourrait nécessiter l'utilisation de matériel ou d'équipement dangereux. La présente spécification n'a pas pour objet de traiter de toutes les préoccupations relatives à la santé, à la sécurité et à l'environnement liées à son utilisation. Il incombe à l'utilisateur de la spécification d'établir au préalable des méthodes appropriées qui tiennent compte des questions d'environnement, de santé et de sécurité, et de déterminer les restrictions réglementaires applicables.

6.4 Renseignements de base

6.4.1 Le présent tissu a été introduit en réponse à la nécessité que les vêtements du personnel de la Force aérienne présentent une faible propension à l'accumulation de charges électrostatiques. Certaines activités du personnel de piste, comme l'avitaillement des aéronefs en carburant et l'utilisation d'instruments électroniques, présentent le risque que des vapeurs de carburéacteur s'enflamment à la suite d'une décharge électrostatique (DES) des vêtements ou du corps humain, sans parler du risque de dommage permanent des composants électroniques. Même si le risque de

not contribute to the discharge of electrostatic sparks that could ignite jet fuel vapours or cause damage to electronic instruments. Ideally the outer surface of the fabric shall be of low electrostatic propensity and the inner surface, next to body, shall be static dissipative.

décharge est minime, il est préférable que la propension des vêtements à l'accumulation de charges électrostatiques soit faible. Le tissu ne doit pas favoriser la création d'étincelles électrostatiques susceptibles d'enflammer les vapeurs de carburéacteur ni d'endommager les instruments électroniques. Idéalement, la face extérieure du tissu doit avoir une faible propension à l'accumulation de charges électrostatiques, tandis que la surface intérieure, en contact avec le corps, doit dissiper l'électricité statique.

6.4.2 Anti-static refers to the reduction or elimination of triboelectric charge generation and discharge. Anti-static materials minimize the generation of electrostatic charges. The ESD property of a material is not solely dependent upon the material's surface resistivity or static decay performance. These properties can be used for ranking materials or for identifying which materials may be more or less likely to pose a discharge hazard. REGARDLESS OF THE CLOTHING ITEMS BEING WORN, PROPER GROUNDING PROCEDURES MUST ALWAYS BE FOLLOWED.

6.4.2 Le terme « antistatique » s'entend de la réduction ou de l'élimination du risque de génération de charges et de décharges triboélectriques. Les tissus antistatiques limitent ce risque. Les propriétés anti-DES d'un matériau ne dépendent pas seulement de sa résistivité superficielle ou de son taux de diminution de l'électricité statique. De plus, elles peuvent servir à classer les tissus ou à déterminer le risque de décharge. QUEL QUE SOIT LE VÊTEMENT PORTÉ, ON DOIT TOUJOURS SUIVRE LES BONNES PROCÉDURES DE MISE À LA TERRE.

6.4.3 The ESD testing requirements in Table I are provided for the purposes of procurement. The fabric described in this specification in its entirety has been found to exhibit static dissipative performance properties in other laboratory testing carried out at the development stage to ensure compliance with the Air Force requirements for ground crew clothing. Analysis of the results obtained during the development stage indicated that the two methods specified would be sufficient for validation during procurement, provided that all specified requirements are met.

6.4.3 Les exigences du tableau I en matière d'essai DES visent l'approvisionnement. Le tissu entièrement décrit dans la présente spécification a présenté, au stade de la conception, des propriétés de dissipation de l'électricité statique au cours d'autres essais en laboratoire visant à assurer la conformité des vêtements du personnel de piste aux exigences de la Force aérienne. D'après l'analyse des résultats obtenus au stade de la conception, les deux méthodes mentionnées devraient suffire aux besoins de validation au moment de l'achat, à condition que les exigences soient respectées.

6.4.4 The static-dissipative, waterproof, moisture vapour permeable rainwear/windbreaker fabric must be launderable in domestic machines, coin operated machines, commercial or field laundries. It shall be tumble machine dryable. The fabric shall not show delamination or excessive shrinkage or stretching when exposed to these cleaning procedures throughout its essential wear life.

6.4.4 Le tissu antistatique imperméable à l'eau et perméable à la transpiration servant à la confection des vêtements de pluie et des coupe-vent doit pouvoir être lavé dans des machines domestiques ou payantes ou dans les lavoirs commerciaux ou ceux présents sur le terrain et être séché par culbutage. De plus, il ne doit pas présenter après le lavage et le séchage de signe de décollage ni de rétrécissement ou d'étirement excessif pendant toute la durée de vie du vêtement.

6.4.5 The essential wear life is five years and/or 20 launderings. Undue degradation of any properties with normal wear, care indicated, and exposure to normal military operational chemicals is not acceptable over the anticipated service life of the garments.

6.4.5 Les vêtements doivent pouvoir être portés pendant cinq ans et/ou lavés 20 fois. La perte indue de leurs propriétés en cas d'utilisation normale, malgré les soins indiqués, et d'exposition à des substances chimiques dans le cadre normal des opérations militaires n'est pas acceptable au cours de la durée de vie prévue des vêtements.

6.4.6 Garments subjected to unusual, excessive or prolonged chemical exposure resulting in visible damage to the fabric shall be withdrawn from service as soon as is practical. Until the time of replacement, the fabric shall retain a minimum level of water resistance, breathability and static-dissipative properties.

6.4.6 Les vêtements soumis à une exposition inhabituelle, excessive ou prolongée à des produits chimiques endommageant de façon visible le tissu doivent être retirés du service sans tarder. Entre-temps, ils doivent présenter une imperméabilité à l'eau, une perméabilité à la transpiration et des propriétés antistatiques minimales.

7. TESTING NOTES

7.1 The following paragraphs shall supplement the testing properties provided in Table I and Table II. Note that all requirements in Table I including stiffness, apply to the final fabric after all treatments and finishes have been applied.

7.2 Stiffness testing. The Kawabata bending test is to be carried out on NEW fabric. A new roll or bolt of fabric shall be submitted to the laboratory. The laboratory shall cut test specimens from fabric taken directly from the new roll or bolt. *It is imperative that the new fabric and the test specimens be handled as little as possible prior to conducting the Kawabata bending test.*

7.3 Flexing treatment. When subjecting samples to ASTM F392 flexing treatments, the long dimension of each specimen shall be cut in the lengthwise, or warp direction of the fabric.

7.4 Test procedure for chemical resistance of fabric and taped seams. Fabric or taped-seam samples of sufficient size and quantity to carry out the following tests will be prepared. Five new specimens from each sample shall be tested separately to each chemical. The chemicals shall be placed on the side of the fabric that is intended to be the outer face side.

i) For liquid chemicals, a quantity of 100 ml/m^2 of the test liquid shall be placed on the top of the test fabric and spread as evenly as possible over the whole surface using a plastic squeegee. As much as possible of the test fabric should be covered with chemical, but leaving a border of one (1) cm width uncontaminated. This should ensure that none of the applied chemical seeps outside the weight, after it is applied.

ii) For the non-liquid cream, a quantity of 50 g/m^2 of the chemical shall be placed on the top of the test

7. NOTES CONCERNANT LES ESSAIS

7.1 Les prochains paragraphes complètent les exigences d'essai des tableaux I et II. Les exigences du tableau, y compris en ce qui concerne la rigidité, s'appliquent au tissu final, une fois que tous les traitements et finis auront été appliqués.

7.2 Essai de rigidité. Les tissus NEUFS doivent subir l'essai de pliage Kawabata. À cette fin, un rouleau ou un coupon de tissu neuf doit être envoyé au laboratoire. Celui-ci doit prélever des spécimens à même le rouleau ou le coupon. *Il est essentiel que le tissu neuf et les spécimens d'essai soient manipulés le moins possible avant l'essai de pliage Kawabata.*

7.3 Essai de flexion. Lorsqu'on soumet les échantillons aux essais de flexion selon la norme ASTM F392, chaque spécimen de tissu doit être coupé dans le sens de la longueur (ou du fil de chaîne).

7.4 Essais de résistance aux substances chimiques du tissu et des coutures renforcées par un biais. Il faut préparer des échantillons de tissu ou de biais servant à border les coutures de la taille et de la quantité suffisantes pour réaliser les essais suivants. Pour chaque substance chimique, cinq nouveaux spécimens provenant de chaque échantillon doivent être mis à l'essai séparément. Les substances chimiques doivent être placées sur la face du tissu désignée comme étant la face extérieure.

i) Dans le cas d'une substance chimique liquide, verser 100 mL/m^2 de produit sur le dessus du tissu et l'étaler uniformément sur toute la surface au moyen d'une raclette en plastique. Couvrir la plus grande surface de tissu possible avec la substance chimique, en évitant de contaminer une bordure de un centimètre. On s'assurera ainsi que la substance chimique ne coulera pas à l'extérieur du tissu après l'application .

ii) Dans le cas des crèmes, verser 50 g/m^2 de substance chimique sur le spécimen et l'étaler

fabric and spread as evenly as possible over the whole surface using a plastic squeegee. A border of one (1) cm width shall be left uncontaminated.

iii) The whole test area shall then be covered with a glass plate and weighted to a total pressure of 6.895 kPa (1 psi).

iv) This weighted cover shall be left in place for two (2) hours.

v) The fabric or seam sample shall then be submitted to water resistance and hydrostatic resistance testing, CAN/CGSB-4.2-M No. 26.5, and must comply with the requirements in Table I and Table II. All five (5) specimens must pass. Note that the side of the fabric that was exposed to the chemical will be facing the water in testing.

7.5 Preparation of multi-coloured specimens.
When preparing test specimens for hydrostatic resistance, water resistance, abrasion resistance, moisture vapour permeability, colourfastness to light, colourfastness to crocking, colourfastness to laundering, oil repellency, water repellency, and chemical resistance tests, care should be taken to ensure that all colours are represented in the specimens. All colours must meet the requirements stated in Table I, including the requirements for delamination.

aussi uniformément que possible sur toute la surface au moyen d'une raclette en plastique, en évitant de contaminer une bordure de un centimètre.

iii) Couvrir entièrement la surface utilisée pour l'essai d'une plaque de verre soumise à une pression de 6,895 kPa (1 lb/po²).

iv) Ce montage sous pression doit rester en place pendant deux heures.

v) Le spécimen de tissu ou de couture doit être soumis à un essai de résistance à l'eau et de pénétration d'eau à haute pression conformément à la norme CAN/CGSB-4.2-M, n° 26.5 et doit satisfaire aux exigences prescrites aux tableaux I et II. Les cinq spécimens doivent réussir l'essai. Au cours de l'essai, la face du tissu ayant été exposée à la substance chimique doit être contre l'eau.

7.5 Préparation des spécimens multicolores.
Lorsqu'on prépare les spécimens en vue des essais de résistance à l'eau, de pénétration d'eau à haute pression, de résistance à l'abrasion, de perméabilité à la transpiration, de solidité de la couleur à la lumière, au frottement et au lavage, d'oléofugation et de déperlance et de résistance aux substances chimiques, toutes les couleurs doivent être représentées sur les spécimens et être conformes aux exigences du tableau I, y compris les exigences relatives au décollage.

TABLE I
TESTING REQUIREMENTS FOR FINISHED FABRIC

Test	Property	Test Method	Requirement	Minimum Acceptable	Maximum Acceptable
1.	MASS (g/m^2)	5.1 *[1]	185 g/m^2	- must be sufficient to support tailoring details of the garment without exceeding the maximum acceptable	203 g/m^2
2.	THICKNESS (mm)	37 *[1] 1 kPa pressure	0.4 mm		0.5 mm
3.	BREAKING STRENGTH (N) after 5 washes #	9.1 *[1] (50 mm cut strip)		Warp: 1000 N Weft: 650 N	
4.	TEAR STRENGTH (N) after 5 washes #	12.1 *[1]		Warp: 35 N Weft: 25 N	
5.	PUNCTURE RESISTANCE (N) after 5 washes #	Para 4.5 of TP 1324 *[2]		225 N	
6.	STIFFNESS ($gf.cm^2/cm$)	see para 7.2 Kawabata Evaluation System*[3]: Bending Property (B Mean) Sensitivity: 5x1 Specimen width: 10 cm	Length: 0.600 $gf.cm^2/cm$ Width: 0.300 $gf.cm^2/cm$	- must be of sufficient stiffness to support tailoring details of the garment without exceeding maximum values	Length: 1.000 $gf.cm^2/cm$ Width: 0.500 $gf.cm^2/cm$
7.	DIMENSIONAL STABILITY (%) after 5 washes #	67 *[1] Laundering per: 58 *[1] III E (50ºC, normal agitation, tumble dry normal setting)			Warp: 5.0 % Weft: 5.0 %
8.	HYDROSTATIC RESISTANCE (kPa) face (side to be facing outward in garment) to be against water for test a. initial b. after 20 washes # c. after ageing (70°C & 95% RH for 168 hrs) then flexing (at 20°C) <u>NOTE</u>: Tests #8 and #9 shall not use the same test specimens.	26.5 *[1] F 392 *[4] Flexing is carried out for one hour, or 2700 cycles (see para 7.3)		For all conditions: Average = 600 kPa	

TABLE I (continued)

Test	Property	Test Method	Requirement	Minimum Acceptable	Maximum Acceptable
9.	WATER RESISTANCE face (side to be facing outward in garment) to be against water for test a. initial b. after 20 washes # c. after ageing (70°C & 95% RH for 168 hrs) then flexing (at 20°C) NOTE: Tests #8 and #9 shall not use the same test specimens.	Maintain test conditions at 10 psi (68.95 kPa) for 10 minutes using the equipment required for Method 26.5 *[1] F 392 *[4] Flexing is carried out for one hour, or 2700 cycles (see para 7.3)	For all conditions: no leakage		
10.	ABRASION RESISTANCE (kPa) Face and Back are tested separately using new specimens	D 3886 *[4] (modified): The abradant is to be the same surface of the fabric under test (ie. face abraded by face, back abraded by back); specimens to be abraded for 10,000 cycles. Following abrasion test: 1. Hydrostatic Resistance Method 26.5 *[1] 2. Water Resistance using equipment for Method 26.5 *[1], 10 min/10psi (68.95 kPa)	Face: no leakage Back: no leakage	Face: average 600 kPa Back: average 600 kPa	
11.	MOISTURE VAPOUR PERMEABILITY resistance – mm equivalent still air (average) a. initial b. after ageing (70°C & 95% RH for 168 hrs) c. after 20 washes #	49-99 *[1] option 1 (4 specimens)			For all conditions: Average 19 mm
12.	STATIC DECAY Time to decay to 10% of applied charge a. initial b. after 20 washes #	5931 *[5] Test at 20°C & 20% RH face and back warp and weft charging to +5000V and –5000V Report: maximum voltage level reached, and results for each side tested (face and back) and each direction (warp and weft) of the fabric.	Fabric must charge to at least +4000V Face Warp, Face Weft, Back Warp, Back Weft Less than 0.5 seconds overall average time to decay for each face and each direction, no single measurement greater than 0.5 seconds.		

TABLE I (continued)

Test	Property	Test Method	Requirement	Minimum Acceptable	Maximum Acceptable
13.	ELECTRICAL RESISTIVITY - Surface (average ohms/square) a. initial b. after 20 washes #	76 *[6] concentric ring method Test at 20°C & 20% RH face and back	Face: 10^9 to 10^{12} Back: 10^5 to 10^9		Face: 10^{13}
14.	COLOUR FASTNESS TO LIGHT	16*[6] Option E	Sample Grey Scale 4 After 40 AATCC Fading Units		Sample Grey Scale 3 After 40 AATCC Fading Units
15.	COLOUR FASTNESS TO CROCKING Colour Change	22 *[1] Test 6.1 and 6.2			Wet & Dry: Grey Scale 3
16.	COLOUR FASTNESS TO LAUNDERING#	19.1 *[1] Test #2			Colour Change and Staining Grey Scale 3
17.	OIL REPELLENCY a. as received b. after 5 washes #	118 *[6]		 Rating 5 Rating 4	
18.	WATER REPELLENCY a. as received b. after 5 washes #	26.2 *[1]		 100 90	
19.	DELAMINATION After: a. colourfastness to laundering test, b. water resistance tests (initial) c. ageing, (70°C & 95% RH for 168 hrs) treatment d. ageing and flexing treatment e. 20 launderings (for static decay tests) f. each chemical treatment for chemical resistance tests	Visual evaluation View specimens under the conditions described in 46 *[1] and 47 *[1]	No Delamination		Delamination, as described in para 3.4.4.1, measuring less than 5 mm in any direction and greater than 75 mm apart is the maximum degree of delamination acceptable.
20.	RESISTANCE TO CHEMICALS (kPa) a. Jet fuel in accordance with CAN/CGSB-3.22 b. Degreasers, cleaning agent (methyl ethyl ketone 99.8% assay) c. Insect repellent (DEET) liquid in accordance with CAN/CGSB-15.19 (75%) d. Insect repellent (DEET) cream, 32%	See para 7.4 for chemical exposure test method. Following exposure test: 1. Hydrostatic Resistance Method 26.5 *[1] 2. Water Resistance using equipment for Method 26.5 *[1], 10 min/10psi (68.95 kPa)	 no leakage	 350 kPa	

TABLE I (continued)

Test	Property	Test Method	Requirement	Minimum Acceptable	Maximum Acceptable
21.	RESISTANCE TO FUNGAL GROWTH (%)	28.2 *[1]			10%
22	Colour Coordinates (CADPAT™)	Refer to paragraph 3.5.1.2 and 3.5.1.4			
23	Infra-red Reflectance (CADPAT™)	Refer to paragraph 3.5.1.3 and 3.5.1.4			

WASH TESTS ARE TO BE DONE IN ACCORDANCE WITH CAN/CGSB-4.2 No. 58, WASHING PROCEDURE III (50°C, Synthetic Detergent, Normal Agitation) AND DRYING PROCEDURE E (Tumble Dry, Normal Setting). <u>The last wash cycle is to be carried-out *without* detergent.</u>

Refer to para 7.5 for information regarding testing of multi-coloured specimens.

*[1] CAN/CGSB-4.2 Canadian General Standards Board Textile Test Methods
*[2] Transport Canada, Canadian Coast Guard TP1324 Material Specification for coated Fabrics Used in the Manufacture of Inflatable Life Rafts (February 1992)
*[3] i. Kawabata, S (1980) The Standardization and Analysis of Hand Evaluation (2nd Edition), Chapter IV Measurement of the Mechanical Properties of Fabrics, para 2.2 Bending property; and
ii. KES Kato Tech Co. Ltd, Manual for Tensile & Shear Tester, KES-FB-1
*[4] ASTM International - Textile Test Methods
*[5] FED-STD-191A Federal Test Method Standard, Textile Test Methods
*[6] American Association of Textile Chemists and Colorists - Technical Manual

TABLE II
TESTING REQUIREMENTS FOR TAPED SEAMS

NOTE: Due to the nature of these garments, it is essential that the seams be sealed with an appropriate tape that: is compatible with the shell fabric; does not decrease the static dissipative properties; ensures the waterproofness of the seams; is as durable as the garment; and that does not unduly increase the stiffness of the seams and/or garments. The same applies to seam joints and crossover points. Seams shall be tested and comply with the following table:

Test No.	Property	Test Method	Requirement
1.	HYDROSTATIC RESISTANCE (kPa) **a.** initial **b.** after 5 washes # Chemical Resistance: **c.** Jet fuel, in accordance with CAN/CGSB-3.22 **d.** Degreasers, cleaning agents (methyl ethyl ketone – 99.8% assay) **e.** Insect repellent (DEET) liquid in accordance with CAN/CGSB-15.19 (75%) **f.** Insect repellent (DEET) cream, 32%	26.5 * See para 7.4 for chemical exposure test method.	Conditions **a** and **b**: minimum 450 kPa Conditions **c** through **f** : minimum 350 kPa
2.	WATER RESISTANCE **a.** initial **b.** after 5 washes # Chemical Resistance: **c.** Jet fuel, in accordance with CAN/CGSB-3.22 **d.** Degreasers, cleaning agents (methyl ethyl ketone – 99.8% assay) **e.** Insect repellent (DEET) liquid in accordance with CAN/CGSB-15.19 (75%) **f.** Insect repellent (DEET) cream, 32%	Maintain test conditions at 10 psi (68.95 kPa) for 10 minutes using the equipment required for Method 26.5* See para 7.4 for chemical exposure test method.	For all conditions: no leakage
3.	PEEL STRENGTH (N/width of tape)	D 413 ** Machine method, Strip type A, 180° Peel	minimum 8 N/25 mm
4.	ELECTRICAL RESISTIVITY - Surface Resistivity, across the seam (ie. seam is centered in the apparatus) (average ohms/square) **a.** initial **b.** after 5 washes #	76 *[6] Concentric ring method test at 20°C & 20% RH inner knit face (back/lining) only	Back: 10^5 to 10^9
5.	DELAMINATION AFTER: **a.** 5 washes **b.** each chemical treatment for Chemical Resistance test (see para 7.4) **c.** water resistance tests (initial & after 5 washes)	Visual evaluation View specimens under the conditions described in 46 *[1] and 47 *[1]	No Delamination or separation of the tape from the seam, or of the individual layers of the seam tape from each other

WASH TESTS ARE TO BE DONE IN ACCORDANCE WITH CAN/CGSB-4.2 No. 58, WASHING PROCEDURE III (50°C, Synthetic Detergent, Normal Agitation) AND DRYING PROCEDURE E (Tumble Dry, Normal Setting). <u>The last wash cycle is to be carried-out *without* detergent.</u>

* CAN/CGSB-4.2 Canadian General Standards Board Textile Test Methods

** ASTM International - Textile Test Methods

TABLEAU I
EXIGENCES EN MATIÈRE D'ESSAIS DU TISSU FINI

Essai	Propriété	**Méthode d'essai**	**Exigence prescrite**	**Minimum acceptable**	**Maximum acceptable**
1.	MASSE (g/m^2)	5.1 *[1]	185 g/m^2	- Doit être suffisante pour respecter les exigences de confection du vêtement sans dépasser le maximum acceptable.	203 g/m^2
2.	ÉPAISSEUR (mm)	37 *[1] Pression de 1 kPa	0,4 mm		0,5 mm
3.	RÉSISTANCE À LA RUPTURE (N) après 5 lavages #	9.1 *[1] (bande de 50 mm)		Chaîne : 1000 N Trame : 650 N	
4.	RÉSISTANCE À LA DÉCHIRURE (N) après 5 lavages #	12.1 *[1]		Chaîne : 35 N Trame : 25 N	
5.	RÉSISTANCE AUX PERFORATIONS (N) après 5 lavages #	Par. 4.5 de TP 1324 *[2]		225 N	
6.	RIGIDITÉ ($gf.cm^2/cm$)	Voir par. 7.2 Système d'évaluation Kawabata *[3]: Propriété de pliage (B moyen) Sensibilité : 5x1 Largeur du spécimen: 10 cm	Longueur : 0,600 $gf.cm^2/cm$ Largeur : 0,300 $gf.cm^2/cm$	- Doit être suffisante pour respecter les exigences de confection du vêtement sans dépasser les valeurs maximales.	Longueur : 1,000 $gf.cm^2/cm$ Largeur : 0,500 $gf.cm^2/cm$
7.	STABILITÉ DIMENSIONNELLE (%) après 5 lavages #	67 *[1] Lavage selon la norme: 58*[1] III E (50º C, agitation normale; sécheuse à culbutage: réglage normal)			Chaîne : 5 % Trame : 5 %
8.	ESSAI DE PÉNÉTRATION D'EAU À HAUTE PRESSION (kPa) Endroit (face à l'extérieur du vêtement) doit être contre l'eau pendant l'essai a. état initial b. après 20 lavages # c. après vieillissement (70° C et 95 % HR pendant 168 h), puis flexion (à 20 °C) <u>NOTA</u> : Pour les essais 8 et 9, ne pas utiliser les mêmes spécimens.	26.5 *[1] F 392 *[4] Une flexion est exercée pendant une heure, soit 2 700 cycles (voir par. 7.3)		Toutes les conditions : Moyenne = 600 kPa	

TABLEAU I (suite)

Essai	Propriété	**Méthode d'essai**	**Exigence prescrite**	**Minimum acceptable**	**Maximum acceptable**
9.	RÉSISTANCE À L'EAU L'endroit (face à l'extérieur du vêtement), doit être contre l'eau pendant l'essai a. état initial b. après 20 lavages # c. Après l'essai de vieillissement (70 °C et 95 % HR pendant 168 h), puis celui de flexion (à 20 °C) NOTA. Pour les essais 8 et 9, ne pas utiliser les mêmes spécimens.	Conditions d'essai à 10 lb/po^2 (68,95 kPa) maintenues constantes pendant 10 min au moyen de l'équipement requis pour l'essai 26.5 *[1] F 392 *[4] L'essai de flexion dure une heure ou 2 700 cycles (voir par. 7.3)	Pour toutes les conditions : pas de fuite		
10.	RÉSISTANCE À L'ABRASION (kPa) L'endroit et l'envers doivent être soumis aux essais séparément avec de nouveaux spécimens.	D 3886 *[4] (modifié) : L'abrasif doit être la même surface que le tissu soumis à l'essai (c.-à-d. l'endroit subit l'abrasion par l'endroit, l'envers subit l'abrasion par l'envers); spécimens soumis à 10 000 cycles d'abrasion. Après l'essai d'abrasion : 1. Essai de pénétration d'eau à haute pression, méthode 26.5*[1] 2. Pour l'essai de résistance à l'eau, utiliser le même équipement que pour la méthode 26.5*[1], 10 min/10 lb/po² (68,95 kPa)	Endroit : Pas de fuite Envers : Pas de fuite	Endroit: moyenne 600 kPa Envers: moyenne 600 kPa	
11.	PERMÉABILITÉ À LA TRANSPIRATION résistance - mm équivalent air calme (moyenne) a. état initial b. après les essais de vieillissement (70 °C et 95 % HR pendant 168 h) c. après 20 lavages # NOTA. Pour les essais 8 et 9, ne pas utiliser les mêmes spécimens. #	49-99 *[1] option 1 (4 spécimens)			Toutes les conditions : Moyenne : 19 mm

TABLEAU I (suite)

Essai	Propriété	**Méthode d'essai**	**Exigence prescrite**	**Minimum acceptable**	**Maximum acceptable**
12.	DÉTÉRIORATION STATIQUE Temps de détérioration : 10 % de la charge appliquée c. état initial d. après 20 lavages#	5931 *5 Essai à 20 °C et 20 % HR Endroit et envers Chaîne et trame Charge de + 5000 V et de – 5000 V Rapport : Tension maximale atteinte, et résultats pour les deux faces (endroit et envers) et les deux sens (chaîne et trame) du tissu	Le tissu doit recevoir une charge d'au moins + 4000 V Chaîne (endroit), trame (endroit), chaîne (envers), trame (envers) Temps de détérioration moyen de 0,5 s pour les deux faces et les deux sens; pas de mesure supérieure à 0,5 s.		
13.	RÉSISTIVITÉ ÉLECTRIQUE - Surface (ohms/carré moyen) c. état initial d. après 20 lavages#	76 *6 Méthode de l'anneau concentrique Essai à 20 °C et 20 % HR Endroit et envers,	endroit : 10^9 à 10^{12} envers : 10^5 à 10^9		endroit : 10^{13}
14.	SOLIDITÉ DE LA COULEUR À LA LUMIÈRE	16*6 Option E	Échelle de gris 4 après 40 unités de décoloration AATCC		Échelle de gris 3, après 40 unités de décoloration AATCC
15.	SOLIDITÉ DE LA COULEUR AU FROTTEMENT Changement de couleur	22 *1 Essais 6.1 et 6.2			Mouillé et sec : Échelle gris 3
16.	SOLIDITÉ DE LA COULEUR AU LAVAGE#	19.1 *1 Essai 2			Pas de changement de couleur ni de tachage Échelle de gris 3
17.	OLÉOFUGATION a. à la réception b. après 5 lavages#	118 *6		Étalon : 5 Étalon : 4	
18.	DÉPERLANCE a. à la réception b. après 5 lavages#	26.2 *1		100 90	

TABLEAU 1 (suite)

Essai	Propriété	Méthode d'essai	Exigence prescrite	Minimum acceptable	Maximum acceptable
19.	DÉCOLLAGE Après : a. l'essai de solidité de la couleur au lavage b. les essais de résistance à l'eau (état initial) c. l'essai de vieillissement (70 °C et 95 % HR pendant 168 h) d. l'essai de vieillissement et de flexion e. 20 lavages (pour les essais de détérioration statique) f. chaque traitement chimique pour les essais de résistance aux substances chimiques	Évaluation visuelle Examen des spécimens selon les conditions décrites dans les méthodes 46 *[1] et 47 *[1]	Pas de décollage		Selon la définition de décollage en 3.4.4.1, degré maximal acceptable de décollage (moins de 5 mm dans les deux sens et espacement supérieur à 75 mm)
20.	RÉSISTANCE AUX SUBSTANCES CHIMIQUES (kPa) a. carburéacteur, selon la norme CAN/CGSB-3.22 b. dégraisseurs, agents de nettoyage (méthyléthylcétone à 99,8 %) c. insectifuge liquide (DEET), selon la norme CAN/CGSB-15.19 (75 %) d. insectifuge en crème (DEET), 32 %	Voir 7.4 pour la méthode d'essai de l'exposition aux substances chimiques. Après l'essai d'exposition : 1. Essai de pénétration d'eau à haute pression 26.5*[1] 2. Essai de résistance à l'eau en utilisant l'appareillage pour l'essai 26.5 *[1] pendant 10 min à 10 lb/po² (68,95 kPa)	Pas de fuite	350 kPa	
21.	RÉSISTANCE AUX MICRO-ORGANISMES (%)	28.2 *[1]			10 %
22	Coordonnées colorimétriques (DCamC^{MC})	Voir les paragraphes 3.5.1.2 et 3.5.1.4			
23	Réflectance dans l'infrarouge (DCamC^{MC})	Voir les paragraphes 3.5.1.3 et 3.5.1.4			

LES ESSAIS DE LAVAGE DOIVENT ÊTRES RÉALISÉS CONFORMÉMENT À LA NORME CAN/CGSB-4.2 n° 58, MÉTHODE DE LAVAGE III (50 °C, agitation mécanique modérée, détergent

synthétique) et MÉTHODE DE SÉCHAGE E (séchage en machine à tambour sans chaleur). Le dernier cycle de lavage doit être fait *sans* détergent.

Pour en savoir plus sur les essais des spécimens multicolores, voir le paragraphe 7.5.

*[1] CAN/CGSB-4.2 Méthodes pour épreuves textiles de l'Office des normes générales du Canada
*[2] Transports Canada (Garde côtière du Canada). TP1324, Spécification relative aux textiles revêtus utilisés dans la fabrication des embarcations de survie pneumatiques (février 1992)
*[3] i. Kawabata, S (1980) The Standardization and Analysis of Hand Evaluation (2nd Edition), Chapter IV Measurement of the Mechanical Properties of Fabrics, par., 2.2 Bending property
ii. KES Kato Tech Co. Ltd, Manual for Tensile & Shear Tester, KES-FB-1
*[4] ASTM International - Textile Test Methods
*[5] FED-STD-191A Federal Test Method Standard, Textile Test Methods
*[6] American Association of Textile Chemists and Colorists. Technical Manual

TABLE II
EXIGENCES D'ESSAI POUR LES COUTURES RENFORCÉES D'UN BIAIS

REMARQUE : En raison de la nature de ces vêtements, il est essentiel que les coutures soient renforcées avec un biais compatible avec le tissu extérieur qui ne diminue en rien les propriétés antistatiques, assure l'étanchéité des coutures, est aussi durable que le vêtement et n'augmente pas indûment la raideur des coutures ou du vêtement. La même remarque s'applique aux points de jonction des coutures et aux points d'entrelacement. Les coutures doivent être soumises aux essais selon le tableau suivant :

Essai	Propriété	Méthode d'essai	Exigence
1.	ESSAI DE PÉNÉTRATION D'EAU À HAUTE PRESSION, (kPa) a. état initial b. après 5 lavages # Résistance aux substances chimiques c. carburéacteur, selon la norme CAN/CGSB-3.22 d. dégraisseurs, agent de nettoyage (essai au méthyléthylcétone 99,8 %) e. insectifuge liquide (DEET), selon la norme CAN/CGSB-15.19 (75 %) f. insectifuge en crème (DEET), 32 %	26.5 * Méthode d'essai d'exposition aux substances chimiques, voir par. 7.4	Conditions **a** et **b**: Minimum : 450 kPa Conditions **c** à **f** : Minimum : 350 kPa
2.	RÉSISTANCE À L'EAU a. état initial b. après 5 lavages # Résistance aux substances chimiques c. carburéacteur, selon la norme CAN/CGSB-3.22 d. dégraisseurs, agent de nettoyage (essai au méthyléthylcétone 99,8 %) e. insectifuge liquide (DEET), selon la norme CAN/CGSB-15.19 (75 %) f. insectifuge en crème (DEET), 32 %	Maintenir les conditions d'essai à 10 psi (68,95 kPa) pendant 10 min au moyen de l'appareillage requis selon la méthode 26.5 * Méthode d'essai d'exposition aux substances chimiques, voir par. 7.4	Toutes les conditions : Pas de fuite
3.	RÉSISTANCE AU PELAGE (N/largeur du ruban)	D 413 ** Méthode mécanique, bande de type A, pelage à 180°	Minimum : 8 N/25 mm
4.	RÉSISTIVITÉ ÉLECTRIQUE. Résistivité en surface, en travers la couture (centrée dans l'appareil) (ohms/carré moyen) a. état initial b. après 5 lavages #	76 *[6] Méthode de l'anneau concentrique Essai à 20 °C et 20 % HR Tricot intérieur (envers doublure) seulement	Envers: 10^5 à 10^9
5.	DÉLAMINATION APRÈS a. 5 lavages b. Chaque traitement en vue de l'essai de résistance aux produits chimiques (voir par. 7.4) c. Les essais de résistance à l'eau (état initial et après 5 lavages)	Évaluation visuelle Voir les échantillons pour les conditions décrites en 46* et 47*[1]	Aucun décollage ni séparation du ruban par rapport aux coutures, ou entre les épaisseurs composant le ruban

LES ESSAIS DE LAVAGE DOIVENT ÊTRES RÉALISÉS CONFORMÉMENT À LA NORME CAN/CGSB-4.2 n° 58, MÉTHODE DE LAVAGE III (50 °C, agitation mécanique modérée, détergent synthétique) et MÉTHODE DE SÉCHAGE E (séchage en machine à tambour sans chaleur). <u>Le dernier cycle de lavage doit être fait *sans* détergent.</u>

* CAN/CGSB-4.2 Méthodes pour épreuves textiles de l'Office des normes générales du Canada

** ASTM International Textile Test Methods

NOTICE

This documentation has been reviewed by the technical authority and does not contain controlled goods. Disclosure notices and handling instructions originally received with the document shall continue to apply.

AVIS

Cette documentation a été révisée par l'autorité technique et ne contient pas de marchandises contrôlées. Les avis de divulgation et les instructions de manutention reçues originalement doivent continuer de s'appliquer.

SPECIFICATION FOR CLOTH, COATED, NYLON/POLYURETHANE, 235 G/M^2

SPÉCIFICATION POUR TISSU DE NYLON ENDUIT DE POLYURÉTHANE, 235 g/m²

1. SCOPE

1.1 Scope. This Manufacturing Data covers the requirements for cloth, nylon, polyurethane coated, 235 g/m^2. Its purpose is for manufacture of the shell for the fragmentation vest, garment reinforcement, and carrier bags.

1.2 Application: The information contained herein is Copyright to Her Majesty the Queen of Canada, as is its associated pattern. The term CADPAT™, with and without extensions, is a registered Trademark belonging to the Department of National Defence. Any of the data contained in this specification, and its associated pattern, may be used only for goods for Canada. The printed textile and any items made therefrom shall be for the sole end use of DND. There shall be no selling or offering for sale of goods incorporating the CADPAT™ pattern and colours to any person or entity other than Canada without the Minister's prior written authorization. Explicit in this is that any goods of not first quality produced shall not be released, sold, or offered for sale, directly or indirectly, to any person or corporation other than Canada without the Minister's prior written authorization.

1. PORTÉE

1.1 Portée. La présente spécification vise les exigences relatives au tissu de nylon enduit de polyuréthane, 235 g/m^2. Ce tissu est utilisé pour la fabrication du tissu extérieur des vestes pare-éclats, des renforts de vêtements et des sacs de transport.

1.2 Application. Les informations contenues dans le présent document, ainsi que le dessin associé, sont la propriété de Sa Majesté la Reine du Canada et protégés par droit d'auteur. Le terme DCamC^{MC}, avec ou sans extension, est une marque déposée, propriété du ministère de la Défense nationale. Les données contenues dans la présente spécification et le modèle associé ne peuvent être utilisés que pour des marchandises produites pour le Canada. Les tissus imprimés et tous les articles fabriqués dans ce tissu sont à l'usage final exclusif du MDN. Nul bien incorporant le motif et les couleurs du DCamC^{MC} ne peut être vendu ni offert à toute personne ou entité autre que le Canada sans l'autorisation préalable écrite du ministre. De façon explicite, tout bien qui n'est pas de première qualité ne peut être distribué, vendu ou offert en vente, directement ou indirectement, à toute personne physique ou morale autre que le Canada sans l'autorisation préalable écrite du ministre.

1.2.1 The information, data, know-how, formulas, algorithms, software, processes, systems, methods, designs, text, works, figures, tables, sketches, photographs, plans, drawings, specifications, samples, reports, names, inventions and/or ideas contained herein (hereinafter "Intellectual Property") is the exclusive property of Her majesty the Queen in Right of Canada as represented by the Minister of National Defence (hereinafter referred as "DND"). No one has the right to reproduce, disclose, disseminate, or utilize, in any manner or in any form, this Intellectual Property, or any part thereof, without the prior written consent of DND. For further information on the restrictions applicable to this Intellectual Property, or to request consent from DND, please contact the Design Authority, Director Soldier Systems Programme Management, or the Director of Intellectual Property, Department of National Defence, 101 Colonel By Dr., Ottawa, K1A 0K2, Canada.

1.2.1 Les informations, données, formules, algorithmes, logiciels, processus, systèmes, méthodes, dessins, ouvrages, figures, tableaux, croquis, photos, plans, dessins, spécifications, échantillons, rapports, noms, inventions ou idées, de même que le libellé ou le savoir-faire figurant aux présentes (ci-après désignés sous le nom collectif « propriété intellectuelle ») sont la propriété exclusive de Sa Majesté la Reine du Chef du Canada, représentée par le ministre de la Défense nationale (ci-après le « MDN »). Nul n'a le droit de reproduire, divulguer, diffuser ou utiliser, de quelque manière ou sous quelque forme que ce soit, cette propriété intellectuelle, en tout ou en partie, sans le consentement écrit préalable du MDN. Pour de plus amples informations sur les restrictions applicables à cette propriété intellectuelle, ou pour demander le consentement du MDN, veuillez contacter l'autorité responsable de la conception, Directeur – Administration du programme de l'équipement du soldat, ou le Directeur – Propriété intellectuelle, ministère de la Défense nationale, 101, promenade Colonel By, Ottawa, K1A 0K2, Canada.

1.3 Classification. The fabric shall be classified as follows:

Type I	Cloth, Nylon, Polyurethane Coated, 235 g/m^2, CADPAT™ (TW) NSN: 8305-20-002-4731
Type II	Cloth, Nylon, Polyurethane Coated, 235 g/m^2, CADPAT™ (AR) NSN: 8305-20-002-4733
Type III	Cloth, Nylon, Polyurethane Coated, 235 g/m^2, International Orange NSN: 8305-20-002-4734
Type IV	Cloth, Nylon, Polyurethane Coated, 235 g/m^2, Red

1.3 Classification. Le tissu doit être classé comme suit:

Type I	Tissu de nylon enduit de polyuréthane, 235 g/m^2, DCamC^{MC} (RBT) NNO: 8305-20-002-4731
Type II	Tissu de nylon enduit de polyuréthane, 235 g/m^2, DCamC^{MC} (RA) NNO: 8305-20-002-4733
Type III	Tissu de nylon enduit de polyuréthane, 235 g/m^2, orangé international NNO: 8305-20-002-4734
Type IV	Tissu de nylon enduit de polyuréthane, 235 g/m^2, rouge

2. APPLICABLE DOCUMENTS

2.1 Government Documents. The following publications form part of this Specification to the extent specified herein. The effective dates shall be those in effect on the date of the invitation to tender. Copies of this Specification may be obtained from the Department of National Defence, Ottawa, Ontario, Canada, K1A 0K2, Attention: DSSPM 2.

2. DOCUMENTS APPLICABLES

2.1 Documents du gouvernement. Les publications suivantes font partie intégrante de la présente spécification dans la mesure prescrite dans ce dernier. La version en vigueur doit être celle en vigueur à la date de l'appel d'offres. Des copies de la présente spécification peuvent être obtenues du ministère de la Défense nationale, Ottawa (Ontario), Canada K1A 0K2, à

l'attention de : DAPES 2.

SPECIFICATIONS

D-LM-008-002/SF-001 Specification for Marking for Storage and Shipment (Appendix 3)

DSSPM 2-2-80-500 Specification for CADPAT™ (TW) [Canadian Disruptive Pattern (Temperate Woodland)]

DSSPM 2-2-80-501 Specification for CADPAT™ (AR) [Canadian Disruptive Pattern (Arid Region)]

2.2 Other Publications. The following documents form part of this Specification to the extent specified herein. Effective dates shall be those in effect on the date of manufacture. Sources are as shown.

CAN/CGSB-4.2 Textile Test Methods
Canadian Government Standards Board
11 Laurier Street
Place du Portage, Phase III
Hull, Quebec, K1A 1G6
Phone: (819) 956-0425 or 1-800-665-CGSB (Canada only)
Fax: (819) 956-5644
Internet address: ncr.cgsb-ongc@pwgsc.gc.ca

FED-STD-101 Federal Standard Test Procedures for Packaging Materials
FED-STD-191 Federal Standard Textile Test Methods
General Services Administration
Specification Activity, Printed Materials Supply Division,
Building 197, Naval Weapons Plant,
Washington, D.C. 20407 USA

AATCC Technical Manual
American Association of Textile Chemists and Colorists (AATCC)
PO Box 12215
Research Triangle Park, North Carolina 27709
USA.

SPÉCIFICATIONS

D-LM-008-002/SF-001 Spécification visant le marquage pour l'entreposage et l'expédition (annexe 3)

DAPES 2-2-80-500 Spécification visant le DCamC^{MC} (RBT) [dessin de camouflage canadien (régions boisées tempérées)]

DAPES 2-2-80-501 Spécification visant le DCamC^{MC} (RA) [dessin de camouflage canadien (régions arides)]

2.2 Autres publications. Les documents suivants font partie intégrante de la présente spécification dans la mesure prescrite par cette dernière. La version en vigueur à la date de fabrication s'applique. La source de diffusion est celle qui est indiquée.

CAN/CGSB-4.2 Méthodes pour épreuves textiles
Office des normes générales du Canada
11, rue Laurier
Place du Portage, Phase III
Gatineau (Québec) K1A 1G6
Téléphone : 819-956-0425 ou 1 800-665-CGSB (Canada seulement)
Télécopieur : 819-956-5644
Courriel : ncr.cgsb-ongc@pwgsc.gc.ca

FED-STD-101 Federal Standard Test Procedures for Packaging Materials
FED-STD-191 Federal Standard Textile Test Methods
General Services Administration
Specification Activity, Printed Materials Supply Division
Building 197, Naval Weapons Plant
Washington, D.C. 20407
ÉTATS-UNIS

AATCC Technical Manual
American Association of Textile Chemists and Colorists (AATCC)
PO Box 12215
Research Triangle Park, North Carolina 27709
ÉTATS-UNIS

American Society for Testing and Materials (ASTM)
American Association for Testing and Materials (ASTM)
100 Barr Harbour Dr
West Conshohocken, PA 19428 USA

American Society for Testing and Materials (ASTM)
American Association for Testing and Materials (ASTM)
100 Barr Harbour Dr
West Conshohocken, PA 19428
ÉTATS-UNIS

ISO – International Standards Organization
Standards Council of Canada
350 Sparks Street, Suite 1200
Ottawa, ON K1P 6N7

ISO Organisation internationale de normalisation
Conseil canadien des normes
350, rue Sparks, pièce 1200
Ottawa (Ontario) K1P 6N7

2.3 Sealed Patterns. Sealed patterns are made available to the bidders and the contractor(s) as a guide to production. Sealed pattern numbers are:

DSSPM 259-04 Cloth, Nylon, Polyurethane Coated, 235 g/m^2 for construction and hand

DSSPM 259-01 CADPAT™ (TW) (Disruptive Pattern Temperate) for pattern, motif size, colour distribution, clarity and colour guidance

DSSPM 253-02 CADPAT™ (AR) (Disruptive Pattern Arid Region) for pattern, motif size, colour distribution, print quality, strike through, clarity, and uniformity of colour

DCGEM 263-78 Cloth, Nylon, Plain Weave, 5.75 oz/yd^2. For colour International Orange only

DSSPM 262-08 Cloth, Polyester/ Cotton, 50/50. For colour red only.

Under no circumstances are the Sealed Patterns to be mutilated or cut.

2.4 CADPAT™ . The technical requirement is defined in DSSPM 2-2-80-500 for Canadian Disruptive Pattern (Temperate Woodland), and DSSPM 2-2-80-501for Canadian Disruptive Pattern (Arid Region). These include requirements for colour and for Infra-red Reflection.

2.4.1 If information or clarification is required concerning the pattern, its colour or infra-red requirements other than that contained in the

2.3 Modèles réglementaires. Des modèles réglementaires sont mis à la disposition des soumissionnaires et des entrepreneurs comme guide pour la production. Voici les numéros des modèles réglementaires :

DSSPM 259-04 Tissu de nylon enduit de polyuréthane, 235 g/m² pour la confection et le fini

DSSPM 259-01 DCamC^{MC} (RBT) (dessin de camouflage, régions boisées tempérées) pour le dessin, la taille des motifs, la distribution des couleurs et le guide des couleurs

DSSPM 253-02 DCamC^{MC} (RA) (dessin de camouflage, régions arides) pour le dessin, la taille des motifs, la distribution des couleurs et le guide des couleurs

DCGEM 263-78 Orangé international : tissu de nylon, armure unie, 5,75 oz/v^2. Pour couleur orangé international seulement.

DSSPM 262-08 Tissu du polyester/coton, 50/50. Pour couleur rouge seulement.

En aucune circonstance, les modèles réglementaires ne doivent être endommagés ni coupés.

2.4 DCamC^{MC}. Les exigences techniques sont définies et énoncées dans les documents DAPES 2-2-80-500 visant le dessin de camouflage canadien (régions boisées tempérées) et DAPES 2-2-80-501 visant le dessin de camouflage canadien (régions arides). Ces exigences portent notamment sur la couleur et la réflectance dans l'infrarouge.

2.4.1 Pour obtenir de l'information ou des précisions sur le motif, sa couleur ou la réflectance dans l'infrarouge, autres que ce qui est contenu dans les documents

specification of DSSPM 2-2-80-500 or DSSPM 2-2-80-501, and sealed patterns, the Design Authority (see para 6.2.1) should be consulted through the Contracting Authority.

DAPES 2-2-80-500 ou DAPES 2-2-80-501 et les modèles réglementaires, on doit consulter l'autorité responsable de la conception (voir le paragraphe 6.2.1).

2.5 Order of Precedence

2.5.1 In the event of any inconsistency in contract documents such as contract, Specification and sealed patterns, the order of precedence shall be contract, Specification, and sealed pattern.

2.5.2 In the event of inconsistency within this specification, including inconsistency between official languages, the Design Authority shall be consulted for clarification.

2.5.3 Nothing in this document supersedes applicable laws and regulations, unless a specific exemption has been obtained.

2.5 Ordre de préséance.

2.5.1 En cas d'incohérence entre les documents contractuels, soit le contrat, la spécification et les modèles réglementaires, l'ordre de préséance est le suivant : le contrat, la spécification et les modèles réglementaires.

2.5.2 En cas d'incohérence dans l'énoncé de la spécification, y compris dans les détails techniques entre les deux langues officielles, il faut communiquer avec l'autorité responsable de la conception pour obtenir des précisions.

2.5.3 Aucun élément du présent document ne remplace les lois et règlements applicables, à moins qu'une exemption particulière n'ait été obtenue.

3. REQUIREMENTS

3.1 The materials covered by this Specification shall be free of imperfections or blemishes such as may adversely affect its appearance or serviceability. For inspection purposes, imperfections and blemishes shall be considered defects when clearly visible at a normal inspection distance of approximately one metre under good, preferably North Light, lighting conditions. No weaving or yarn defect shall be acceptable if the integrity of the coating is in question. Good commercial standard practices shall apply throughout.

3.2 Sealed Patterns. Sealed patterns, when furnished, shall constitute the standard only in regard to any properties not defined herein, and in association with any notes, which may be included on the reverse side of the sealed pattern tag. It is otherwise provided for guidance purposes.

3.3 Yarns. The yarns for both warp and weft of the base cloth shall be air textured continuous filament nylon 6.6, evenly spun. The yarn shall be 140 filament and 500 denier.

3. EXIGENCES

3.1 Le tissu visé par la présente spécification doit être exempt de défauts pouvant nuire à son aspect ou à sa tenue en service. Aux fins d'inspection, sont considérés comme défauts ceux qui sont clairement visibles à une distance d'inspection normale d'environ un mètre sous un bon éclairage, de préférence la lumière du nord. Aucun défaut dans le tissage ou les fils n'est acceptable si l'intégrité de l'enduit est en cause. Les bonnes pratiques commerciales usuelles doivent être constamment appliquées.

3.2 Modèles réglementaires. Les modèles réglementaires, quand ils sont fournis, doivent constituer la norme uniquement en ce qui concerne les propriétés qui ne sont pas définies aux présentes, compte tenu des notes qui peuvent figurer au verso de l'étiquette du modèle réglementaire. Les modèles réglementaires sont par ailleurs fournis à titre indicatif.

3.3 Fils. Les fils de chaîne et de trame du tissu de fond doivent être en nylon 6,6 type 440 à filaments continus texturés à l'air, filés de façon uniforme. Le fil doit contenir 140 filaments, et sa masse linéique nominale doit être de 500 deniers.

3.4 Fabric. The base cloth shall be plain woven from the yarn specified in para 3.3, and shall be of such construction that the requirements of Table II shall be met after coating and finishing and for delivery.

3.4 Tissu. Le tissu de fond doit être le tissu à armure unie fabriqué à partir des fils prescrits au paragraphe 3.3, et être fabriqué de telle sorte que les exigences du tableau II doivent être satisfaites après l'enduction et le fini et pour la livraison.

3.4.1 Base Cloth. The base cloth is to be thoroughly desized and scoured prior to being heat-set. The scoured cloth shall contain no impurity, which may adversely affect the coating process. Table I contains information concerning the base fabric construction.

3.4.1 Tissu de fond. Le tissu de fond doit être entièrement désencollé et lavé à fond avant d'être thermofixé. Le tissu lavé ne doit pas contenir d'impureté qui pourrait altérer le processus d'enduction. Le tableau I contient des informations relatives à la fabrication du tissu de fond.

3.5 Colour. Colour shall be as specified in the procurement documents. It may be required dyed or printed.

3.5 Couleur. La couleur doit être conforme aux prescriptions des documents contractuels. La couleur pourra être obtenue par teinture ou impression, selon les exigences.

3.5.1 When **dyed**, the colour shall be even throughout and shall conform to the colour requirements provided in contractual documents.

3.5.1 Si la couleur est obtenue par **teinture**, elle doit être uniforme et être conforme aux exigences relatives aux couleurs prescrites dans les documents contractuels.

3.5.2 When **printed**, unless otherwise specified in the contract, the print shall be a wet print, using dyes. The pattern and colours shall be as specified in the contract. For all of the CADPAT™ patterns, the visual colours, their colour co-ordinates, tolerances, measurement conditions, and Infra-red Reflection (IRR) requirements shall be as defined by the appropriate technical data at paras 2.3 and 2.4 and as required by contractual documents.

3.5.2 Si la couleur est obtenue par **impression**, sauf indication contraire dans le contrat, l'impression doit être faite au mouillé, en utilisant des colorants. Le motif et les couleurs doivent être conformes aux prescriptions du contrat. Pour tous les patrons DCamC^{MC}, les couleurs visuelles, leurs coordonnées colorimétriques, les tolérances, les conditions de mesure et les exigences relatives à la réflectance dans l'infrarouge (RIR) sont définies par les données techniques appropriées aux paragraphes 2.3 et 2.4 et par les exigences des documents contractuels.

3.5.2.1 In all circumstances, the print shall be clear, clean, with minimal overlap of one colour to the next, show no bleeding, have good dye penetration, and all colours shall be uniform throughout.

3.5.2.1 Dans tous les cas, l'impression doit être claire et nette, avec un minimum de chevauchement des couleurs voisines, sans dégorgement, avec une bonne pénétration des colorants, et toutes les couleurs doivent être uniformes sur l'ensemble du tissu.

3.6 Infra-red Reflection. These requirements must be met both when manufactured and after 5 laundering cycles when laundered in accordance with CAN/CGSB-4.2 Test Method 58 III E.

3.6 Réflectance dans l'infrarouge. Ces exigences doivent être respectées à la fabrication et après cinq cycles de blanchissage quand ceux-ci sont réalisés conformément à la norme CAN/CGSB-4.2, méthode d'essai 58, procédure III. E.

3.6.1 CADPAT™ (TW). The on-going Canadian requirement is to achieve the IRR performance values, ranging from 400 nm to 2000 nm (average green and black), or 730 nm to 2000 nm (light green and brown) as stated in DSSPM 2-2-80-500. Currently, emphasis is being placed in the compulsory regions (which extend

3.6.1 DCamC^{MC} (RBT). Selon les exigences canadiennes actuelles, on doit respecter les valeurs de rendement pour la RIR entre 400 et 2 000 nm (vert moyen et noir), ou entre 730 et 2 000 nm (vert pâle et brun), comme le prescrit le document DAPES 2-2-80-500. Actuellement, on met l'accent sur les zones

to 1350 nm for all colours except black, for which the entire curve forms the mandatory range). Every effort should be made to meet the required curves beyond 1350 nm.

obligatoires (jusqu'à 1 350 nm pour toutes les couleurs sauf le noir, pour lequel l'ensemble de la courbe représente la gamme obligatoire). On ne devrait ménager aucun effort pour respecter les courbes requises au-delà de 1 350 nm.

3.6.2 CADPAT™ (AR). The on-going Canadian requirement is to achieve the IRR performance values, ranging from 400 nm to 2000 nm as stated in DSSPM 2-2-80-501. Currently, emphasis is being placed in the compulsory regions, which are from 700 nm to 1450 nm. Every effort should be made to meet the requirements completely.

3.6.2 DCamC^{MC} (RA). Selon les exigences canadiennes actuelles, on doit respecter les valeurs de rendement pour la RIR entre 400 et 2 000 nm (vert moyen et noir), comme le prescrit le document DAPES 2-2-80-501. Actuellement, on met l'accent sur les zones obligatoires, qui vont de 700 à 1 450 nm. On ne devrait ménager aucun effort pour respecter ces exigences.

3.7 Coating. The woven and printed textile shall be further processed by the application of a coating to the backside only of the goods. The following processes will be acceptable provided that all requirements of this specification are met: calendar coating, cast coating, direct coating, roller coating, and transfer coating, or a combination of any of these processes. The polyurethane elastomer used shall be hydrolysis and mildew resistant. The polyurethane is to be unpigmented (colourless) unless otherwise specified in contract documents. The resultant coating shall be uniform, and free from bubbles, pinholes, thin spots, delamination, or any other coating defects.

3.7 Enduit. Les textiles tissés et imprimés doivent être traités par l'application d'un enduit sur l'envers seulement. Les procédés suivants seront acceptables pourvu que toutes les exigences de la présente spécification soient respectées : enduction par calandrage, enduction par couchage, enduction directe, enduction par laminage et enduction par transfert, ou une combinaison quelconque de ces procédés. L'élastomère de polyuréthane utilisé doit être résistant à l'hydrolyse et à la moisissure. Le polyuréthane doit être sans pigment (incolore), sauf indication contraire dans les documents contractuels. L'enduit qui en résulte doit être uniforme et exempt de bulles, de piqûres, d'endroits minces, de délaminage ou de tout autre défaut.

3.8 Finish. The coated, printed cloth shall be given a durable water repellent finish to comply with the requirements of Table II.

3.8 Fini. Le tissu imprimé et enduit de polyuréthane doit recevoir un traitement hydrofuge durable conforme aux exigences du tableau II.

3.9 Sealed Seams. Articles that will be made from this textile may have sewn seams that require sealing or taping. Therefore, any finish applied to either nylon fabric or polyurethane coating that will impair secure adhesion of sealant or sealing tape shall be avoided.

3.9 Coutures renforcées. Les articles qui seront fabriqués avec ce textile peuvent avoir des coutures qui doivent être collées ou recouvertes d'un biais. Par conséquent, on doit éviter d'utiliser tout fini appliqué au tissu de nylon ou à l'enduit de polyuréthane qui peut nuire à la bonne adhérence de l'adhésif ou du biais.

3.10 Selvedges. Selvedges are to be firm, straight, and not of such thickness as may lead to unacceptable build-up during laying up for end item cutting.

3.10 Lisières. Les lisières doivent être fermes, droites et pas trop épaisses afin d'éviter une accumulation excessive d'épaisseur sur les bords quand le tissu est posé à plat pour la coupe.

3.11 Hand. The hand, drape, and surface texture of the finished coated cloth are to match those of the applicable sealed pattern. These properties must be acceptable for the end item being procured.

3.11 Main. La main, le drapé et la texture de surface du tissu enduit fini doivent correspondre à ceux du modèle réglementaire. Ces propriétés doivent être acceptables pour les articles finaux qui sont achetés.

3.12 Length

3.12.1 For delivery to the Department of National Defence and unless otherwise specified in contractual documents, the cloth shall be delivered in pieces of approximately 50 metres with no more than two lengths per piece, the shorter of which shall be not less than 20 metres.

3.12.2 When made under contract to a Defence supplier and not for delivery direct to the Crown, para 3.11.1 above need not apply.

3.13 Width

3.13.1 For delivery to the Department of National Defence and unless otherwise specified in contractual documents, the cloth shall comply with Table II. Minimum width refers to usable width.

3.13.2 When made under contract to a Defence supplier and not for delivery direct to the Crown, para 3.12.1 above need not apply.

3.14 Piece Marking. Each piece shall have a label attached to the selvedge at one end. The label shall be made of linen or heavy cardboard, with a reinforced eyelet for attaching a tying cord, and shall be legibly marked with the following information:

a) Contractor's identification (name or CA number)
b) Contract Number
c) Gross length in metres, including allowance
d) Net length in metres
e) Piece number
f) Number of lengths per piece
g) Nomenclature/Classification (para 1.2)
h) Colour
j) NATO Stock Number
k) Date of manufacture

All of the above information is required when the goods are contracted for and being delivered directly to the Crown. When contracted by a third party with delivery not to the Crown, only a), e), g), h), j), and k) are mandatory. The other information must be readily available to the Crown and/or its contractor if required.

3.12 Longueur.

3.12.1 Sauf indication contraire dans les documents contractuels, le tissu doit être livré au ministère de la Défense nationale en pièces d'environ 50 m de longueur avec au plus deux longueurs par pièce, dont la plus courte ne doit pas être inférieure à 20 m.

3.12.2 Lorsque le tissu est fabriqué sous contrat pour un fournisseur du MDN et n'est pas livré directement au gouvernement, le paragraphe 3.12.1 ci-dessus ne s'applique pas.

3.13 Largeur.

3.13.1 Sauf indication contraire dans les documents contractuels, le tissu livré au ministère de la Défense nationale doit être conforme au tableau II. La largeur minimale désigne la largeur utile.

3.13.2 Lorsque le tissu est fabriqué sous contrat pour un fournisseur du MDN et n'est pas livré directement à la Couronne, le paragraphe 3.13.1 ci-dessus ne s'applique pas.

3.14 Marquage des pièces. Chaque pièce de tissu livrée doit porter, à une extrémité, une étiquette fixée à la lisière. L'étiquette doit être en toile de lin ou en carton fort et percée d'un œillet renforcé permettant d'attacher une ficelle; elle doit porter les indications suivantes en caractères lisibles :

a) Identification de l'entrepreneur (nom ou numéro CA)
b) Numéro du contrat
c) Longueur brute en mètres, y compris la réserve
d) Longueur nette en mètres
e) Numéro de la pièce
f) Nombre de longueurs par pièce
g) Nomenclature /classification (par. 1.2)
h) Couleur
j) Numéro de nomenclature OTAN
k) Date de fabrication

Tous les renseignements ci-dessus sont requis lorsque les marchandises sont obtenues par contrat et livrés directement au gouvernement. Lorsque les marchandises sont obtenues par contrat par une tierce partie sans être livrées au gouvernement, seuls les éléments a), e), g), h), j) et k) sont obligatoires. Les autres renseignements doivent être facilement accessibles pour le

gouvernement et/ou son entrepreneur, le cas échéant.

4. QUALITY CONTROL/INSPECTION

4.1 Unless otherwise specified in the contract or purchase order, the contractor is responsible for the performance of all inspections and tests as specified herein and to demonstrate that the materiel and services conform to the requirements specified in this Specification. Contractors may utilise their own or any other inspection facility acceptable to the Crown or its designated representative. Contractors may also utilise their own test facilities so long as Crown approval has been obtained in advance and the conditions stated in ISO quality and manufacturing publications are followed.

4.2 The Crown reserves the right to perform any of the inspections or tests specified herein, where such are deemed necessary to ensure the materiel and/or services submitted to the Crown for acceptance meet all requirements of the contract. This applies equally to materiel contracted for delivery directly to the Department of National Defence or as component parts to a supplier with a contract for products for Defence use.

4. CONTRÔLE DE LA QUALITÉ/INSPECTION

4.1 Sauf indication contraire dans le contrat ou les documents d'achat, l'entrepreneur est tenu d'effectuer les inspections et les essais mentionnées ci-après afin de démontrer que le matériel et les services sont conformes aux exigences énoncées dans la présente spécification. L'entrepreneur peut utiliser ses propres installations d'inspection ou avoir recours à toute autre installation jugée acceptable par le gouvernement ou son représentant désigné. L'entrepreneur peut également utiliser ses propres installations d'essai, pourvu qu'il ait obtenu à l'avance l'approbation du gouvernement et que les conditions décrites dans les normes ISO portant sur la confection et la qualité soient respectées.

4.2 Le gouvernement se réserve le droit d'effectuer toute vérification ou tout essai jugé nécessaire pour garantir que le matériel et/ou les services qui lui sont présentés pour acceptation sont conformes à toutes les exigences énoncées dans le contrat. Ceci s'applique également au matériel obtenu sous contrat pour être livré directement au ministère de la Défense nationale ou comme composants livrés à un fournisseur dans le cadre d'un contrat pour des produits à des fins militaires.

5. PACKAGING

5.1 Unless otherwise specified, packaging, packing, and marking of shipping containers shall be in accordance with the terms of the contract.

5. CONDITIONNEMENT

5.1 Sauf indication contraire, le conditionnement, l'emballage et le marquage des contenants d'expédition doivent être conformes aux modalités du contrat.

6. NOTES

6.1 Ordering data. Procurement documents should specify the following:

a) title, number and date of this Specification
b) NATO Stock number of required item
c) Nomenclature/Classification (para 1.2)
d) Pre-production requirements
e) Packaging, packing, and marking of shipping containers
f) The Design Authority
g) The Quality Assurance Authority

6. REMARQUES

6.1 Données de commande. Les documents d'achat doivent indiquer les points suivants :

a) Titre, numéro et date de la présente spécification
b) Numéro de nomenclature OTAN des articles requis
c) Nomenclature/classification (par. 1.2)
d) Exigences de présérie
e) Conditionnement, emballage et marquage des contenants d'expédition
f) Autorité responsable de la conception
g) Autorité responsable de l'assurance de la qualité

6.2 Definition of terms

6.2.1 Design Authority. The Design Authority is the Government agency responsible for the technical aspects of the design and for changes to the design. The Design Authority for this requirement is the Directorate of Soldier Systems Programme Management (DSSPM), Department of National Defence.

6.2.2 Quality Assurance Authority. The Quality Assurance Authority is the Government agency responsible for providing assurance the materiel and services supplied by the contractor are in accordance with the terms of the contract. The Quality Assurance Authority is the Directorate of Quality Assurance (DQA), Department of National Defence.

6.2.3 Sealed pattern. The sealed pattern is a duplicate of the master sealed pattern which is the Department of National Defence's authorized prototype of the item to be produced. Sealed patterns are available for the contractor to use as a *conceptual example for production*. Contractors should note that sealed patterns may not incorporate all the details cited in this Specification and the order of precedence prevails (see para 2.5).

6.2.4 Specification Copies. Copies of this Specification are available from the Department of National Defence, Directorate of Soldier Systems, Ottawa, Ontario, K1A 0K2, Attention: DSSPM 2-2/DSSPM 2-11.

6.3 The production of a product to this specification, or the evaluation of a product to this specification, may require the use of materials and/or equipment that could be hazardous. This specification does not purport to address all safety, health and environmental concerns, if any associated with its use. It is the responsibility of the user of this specification to establish appropriate safety, health and environmental practices and to determine the applicability of regulatory limitations prior to use.

6.2 Définition des termes.

6.2.1 Autorité responsable de la conception. L'autorité responsable de la conception est l'organisme gouvernemental chargé des aspects techniques de la conception et des modifications connexes. Dans le cas des articles visés par la présente spécification, il s'agit de la Direction, Administration du programme de l'équipement du soldat (DAPES).

6.2.2 Autorité responsable de l'assurance de la qualité. L'autorité responsable de l'assurance de la qualité est l'organisme gouvernemental chargé d'assurer que le matériel et les services fournis par l'entrepreneur satisfont aux modalités du contrat. L'autorité responsable de l'assurance de la qualité est la Direction de l'assurance de la qualité (DAQ) du ministère de la Défense nationale.

6.2.3 Modèle réglementaire. Copie exacte du modèle réglementaire type, qui est le prototype autorisé par le ministère de la Défense nationale pour l'article qui doit être fabriqué. Les modèles réglementaires sont mis à la disposition de l'entrepreneur comme *exemples conceptuels pour la production*. Les entrepreneurs devraient prendre note que les modèles réglementaires n'incorporent pas nécessairement tous les détails mentionnés dans la présente spécification et l'ordre de préséance mentionné au paragraphe 2.5 prévaut.

6.2.4 Copies de la spécification. Des copies de la présente spécification peuvent être obtenues auprès du ministère de la Défense nationale, Direction de l'administration du programme de l'équipement du soldat, Ottawa (Ontario), K1A 0K2, à l'attention de : DAPES 2-2/DAPES 2-11.

6.3 La fabrication ou l'évaluation d'un produit conformément à la présente spécification pourrait nécessiter l'utilisation de matériel ou d'équipement dangereux. La présente spécification n'a pas pour objet de traiter de toutes les préoccupations relatives à la santé, à la sécurité et à l'environnement liées à son utilisation. Il incombe à l'utilisateur de la spécification d'établir au préalable des méthodes appropriées qui tiennent compte des questions d'environnement, de santé et de sécurité, et de déterminer les restrictions réglementaires applicables.

TABLE I
Requirements for Base (Greige) Cloth
500 denier nylon

Test #	PROPERTY	TEST METHOD	SPECIFIED REQUIREMENTS	MINIMUM ACCEPTABLE	MAXIMUM ACCEPTABLE
1	Fibre content	14.3*	100% nylon 6,6 air textured filament		
2	Mass (g/m^2)	5.1*	190	180	200
3	Linear density of yarns (denier)	5.1*	500 warp and weft	490 warp and weft	515 warp and weft
4	Breaking Strength N	9.1*	warp: 2250 weft: 1450	warp: 2100 weft: 1400	
5	Tear Strength N	12.1*	warp: 120 weft: 100	warp: 110 weft: 90	
6	Woven Count yarns/cm	6*	warp: 19 weft: 14	warp: 18 weft: 13	warp: 21 weft: 16

* CAN/CGSB-4.2 Textile Test Methods

Note that the information in Table I is provided for guidance purposes. **ALL** requirements for the finished cloth as described by Table II must be met.

TABLE II
Requirements for Finished Coated Fabric, 500 denier nylon

Test #	PROPERTY	TEST METHOD	SPECIFIED REQUIREMENTS	MINIMUM ACCEPTABLE	MAXIMUM ACCEPTABLE
1	Mass - finished	5.1*	235 g/m^2		290 g/m^2
2	Width (cm) (excluding selvedge)	4.1*	152 cm	150 cm	154 cm
3	Woven Count (yarns per cm)	6*		warp: 18 weft: 13	warp: 21 weft: 16
4	Breaking Strength (N/2.54 cm)	9.1* (Test 6.1)	warp: 1100 N weft: 850 N	warp: 1000 N weft: 800 N	
5	Tear strength (N)	12.1*	warp: 100 N weft: 80 N	warp: 70 N weft: 50 N	
6	Puncture Resistance (N)	2065.1 **	525 N	475 N	
7	Coating Adhesion (N/25 mm)	D 751 ***** **See Note 1**		Warp: 40 Weft: 40	
8	Colour fastness to light - all colours	16***** (Option E)		Sample Grey Scale 4 after 20 AATCC fading units	
9	Colour fastness to crocking – each colour dry wet	116 ****	Colour change GS 5 Staining GS 5 Colour change GS 5 Staining GS 5		Colour change GS 4 Staining GS 4 Colour change GS 4 Staining GS 4
10	Colour fastness to laundering - all colours	19.1* Test 2	Colour change GS 5 Staining GS 5		Colour change GS 4 Staining GS 4
11	Colour fastness to perspiration – all colours	23*	Colour change GS 5 Staining GS 5		Colour change GS 4 Staining GS 4
12	Dimensional stability in laundering - after 3 washes **See Note 2**	24.2* or 58* Test III.E.3 (50^{0}C, normal agitation, tumble dry)			warp 2.5% weft 2%

Test #	PROPERTY	TEST METHOD	SPECIFIED REQUIREMENTS	MINIMUM ACCEPTABLE	MAXIMUM ACCEPTABLE
13	Stiffness ($gf.cm^2/cm$)	Kawabata Evaluation System Bending property (B Mean) Sensitivity: 5x1 Specimen width: 10cm **See Note 3**			Maximum for each direction: Length: 2.2 Width: 1.2 Sum of Length + Width, Max: 3.0
14	Resistance to abrasion Face Followed by Back Followed by	D3886 *****(modified): abradant is the face surface of the fabric under test. fabric face abraded for 10,000 cycles (using **NEW** set of the specimens) hydrostatic resistance, 26.3*/ISO 811*** fabric back abraded for 10,000 cycles (using **NEW** set of the specimens) hydrostatic resistance 26.3*/ISO811***		Face: 80 cm Back: 40 cm	
15	Water Repellency -after 3 washes **See Note 2**	26.2*/ ISO *** 4920:1981		90	
16	Oil Repellency - after 3 washes **See Note 2**	118 ****	Rating 4 for all colours	rating 3 for all colours	
17	Resistance to fungal growth	28.2*			10%
18	Blocking	5872 ******	No blocking		
19	Hydrostatic Resistance (cm) As received	26.3* / ISO *** 811 (60 cm/min)		200cm	
	After 3 washes **See Note 2**	58* III E		20 cm	
	After ageing (70°C & 95% RH for 24 hours)			100 cm	

Test #	PROPERTY	TEST METHOD	SPECIFIED REQUIREMENTS	MINIMUM ACCEPTABLE	MAXIMUM ACCEPTABLE
20	Chemical Resistance - degreasers, cleaning agent (methyl ethyl ketone 99.8% assay) -insect repellent (DEET) liquid in accordance with CAN/CGSB-15.19 (75%) - insect repellent (DEET) cream, 32% - turbine fuel in accordance with CAN/CGSB-3.23 - diesel fuel in accordance with CAN/CGSB-3.6 type A	**See Note 4** for chemical exposure test method. Following exposure test: Hydrostatic Resistance 26.3*/ISO *** 811		200 cm, no individual result less than 125 cm	
21	Gloss rating Of coating (unit) Cloth dry 20° angle 60° angle 85 ° angle	D523 *****	 <1.5 <1.5 <1.5		 2.0 2.0 2.0

* CAN/CGSB-4.2 Canadian General Standards Board Textile Test Methods
** FED-STD-101 Federal Standard Test Procedures for Packaging Materials
*** ISO International Standards Organization
**** AATCC American Association of Textile Chemists and Colorists Technical Manual
***** ASTM American Society for Testing and Materials
****** FED-STD-191 Textile Test Methods

Note 1: Adhesive "Loctite" 420, available from Acklands-Granger Inc., has been known to provide a good separation and consistent result.

For the purpose of this specification, 'separation' shall be interpreted as the separation of coating from substrate, between layers of coating, of the adhesive itself, or a combination of these. A satisfied separation may be either complete or partial, and the test result must be equal to or greater than the minimum requirement.

For the purpose of this specification, test shall be carried out by compressing the specimen with a 4.5 kg mass between two glass plates and curing specimens for one hour.

Note 2: Washing shall be carried out in accordance with CAN/CGSB-4.2 No. 58, washing procedure III (50^0C, synthetic detergent, normal agitation) and Drying procedure E (tumble dry, normal setting). **The last wash cycle is to be carried out *without* detergent.**

Note 3: The Kawabata bending test is to be carried out on NEW fabric. A new roll or bolt of fabric shall be submitted to the laboratory. The laboratory shall cut test specimens from fabric taken directly from the new roll or bolt. *It is imperative that the new fabric and the test specimens be handled as little as possible prior to conducting the Kawabata bending test*.

References for test procedure:

i. Kawabata, S (1980) The Standardisation and Analysis of Hand Evaluation (2nd Edition), Chapter IV. Measurement of the Mechanical Properties of Fabrics, para2.2 Bending property; and
ii. KES Kato Tech Co. Ltd, Manual for Tensile & Shear Tester, KES-FB-1

Note 4: Test Procedure for Chemical Resistance

1. Fabric samples of sufficient size and quantity to carry out the following tests will be prepared. Five new specimens from each sample shall be tested separately to each chemical. The chemicals shall be placed on the side of the fabric that is intended to be the outer face side.

2. For liquid chemicals, a quantity of 100 ml/m^2 of the test liquid shall be placed on the top of the test fabric and spread as evenly as possible over the whole surface using a plastic squeegee. As much as possible of the test fabric should be covered with chemical, but leaving a border of one (1) cm width uncontaminated. This should ensure that none of the applied chemical seeps outside the weight, after it is applied.

3. For the non-liquid cream, a quantity of 50 g/m^2 of the chemical shall be placed on the top of the test fabric and spread as evenly as possible over the whole surface using a plastic squeegee. A border of one (1) cm width shall be left uncontaminated.

4. The whole test area shall then be covered with a glass plate and weighted to a total pressure of 6.895 kPa (1 psi).

5. This weighted cover shall be left in place for two (2) hours.

6. The fabric shall then be submitted to hydrostatic resistance testing, and must comply with the requirements in Table II. All five (5) specimens must pass. **Note that the side of the fabric that was exposed to the chemical will be facing the water in testing.**

TABLEAU I
Exigences relatives au tissu de base (écru), nylon de 500 deniers

ESSAI n°	PROPRIÉTÉ	MÉTHODE D'ESSAI	EXIGENCE	MINIMUM ACCEPTABLE	MAXIMUM ACCEPTABLE
1	Teneur en fibres	14.3*	100 % nylon 6,6 Filament texturé à l'air		
2	Masse (g/m²)	5.1*	190	180	200
3	Masse linéique des fils (denier)	5.1*	500 Chaîne et trame	490 Chaîne et trame	515 Chaîne et trame
4	Résistance à la rupture (N)	9.1*	Chaîne : 2250 Trame : 1450	Chaîne : 2100 Trame : 1400	
5	Résistance au déchirement (N)	12.1*	Chaîne : 120 Trame : 100	Chaîne : 110 Trame : 90	
6	Contexture (fils/cm)	6*	Chaîne : 19 Trame : 14	Chaîne : 18 Trame : 13	Chaîne : 21 Trame : 16

* CAN/CGSB-4.2 Méthodes pour épreuves textiles

Veuillez prendre note que les informations du tableau I sont fournies à titre indicatif seulement. **TOUTES** les exigences relatives au tissu fini décrites dans le tableau II doivent être respectées.

TABLEAU II
Exigences relatives au tissu fini (enduit), nylon de 500 deniers

ESSAI n°	PROPRIÉTÉ	MÉTHODE D'ESSAI	EXIGENCE	MINIMUM ACCEPTABLE	MAXIMUM ACCEPTABLE
1	Masse - tissu fini	5.1*	235 g/m^2		290 g/m^2
2	Largeur (cm) (lisières non comprises)	4.1*	152 cm	150 cm	154 cm
3	Contexture (fils par cm)	6*		Chaîne : 18 Trame : 13	Chaîne : 21 Trame : 16
4	Résistance à la rupture (N/2,54 cm)	9.1* (Essai 6.1)	Chaîne : 1 100 N Trame : 850 N	Chaîne : 1 000 N Trame : 800 N	
5	Résistance au déchirement (N)	12.1*	Chaîne : 100 N Trame : 80 N	Chaîne : 70 N Trame : 50 N	
6	Résistance à la perforation (N)	2065.1 **	525 N	475 N	
7	Adhérence de l'enduit (N/25 mm)	D 751 ***** **Voir la note 1**		Chaîne : 40 Trame : 40	
8	Solidité de la couleur à la lumière – toutes les couleurs	18.3* /ISO *** 105-B02 :1994 (Essai 1)		Étalon L5 changement de couleur du spécimen échelle de gris 3	
9	Solidité de la couleur au frottement (dégorgement) (toutes les couleurs) sec mouillé	116 ****	Changement de couleur : échelle de gris 5 Tachage échelle de gris 5 Changement de couleur : échelle de gris 5 Tachage échelle de gris 5		Changement de couleur : échelle de gris 4 Tachage échelle de gris 4 Changement de couleur : échelle de gris 4 Tachage échelle de gris 4
10	Solidité de la couleur au lessivage – toutes les couleurs	19.1* Essai 2	Changement de couleur : échelle de gris 5 Tachage échelle de gris 5		Changement de couleur : échelle de gris 4 Tachage échelle de gris 4
11	Solidité de la couleur à la sueur – toutes les couleurs	23*	Changement de couleur : échelle de gris 5 Tachage échelle de gris 5		Changement de couleur : échelle de gris 4 Tachage

ESSAI n°	PROPRIÉTÉ	MÉTHODE D'ESSAI	EXIGENCE	MINIMUM ACCEPTABLE	MAXIMUM ACCEPTABLE
					échelle de gris 4
12	Stabilité dimensionnelle au blanchissage – après 3 lavages **Voir note 2**	24.2* or 58* Essai III.E.3 (50 °C, agitation normale, séchage par culbutage)			Chaîne : 2,5 % Trame : 2,0 %
13	Rigidité ($gf.cm^2/cm$)	Système d'évaluation de Kawabata Propriété de pliage (moyenne B) Sensibilité : 5 x 1 Largeur du spécimen : 10 cm **Voir note 1**			Maximum pour chaque direction : Longueur : 2,2 Largeur : 1,2 La somme de Longuer plus Largeur, Max: 3.0
14	Résistance à l'abrasion Endroit Suivi de Envers Suivi de	D3886 *****(modifiée) : L'abrasif est l'endroit du tissu soumis à l'essai. L'endroit est soumis à 10 000 cycles d'abrasion (avec une **NOUVELLE** série de spécimens) Essai de pénétration d'eau à haute pression 26.3*/ISO 811**** L'envers est soumis à 10 000 cycles d'abrasion (avec une **NOUVELLE** série de spécimens) Essai de pénétration d'eau à haute pression 26.3*/ISO 811***		Envers : 80 cm Endroit : 40 cm	
15	Déperlance -après 3 lavages **Voir note 2**	26.2*/ ISO *** 4920 :1981		90	
16	Oléofugation - après 3 lavages **Voir note 2**	118 ****	Étalon 4 pour toutes les couleurs	Étalon 3 pour toutes les couleurs	
17	Résistance aux micro-organismes	28.2*			10 %
18	Blocage	5872 ******	Pas de blocage		

ESSAI n°	PROPRIÉTÉ	MÉTHODE D'ESSAI	EXIGENCE	MINIMUM ACCEPTABLE	MAXIMUM ACCEPTABLE
19	Essai de pénétration d'eau à haute pression (cm) À la réception	26.3* / ISO *** 811 (60 cm/min)		200 cm	
	après 3 lavages **Voir note 4**	58* III E		20 cm	
	Après vieillissement (70 °C et 95 % HR pendant 24 heures)			100 cm	
20	Résistance aux substances chimiques - dégraisseurs, agent de nettoyage (essai au méthyléthylcétone 99,8 %) -insectifuge (DEET) liquide conformément à la norme CAN/CGSB-15.19, 75 % - insectifuge (DEET) en crème, 32 % - carburéacteur, conformément à la norme CAN/CGSB 3.23 - carburant diesel, conformément à norme CAN/CGSB 3.6, type A	**Voir note 3** pour la méthode d'essai de l'exposition aux subsistances chimiques. Après l'exposition : Essai de pénétration d'eau à haute pression 26.3*/ISO *** 811		200 cm aucun résultat individuel < 125 cm	
21	Cote de lustre de l'enduit (unité) Tissu sec Angle de 20° Angle de 60° Angle de 85°	D523 *****	 < 1,5 < 1,5 < 1,5		 2,0 2,0 2,0

* CAN/CGSB-4.2 Méthodes pour épreuves textiles
** FED-STD-101 Federal Standard Test Procedures for Packaging Materials
*** ISO Organisation internationale de normalisation
**** AATCC American Association of Textile Chemists and Colorists Technical Manual
***** ASTM American Society for Testing and Materials
****** FED-STD-191 Textile Test Methods

Note 1: L'adhésif « Loctite » 420, de la société Acklands-Granger Inc., est reconnu pour assurer une bonne séparation et donner des résultats uniformes.

Aux fins de la présente spécification, le terme « séparation » désigne la séparation de l'enduit par rapport au substrat, entre les couches d'enduit ou de l'adhésif lui-même, ou une combinaison de ces processus. Une séparation satisfaisante peut être totale ou partielle, et le résultat de l'essai doit être égal ou supérieur à l'exigence minimale.

Pour l'essai réalisé conformément à la présente spécification, le spécimen doit être placé sous une charge de 4,5 kg entre deux plaques de verre et on doit le laisser sécher pendant une heure.

Note 2: Le lavage doit être effectué conformément à la norme CAN/CGSB-4.2 n° 58, procédure de lavage III (50 °C, agitation mécanique modérée, détergent synthétique), et procédure de séchage E (séchage en machine à tambour sans chaleur). **Le dernier cycle de lavage doit être fait *sans* détergent**

Note 3: L'essai de flexion Kawabata doit être effectué sur du tissu NEUF. Un rouleau ou une pièce de tissu neuf doit être soumis au laboratoire. Le laboratoire doit couper les spécimens directement dans le tissu provenant d'un rouleau ou d'une pièce de tissu neuf. *Il est impératif que le tissu neuf et les spécimens soient manipulés le moins possible avant de procéder à l'essai de flexion Kawabata.*
Références pour la procédure d'essai :
i. Kawabata, S (1980) The Standardisation and Analysis of Hand Evaluation (2nd Edition), Chapter IV. Measurement of the Mechanical Properties of Fabrics, para2.2 Bending Propriété;
ii. KES Kato Tech Co. Ltd, Manual for Tensile & Shear Tester, KES-FB-1

Note 4: Procédure d'essai de résistance aux substances chimiques

1. On doit préparer un échantillon du tissu de dimensions et en quantité suffisantes pour réaliser les essais suivants. Cinq nouveaux spécimens provenant de chaque échantillon doivent faire l'objet d'un essai distinct pour chaque substance chimique. Les substances chimiques doivent être placées sur le côté du tissu qui est le côté extérieur selon le fabricant.

2. Pour les substances chimiques liquides, une quantité de 100 mL/m² du liquide d'essai doit être versée au haut du tissu testé et répartie aussi uniformément que possible sur toute la surface à l'aide d'une raclette en plastique. Une surface du tissu aussi grande que possible devrait être recouverte par la substance chimique, mais on doit laisser une lisière non contaminée de 1 cm de largeur. On s'assurera ainsi que la substance chimique ne suinte pas hors du tissu, une fois la pression appliquée.

3. Pour les crèmes non liquides, une quantité de 50 g/m² de la substance chimique doit être versée sur le dessus du tissu testé et répartie aussi uniformément que possible sur toute la surface à l'aide d'une raclette en plastique. On doit laisser une lisière non contaminée de 1 cm de largeur.

4. Toute la zone d'essai doit ensuite être recouverte d'une plaque de verre et comprimée sous une pression totale de 6,895 kPa (1 lb/po²).

5. Ce montage sous pression doit être laissé en place pour deux (2) heures.

6. Le tissu est ensuite soumis à des essais de pénétration d'eau à haute pression et doit satisfaire aux exigences du tableau II. Les cinq spécimens doivent réussir l'essai. **Veuillez prendre note que la face du tissu qui a été exposée aux substances chimiques doit être contre l'eau pendant l'essai.**

Supersedes all previous versions of /
Remplace les versions antérieures de
DSSPM 2-2-80-052 and / et
D-80-001-052/SF-001 (1989-09-27)

SPECIFICATION FOR CLOTH, TAFFETA, NYLON, 88 g/m^2 TYPE I and II

1. SCOPE

1.1 Scope. This specification covers the requirements for two types of Cloth, Taffeta, Nylon, 88 g/m^2.

1.2 Classification. The cloth shall be classified as follows:

Type I	Cloth, Taffeta, Nylon, 88 g/m^2 (Heat set and back calendered finish)
Type II	Cloth, Taffeta, Nylon, 88 g/m^2 (Heat set only)

2. APPLICABLE DOCUMENTS

2.1 Government documents. The following publications form part of this specification to the extent specified herein. The effective dates shall be those in effect on the date of the invitation to tender.

DSSPM 2-2-80-500	CADPAT™(TW) [Canadian Disruptive Pattern (Temperate Woodland)] Requirements for colour and infra-red reflection.

SPÉCIFICATION TAFFETAS DE NYLON, 88 g/m² TYPE I et II

1. PORTÉE

1.1 Portée. La présente spécification vise les exigences pour deux types de taffetas de nylon, 88 g/m².

1.2 Classification. Le tissu doit être classé comme suit:

Type I	Taffetas de nylon, 88 g/m² (thermofixé et envers fini par calandrage)
Type II	Taffetas de nylon, 88 g/m² (thermofixé seulement)

2. DOCUMENTS APPLICABLES

2.1 Documents du gouvernement. Les documents suivants font partie intégrante de la présente spécification dans la mesure prescrite par cette dernière. La version en vigueur des documents doit être celle à la date de publication de la présente invitation à soumissionner.

DSSPM 2-2-80-500	Spécification visant le DCamC^{MC} (RBT) [dessin de camouflage canadien (régions boisées tempérées)] Exigences relatives à la couleur et à la réflectance dans l'infrarouge.

DSSPM 2-2-80-501	CADPAT™ (AR) [Canadian Disruptive Pattern (Arid)] Requirements for colour and infra-red reflection.

2.2 Other Publications. The following documents form part of this specification to the extent specified herein. The effective date of the documents shall be those in effect on the date of manufacture. Sources are shown.

CAN/CGSB-4.2 Textile Test Methods
Canadian General Standards Board
Gatineau, QC
K1A 1G6
Telephone: 819-956-0425 or 1-800-665-2472
Email: ncr.cgsb-ongc@pwgsc.gc.ca
Website: http://www.pwgsc.gc.ca/cgsb/home/index-e.html

AATCC Textile Test Methods
American Association of Textile Chemists and Colorists
P.O. Box 12215
Research Triangle Park, NC
27709, USA
Telephone: 919-549-3526
Website: www.aatcc.org

ISO Textile Test Methods
Standards Council of Canada
270 Albert Street, Suite 200
Ottawa, ON
K1P 6N7
Telephone: 613-238-3222
Email: info@scc.ca
Website: www.scc.ca

2.3 Sealed Patterns.

DSSPM 281-01	Cloth, Twist, Nylon/Cotton, Lightweight, 170 g/m^2, Canadian Average Green For colour and IRR - Canadian Average Green.
DSSPM 259-01	Cloth, Twist, Nylon/Cotton, Lightweight, 170 g/m^2, CADPAT™ (TW) For colour and pattern - CADPAT™ (TW).

DSSPM 2-2-80-501	Spécification visant le DCamC^{MC} (RA) [dessin de camouflage canadien (régions arides)] Exigences relatives à la couleur et à la réflectance dans l'infrarouge.

2.2 Autres publications. Les publications suivantes font partie intégrante de la présente spécification selon les modalités indiquées ci-après. La version en vigueur à la date de fabrication s'applique. La source de diffusion est celle qui est indiquée.

CAN/CGSB-4.2 Méthodes pour épreuves textiles
Office des normes générales du Canada
Gatineau (Québec)
K1A 1G6
Téléphone: 819-9560-0425 ou 1 800-665-2472
Courriel: ncr.cgsb-ongc@pwgsc.gc.ca
Site Internet: http://www.tpsgc-pwgsc.gc.ca/cgsb/home/index-f.html

AATCC Textile Test Methods
American Association of Textile Chemists and Colorists
P.O. Box 12215
Research Triangle Park, NC 27709
ÉTATS-UNIS
Téléphone: 919-549-3526
Site Internet: www.aatcc.org

Normes de l'ISO pour les essais des textiles
Conseil canadien des normes
270, rue Albert, pièce 200
Ottawa (Ontario) K1P 6N7
Téléphone: 613-238-3222
Courriel: info@scc.ca
Site Internet: www.scc.ca

2.3 Modèles réglementaires.

DSSPM 281-01	Tissu léger en nylon/coton simple retors, 170 g/m², vert canadien moyen Pour la couleur et la RIR – vert canadien moyen.
DSSPM 259-01	Tissu léger en nylon/coton simple retors, 170 g/m², DCamC^{MC} (RBT)Pour la couleur et le motif – DCamC^{MC} (RBT).

DCGE 306-71	Cloth, Taffeta, Nylon, 88 g/m^2, Type I For finish only.	DCGE 306-71	Taffetas de nylon, 88 g/m², type I Pour le fini seulement.
DCGEM 290-73	Cloth, Taffeta, Nylon, 88 g/m^2, Type II For finish only.	DCGEM 290-73	Taffetas de nylon, 88 g/m², type II Pour le fini seulement.
DCGEM 268-89	Cloth, Taffeta, Nylon, 88 g/m^2, Type II For colour - Air Force Blue.	DCGEM 268-89	Taffetas de nylon, 88 g/m², type II Pour la couleur – bleu force aérienne.
DSSPM 253-02	Cloth, Twist, Nylon/Cotton, Lightweight, 170 g/m^2, CADPAT™ (AR) For colours, motif size, colour distribution, print quality, penetration, clarity.	DSSPM 253-02	Tissu léger en nylon/coton simple retors, 170 g/m², DCamC^{MC} (RA) Pour les couleurs, la taille des motifs, la distribution des couleurs, la qualité de l'impression, la pénétration, la clarté.

2.4 Order of precedence.

2.4.1 In the event of inconsistency between contract documents, such as contract, specification and Sealed Patterns, the order of precedence shall be contract, specification and Sealed Patterns.

2.4.2 In the event of a conflict between the text of this specification and the references cited herein, the text of this specification shall take precedence.

2.4.3 In the event of inconsistency within this specification, the Design Authority (DSSPM 2-2) shall be contacted for clarification.

2.4.4 For any inconsistency in technical details between languages, the language of the original document, which in this case is English, shall take precedence.

2.4.5 Nothing in this document supersedes applicable laws and regulations, unless a specific exemption has been obtained.

3. REQUIREMENTS

3.1 Sealed Pattern. A Sealed Pattern, when available, will be supplied to the successful bidder. Sealed Patterns shall constitute the standard only in regard to any properties not defined in this specification. Note, however, that the order of precedence prevails (paragraph 2.4). Under no circumstances shall Sealed Patterns be mutilated or cut and must be returned to the Crown.

2.4 Ordre de préséance.

2.4.1 En cas d'incohérence entre les documents contractuels, soit le contrat, la spécification et les modèles réglementaires, l'ordre de préséance est le suivant: le contrat, la spécification et les modèles réglementaires.

2.4.2 En cas de divergence entre les documents mentionnés aux présentes et le contenu de la présente spécification, cette dernière a préséance.

2.4.3 En cas d'incohérence dans l'énoncé de la spécification, il faut communiquer avec l'autorité responsable de la conception (DAPES 2-2) pour obtenir des précisions.

2.4.4 En cas d'incohérence dans les détails techniques, entre les deux langues, la langue du document d'origine, dans ce cas-ci l'anglais, a préséance.

2.4.5 Rien dans le présent document ne remplace les lois et règlements applicables, sauf si une exemption est expressément obtenue.

3. EXIGENCES

3.1 Modèle réglementaire. Un modèle réglementaire, lorsque disponible, doit être fourni au soumissionnaire retenu. Le modèle réglementaire doit constituer la norme uniquement en ce qui concerne les propriétés qui ne sont pas définies aux présentes. Nota – L'ordre de préséance (paragraphe 2.4) doit être respecté. Les modèles réglementaires doivent être renvoyés au gouvernement et ne doivent en aucun cas être endommagés ni coupés.

3.2 Workmanship. The material covered by this specification shall be free of imperfections or blemishes such as may adversely affect its appearance, quality or serviceability. For inspection purposes, imperfections and blemishes shall be considered defects when clearly visible at a normal inspection distance of approximately 1 metre under good, preferably North Light, lighting conditions.

3.3 Yarns. The yarns shall be continuous filament nylon in both warp and weft.

3.4 Fabric. The fabric shall be a plain weave. When tested in accordance with the applicable test methods, the finished fabric shall comply with the requirements specified in Table I.

3.5 Colour. Colour shall be as specified in the procurement documents. The colour required shall match the applicable Sealed Pattern or numerical colour co-ordinates, whichever is specified. All visual colour matching to Sealed Patterns shall be done in accordance with CAN/CGSB-4.2 No.41 Standard Light Sources for Colour Matching of Textiles. A colour match under North-sky daylight is the most important measurement. Metamerism shall be no greater than that exhibited by the Sealed Pattern.

3.5.1 CADPAT™ specifications. The technical requirement is defined and included in the applicable DSSPM specification, either DSSPM 2-2-80-500 for CADPAT™(TW) or DSSPM 2-2-80-501 for CADPAT™(AR). Note that there are colour measurement requirements for each of the 4 colours in the CADPAT™(TW) specification, and individual IRR requirements for Canadian Average Green and black, and that the IRR requirement for colours light green and brown are the same - the light green curve is specified for both colours. In addition, there are colour measurement requirements for each of the 3 colours in the CADPAT™(AR) specification, and individual IRR requirements for light sand, dark sand and brown.

3.5.1.1 For bidding purposes, the Sealed Pattern for Type I CADPAT™ (TW) printed cloth, DSSPM 259-01, is supplied as a full metre. Under no circumstances is the Sealed Pattern to be mutilated or cut.

3.2 Qualité d'exécution. Le tissu visé par la présente spécification doit être exempt de défauts pouvant nuire à son aspect, sa qualité ou à sa tenue en service. À des fins d'inspection, sont considérés comme défauts ceux qui sont clairement visibles à une distance d'inspection normale d'environ un mètre sous un bon éclairage, de préférence la lumière du nord.

3.3 Fils. Les fils doivent être faits de filaments de nylon, trame et chaîne.

3.4 Tissu. Le tissu doit être à armure unie. Lors des essais réalisés conformément aux méthodes d'essai applicables, le tissu fini doit être conforme aux exigences prescrites au tableau I.

3.5 Couleur. La couleur doit être telle qu'il est indiqué dans les documents d'achat. La couleur requise doit correspondre au modèle réglementaire applicable ou aux couleurs numériques coordonnées selon ce qui est précisé. Tout appariement des couleurs visuelles avec les modèles réglementaires doit être effectué conformément à la norme CAN/CGSB-4.2 n° 41, Sources normalisées de lumière pour l'appariement des couleurs des textiles. L'appariement des couleurs à la lumière diurne du nord est la mesure la plus importante. Le métamérisme ne doit pas être supérieur à celui qui est présenté par le modèle réglementaire.

3.5.1 Spécifications relatives au DCamC^MC^. L'exigence technique est définie et incluse dans la spécification DSSPM applicable, soit DSSPM 2-2-80-500 pour le DCamC^MC^ (RBT) ou DSSPM 2-2-80-501 pour le DCamC^MC^ (RA). Veuillez prendre note qu'il existe des exigences de mesure des couleurs pour chacune des quatre couleurs dans les spécifications visant le DCamC^MC^ (RBT) et des exigences individuelles pour la mesure de la RIR pour le vert canadien moyen et le noir, et que les exigences relatives à la RIR pour le vert pâle et le brun sont les mêmes – la courbe pour le vert pâle est précisée pour les deux couleurs. En outre, des mesures colorimétriques sont exigées pour chacune des trois couleurs de la spécification DCamC^MC^ (RA), et des exigences de mesure de la RIR pour les couleurs sable pâle, sable foncé et brun.

3.5.1.1 Aux fins de soumissionner, le modèle réglementaire pour le tissu imprimé DCamC^MC^ (RBT) de type I (DSSPM 259-01) est fourni comme mètre intégral. Les modèles types ne doivent en aucun cas être endommagés ni coupés.

3.5.2 Canadian Average Green. When the contracting documents specify the colour as Canadian Average Green, the fabric shall be dyed to a uniform shade throughout and must comply with the colour co-ordinates defined in Appendix I of this specification. The sample provided for colour reference is Sealed Pattern DSSPM 281-01 which may be used as a visual starting point however all co-ordinates stated in Appendix I of this specification must be met.

3.5.2.1 Infra-red reflectance. Infra-red reflectance is not a requirement unless otherwise specified in the contracting documents. When required by the contracting documents, the infra-red reflectance must meet the requirements stated in DSSPM 2-2-80-500, Specification for CADPAT™ (TW) and DSSPM 2-2-80-501, Specification for CADPAT™ (AR).

3.6 Finish.

Type I The finish shall be as depicted by Sealed Pattern DCGEM 306-71. The back of the fabric shall be given a calendered finish.

Type II The finish shall be as depicted by Sealed Pattern DCGEM 290-73. The fabric shall not be given a calendered finish.

3.7 Length. Unless otherwise specified, the cloth shall be delivered in lengths of approximately 100 metres with not more than two lengths per piece, the shorter of which shall be not less than 20 metres.

3.8 Piece marking. Each piece of cloth shall have a label attached to the selvedge at one end. The label shall be made of linen or heavy cardboard with a reinforced eyelet for attaching a tying cord. The label shall be legibly printed with the following information:

a) Contractor's identification
b) Gross length in metre (including allowance)
c) Net length in metres
d) Piece number
e) Number of lengths per piece
f) Nomenclature
g) Colour
h) Specification number
j) Month and year of contract
k) NATO Stock Number

3.5.2 Vert canadien moyen. Lorsque les documents contractuels prescrivent comme couleur le vert canadien moyen, le tissu doit être teint de manière uniforme et être conforme aux coordonnées colorimétriques définies à l'annexe I de la présente spécification. Le modèle fourni pour la référence couleur est le modèle réglementaire DAPES 281-01 qui peut être utilisé comme point de départ visuel; cependant, le tissu doit répondre à toutes les exigences pour les coordonnées colorimétriques prescrites à l'annexe I.

3.5.2.1 Réflectance dans l'infrarouge. La mesure de la réflectance dans l'infrarouge (RIR) n'est pas une exigence, sauf indication contraire dans les documents contractuels. Si les documents contractuels l'exigent, la RIR doit satisfaire aux exigences des documents DSSPM 2-2-80-500, Spécification visant le DCamC^MC (RBT), et DSSPM 2-2-80-501, Spécification visant le DCamC^MC (RA).

3.6 Fini.

Type I Le fini doit être conforme aux indications du modèle réglementaire DCGEM 306-71. L'envers du tissu doit être fini par calandrage.

Type II Le fini doit être conforme aux indications du modèle réglementaire DCGEM 290-73. L'envers du tissu ne doit pas être fini par calandrage.

3.7 Longueur. Sauf indication contraire dans les documents contractuels, le tissu doit être livré en longueurs d'environ 100 m avec au plus deux longueurs par pièce, dont la plus courte ne doit pas être inférieure à 20 m.

3.8 Marquage des pièces. Une étiquette doit être apposée sur la lisière à une extrémité de chaque pièce de tissu. L'étiquette doit être faite de toile de lin ou de carton fort et percée d'un œillet renforcé permettant d'attacher une ficelle; elle doit porter les indications suivantes en caractères lisibles:

a) Identification de l'entrepreneur
b) Longueur brute en mètres (y compris la réserve)
c) Longueur nette en mètres
d) Numéro de la pièce
e) Nombre de longueurs par pièce
f) Nomenclature
g) Couleur
h) Numéro de la spécification
j) Mois et année du contrat
k) Numéro de nomenclature OTAN

4. QUALITY CONTROL/INSPECTION

4.1 The contractor is responsible for the performance of all inspection requirements as specified herein. Contractors may utilize their own or any other inspection facility acceptable to the Government or its designated representative. The Government reserves the right to perform any of the inspections specified herein, where such inspections are deemed necessary to ensure material and services conform to prescribed requirements. The contractor is responsible for ensuring that all material or services submitted to the Government for acceptance comply with all requirements of the contract.

4. CONTRÔLE DE LA QUALITÉ/INSPECTION

4.1 Il incombe à l'entrepreneur d'effectuer toutes les inspections conformes aux exigences énoncées dans le présent document. L'entrepreneur peut utiliser ses propres installations d'inspection ou avoir recours à toute autre installation jugée acceptable par le gouvernement ou son représentant désigné. Le gouvernement se réserve le droit d'effectuer les inspections mentionnées dans la présente spécification, lorsqu'elles sont nécessaires pour garantir que le matériel et les services sont conformes aux exigences prescrites. L'entrepreneur doit s'assurer que le matériel et les services proposés au gouvernement sont conformes aux exigences du contrat.

5. PACKAGING

5.1 Packaging and packing. Unless otherwise specified, packaging, packing and delivery shall be in accordance with the terms of the contract.

5. CONDITIONNEMENT

5.1 Conditionnement et emballage. Le conditionnement, l'emballage, la livraison et le marquage des contenants d'expédition doivent être conformes aux modalités du contrat.

6. NOTES

6.1 Ordering data. Procurement documents should specify the following:

a) Title, number and date of this specification
b) Type of cloth required (see 1.2)
c) Colour required (see 3.5)
d) Packaging and marking of shipping containers (see 5.1)
e) The Design Authority

6.2 Design Authority. The Design Authority is the Government agency responsible for technical aspects of design and changes to design. Unless otherwise specified in the contract, the Design Authority is the Directorate of Soldier Systems Program Management, DSSPM.

6.3 Definition of terms.

6.3.1 Master Sealed Pattern. A Master Sealed Pattern is the authorized prototype of the item to be produced and is held only by the Government.

6. REMARQUES

6.1 Données de commande. Les documents d'achat doivent préciser :

a) Titre, numéro et date de la présente spécification
b) Type de tissu requis (voir 1.2)
c) Couleur requise (voir 3.5)
d) Conditionnement et marquage des contenants d'expédition (voir 5.1)
e) Autorité responsable de la conception

6.2 Autorité responsable de la conception. L'autorité responsable de la conception est l'organisme gouvernemental chargé des aspects techniques de la conception et des modifications connexes. Sauf indication contraire dans le contrat, il s'agit de la Direction – Administration du programme de l'équipement du soldat (DAPES).

6.3 Définition des termes.

6.3.1 Modèle réglementaire principal. Prototype autorisé de l'article qui doit être fabriqué et dont le gouvernement est le détenteur.

6.3.2 Sealed Pattern. A Sealed Pattern is a duplicate of the Master Sealed Pattern and is available to the manufacturer to be used as a guide in production.

6.3.2 Modèle réglementaire. Copie exacte du modèle réglementaire principal mis à la disposition du fabricant qui doit l'utiliser comme un guide.

6.4 The production of a product to this specification, or the evaluation of a product to this specification, may require the use of materials and/or equipment that could be hazardous. This specification does not purport to address all safety, health and environmental concerns, if any associated with its use. It is the responsibility of the user of this specification to establish appropriate safety, health and environmental practices and to determine the applicability of regulatory limitations prior to use.

6.4 La fabrication ou l'évaluation d'un produit conformément à la présente spécification pourrait nécessiter l'utilisation de matériel ou d'équipement dangereux. La présente spécification n'a pas pour objet de traiter de toutes les préoccupations relatives à la santé, à la sécurité et à l'environnement liées à son utilisation. Il incombe à l'utilisateur de la spécification d'établir au préalable des méthodes appropriées qui tiennent compte des questions d'environnement, de santé et de sécurité, et de déterminer les restrictions réglementaires applicables.

Table I - Finished Fabric

Property	Test Method*	Specified Requirement	Minimum Acceptable	Maximum Acceptable
Width (between selvedges)	4.1	152 cm	150 cm	155 cm
Fabric Count (yarns per cm)	6	Warp: 64 Weft: 34	Warp: 60 Weft: 32	
Mass	5.1	88 g/m^2	78 g/m^2	90 g/m^2
Breaking Strength	9.1 (Test 6.1)	Warp: 845 N Weft: 535 N	Warp: 735 N Weft: 465 N	
Dimensional Change in Laundering (after 5 washes)	Wash in accordance with: 6330** (2A) or (2B) & para 8.5, Procedure E Measure in accordance with: 675** paras 6 & 7.4			Warp: 3.0% Weft: 3.0%
Non-Fibrous Materials	15 (see Note 1 below)			2%
Colourfastness to Light	16*** (Option E)	Sample Grey Scale 4 after 40 AATCC fading units	Sample Grey Scale 4 after 20 AATCC fading units	
Colourfastness to Water	20	No change in colour and no staining: Grey Scale 5		No appreciable change in colour and no appreciable staining: Grey Scale 4
Colourfastness to Crocking	22 (Tests 6.1 & 6.2)	Colour change and staining: Wet: Grey Scale 5 Dry: Grey Scale 5		Colour change and staining: Wet: Grey Scale 4 Dry: Grey Scale 4
Colourfastness to Perspiration	23	No change in colour and no staining: Grey Scale 5		No appreciable change in colour and no appreciable staining: Grey Scale 4
Colourfastness to Dry Cleaning	29.1	No change in colour: Grey Scale 5		No appreciable change in colour: Grey Scale 4

* CAN/CGSB 4.2 Textile Test Methods
** ISO Textile Test Methods
*** AATCC Textile Test Methods

Note 1: CAN/CGSB-4.2 Method 15 paragraph 7.4, solvent extraction, one of petroleum ether, tetracholoroethylene or hexane shall be used. Also, omit paras 7.7 and 7.8.

Tableau I – Tissu fini

Propriété	Méthode d'essai	Exigence prescrite	Minimum acceptable	Maximum acceptable
Largeur (entre les lisières)	4.1	152 cm	150 cm	155 cm
Contexture (fils/cm)	6	Chaîne: 64 Trame: 34	Chaîne: 60 Trame: 32	
Masse	5.1	88 g/m²	78 g/m²	90 g/m²
Résistance à la rupture	9.1 (Essai 6.1)	Chaîne: 845 N Trame: 535 N	Chaîne: 735 N Trame: 465 N	
Stabilité dimensionnelle au blanchissage (après 5 lavages)	Laver conformément à: 6330** (2A) ou (2B) et par. 8.5, méthode E Mesurer conformément à: 675** par. 6 et 7.4			Chaîne: 3,0 % Trame: 3,0 %
Matières non fibreuses sur les textiles	15 (Voir la note 1 ci-dessous)			2 %
Solidité des teintures à la lumière	16*** (Option E)	Spécimen Échelle des gris 4 après 40 unités de décoloration de l'AATCC	Spécimen Échelle des gris 4 après 20 unités de décoloration de l'AATCC	
Solidité de la couleur à l'eau	20	Pas de changement de couleur ni de tachage: Échelles des gris 5		Pas de changement de couleur ni de tachage appréciable: Échelles des gris 4
Solidité de la couleur au frottement (dégorgement)	22 (Essais 6.1 et 6.2)	Changement de couleur et tachage: Mouillé: Échelle des gris 5 Sec: Échelle des gris 5		Changement de couleur et tachage: Mouillé: Échelle des gris 4 Sec: Échelle des gris 4
Solidité de la couleur à la sueur	23	Pas de changement de couleur ni de tachage: Échelle des gris 5		Pas de changement de couleur ni de tachage appréciable: Échelle des gris 4
Solidité de la couleur au nettoyage à sec	29.1	Pas de changement de couleur: Échelle des gris 5		Pas de changement de couleur appréciable: Échelle des gris 4

* CAN/CGSB 4.2 Méthodes pour épreuves textiles
** Normes ISO sur les essais de textiles
*** AATCC Textile Test Methods

Note 1 : CAN/CGSB-4.2, par. 7.4, Méthode 15, Élimination de matières non fibreuses par solvant. Un éther de pétrole, le tétracholoroéthylène ou l'hexane, doit être utilisé. Omettre les paragraphes 7.7 et 7.8.

APPENDIX I

REQUIREMENTS FOR CANADIAN AVERAGE GREEN FOR COLOUR AND INFRA-RED REFLECTION

1. Colour requirements and IRR requirements are found on the following pages.

2. All measurements are to be made in accordance with CIE publication 15.2 and ASTM E308-99 using CIE Illuminant C and a 2 degree observer, specular component included. Sample preparation for chromaticity and IRR measurements shall be in accordance with AATCC Instrumental Measurement Procedure #6, A1.3, non-opaque samples.

3. Tolerance is plus/minus 2 CIE LAB units for each co-ordinate (L*a*b*).

4. Gloss values shall be less than 1 unit.

5. Infra-red values shall lie between the proscribed plus/minus standard deviation (SD) and are to be applied to the substrate as follows:

Canadian Average Green - as specified (average reflectance)

6. The on-going Canadian requirement is for IRR values ranging from 400nm to 2000nm as shown in the following pages. Currently compliance is mandatory from 400nm to 1300nm. Every effort should be made to meet the required curves beyond 1300nm, however compliance is not mandatory at this time.

ANNEXE I

EXIGENCES RELATIVES À LA COULEUR ET À LA RÉFLECTANCE DANS L'INFRAROUGE POUR LE VERT CANADIEN MOYEN

1. Les exigences pour la couleur et la RIR sont présentées dans les pages suivantes.

2. Toutes les mesures doivent être effectuées conformément aux publications CIE 15.2 et ASTM E308.99 à l'aide de l'illuminant C et de l'observateur à 2° de la CIE, composante spéculaire incluse. La préparation des échantillons pour les mesures de couleur et de RIR doit être réalisée conformément à la procédure de mesure instrumentale n° 6 de l'American Association of Textile Chemists and Colorists (AATCC), A1.3, pour des échantillons non opaques.

3. La tolérance est de ± 2 unités CIE LAB pour chaque coordonnée (valeurs L*a*b*).

4. Les valeurs de lustre doivent être inférieures à une (1) unité.

5. Les valeurs dans l'infrarouge doivent être comprises en deçà de l'écart type indiqué (±) et être appliquées au substrat comme suit:

Vert canadien moyen – selon ce qui est indiqué (réflectance moyenne)

6. Selon les exigences canadiennes actuelles, on doit respecter les valeurs RIR entre 400 et 2 000 nm, comme il est indiqué dans les pages suivantes. Actuellement, la plage obligatoire va de 400 à 1 300 nm. On ne devrait ménager aucun effort pour respecter les courbes requises au-delà de 1 300 nm; toutefois, cette exigence n'est pas obligatoire pour le moment.

Colour Requirements:
Canadian Average Green (single colour fabric)

Exigences relatives aux colours:
Vert canadien moyen (tissue de même couleur)

SPECIFICATIONS / *SPÉCIFICATIONS*	x	0,3600
	y	0,4098
CIE 1931/CIE LAB 1976	Y%	5,24
ILLUMINANT C, 2 deg.	DW.nm	569,36
specular component included /	S%	38,50
composante spéculaire incluse	L*	27,41
	a*	-6,78
	b*	16,46

Wavelength *Longueur d'onde*	Reflection *Réflexion*	ST.DEV. *Écart type*	Refl. Min *Réfl. Max.*	Refl. Max *Réfl. Max.*		Wavelength *Longueur d'onde*	Reflection *Réflexion*	ST.DEV. *Écart type*	Refl. Min *Réfl. Min.*	Refl. Max *Réfl. Max.*
%	%	%	%	%		%	%	%	%	%
400	1,89	0,77	1,12	2,67		840	42,14	14,80	27,35	56,94
410	1,95	0,85	1,10	2,79		850	42,50	14,90	27,60	57,39
420	2,00	0,93	1,07	2,93		860	42,85	15,00	27,85	57,85
430	2,11	1,04	1,07	3,16		870	43,20	15,11	28,09	58,31
440	2,26	1,17	1,09	3,43		880	43,20	15,05	28,15	58,24
450	2,39	1,28	1,11	3,67		890	43,16	14,99	28,16	58,15
460	2,46	1,33	1,14	3,79		900	43,11	14,94	28,17	58,06
470	2,53	1,37	1,16	3,90		910	43,07	14,90	28,17	57,97
480	2,62	1,43	1,19	4,05		920	43,03	14,86	28,18	57,89
490	2,72	1,50	1,22	4,22		930	43,00	14,82	28,18	57,82
500	2,95	1,63	1,32	4,58		940	42,82	14,76	28,06	57,58
510	3,70	2,02	1,68	5,72		950	42,64	14,70	27,94	57,33
520	4,45	2,44	2,01	6,88		960	42,45	14,64	27,81	57,09
530	5,24	2,84	2,40	8,09		970	42,28	14,60	27,68	56,87
540	6,05	3,26	2,79	9,31		980	42,09	14,56	27,53	56,64
550	6,65	3,59	3,06	10,24		990	41,91	14,52	27,39	56,44
560	6,41	3,53	2,88	9,94		1000	42,56	14,65	27,91	57,20
570	6,17	3,49	2,68	9,65		1010	43,21	14,77	28,43	57,98
580	5,84	3,36	2,48	9,20		1020	43,85	14,90	28,95	58,76
590	5,47	3,22	2,26	8,69		1030	44,45	15,04	29,41	59,49
600	5,14	3,08	2,05	8,22		1040	45,15	15,18	29,97	60,33
610	4,86	2,97	1,89	7,84		1050	45,51	15,22	30,30	60,73
620	4,60	2,88	1,72	7,48		1060	45,59	15,15	30,43	60,74
630	4,39	2,78	1,61	7,16		1070	45,66	15,09	30,56	60,75
640	4,19	2,67	1,52	6,87		1080	45,73	15,04	30,69	60,76
650	3,96	2,54	1,42	6,50		1090	45,81	14,99	30,82	60,79
660	3,65	2,33	1,32	5,98		1100	45,88	14,94	30,94	60,81
670	3,34	2,13	1,21	5,47		1110	44,88	14,74	30,14	59,61
680	4,52	2,71	1,81	7,23		1120	43,87	14,55	29,32	58,42
690	5,87	3,42	2,45	9,30		1130	42,87	14,39	28,48	57,25
700	8,94	4,60	4,34	13,54		1140	41,87	14,24	27,63	56,10
710	14,61	6,69	7,92	21,30		1150	40,86	14,11	26,76	54,97
720	20,27	8,94	11,33	29,21		1160	39,87	14,00	25,87	53,88
730	26,37	10,48	15,89	36,86		1170	38,72	13,46	25,26	52,18
740	32,48	12,31	20,17	44,78		1180	37,49	13,01	24,49	50,50
750	35,95	13,20	22,75	49,15		1190	36,27	12,66	23,61	48,93
760	36,58	13,40	23,18	49,99		1200	35,04	12,43	22,61	47,47
770	37,52	13,62	23,91	51,14		1210	36,48	12,40	24,08	48,88
780	38,46	13,84	24,62	52,29		1220	36,68	12,37	24,31	49,05
790	39,40	14,06	25,34	53,46		1230	36,87	12,35	24,53	49,22
800	40,33	14,29	26,04	54,62		1240	37,07	12,33	24,75	49,40
810	41,28	14,53	26,75	55,81		1250	37,26	12,30	24,96	49,57
820	41,44	14,60	26,83	56,04		1260	37,46	12,28	25,18	49,75
830	41,79	14,70	27,09	56,49		1270	37,65	12,27	25,39	49,92

Wavelength *Longueur d'onde*	Reflection *Réflexion*	ST.DEV. *Écart type*	Refl. Min *Réfl. Max.*	Refl. Max *Réfl. Max.*		Wavelength *Longueur d'onde*	Reflection *Réflexion*	ST.DEV. *Écart type*	Refl. Min *Réfl. Min.*	Refl. Max *Réfl. Max.*
1280	37,85	12,25	25,60	50,10		1720	17,30	7,49	9,81	24,79
1290	38,05	12,24	25,81	50,28		1730	17,11	7,45	9,66	24,56
1300	37,40	12,05	25,36	49,45		1740	16,92	7,42	9,50	24,34
1310	36,75	11,87	24,88	48,62		1750	16,72	7,34	9,38	24,07
1320	36,10	11,71	24,39	47,81		1760	16,52	7,26	9,26	23,79
1330	35,45	11,57	23,88	47,01		1770	16,33	7,18	9,14	23,51
1340	34,80	11,44	23,36	46,23		1780	16,12	7,11	9,02	23,23
1350	34,15	11,32	22,83	45,47		1790	15,92	7,03	8,89	22,96
1360	31,04	10,44	20,61	41,48		1800	15,72	6,96	8,76	22,68
1370	27,94	9,55	18,39	37,49		1810	14,93	6,63	8,30	21,55
1380	24,83	8,66	16,17	33,50		1820	14,13	6,29	7,85	20,42
1390	21,73	7,78	13,95	29,50		1830	13,34	5,95	7,39	19,29
1400	18,62	6,89	11,73	25,51		1840	12,55	5,62	6,93	18,16
1410	15,52	6,00	9,51	21,52		1850	11,75	5,28	6,47	17,03
1420	12,41	5,12	7,29	17,53		1860	10,96	4,94	6,01	15,90
1430	11,67	4,90	6,76	16,57		1870	10,16	4,61	5,56	14,77
1440	10,93	4,70	6,23	15,63		1880	9,37	4,27	5,10	13,64
1450	10,19	4,52	5,67	14,71		1890	8,57	3,94	4,64	12,51
1460	9,46	4,35	5,10	13,81		1900	7,78	3,60	4,18	11,38
1470	9,85	4,52	5,33	14,37		1910	6,99	3,26	3,72	10,25
1480	10,26	4,69	5,56	14,95		1920	6,19	2,93	3,26	9,12
1490	10,66	4,87	5,79	15,53		1930	5,65	2,58	3,07	8,23
1500	11,06	5,05	6,01	16,11		1940	5,32	2,41	2,91	7,73
1510	11,46	5,24	6,22	16,70		1950	4,99	2,28	2,71	7,26
1520	11,86	5,42	6,44	17,29		1960	4,67	2,19	2,48	6,86
1530	12,27	5,61	6,66	17,88		1970	4,33	2,16	2,18	6,49
1540	12,98	5,83	7,16	18,81		1980	4,48	2,21	2,27	6,69
1550	13,69	6,10	7,59	19,79		1990	4,63	2,27	2,36	6,90
1560	14,41	6,42	7,99	20,82		2000	4,79	2,33	2,46	7,12
1570	15,12	6,78	8,34	21,89						
1580	15,83	7,17	8,66	23,00						
1590	16,55	7,60	8,95	24,15						
1600	17,26	8,05	9,21	25,31						
1610	17,40	7,86	9,54	25,26						
1620	17,54	7,72	9,82	25,25						
1630	17,67	7,61	10,06	25,29						
1640	17,82	7,56	10,26	25,38						
1650	17,96	7,55	10,40	25,51						
1660	18,09	7,59	10,49	25,68						
1670	18,23	7,68	10,55	25,92						
1680	18,04	7,64	10,40	25,69						
1690	17,85	7,60	10,25	25,45						
1700	17,67	7,56	10,11	25,23						
1710	17,49	7,52	9,96	25,01						

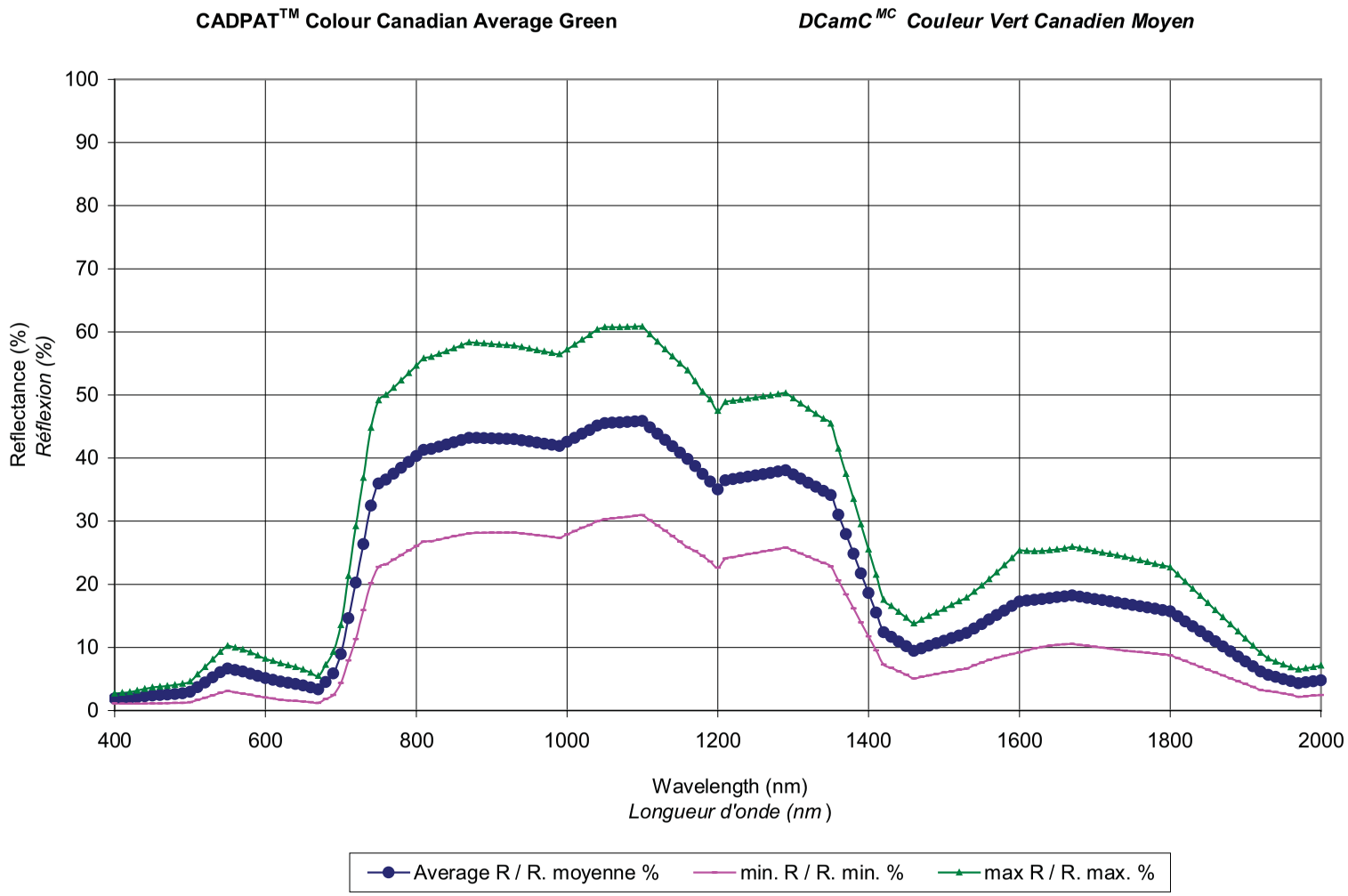

NOTICE

This documentation has been reviewed by the technical authority and does not contain controlled goods. Disclosure notices and handling instructions originally received with the document shall continue to apply.

AVIS

Cette documentation a été révisée par l'autorité technique et ne contient pas de marchandises contrôlées. Les avis de divulgation et les instructions de manutention reçues originalement doivent continuer de s'appliquer.

SPECIFICATION

FOR

CADPAT™ (TW)

[CANADIAN DISRUPTIVE PATTERN

(TEMPERATE WOODLAND)]

SPÉCIFICATION

DCamC^{MC} (RBT)

[DESSIN DE CAMOUFLAGE CANADIEN,

(RÉGIONS BOISÉES TEMPÉRÉES)]

1. SCOPE

1.1 Scope. This specification covers the technical performance requirements for both colour and Infra-red Reflectance for CADPAT™ (TW), Canadian Disruptive Pattern Temperate Woodland. It is intended for use, when specified, for all textiles used by the Canadian Forces for operational clothing and personal equipment. Any allowed deviations from the requirements stated herein shall be clearly defined in procurement documents.

1.2 The information contained herein is Copyright to Her Majesty the Queen of Canada, as is its associated pattern. The term CADPAT™, with and without extensions, is a registered Trademark belonging to the Department of National Defence. Any of the data contained in this specification, and its associated pattern, may be used only for goods for Canada. The printed textile and any items made therefrom shall be for the sole end use of DND. There shall be no selling or offering for sale of goods incorporating the CADPAT™ pattern and colours to any person or entity other than Canada

1. PORTÉE

1.1 Portée. La présente spécification vise les exigences de rendement technique relatives à la couleur et à la réflectance dans l'infrarouge du dessin de camouflage canadien, régions boisées tempérées [DCamC^{MC} (RBT)]. Elle est destinée à être utilisée, lorsque cela est prescrit, pour tous les tissus employés par les Forces canadiennes dans la confection des vêtements opérationnels et de l'équipement individuel. Tous les écarts autorisés par rapport aux exigences énoncées dans le présent document doivent être clairement définis dans les documents d'achat.

1.2 L'information contenue dans le présent document, ainsi que le modèle associé, sont la propriété de Sa Majesté la Reine du Canada et protégés par droit d'auteur. Le terme DCamC^{MC}, avec ou sans extension, est une marque déposée, propriété du ministère de la Défense nationale. Les données contenues dans la présente spécification et le modèle associé ne peuvent être utilisés que pour des marchandises produites pour le Canada. Les tissus imprimés et tous les articles fabriqués dans ce tissu sont à l'usage final exclusif du MDN. Nul bien incorporant le motif et les couleurs du DCamC^{MC} ne peut être vendu ni offert à toute personne ou entité

without the Minister's prior written authorization. Explicit in this is that any goods of not first quality produced shall not be released, sold, or offered for sale, directly or indirectly, to any person or corporation other than Canada without the Minister's prior written authorization.

autre que le Canada sans l'autorisation préalable écrite du ministre. De façon explicite, tout bien qui n'est pas de première qualité ne peut être distribué, vendu ou offert en vente, directement ou indirectement, à toute personne physique ou morale autre que le Canada sans l'autorisation préalable écrite du ministre.

1.2.1 The information, data, know-how, formulas, algorithms, software, processes, systems, methods, designs, text, works, figures, tables, sketches, photographs, plans, drawings, specifications, samples, reports, names, inventions and/or ideas contained herein (hereinafter "Intellectual Property") is the exclusive property of Her majesty the Queen in Right of Canada as represented by the Minister of National Defence (hereinafter referred as "DND"). No one has the right to reproduce, disclose, disseminate, or utilize, in any manner or in any form, this Intellectual Property, or any part thereof, without the prior written consent of DND. For further information on the restrictions applicable to this Intellectual Property, or to request consent from DND, please contact the Design Authority, Director Soldier Systems Programme Management, or the Director of Intellectual Property, Department of National Defence, 101 Colonel By Dr., Ottawa, K1A 0K2, Canada.

1.2.1 Les informations, données, formules, algorithmes, logiciels, processus, systèmes, méthodes, dessins, ouvrages, figures, tableaux, croquis, photos, plans, dessins, spécifications, échantillons, rapports, noms, inventions ou idées, de même que le libellé ou le savoir-faire figurant aux présentes (ci-après désignés sous le nom collectif « propriété intellectuelle ») sont la propriété exclusive de Sa Majesté la Reine du Chef du Canada, représentée par le ministre de la Défense nationale (ci-après le « MDN »). Nul n'a le droit de reproduire, divulguer, diffuser ou utiliser, de quelque manière ou sous quelque forme que ce soit, cette propriété intellectuelle, en tout ou en partie, sans le consentement écrit préalable du MDN. Pour de plus amples informations sur les restrictions applicables à cette propriété intellectuelle, ou pour demander le consentement du MDN, veuillez contacter l'autorité responsable de la conception, Directeur – Administration du programme de l'équipement du soldat, ou le Directeur – Propriété intellectuelle, ministère de la Défense nationale, 101, promenade Colonel By, Ottawa, K1A 0K2, Canada.

2. APPLICABLE DOCUMENTS

2.1 Government Documents. Copies of this specification may be obtained from the Department of National Defence, Ottawa, Ontario, Canada, K1A 0K2, Attention: DSSPM 2-2.

2.2 Other Publications. The following documents form part of this Specification to the extent specified herein. Effective dates shall be those in effect on the date of manufacture. Sources are as shown.

ASTM International
P.O. Box C700
West Conshohocken, PA

2. DOCUMENTS APPLICABLES

2.1 Documents du gouvernement. Des copies de la présente spécification peuvent être obtenues du ministère de la Défense nationale, Ottawa (Ontario), Canada, K1A 0K2, à l'attention de: DAPES 2-2.

2.2 Autres publications. Les publications suivantes font partie intégrante de la présente spécification selon les modalités indiquées ci-après. La date d'entrée en vigueur doit être celle en vigueur à la date de fabrication. La source de diffusion est celle indiquée.

ASTM International
P.O. Box C700
West Conshohocken, PA

19428-2959, USA
Telephone: 610-832-9585
Email: service@astm.org

AATCC
P.O. Box 12215
Research Triangle Park, NC
27709, USA
Telephone: 919-549-3526
Email: jonesb@aatcc.org

CIE
International Committee on Illumination
CIE Central Bureau
Kegelgasse 27, A-1030
Vienna, Austria

or

Information Handling Services
15 Inverness Way East, M/S B203
Englewood, CO
80112-5776, USA

2.3 Sealed Patterns. Sealed patterns are made available to the bidders and the contractor(s) as a guide to production. In the case of CADPAT™ the sealed pattern reflects the design, pattern, motifs, repeat, clarity, that is required.

DSSPM 259-01	Cloth, Twist, Nylon/Cotton, Lightweight, CADPAT™ (TW), sealed for colours, motif size, colour distribution, print quality, penetration, clarity and pattern.

2.4 Order of Precedence.

2.4.1 In the event of any inconsistency in contract documents such as contract, specification and sealed patterns, the order of precedence shall be contract, specification, and sealed pattern.

2.4.2 In the event of a conflict between the text of this specification and the references cited herein, the text of this specification shall take precedence.

2.4.3 In the event of inconsistency within the specification, the Design Authority (DSSPM 2-2) shall be contacted for clarification.

19428-2959, ÉTATS-UNIS
Téléphone : 610-832-9585
Courriel: service@astm.org

AATCC
P.O. Box 12215
Research Triangle Park, NC
27709, ÉTATS-UNIS
Téléphone : 919-549-3526
Courriel: jonesb@aatcc.org

CIE
Commission internationale de l'éclairage
Bureau central de la CIE
Kegelgasse 27, A-1030
Vienne, AUTRICHE

ou

Information Handling Services
15 Inverness Way East, M / S B203
Englewood, CO
80112-5776, ÉTATS-UNIS

2.3 Modèles réglementaires. Des modèles réglementaires sont mis à la disposition des soumissionnaires et des entrepreneurs comme guide pour la production. Dans le cas du DCamC^{MC,} le modèle réglementaire reflète la conception, le dessin, les motifs, les répétitions et la clarté qui sont requis.

DSSPM 259-01	Tissu coton/nylon simple retors, DCamC^{MC} (RBT), pour les couleurs, la taille des motifs, la distribution des couleurs, la qualité de l'impression, la pénétration, la clarté et le modèle.

2.4 Ordre de préséance.

2.4.1 En cas d'incohérence entre les documents contractuels, soit le contrat, la spécification et les échantillons réglementaires, l'ordre de préséance est le suivant: le contrat, la spécification et le modèle réglementaire.

2.4.2 En cas de divergence entre les documents mentionnés aux présentes et le contenu de la présente spécification, cette dernière a préséance.

2.4.3 En cas d'incohérence dans l'énoncé de la spécification, il faut communiquer avec l'autorité responsable de la conception (DAPES 2-2) pour

obtenir des précisions.

2.4.4 For any inconsistency in technical details between languages, the language of the original document, which in this case is English, shall take precedence.

2.4.4 En cas d'incohérence dans les détails techniques, entre les deux langues, la langue du document d'origine, dans ce cas-ci l'anglais, a préséance.

3. REQUIREMENTS

3. EXIGENCES

3.1 CADPAT™ (TW) specifications. The materiel covered by this specification shall be free from imperfections or blemishes such as may adversely affect its appearance or serviceability. For inspection purposes, imperfections and blemishes shall be considered defects when clearly visible at a normal inspection distance of approximately one metre under good, preferably North Light, lighting conditions.

3.1 Spécification du DCamC^{MC} (RBT). Le tissu visé par la présente spécification doit être exempt d'imperfections ou de défauts qui pourraient nuire à son aspect ou à sa tenue en service. À des fins d'inspection, sont considérés comme défauts ceux qui sont clairement visibles à une distance d'inspection normale d'environ un mètre sous un bon éclairage, de préférence la lumière du nord.

3.2 Sealed Patterns. Sealed patterns, when furnished, shall constitute the standard only in regard to any properties not defined in this Specification, and in association with any notes which may be included on the reverse side of the sealed pattern tag. Under no circumstance are the Sealed Patterns to be mutilated or cut.

3.2 Modèles réglementaires. Les modèles réglementaires, quand ils sont fournis, doivent constituer la norme uniquement en ce qui concerne les propriétés qui ne sont pas définies aux présentes, compte tenu des notes qui peuvent figurer au verso de l'étiquette du modèle réglementaire. En aucun cas, les modèles réglementaires ne doivent être endommagés ni coupés.

3.3 Colour.

3.3 Couleur.

3.3.1 Unless otherwise specified, the printing shall be carried out in a wet process, with dyes. Woven goods shall be pre-dyed prior to printing. Only vat dyestuffs shall be used for any cotton component. Only acid dyestuffs shall be used for any nylon component. Only disperse dyestuffs shall be used for any polyester component. These requirements exist for both dyeing and printing operations.

3.3.1 Sauf indication contraire, l'impression doit être effectuée selon un procédé au mouillé, avec des colorants. Les tissus doivent être teints au préalable, avant l'impression. Seuls des colorants de cuve doivent être utilisés pour tout élément en coton. Seuls des colorants acides doivent être utilisés pour tout élément en nylon. Seuls des colorants dispersés doivent être utilisés pour tout élément en polyester. Les présentes exigences s'appliquent aux opérations de teinture et d'impression.

3.3.2 For CADPAT™(TW) the colours specified in para 3.3.9 below, numerically, must be met, unless otherwise specified in procurement documents, while any sealed pattern provided serves as a guide to the colours. Allowable tolerances are also stated below. Minimal flare when viewed under standard daylight, horizon, and fluorescent light for all colours is required. These colour measurements shall fall within the specified tolerances after 15 laundering cycles when laundered in accordance with the method specified in the applicable cloth specification unless otherwise specified by the applicable cloth specification.

3.3.2 Pour le DCamC^{MC} (RBT), les couleurs précisées sous forme numérique au paragraphe 3.3.9 ci-dessous doivent être respectées, sauf indication contraire dans les documents d'achat, tous les modèles réglementaires fournis devant servir de guide pour les couleurs. Les tolérances admissibles sont également indiquées ci-dessous. Les tissus doivent présenter un éclat minimal lorsqu'on les examine à la lumière du jour, contre l'horizon et sous une lumière fluorescente, et ce, pour toutes les couleurs. Ces mesures de couleur doivent se situer à l'intérieur des tolérances prescrites après 15 cycles de blanchissage selon la méthode décrite dans la norme applicable au tissu, sauf indication contraire.

3.3.3 Print quality. Complete penetration of all component fibres in the specified cloth is required. Overall print quality, including colour penetration (i.e. the overall colouring of the wrong side of the printed cloth), uniformity of each colour, clarity, definition, evenness, and all other qualities indicative of a good print must be at least as good as depicted by the Sealed Pattern DSSPM 259-01.

3.3.3 Qualité d'impression. La pénétration complète de toutes les fibres composant le tissu prescrit est requise. La qualité globale de l'impression, y compris la pénétration de la couleur (c.-à-d. la coloration globale de l'envers du tissu imprimé), l'uniformité de chaque couleur, la clarté, la définition, la régularité, et toutes les autres qualités indicatives d'une bonne impression, doit être au moins aussi bonne que ce qui est indiqué dans le modèle réglementaire DSSPM 259-01.

3.3.4 After printing and/or dyeing in an aqueous medium, all fabrics shall be appropriately stabilized by processes such as drying, heat setting, sanforizing, or other appropriate and durable means, if required to achieve the desired properties defined in the applicable Tables of the cloth specifications.

3.3.4 Après l'impression ou la teinture dans un milieu aqueux, tous les tissus doivent être convenablement stabilisés par des procédés tels que le séchage, le thermofixage, le sanforisage ou tout autre moyen approprié et durable, au besoin, pour obtenir les propriétés désirées définies dans les tableaux applicables de la spécification relative au tissu.

3.3.5 Hand of the finished, printed specified textiles shall be as represented by the appropriate sealed patterns for the finished cloths.

3.3.5 La main des tissus prescrits, finis et imprimés, doit être identique aux modèles réglementaires appropriés des tissus finis.

3.3.6 Infra-red Reflection (IRR). The required IRR characteristics are defined in para 3.3.10 and 3.3.11.2 and Tables I, II, III, and IV of this specification, and depicted graphically in Figures I, II, III, and IV of this specification. Note that the requirements are mandatory from 400-1350 nm for Canadian Average Green, from 730 – 1350 nm for Light Green and Brown, and from 400 – 2000 nm for Black. The waveband range 1351 – 2000 nm for colours Canadian Average Green, Light Green, and Brown is not mandatory at this time; however, the Canadian Forces requirement remains as stated in the respective colour tables and should always be any manufacturer's target. Unless otherwise specified for the textile on order, these characteristics must be met both when manufactured (new) and after 15 laundering cycles when laundered in accordance with the method specified in the applicable cloth specification (See para 3.3.11.2).

3.3.6 Réflectance dans l'infrarouge (RIR). Les caractéristiques de la RIR requises sont définies aux paragraphes 3.3.10 et 3.3.11.2 et dans les tableaux I, II, III et IV de la présente spécification, et elles sont représentées graphiquement dans les figures I, II, III et IV. Veuillez prendre note que les exigences sont obligatoires dans la plage de 400 à 1 350 nm pour le vert canadien moyen, de 730 à 1 350 nm pour le vert pâle et le brun, et de 400 à 2 000 nm pour le noir. La plage de longueurs d'ondes de 1 351 à 2 000 nm pour le vert canadien moyen, le vert pâle et le brun n'est pas obligatoire pour le moment; toutefois, les exigences des Forces canadiennes demeurent comme il est indiqué dans les tables de couleurs respectives et le fabricant doit chercher à les respecter. Sauf indication contraire pour le tissu commandé, ces caractéristiques doivent être respectées tant pour les tissus fabriqués (neufs), qu'après 15 cycles de blanchissage selon la méthode décrite dans la spécification relative au tissu (voir le paragraphe 3.3.11.2).

3.3.7 Finish. No finish will be applied to obtain fabric stability or temporary colour and/or IRR compliance unless required in the applicable textile specification.

3.3.7 Fini. Aucun fini ne sera appliqué pour obtenir une stabilité du tissu ou le respect temporaire de la couleur ou de la RIR, à moins qu'un tel fini ne soit prescrit dans la spécification relative au tissu.

3.3.8 Measurement requirements.

3.3.8.1 All measurements for both colour and infra-red reflection are to be made in accordance with CIE publication 15 - 2004 and ASTM E308.2008 using CIE Illuminant C and a 2 degree observer, specular component included. These conditions of measurement must be followed and included in all test reports.

3.3.8.2 Sample preparation for all chromaticity and IRR measurements shall be in accordance with AATCC Instrumental Measurement Procedure #6, A1.3, non-opaque samples. It has been found that more than one layer of self fabric are usually required to provide consistent readings. A standard black backing is recommended. It is the responsibility of the operator to determine and follow a standard sample preparation which meets the stated conditions.

3.3.8.3 Representative samples are to be measured a minimum of four times, rotating the sample 90° after each measurement. All measurements are then to be averaged to produce a single set of reflectance values. The test results shall include the average spectral reflectance of each measured sample.

NOTE: Referee conditions:
- diffuse spectral 8^0/hemispheral reflectance factors using a 150 mm diameter integrating sphere accessory coated with $BaSO_4$
- measurements made at 1 nm intervals over the entire required range with a fixed spectral bandpass of 5 nm up to 860 nm and a variable spectral bandpass of <20 nm from 860 nm to 2000 nm
- measurement geometry 8^0 incidence, hemispherical collection (8^0/t), with the spectral component included
- referee sample measurement: the irradiated area to be 8 mm x 15 mm with a bandpass of 5 nm (preferred)
- where sample size or other condition dictates, irradiated area may be reduced to 4 mm x 9 mm with the bandpass also reduced to 2 nm
- where it is impractical to follow this preparation method, a single layer of the sample may be backed by NRC (National Research

3.3.8 Exigences relatives aux mesures.

3.3.8.1 Toutes les mesures de couleur et de réflectance dans l'infrarouge doivent être effectuées conformément aux publications CIE 15-2004 et ASTM E308.2008 à l'aide de l'illuminant C et de l'observateur à 2° de la CIE, composante spéculaire incluse. Ces conditions de mesure doivent être respectées et incluses dans tous les rapports d'essai.

3.3.8.2 La préparation des échantillons pour toutes les mesures de couleur et de RIR doit être réalisée conformément à la procédure de mesure instrumentale n° 6 de l'American Association of Textile Chemists and Colorists (AATCC), A1.3, pour des échantillons non opaques. On a constaté que plusieurs épaisseurs de tissu extérieur sont habituellement requises pour donner une lecture uniforme. L'emploi d'un fond noir standard est recommandé. Il incombe à l'opérateur de déterminer et de suivre un protocole standard de préparation des échantillons qui répond aux conditions énoncées.

3.3.8.3 Des échantillons représentatifs doivent être mesurés au moins quatre fois, en tournant l'échantillon de 90° après chaque mesure. On doit ensuite calculer la moyenne de toutes les mesures pour produire un ensemble unique de valeurs de réflectance. Les résultats du test doivent comprendre la réflectance spectrale moyenne de chaque échantillon mesuré.

REMARQUE: Conditions de référence:
- Facteurs de réflectance spectrale 8° / hémisphérique diffuse utilisant une sphère intégrante de 150 mm de diamètre, enduite de BaSO4
- Mesures effectuées à intervalles de 1 nm sur toute la plage requise avec une bande passante spectrale fixe de 5 nm à 860 nm et une bande passante spectrale variable < 20 nm entre 860 nm et 2 000 nm
- Géométrie de mesure avec incidence de 8° et collecte hémisphérique (8°/t), composante spectrale incluse
- Mesure des échantillons de référence: la zone irradiée doit être de 8 mm x 15 mm avec une bande passante de 5 nm (de préférence)
- Lorsque la taille des échantillons ou d'autres conditions l'exigent, la zone irradiée peut être réduite à 4 mm x 9 mm et la bande passante à 2 nm
- Quand il est impossible de suivre ce protocole

Council) standard black felt backing, Reference REN09870.DAT

de préparation, on peut placer une seule épaisseur de l'échantillon contre un fond en feutre noir standard du CNRC (Conseil national de recherches du Canada), référence REN09870.DAT

3.3.9 Colour. The CIE LAB 1976 co-ordinates for illuminant C, 2° observer are:

3.3.9 Couleur. Les coordonnées CIE LAB de 1976 pour l'illuminant C et un observateur à 2° sont:

	L*	**a***	**b***
Canadian Average Green / Vert canadien moyen	27.41	-6.78	16.46
Light Green / Vert pâle	42.90	-13.40	26.80
Brown / Brun	36.50	4.60	14.50
Black / Noir	18.71	0.41	1.21

3.3.9.1 Maximum tolerance is plus/minus 2 CIE LAB units for each coordinate (L*a*b* values, not deltas).

3.3.9.1 La tolérance maximale est de +/- 2 unités CIE LAB pour chaque coordonnée (valeurs L*a*b*, pas les valeurs delta).

3.3.9.1.1 These criteria are repeated in each of the applicable tables, I-IV, at the end of this document, with the CIE 1931/CIE LAB 1976 values also.

3.3.9.1.1 Ces critères sont repris dans chacun des tableaux applicables, I-IV, à la fin de ce document, ainsi qu'avec les valeurs CIE 1931/CIE LAB 1976.

3.3.9.2 Gloss. Unless otherwise specified by the applicable cloth specification, gloss values shall be less than 1.5 units at 20, 60, and 85 degrees when gloss is a specified requirement. Gloss is measured in accordance with ASTM D523.

3.3.9.2 Lustre. Sauf indication contraire dans la spécification applicable au tissu, les valeurs de lustre doivent être inférieures à 1,5 unité à 20°, 60° et 85° lorsque le lustre est une exigence prescrite. Le lustre est mesuré selon la norme ASTM D523.

3.3.10 Infra-red Reflection. Tables I, II, III, and IV contain the requirements for Infra-red reflection for each colour. Upper and lower tolerances are included in each Table. Figures I, II, III, and IV relate to the Tables and are a visual representation of the requirement with upper and lower tolerances shown.

3.3.10 Réflectance dans l'infrarouge. Les tableaux I, II, III et IV contiennent les exigences relatives à la réflectance dans l'infrarouge pour chaque couleur. Les tolérances supérieures et inférieures sont incluses dans chaque tableau. Les figures I, II, III et IV sont associées aux tableaux et sont une représentation visuelle des exigences, avec les tolérances supérieures et inférieures indiquées.

3.3.11 Requirement after Laundering.

3.3.11 Exigence après lavage.

3.3.11.1 Unless otherwise specified, the colour measurements specified herein shall remain within the original tolerances (+/- 2 CIELAB units) after 15 laundering cycles, when the laundering cycles are carried out in accordance with the methodology prescribed in the applicable textile specification.

3.3.11.1 Sauf indication contraire, les mesures de la couleur spécifiées dans les présentes doivent être à l'intérieur des tolérances d'origine (+/- 2 unités CIELAB) après 15 cycles de lavage, lorsque ces cycles sont réalisés conformément à la méthode prescrite dans les spécifications applicables des tissus.

3.3.11.2 Unless otherwise specified, the infra-red reflectance measurements specified herein shall remain within the original tolerances indicated in the Tables for each colour after 15 laundering cycles, when the laundering cycles are carried out in accordance with the methodology prescribed in the applicable textile specification.

3.3.11.2 Sauf indication contraire, les mesures de la réflectance dans l'infrarouge prescrites aux présentes doivent respecter les tolérances d'origine indiquées aux tableaux pour chaque couleur après 15 cycles de lavage, lorsque ces cycles sont réalisés conformément à la méthode prescrite dans la spécification applicable au tissu.

3.4 Piece Marking. Unless otherwise specified, each piece shall have a label attached to the selvedge at one end. The label shall be made of linen or heavy cardboard, with a reinforced eyelet for attaching a tying cord, and shall be legibly marked with the following information:

a) Contractor's identification (name or CA number)
b) Contract Number
c) Gross length in metres, including allowance
d) Net length in metres
e) Piece number
f) Number of lengths per piece
g) Nomenclature/Classification (textile specification)
h) Colour
j) NATO Stock Number
k) Date of manufacture

All of the above information is required when the goods are contracted for and being delivered directly to the Crown. When contracted by a third party with delivery not to the Crown, only (a), (e), (g), (h), (j), and (k) are mandatory. The other information must be readily available to the Crown and/or its contractor if required.

3.4 Marquage des pièces. Chaque pièce de tissu livrée au Canada doit porter, à une extrémité, une étiquette fixée à la lisière. L'étiquette doit être en toile de lin, en oléfine thermoliée ou en carton fort et percée d'un œillet renforcé permettant d'attacher une ficelle; elle doit porter les indications suivantes en caractères lisibles:

a) Identification de l'entrepreneur (nom ou numéro de CA)
b) Numéro du contrat
c) Longueur brute en mètres, y compris la réserve
d) Longueur nette en mètres
e) Numéro du rouleau
f) Nombre de longueurs par rouleau
g) Nomenclature/classification (spécification relative au tissu)
h) Couleur
j) Numéro de nomenclature OTAN
k) Date de fabrication

Tous les renseignements ci-dessus sont requis lorsque les marchandises sont obtenues dans le cadre d'un contrat et sont livrées directement au gouvernement. Lorsque les marchandises sont obtenues par contrat par une tierce partie sans être livrées au gouvernement, seuls les éléments a), e), g), h), j), et k) sont obligatoires. Les autres renseignements doivent être facilement accessibles pour le gouvernement ou son entrepreneur, le cas échéant.

4. QUALITY CONTROL/INSPECTION

4.1 Unless otherwise specified in the contract or purchase order, the contractor is responsible for the performance of all inspections and tests as specified herein and to demonstrate that the materiel and services conform to the requirements specified in this Specification. Contractors may utilize their own or any other inspection facility acceptable to the Crown or its designated representative.

4. CONTRÔLE DE LA QUALITÉ ET INSPECTION

4.1 Sauf indication contraire dans le contrat ou les documents d'achat, l'entrepreneur est tenu d'effectuer toutes les inspections et les essais prescrits ci-après afin de démontrer que les matériaux et les services sont conformes aux exigences énoncées dans la présente spécification. L'entrepreneur peut utiliser ses propres installations d'inspection ou avoir recours à toute autre

Contractors may also utilize their own test facilities so long as Crown approval has been obtained in advance and the conditions stated in ISO quality and manufacturing publications are followed.

installation jugée acceptable par le gouvernement ou son représentant désigné. L'entrepreneur peut également utiliser ses propres installations d'essai, pourvu qu'il ait obtenu à l'avance l'approbation du gouvernement et que les conditions décrites dans les publications de l'ISO sur la fabrication et la qualité soient respectées.

4.2 The Crown reserves the right to perform any of the inspections or tests specified herein, where such are deemed necessary to ensure the materiel and/or services submitted to the Crown for acceptance meet all requirements of the contract. This applies equally to materiel contracted for delivery directly to the Department of National Defence or as component parts to a supplier with a contract for products for Defence use.

4.2 Le gouvernement se réserve le droit d'effectuer toute vérification ou tout essai jugé nécessaire pour s'assurer que le matériel et les services présentés au gouvernement pour acceptation sont conformes à toutes les exigences énoncées dans le contrat. Ceci s'applique également au matériel obtenu sous contrat qui doit être livré directement au ministère de la Défense nationale ou comme composants livrés à un fournisseur dans le cadre d'un contrat pour des produits à des fins militaires.

4.3 Any requirement for test data to be presented at pre-contract award or at pre-production will be stated in procurement documents. Unless otherwise specified, this data shall result from tests carried out on current production, at independent certified laboratories, in full accordance with all specified test methods and conditions, and these shall be included in the laboratory reports. Bidding and/or contractual documents shall include requirements for in-contract testing including: specific tests, their frequency, their source, and their reporting procedure. At a minimum, all shipments of CADPAT™ printed textile shall be accompanied by producer laboratory reports for colour and IRR measurements. These measurements shall have been carried out on the goods being shipped and shall have been carried out on each processed batch, and at least every 5,000 metres.

4.3 Toute exigence relative aux données d'essai qui doivent être présentées à l'étape de préadjudication ou de présérie sera indiquée dans les documents d'achat. Sauf indication contraire, ces données doivent être obtenues par des essais effectués pendant la production courante dans des laboratoires indépendants accrédités, conformément à toutes les méthodes et conditions d'essai prescrites, et elles doivent figurer dans les rapports de laboratoire. Les documents d'appel d'offres ou du contrat doivent inclure les exigences relatives aux essais pendant l'exécution du contrat, y compris: la définition des essais, leur fréquence, leur source et la production des rapports. Au minimum, tous les lots de tissu DCamC^{MC} imprimé doivent être accompagnés des rapports de laboratoire du producteur pour les mesures de couleur et de RIR. Ces mesures doivent avoir été réalisées sur les marchandises expédiées et effectuées sur chaque lot traité, et à tout le moins, à tous les 5 000 m.

5. PACKAGING

5.1 Unless otherwise specified, packaging, packing, and marking of shipping containers shall be in accordance with the terms of the contract.

5. CONDITIONNEMENT

5.1 Sauf indication contraire, le conditionnement, l'emballage et le marquage des conteneurs d'expédition doivent être conformes aux modalités du contrat.

6. NOTES

6.1 Ordering data. Procurement documents should specify the following:

6. REMARQUES

6.1 Données de commande. Les documents d'achat doivent préciser:

a) title, number and date of this Specification and of the textile specification
b) NATO Stock number of required item
c) Nomenclature/Classification (textile specification)

d) Pre-production requirements
e) Packaging, packing, and marking of shipping containers
f) The Design Authority
g) The Quality Assurance Authority

a) le titre, le numéro et la date de la présente spécification et de la spécification relative au tissu
b) le numéro de nomenclature OTAN des articles requis

c) la nomenclature ou la classification (spécification relative au tissu)
d) les exigences de présérie
e) le conditionnement, l'emballage et le marquage des conteneurs d'expédition
f) l'autorité responsable de la conception
g) l'autorité responsable de l'assurance de la qualité

6.2 Definition of terms.

6.2.1 Design Authority. The Design Authority is the Government agency responsible for the technical aspects of the design and for changes to the design. The Design Authority for this requirement is the Directorate of Soldier Systems Programme Management (DSSPM), Department of National Defence.

6.2.2 Quality Assurance Authority. The Quality Assurance Authority is the Government agency responsible for providing assurance the materiel and services supplied by the contractor are in accordance with the terms of the contract. The Quality Assurance Authority is the Directorate of Quality Assurance (DQA), Department of National Defence.

6.2.3 Master sealed pattern. A master sealed pattern is the authorized prototype of the item to be produced and is held only by the government.

6.2.4 Sealed pattern. The sealed pattern is a duplicate of the master sealed pattern which is the Department of National Defence's authorized prototype of the item to be produced. Sealed patterns are available for the contractor to use as a *conceptual example for production*. Contractors should note that sealed patterns may not incorporate all the details cited in this Specification and the order of precedence prevails (see para 2.4).

6.2.5 Specification Copies. Copies of this Specification are available from the Department of National Defence, Directorate of Soldier Systems

6.2 Définition des termes.

6.2.1 Autorité responsable de la conception. L'autorité responsable de la conception est l'organisme gouvernemental chargé des aspects techniques de la conception et des modifications connexe. Dans le cas des articles visés par la présente spécification, il s'agit de la Direction - Administration du programme de l'équipement du soldat (DAPES).

6.2.2 Autorité responsable de l'assurance de la qualité. L'autorité responsable de l'assurance de la qualité est l'organisme gouvernemental chargé d'assurer que le matériel et les services fournis par l'entrepreneur satisfont aux modalités du contrat. L'autorité responsable de l'assurance de la qualité est le directeur de l'assurance de la qualité, ministère de la Défense nationale du Canada.

6.2.3 Modèle réglementaire principal. Prototype autorisé de l'article qui doit être fabriqué et dont le gouvernement est le seul détenteur.

6.2.4 Modèle réglementaire. Copie exacte du modèle réglementaire principal, qui est le prototype autorisé par le ministère de la Défense nationale pour l'article qui doit être fabriqué. Les modèles réglementaires sont mis à la disposition de l'entrepreneur comme *exemple conceptuel pour la production*. Les entrepreneurs doivent prendre note que les modèles réglementaires n'incorporent pas nécessairement tous les détails indiqués aux présentes, en cas de divergence, l'ordre de préséance mentionné au paragraphe 2.4 prévaut.

6.2.5 Copies de la spécification. Des copies de la présente spécification peuvent être obtenues auprès du ministère de la Défense nationale,

Programme Management, Ottawa, Ontario, K1A 0K2, Attention: DSSPM 2-2.

6.3 The production of a product to this specification, or the evaluation of a product to this specification, may require the use of materials and/or equipment that could be hazardous. This specification does not purport to address all safety, health and environmental concerns, if any associated with its use. It is the responsibility of the user of this specification to establish appropriate safety, health and environmental practices and to determine the applicability of regulatory limitations prior to use.

Direction de l'administration du programme de l'équipement du soldat, Ottawa (Ontario), K1A 0K2, à l'attention: DAPES 2-2.

6.3 La fabrication ou l'évaluation d'un produit conformément à la présente spécification pourrait nécessiter l'utilisation de matériel ou d'équipement dangereux. La présente spécification n'a pas pour objet de traiter de toutes les préoccupations relatives à la santé, à la sécurité et à l'environnement liées à son utilisation. Il incombe à l'utilisateur de la spécification d'établir au préalable des méthodes appropriées qui tiennent compte des questions d'environnement, de santé et de sécurité, et de déterminer les restrictions réglementaires applicables.

TABLE I CADPAT™ REQUIREMENTS CANADIAN AVERAGE GREEN

TABLEAU I EXIGENCES RELATIVES AU DCamC[MC] VERT CANADIEN MOYEN

SPECIFICATIONS / *SPÉCIFICATIONS*	**x**	**0,3600**
	y	**0,4098**
CIE 1931/CIE LAB 1976	**Y%**	**5,24**
ILLUMINANT C, 2 deg.	**DW.nm**	**569,36**
specular component included/	**S%**	**38,50**
composante spéculaire incluse	**L***	**27,41**
	a*	**-6,78**
	b*	**16,46**

Wavelength *Longueur d'onde* nm	Reflection *Réflexion* %	ST.DEV. *Écart type* %	Refl. Min *Réfl. min.* %	Refl. Max *Réfl. max.* %		Wavelength *Longueur d'onde* nm	Reflection *Réflexion* %	ST.DEV. *Écart type* %	Refl. Min *Réfl. min.* %	Refl. Max *Réfl. max.* %
400	1,89	0,77	1,12	2,67		840	42,14	14,80	27,35	56,94
410	1,95	0,85	1,10	2,79		850	42,50	14,90	27,60	57,39
420	2,00	0,93	1,07	2,93		860	42,85	15,00	27,85	57,85
430	2,11	1,04	1,07	3,16		870	43,20	15,11	28,09	58,31
440	2,26	1,17	1,09	3,43		880	43,20	15,05	28,15	58,24
450	2,39	1,28	1,11	3,67		890	43,16	14,99	28,16	58,15
460	2,46	1,33	1,14	3,79		900	43,11	14,94	28,17	58,06
470	2,53	1,37	1,16	3,90		910	43,07	14,90	28,17	57,97
480	2,62	1,43	1,19	4,05		920	43,03	14,86	28,18	57,89
490	2,72	1,50	1,22	4,22		930	43,00	14,82	28,18	57,82
500	2,95	1,63	1,32	4,58		940	42,82	14,76	28,06	57,58
510	3,70	2,02	1,68	5,72		950	42,64	14,70	27,94	57,33
520	4,45	2,44	2,01	6,88		960	42,45	14,64	27,81	57,09
530	5,24	2,84	2,40	8,09		970	42,28	14,60	27,68	56,87
540	6,05	3,26	2,79	9,31		980	42,09	14,56	27,53	56,64
550	6,65	3,59	3,06	10,24		990	41,91	14,52	27,39	56,44
560	6,41	3,53	2,88	9,94		1000	42,56	14,65	27,91	57,20
570	6,17	3,49	2,68	9,65		1010	43,21	14,77	28,43	57,98
580	5,84	3,36	2,48	9,20		1020	43,85	14,90	28,95	58,76
590	5,47	3,22	2,26	8,69		1030	44,45	15,04	29,41	59,49
600	5,14	3,08	2,05	8,22		1040	45,15	15,18	29,97	60,33
610	4,86	2,97	1,89	7,84		1050	45,51	15,22	30,30	60,73
620	4,60	2,88	1,72	7,48		1060	45,59	15,15	30,43	60,74
630	4,39	2,78	1,61	7,16		1070	45,66	15,09	30,56	60,75
640	4,19	2,67	1,52	6,87		1080	45,73	15,04	30,69	60,76
650	3,96	2,54	1,42	6,50		1090	45,81	14,99	30,82	60,79
660	3,65	2,33	1,32	5,98		1100	45,88	14,94	30,94	60,81
670	3,34	2,13	1,21	5,47		1110	44,88	14,74	30,14	59,61
680	4,52	2,71	1,81	7,23		1120	43,87	14,55	29,32	58,42
690	5,87	3,42	2,45	9,30		1130	42,87	14,39	28,48	57,25
700	8,94	4,60	4,34	13,54		1140	41,87	14,24	27,63	56,10
710	14,61	6,69	7,92	21,30		1150	40,86	14,11	26,76	54,97
720	20,27	8,94	11,33	29,21		1160	39,87	14,00	25,87	53,88
730	26,37	10,48	15,89	36,86		1170	38,72	13,46	25,26	52,18
740	32,48	12,31	20,17	44,78		1180	37,49	13,01	24,49	50,50
750	35,95	13,20	22,75	49,15		1190	36,27	12,66	23,61	48,93
760	36,58	13,40	23,18	49,99		1200	35,04	12,43	22,61	47,47
770	37,52	13,62	23,91	51,14		1210	36,48	12,40	24,08	48,88
780	38,46	13,84	24,62	52,29		1220	36,68	12,37	24,31	49,05
790	39,40	14,06	25,34	53,46		1230	36,87	12,35	24,53	49,22
800	40,33	14,29	26,04	54,62		1240	37,07	12,33	24,75	49,40
810	41,28	14,53	26,75	55,81		1250	37,26	12,30	24,96	49,57
820	41,44	14,60	26,83	56,04		1260	37,46	12,28	25,18	49,75
830	41,79	14,70	27,09	56,49		1270	37,65	12,27	25,39	49,92

TABLE I CADPAT™ REQUIREMENTS CANADIAN AVERAGE GREEN (cont.)

TABLEAU I EXIGENCES RELATIVES AU DCamC^MC VERT CANADIEN MOYEN (suite)

Wavelength *Longueur d'onde*	Reflection *Réflexion*	ST.DEV. *Écart type*	Refl. Min *Réfl. min.*	Refl. Max *Réfl. max.*		Wavelength *Longueur d'onde*	Reflection *Réflexion*	ST.DEV. *Écart type*	Refl. Min *Réfl. min.*	Refl. Max *Réfl. max.*
nm	%	%	%	%		nm	%	%	%	%
1280	37,85	12,25	25,60	50,10		1720	17,30	7,49	9,81	24,79
1290	38,05	12,24	25,81	50,28		1730	17,11	7,45	9,66	24,56
1300	37,40	12,05	25,36	49,45		1740	16,92	7,42	9,50	24,34
1310	36,75	11,87	24,88	48,62		1750	16,72	7,34	9,38	24,07
1320	36,10	11,71	24,39	47,81		1760	16,52	7,26	9,26	23,79
1330	35,45	11,57	23,88	47,01		1770	16,33	7,18	9,14	23,51
1340	34,80	11,44	23,36	46,23		1780	16,12	7,11	9,02	23,23
1350	34,15	11,32	22,83	45,47		1790	15,92	7,03	8,89	22,96
1360	31,04	10,44	20,61	41,48		1800	15,72	6,96	8,76	22,68
1370	27,94	9,55	18,39	37,49		1810	14,93	6,63	8,30	21,55
1380	24,83	8,66	16,17	33,50		1820	14,13	6,29	7,85	20,42
1390	21,73	7,78	13,95	29,50		1830	13,34	5,95	7,39	19,29
1400	18,62	6,89	11,73	25,51		1840	12,55	5,62	6,93	18,16
1410	15,52	6,00	9,51	21,52		1850	11,75	5,28	6,47	17,03
1420	12,41	5,12	7,29	17,53		1860	10,96	4,94	6,01	15,90
1430	11,67	4,90	6,76	16,57		1870	10,16	4,61	5,56	14,77
1440	10,93	4,70	6,23	15,63		1880	9,37	4,27	5,10	13,64
1450	10,19	4,52	5,67	14,71		1890	8,57	3,94	4,64	12,51
1460	9,46	4,35	5,10	13,81		1900	7,78	3,60	4,18	11,38
1470	9,85	4,52	5,33	14,37		1910	6,99	3,26	3,72	10,25
1480	10,26	4,69	5,56	14,95		1920	6,19	2,93	3,26	9,12
1490	10,66	4,87	5,79	15,53		1930	5,65	2,58	3,07	8,23
1500	11,06	5,05	6,01	16,11		1940	5,32	2,41	2,91	7,73
1510	11,46	5,24	6,22	16,70		1950	4,99	2,28	2,71	7,26
1520	11,86	5,42	6,44	17,29		1960	4,67	2,19	2,48	6,86
1530	12,27	5,61	6,66	17,88		1970	4,33	2,16	2,18	6,49
1540	12,98	5,83	7,16	18,81		1980	4,48	2,21	2,27	6,69
1550	13,69	6,10	7,59	19,79		1990	4,63	2,27	2,36	6,90
1560	14,41	6,42	7,99	20,82		2000	4,79	2,33	2,46	7,12
1570	15,12	6,78	8,34	21,89						
1580	15,83	7,17	8,66	23,00						
1590	16,55	7,60	8,95	24,15						
1600	17,26	8,05	9,21	25,31						
1610	17,40	7,86	9,54	25,26						
1620	17,54	7,72	9,82	25,25						
1630	17,67	7,61	10,06	25,29						
1640	17,82	7,56	10,26	25,38						
1650	17,96	7,55	10,40	25,51						
1660	18,09	7,59	10,49	25,68						
1670	18,23	7,68	10,55	25,92						
1680	18,04	7,64	10,40	25,69						
1690	17,85	7,60	10,25	25,45						
1700	17,67	7,56	10,11	25,23						
1710	17,49	7,52	9,96	25,01						

FIGURE 1 CADPAT™ (TW)

COLOUR: CANADIAN AVERAGE GREEN

FIGURE 1 DCamC^MC (RBT)

COULEUR: VERT CANADIEN MOYEN

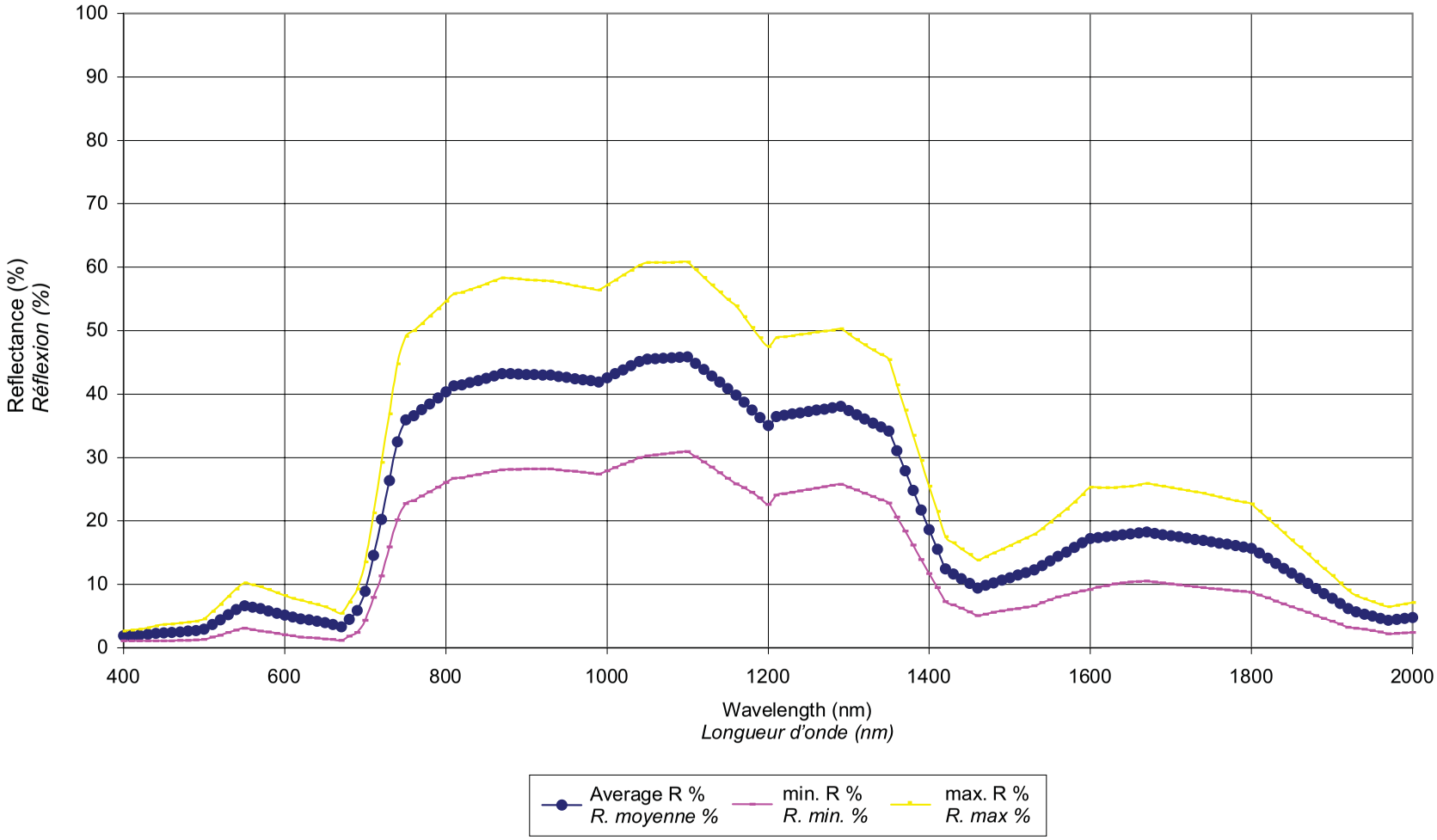

TABLE II CADPAT™ REQUIREMENTS LIGHT GREEN

TABLEAU II EXIGENCES RELATIVES AU DCamC^MC VERT PÂLE

SPECIFICATIONS / *SPÉCIFICATIONS*:		
	x	**0,3614**
	y	**-0.4339**
CIE 1931/CIE LAB 1976	**Y%**	**13,10**
ILLUMINANT C, 2 deg.	**DW.nm**	**566,70**
specular component included	**S%**	**44,70**
composante spéculaire incluse	**L***	**42,90**
	a*	**-13,40**
	b*	**26,80**

Wavelength *Longueur d'onde*	**Reflection** *Réflexion*	**ST.DEV.** *Écart type*	**Refl. Min** *Réfl. min.*	**Refl. Max** *Réfl. max.*		**Wavelength** *Longueur d'onde*	**Reflection** *Réflexion*	**ST.DEV.** *Écart type*	**Refl. Min** *Réfl. min.*	**Refl. Max** *Réfl. max.*
nm	**%**	**%**	**%**	**%**		**nm**	**%**	**%**	**%**	**%**
400	4,37					840	52,68	18,50	34,18	71,18
410	4,30					850	53,12	18,62	34,50	71,74
420	4,24					860	53,37	18,75	34,81	72,32
430	4,18					870	54,00	18,89	35,12	72,89
440	4,12					880	54,00	18,81	35,19	72,80
450	4,13					890	53,95	18,74	35,21	72,69
460	4,47					900	53,89	18,68	35,21	72,57
470	4,82					910	53,84	18,62	35,22	72,46
480	6,82					920	53,79	18,57	35,22	72,36
490	9,53					930	53,75	18,53	35,22	72,27
500	12,22					940	53,53	18,45	35,08	71,97
510	14,86					950	53,30	18,37	34,93	71,67
520	17,51					960	53,06	18,30	34,76	71,36
530	17,24					970	52,84	18,25	34,60	71,09
540	15,74					980	52,61	18,20	34,41	70,80
550	14,23					990	52,39	18,16	34,24	70,55
560	12,69					1000	53,20	18,31	34,89	71.51
570	11,15					1010	54,01	18,47	35,54	72,47
580	10,50					1020	54,82	18,63	36,19	73,45
590	10,24					1030	55,56	18,80	36,76	74,36
600	10,34					1040	56,43	18,97	37,46	75,41
610	11,91					1050	56,89	19,02	37,87	75,91
620	13,49					1060	56,98	18,94	38,04	75,92
630	15,05					1070	57,07	18,87	38,20	75,94
640	16,61					1080	57,16	18,80	38,36	75,95
650	17,94					1090	57,26	18,73	38,52	75,99
660	18,70					1100	57,35	18,67	38,67	76,02
670	19,47					1110	56,10	18,42	37,68	74,52
680	18,68					1120	54,84	18,19	36,65	73,03
690	17,71					1130	53,59	17,98	35,61	71,57
700	17,46					1140	52,33	17,80	34,54	70,13
710	18,30					1150	51,08	17,64	33,45	68,72
720	19,14					1160	49,83	17,50	32,33	67,33
730	32,97	13,10	19,86	46.07		1170	48,40	16,83	31,57	65,23
740	40,59	15,38	25,21	55,98		1180	46,87	16,26	30,61	63,13
750	44,94	16,50	28,43	61,44		1190	45,33	15,83	29,51	61,16
760	45,73	16,76	28,98	62,49		1200	43,80	15,54	28,26	59,34
770	46,90	17,02	29,88	63,92		1210	45,60	15,50	30,10	61,10
780	48,07	17,29	30,78	65,36		1220	45,85	15,46	30,38	61,31
790	49,25	17,58	31,67	66,82		1230	46,09	15,43	30,66	61,52
800	50,41	17,87	32,55	68,28		1240	46,34	15,41	30,93	61,75
810	51,60	18,17	33,43	69,77		1250	46,58	15,38	31,20	61,96
820	51,80	18,25	33,54	70,05		1260	46,83	15,36	31,47	62,18
830	52,24	18,37	33,87	70,61		1270	47,07	15,33	31,74	62,40

TABLE II CADPAT™ REQUIREMENTS LIGHT GREEN (cont.)

TABLEAU II EXIGENCES RELATIVES AU DCamC^MC VERT PÂLE (suite)

Wavelength *Longueur d'onde* nm	Reflection *Réflexion* %	ST.DEV. *Écart type* %	Refl. Min *Réfl. min.* %	Refl. Max *Réfl. max.* %		Wavelength *Longueur d'onde* nm	Reflection *Réflexion* %	ST.DEV. *Écart type* %	Refl. Min *Réfl. min.* %	Refl. Max *Réfl. max.* %
1280	47,32	15,32	32,00	62,63		1720	21,62	9,36	12,26	30,98
1290	47,56	15,30	32,26	62,86		1730	21,39	9,32	12,07	30,70
1300	46,76	15,06	31,70	61,82		1740	21,15	9,28	11,87	30,43
1310	45,94	14,84	31,10	60,78		1750	20,91	9,18	11,73	30,08
1320	45,12	14,64	30,48	59,76		1760	20,66	9,08	11,58	29,73
1330	44,31	14,46	29,85	58,77		1770	20,41	8,98	11,43	29,39
1340	43,50	14,30	29,20	57,79		1780	20,15	8,88	11,27	29,04
1350	42,69	14,16	28,53	56,84		1790	19,91	8,79	11,11	28,70
1360	38,80	13,05	25,76	51,85		1800	19,65	8,70	10,95	28,36
1370	34,92	11,94	22,98	46,86		1810	18,66	8,28	10,38	26,94
1380	31,04	10,83	20,21	41,87		1820	17,67	7,86	9,81	25,53
1390	27,16	9,72	17,44	36,88		1830	16,68	7,44	9,23	24,12
1400	23,28	8,61	14,66	31,89		1840	15,68	7,02	8,66	22,70
1410	19,39	7,51	11,89	26,90		1850	14,69	6,60	8,09	21,29
1420	15,51	6,40	9,11	21,91		1860	13,70	6,18	7,52	19,88
1430	14,58	6,13	8,45	20,71		1870	12,70	5,76	6,94	18,46
1440	13,66	5,88	7,79	19,54		1880	11,71	5,34	6,37	17,05
1450	12,74	5,65	7,09	18,38		1890	10,72	4,92	5,80	15,64
1460	11,82	5,44	6,38	17,26		1900	9,73	4,50	5,23	14,23
1470	12,32	5,65	6,67	17,97		1910	8,73	4,08	4,65	12,81
1480	12,82	5,87	6,95	18,69		1920	7,74	3,66	4,08	11,40
1490	13,33	6,09	7,24	19,42		1930	7,07	3,22	3,84	10,29
1500	13,82	6,32	7,51	20,14		1940	6,65	3,01	3,64	9,66
1510	14,33	6,55	7,78	20,87		1950	6,23	2,85	3,39	9,08
1520	14,83	6,78	8,05	21,61		1960	5,83	2,74	3,10	8,57
1530	15,34	7,01	8,32	22,35		1970	5,42	2,69	2,72	8,11
1540	16,23	7,28	8,95	23,51		1980	5,60	2,76	2,84	8,37
1550	17,11	7,62	9,49	24,73		1990	5,79	2,84	2,95	8,63
1560	18,01	8,02	9,99	26,03		2000	5,99	2,92	3,07	8,90
1570	18,90	8,47	10,42	27,37						
1580	19,79	8,97	10,82	28,75						
1590	20,68	9,50	11,18	30,19						
1600	21,58	10,07	11,51	31,64						
1610	21,75	9,83	11,92	31,58						
1620	21,92	9,65	12,28	31,57						
1630	22,09	9,52	12,58	31,61						
1640	22,27	9,45	12,82	31,72						
1650	22,44	9,44	13,00	31,89						
1660	22,61	9,49	13,12	32,10						
1670	22,79	9,61	13,18	32,39						
1680	22,56	9,55	13,00	32,11						
1690	22,32	9,5	12,82	31,81						
1700	22,09	9,45	12,64	31,54						
1710	21,86	9,40	12,45	31,26						

FIGURE 2 CADPAT™ (TW)

COLOUR: LIGHT GREEN

FIGURE 2 DCamC^MC (RBT)

COULEUR: VERT PÂLE

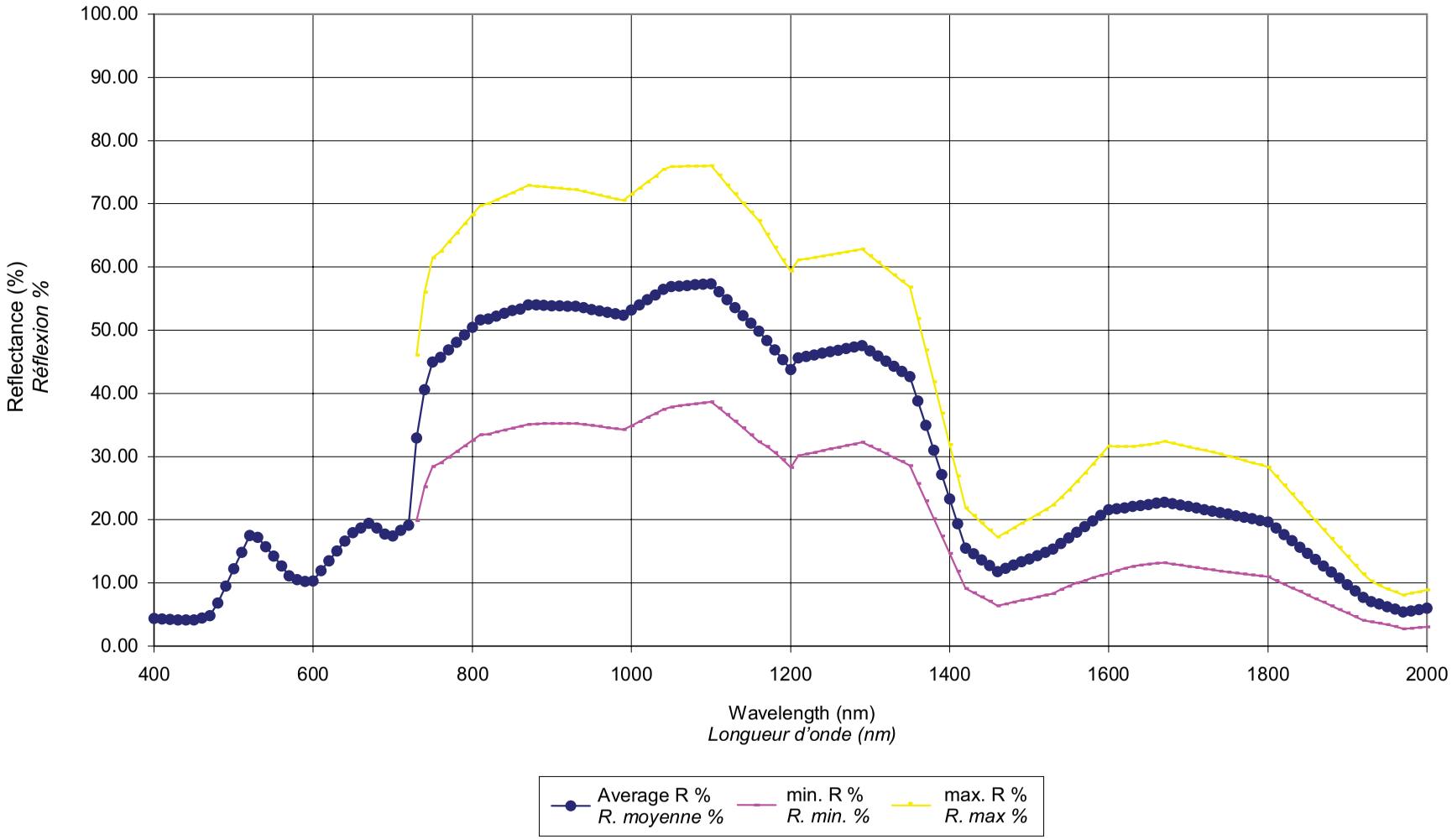

TABLE III CADPAT™ REQUIREMENTS BROWN

TABLEAU III EXIGENCES RELATIVES AU DCamC^MC BRUN

SPECIFICATIONS / *SPÉCIFICATIONS:*	**x**	**0.3802**
	y	**0.3649**
CIE 1931/CIE LAB 1936	**Y%**	**9.30**
ILLUMINANT C. 2 deg.	**DW. nm**	**583.00**
specular component included	**S%**	**31.60**
composante spéculaire incluse	**L***	**36.50**
	a*	**4.60**
	b*	**14.50**

Wavelength *Longueur d'onde*	Reflection *Réflexion*	ST.DEV. *Écart type*	Refl. Min *Réfl. min.*	Refl. Max *Réfl. max.*		Wavelength *Longueur d'onde*	Reflection *Réflexion*	ST.DEV. *Écart type*	Refl. Min *Réfl. min.*	Refl. Max *Réfl. max.*
nm	%	%	%	%		nm	%	%	%	%
400	5.26					840	52.68	18.50	34.18	71.18
410	5.19					850	53.12	18.62	34.50	71.74
420	5.11					860	53.57	18.75	34.81	72.32
430	5.04					870	54.00	18.89	35.12	72.89
440	4.97					880	54.00	18.81	35.19	72.80
450	4.94					890	53.95	18.74	35.21	72.89
460	5.13					900	53.89	18.68	35.21	72.57
470	5.31					910	53.84	18.62	35.22	72.46
480	6.34					920	53.79	18.57	35.22	72.36
490	7.72					930	53.75	18.53	35.22	72.27
500	8.90					940	53.53	18.45	35.08	71.97
510	9.30					950	53.30	18.37	34.93	71.67
520	9.71					960	53.06	18.30	34.76	71.36
530	9.29					970	52.84	18.25	34.60	71.09
540	8.51					980	52.61	18.20	34.41	70.80
550	7.83					990	52.39	18.16	34.24	70.55
560	7.50					1000	53.20	18.31	34.89	71.51
570	7.16					1010	54.01	18.47	35.54	72.47
580	8.44					1020	54.82	18.63	36.19	73.45
590	10.40					1030	55.56	18.80	36.76	74.36
600	12.06					1040	56.43	18.97	37.46	75.41
610	12.51					1050	56.89	19.02	37.87	75.91
620	12.95					1060	56.98	18.94	38.04	75.92
630	14.20					1070	57.07	18.87	38.20	75.94
640	15.65					1080	57.16	18.80	38.36	75.95
650	16.89					1090	57.26	18.73	38.52	75.99
660	17.62					1100	57.35	18.67	38.67	76.02
670	18.36					1110	56.10	18.42	37.68	74.52
680	17.59					1120	54.84	18.19	36.65	73.03
690	16.65					1130	53.59	17.98	35.61	71.57
700	16.44					1140	52.33	17.80	34.54	70.13
710	17.29					1150	51.08	17.64	33.45	68.72
720	25.34	11.17	14.18	36.51		1160	49.83	17.50	32.33	67.33
730	32.97	13.10	19.86	46.07		1170	48.40	16.83	31.57	65.23
740	40.59	15.38	25.21	55.96		1180	46.87	16.26	30.61	63.13
750	44.94	16.50	28.43	61.44		1190	45.33	15.83	29.51	61.16
760	45.73	16.76	28.98	62.49		1200	43.80	15.54	28.26	59.34
770	46.90	17.02	29.88	63.92		1210	45.60	15.50	30.10	61.10
780	48.07	17.29	30.78	65.36		1220	45.85	15.46	30.38	61.31
790	49.25	17.58	31.67	66.82		1230	46.09	15.43	30.66	61.52
800	50.41	17.87	32.55	68.28		1240	46.34	15.41	30.93	61.75
810	51.60	18.17	33.43	69.77		1250	46.58	15.38	31.20	61.96
820	51.80	18.25	33.54	70.05		1260	46.83	15.36	31.47	62.18
830	52.24	18.37	33.87	70.61		1270	47.07	15.33	31.74	62.40

TABLE III CADPAT™ REQUIREMENTS BROWN (cont.)

TABLEAU III EXIGENCES RELATIVES AU DCamC^MC BRUN (suite)

Wavelength *Longueur d'onde*	Reflection *Réflexion*	ST.DEV. *Écart type*	Refl. Min *Réfl. min.*	Refl. Max *Réfl. max.*		Wavelength *Longueur d'onde*	Reflection *Réflexion*	ST.DEV. *Écart type*	Refl. Min *Réfl. min.*	Refl. Max *Réfl. max.*
nm.	%	%	%	%		nm.	%	%	%	
1280	47.32	15.32	32.00	62.63		1720	21.62	9.36	12.26	30.98
1290	47.56	15.30	32.26	62.86		1730	21.39	9.32	12.07	30.70
1300	46.76	15.06	31.70	61.82		1740	21.15	9.28	11.87	30.43
1310	45.94	14.84	31.10	60.78		1750	20.91	9.18	11.73	30.08
1320	45.12	14.64	30.48	59.76		1760	20.66	9.08	11.58	29.73
1330	44.31	14.46	29.85	58.77		1770	20.41	8.98	11.43	29.39
1340	43.50	14.30	29.20	57.79		1780	20.15	8.88	11.27	29.04
1350	42.69	14.16	28.53	56.84		1790	19.91	8.79	11.11	28.70
1360	38.80	13.05	25.76	51.85		1800	19.65	8.70	10.95	28.36
1370	34.92	11.94	22.98	46.86		1810	18.66	8.28	10.38	26.94
1380	31.04	10.83	20.21	41.87		1820	17.67	7.86	9.81	25.53
1390	27.16	9.72	17.44	36.88		1830	16.68	7.44	9.23	24.12
1400	23.28	8.61	14.66	31.89		1840	15.68	7.02	8.66	22.70
1410	19.39	7.51	11.89	26.90		1850	14.69	6.60	8.09	21.29
1420	15.51	6.40	9.11	21.91		1860	13.70	6.18	7.52	19.88
1430	14.58	6.13	8.45	20.71		1870	12.70	5.76	6.94	18.46
1440	13.66	5.88	7.79	19.54		1880	11.71	5.34	6.37	17.05
1450	12.74	5.65	7.09	18.38		1890	10.72	4.92	5.80	15.64
1460	11.82	5.44	6.38	17.26		1900	9.73	4.50	5.23	14.23
1470	12.32	5.65	6.67	17.97		1910	8.73	4.08	4.65	12.81
1480	12.82	5.87	6.95	18.69		1920	7.74	3.66	4.08	11.40
1490	13.33	6.09	7.24	19.42		1930	7.07	3.22	3.84	10.29
1500	13.82	6.32	7.51	20.14		1940	6.65	3.01	3.64	9.66
1510	14.33	6.55	7.78	20.87		1950	6.23	2.85	3.39	9.08
1520	14.83	6.78	8.05	21.61		1960	5.83	2.74	3.10	8.57
1530	15.34	7.01	8.32	22.35		1970	5.42	2.69	2.72	8.11
1540	16.23	7.28	8.95	23.51		1980	5.60	2.76	2.84	8.37
1550	17.11	7.62	9.49	24.73		1990	5.79	2.84	2.95	8.63
1560	18.01	8.02	9.99	26.03		2000	5.99	2.92	3.07	8.90
1570	18.90	8.47	10.42	27.37						
1580	19.79	8.97	10.82	28.75						
1590	20.68	9.50	11.18	30.19						
1600	21.58	10.07	11.51	31.64						
1610	21.75	9.83	11.92	31.58						
1620	21.92	9.65	12.28	31.57						
1630	22.09	9.52	12.58	31.61						
1640	22.27	9.45	12.82	31.72						
1650	22.44	9.44	13.00	31.89						
1660	22.61	9.49	13.12	32.10						
1670	22.79	9.61	13.18	32.39						
1680	22.56	9.55	13.00	32.11						
1690	22.32	9.50	12.82	31.81						
1700	22.09	9.45	12.64	31.54						
1710	21.86	9.40	12.45	31.26						

FIGURE 3 CADPAT™ (TW)

COLOUR: BROWN

FIGURE 3 DCamC^MC (RBT)

COULEUR: BRUN

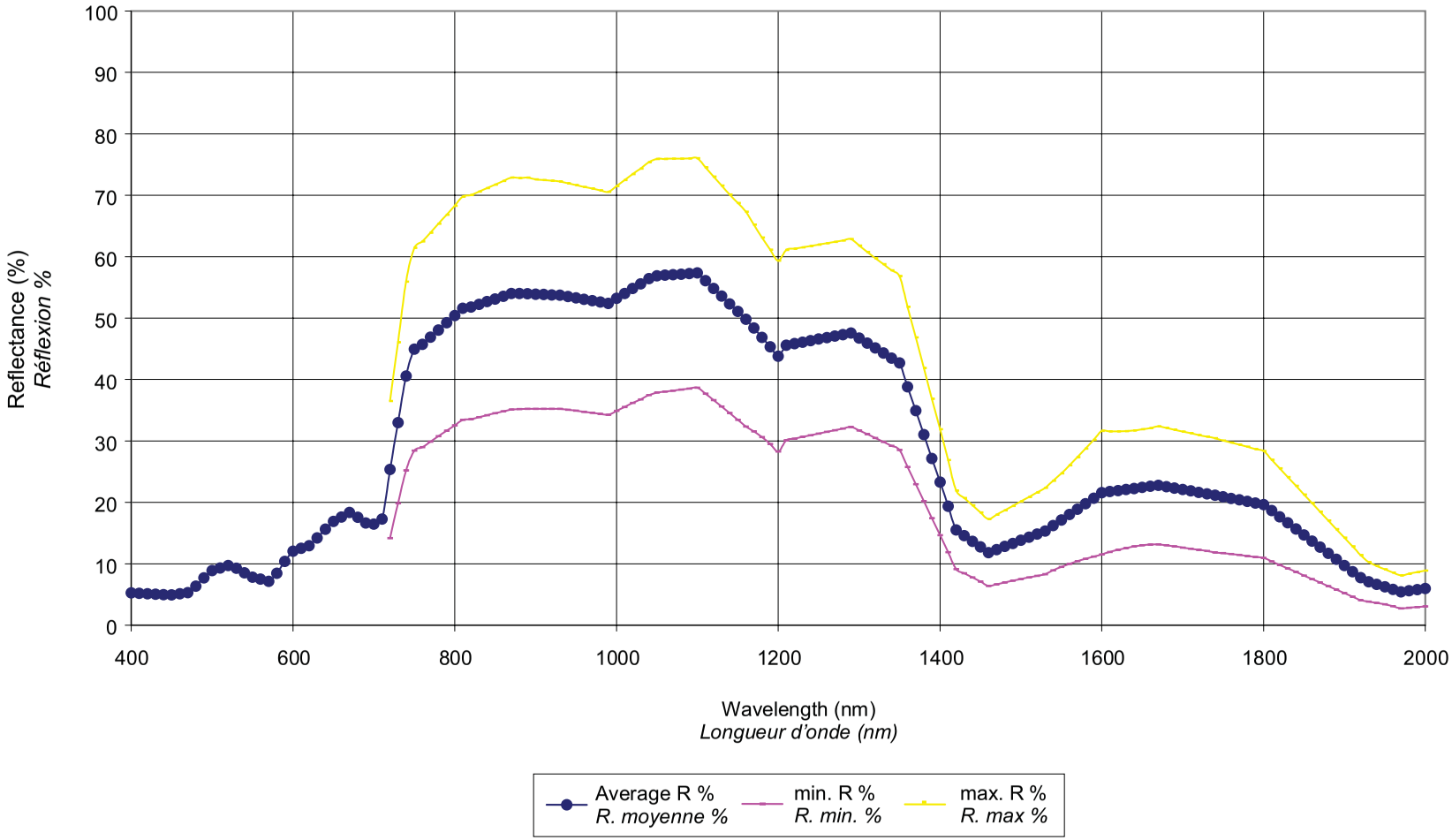

TABLE IV CADPAT™ REQUIREMENTS BLACK

TABLEAU IV EXIGENCES RELATIVES AU DCamC[MC] NOIR

SPECIFICATIONS / *SPÉCIFICATIONS:*		
	x	**0,3188**
	y	**0,3224**
CIE 1931/CIE LAB 1971	**Y%**	**2,68**
ILLUMINANT C, 2 deg.	**DW.nm**	**582,34**
specular component included	**S%**	**4,01**
composante spéculaire incluse	**L***	**18,71**
	a*	**0,41**
	b*	**1,21**

Wavelength (nm) ***Longueur d'onde (nm)***	**Reflection %** ***Réflexion %***		**Wavelength (nm)** ***Longueur d'onde (nm)***	**Reflection %** ***Réflexion %***		**Wavelength (nm)** ***Longueur d'onde (nm)***	**Reflection %** ***Réflexion %***		**Wavelength (nm)** ***Longueur d'onde (nm)***	**Reflection %** ***Réflexion %***
400	2,52		830	2,98		1260	3,94		1690	4,42
410	2,50		840	2,99		1270	3,95		1700	4,28
420	2,48		850	3,01		1280	3,97		1710	4,14
430	2,48		860	3,03		1290	3,99		1720	4,00
440	2,50		870	3,05		1300	4,01		1730	3,85
450	2,52		880	3,06		1310	4,02		1740	3,71
460	2,53		890	3,09		1320	4,04		1750	3,57
470	2,55		900	3,13		1330	4,05		1760	3,61
480	2,56		910	3,17		1340	4,06		1770	3,65
490	2,58		920	3,21		1350	4,07		1780	3,69
500	2,59		930	3,25		1360	4,06		1790	3,72
510	2,61		940	3,29		1370	4,06		1800	3,76
520	2,63		950	3,33		1380	4,05		1810	3,80
530	2,64		960	3,37		1390	4,07		1820	3,82
540	2,66		970	3,41		1400	4,11		1830	3,84
550	2,67		980	3,42		1410	4,15		1840	3,86
560	2,68		990	3,44		1420	4,19		1850	3,88
570	2,69		1000	3,46		1430	4,18		1860	3,90
580	2,70		1010	3,47		1440	4,18		1870	3,92
590	2,72		1020	3,49		1450	4,18		1880	3,92
600	2,74		1030	3,51		1460	4,18		1890	3,92
610	2,76		1040	3,52		1470	4,18		1900	3,92
620	2,78		1050	3,54		1480	4,19		1910	3,91
630	2,80		1060	3,56		1490	4,19		1920	3,91
640	2,82		1070	3,56		1500	4,20		1930	3,91
650	2,89		1080	3,61		1510	4,20		1940	3,91
660	2,90		1090	3,64		1520	4,21		1950	3,90
670	2,92		1100	3,67		1530	4,21		1960	3,90
680	2,94		1110	3,70		1540	4,22		1970	3,90
690	2,96		1120	3,73		1550	4,25		1980	3,92
700	2,97		1130	3,76		1560	4,28		1990	3,94
710	2,98		1140	3,79		1570	4,31		2000	3,96
720	2,98		1150	3,80		1580	4,34			
730	2,98		1160	3,81		1590	4,37			
740	2,99		1170	3,82		1600	4,40			
750	3,00		1180	3,83		1610	4,43			
760	3,01		1190	3,84		1620	4,45			
770	2,95		1200	3,85		1630	4,47			
780	2,97		1210	3,86		1640	4,49			
790	2,98		1220	3,87		1650	4,50			
800	3,00		1230	3,88		1660	4,52			
810	3,02		1240	3,90		1670	4,54			
820	2,96		1250	3,92		1680	4,56			

FIGURE 4 CADPAT™ (TW)

COLOUR: BLACK

FIGURE 4 DCamC^MC (RBT)

COULEUR: NOIR

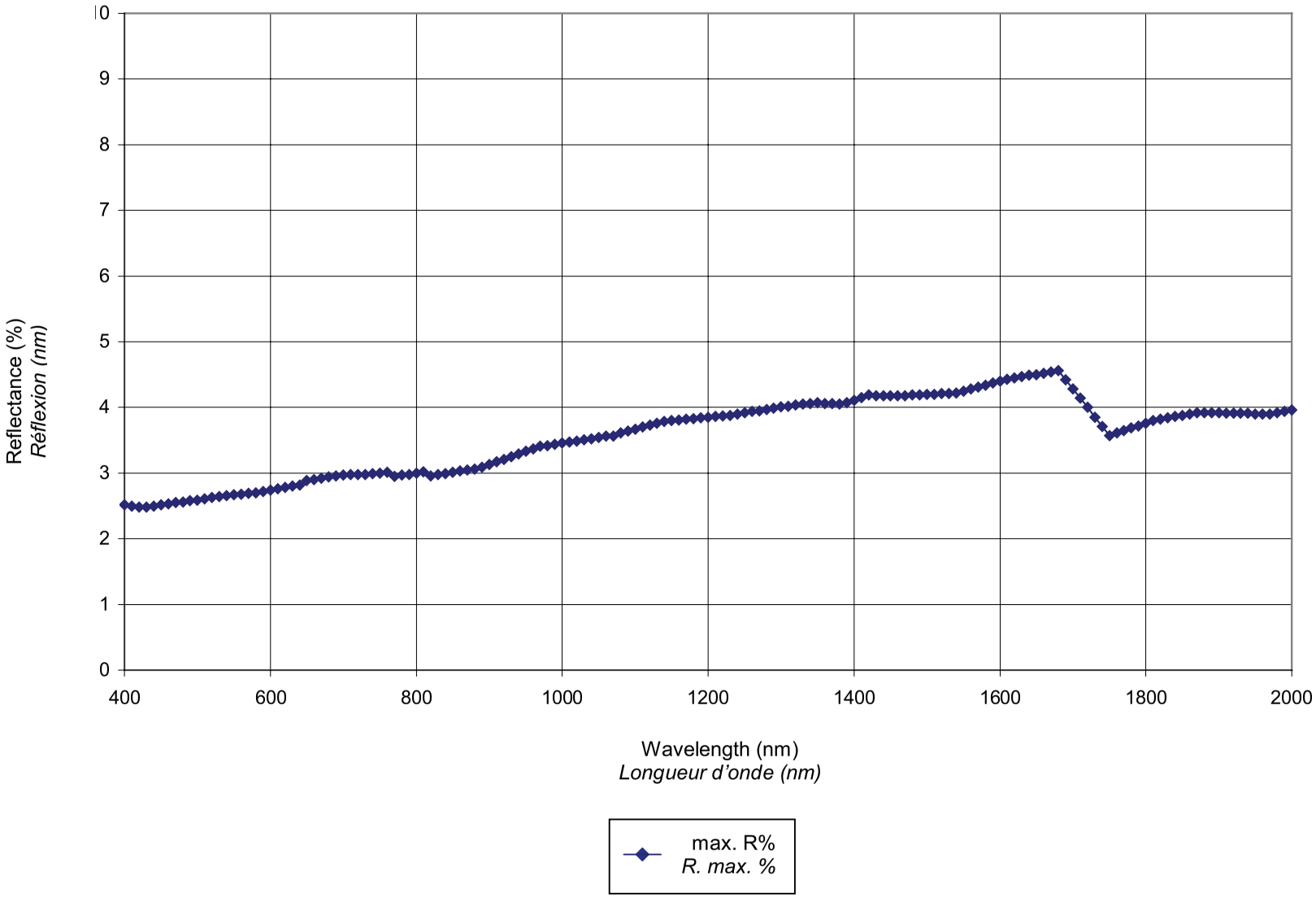

NOTICE

This documentation has been reviewed by the technical authority and does not contain controlled goods. Disclosure notices and handling instructions originally received with the document shall continue to apply.

AVIS

Cette documentation a été révisée par l'autorité technique et ne contient pas de marchandises contrôlées. Les avis de divulgation et les instructions de manutention reçues originalement doivent continuer de s'appliquer.

SPECIFICATION

FOR

CADPAT™ (AR)

[CANADIAN DISRUPTIVE PATTERN (ARID)]

SPÉCIFICATION

DCamC^{MC} (RA)

[DESSIN DE CAMOUFLAGE CANADIEN,

(RÉGIONS ARIDES)]

1. SCOPE

1.1 Scope. This specification covers the technical performance requirements for both colour and Infra-red Reflectance for CADPAT™ (AR), Canadian Disruptive Pattern Arid. It is intended for use, when specified, for all textiles used by the Canadian Forces for operational clothing and personal equipment. Any allowed deviations from the requirements stated herein shall be clearly defined in procurement documents.

1.2 The information contained herein is Copyright to Her Majesty the Queen of Canada, as is its associated pattern. The term CADPAT™, with and without extensions, is a registered Trademark belonging to the Department of National Defence. Any of the data contained in this specification, and its associated pattern, may be used only for goods for Canada. The printed textile and any items made therefrom shall be for the sole end use of DND. There shall be no selling or offering for sale of goods incorporating the CADPAT™ pattern and colours to any person or entity other than Canada

1. PORTÉE

1.1 Portée. La présente spécification vise les exigences de rendement technique relatives à la couleur et à la réflectance dans l'infrarouge du dessin de camouflage canadien, régions arides [DCamC^{MC} (RA)]. Elle est destinée à être utilisée, lorsque cela est prescrit, pour tous les tissus employés par les Forces canadiennes dans la confection des vêtements opérationnels et de l'équipement individuel. Tous les écarts autorisés par rapport aux exigences énoncées dans le présent document doivent être clairement définis dans les documents d'achat.

1.2 L'information contenue dans le présent document, ainsi que le modèle associé, sont la propriété de Sa Majesté la Reine du Canada et protégés par droit d'auteur. Le terme DCamC^{MC}, avec ou sans extension, est une marque déposée, propriété du ministère de la Défense nationale. Les données contenues dans la présente spécification et le modèle associé ne peuvent être utilisés que pour des marchandises produites pour le Canada. Les tissus imprimés et tous les articles fabriqués dans ce tissu sont à l'usage final exclusif du MDN. Nul bien incorporant le motif et les couleurs du DCamC^{MC} ne peut être vendu ni offert à toute personne ou entité

without the Minister's prior written authorization. Explicit in this is that any goods of not first quality produced shall not be released, sold, or offered for sale, directly or indirectly, to any person or corporation other than Canada without the Minister's prior written authorization.

1.2.1 The information, data, know-how, formulas, algorithms, software, processes, systems, methods, designs, text, works, figures, tables, sketches, photographs, plans, drawings, specifications, samples, reports, names, inventions and/or ideas contained herein (hereinafter "Intellectual Property") is the exclusive property of Her majesty the Queen in Right of Canada as represented by the Minister of National Defence (hereinafter referred as "DND"). No one has the right to reproduce, disclose, disseminate, or utilize, in any manner or in any form, this Intellectual Property, or any part thereof, without the prior written consent of DND. For further information on the restrictions applicable to this Intellectual Property, or to request consent from DND, please contact the Design Authority, Director Soldier Systems Programme Management, or the Director of Intellectual Property, Department of National Defence, 101 Colonel By Dr., Ottawa, K1A 0K2, Canada.

2. APPLICABLE DOCUMENTS

2.1 Government Documents. Copies of this specification may be obtained from the Department of National Defence, Ottawa, Ontario, Canada, K1A 0K2, Attention: DSSPM 2-2.

2.2 Other Publications. The following documents form part of this Specification to the extent specified herein. Effective dates shall be those in effect on the date of manufacture. Sources are as shown.

ASTM
American Society for Testing and Materials
100 Bar Harbor Drive
West Conshohocken, PA
19428, USA

autre que le Canada sans l'autorisation préalable écrite du ministre. De façon explicite, tout bien qui n'est pas de première qualité ne peut être distribué, vendu ou offert en vente, directement ou indirectement, à toute personne physique ou morale autre que le Canada sans l'autorisation préalable écrite du ministre.

1.2.1 Les informations, données, formules, algorithmes, logiciels, processus, systèmes, méthodes, dessins, ouvrages, figures, tableaux, croquis, photos, plans, dessins, spécifications, échantillons, rapports, noms, inventions ou idées, de même que le libellé ou le savoir-faire figurant aux présentes (ci-après désignés sous le nom collectif « propriété intellectuelle ») sont la propriété exclusive de Sa Majesté la Reine du Chef du Canada, représentée par le ministre de la Défense nationale (ci-après le « MDN »). Nul n'a le droit de reproduire, divulguer, diffuser ou utiliser, de quelque manière ou sous quelque forme que ce soit, cette propriété intellectuelle, en tout ou en partie, sans le consentement écrit préalable du MDN. Pour de plus amples informations sur les restrictions applicables à cette propriété intellectuelle, ou pour demander le consentement du MDN, veuillez contacter l'autorité responsable de la conception, Directeur – Administration du programme de l'équipement du soldat, ou le Directeur – Propriété intellectuelle, ministère de la Défense nationale, 101, promenade Colonel By, Ottawa, K1A 0K2, Canada.

2. DOCUMENTS APPLICABLES

2.1 Documents du gouvernement. Des copies de la présente spécification peuvent être obtenues du ministère de la Défense nationale, Ottawa (Ontario), Canada K1A 0K2, à l'attention de: DAPES 2-2.

2.2 Autres publications. Les documents suivants font partie intégrante de la présente spécification dans la mesure prescrite par cette dernière. La version en vigueur à la date de fabrication s'applique. La source de diffusion est celle qui est indiquée.

ASTM
American Society for Testing and Materials
100 Bar Harbor Drive
West Conshohocken, PA
19428-2959 19428, ÉTATS-UNIS

AATCC
American Association of Textile Chemists and Colorists, Technical Manual
P.O. Box 12215,
Research Triangle Park,
North Carolina
27709, USA

CIE
International Committee on Illumination
CIE Central Bureau
Kegelgasse 27, A-1030
Vienna, Austria

or

Information Handling Services
15 Inverness Way East, M/S B203
Englewood, CO
80112-5776, USA

2.3 Sealed Patterns. Sealed patterns are made available to the bidders and the contractor(s) as a guide to production. In the case of CADPAT™ the sealed pattern reflects the design, pattern, motifs, repeat, clarity, that is required.

DSSPM 253-02	Cloth, Twist, Nylon/Cotton, Lightweight, CADPAT™ (AR), for colours, motif size, colour distribution, print quality, penetration, clarity

2.4 Order of Precedence.

2.4.1 In the event of any inconsistency in contract documents such as contract, Specification and sealed patterns, the order of precedence shall be contract, Specification, and sealed pattern.

2.4.2 In the event of a conflict between the text of this Specification and the references cited herein, the text of this Specification shall take precedence.

2.4.3 For any inconsistency in technical details between languages, the language of the original document, which in this case is English, shall take precedence.

AATCC
American Association of Textile Chemists and Colorists, Technical Manual
P.O. Box 12215
Research Triangle Park
North Carolina
27709, ÉTATS-UNIS

CIE
Commission internationale de l'éclairage
Bureau central de la CIE
Kegelgasse 27, A-1030
Vienne, AUTRICHE

ou

Information Handling Services
15 Inverness Way East, M / S B203
Englewood, CO
80112-5776, ÉTATS-UNIS

2.3 Modèles réglementaires. Des modèles réglementaires sont mis à la disposition des soumissionnaires et des entrepreneurs comme guide pour la production. Dans le cas du DCamC^{MC}, le modèle réglementaire reflète la conception, le dessin, les motifs, les répétitions et la clarté qui sont requis.

DSSPM 253-02	Tissu coton/nylon simple retors, DCamC^{MC} (AR), pour les couleurs, la taille des motifs, la distribution des couleurs, la qualité de l'impression, la pénétration et la clarté

2.4 Ordre de préséance.

2.4.1 En cas d'incohérence entre les documents contractuels, soit le contrat, la spécification et les échantillons réglementaires, l'ordre de préséance est le suivant: le contrat, la spécification et le modèle réglementaire.

2.4.2 En cas de divergence entre les documents mentionnés aux présentes et le contenu de la présente spécification, cette dernière a préséance.

2.4.3 En cas d'incohérence dans les détails techniques, entre les deux langues, la langue du document d'origine, dans ce cas-ci l'anglais, a préséance.

3. REQUIREMENTS

3.1 CADPAT™ (AR) Specifications. The materiel covered by this specification shall be free from imperfections or blemishes such as may adversely affect its appearance or serviceability. For inspection purposes, imperfections and blemishes shall be considered defects when clearly visible at a normal inspection distance of approximately one metre under good, preferably North Light, lighting conditions.

3.2 Sealed Patterns. Sealed patterns, when furnished, shall constitute the standard only in regard to any properties not defined in this Specification, and in association with any notes which may be included on the reverse side of the sealed pattern tag. Under no circumstance are the Sealed Patterns to be mutilated or cut.

3.3 Colour.

3.3.1 Unless otherwise specified, the printing shall be carried out in a wet process, with dyes. Woven goods shall be pre-dyed prior to printing. Only vat dyestuffs shall be used for any cotton component. Only acid dyestuffs shall be used for any nylon component. Only disperse dyestuffs shall be used for any polyester component. These requirements exist for both dyeing and printing operations.

3.3.2 For CADPAT™ (AR) the colours specified in para 3.8 and Table I below, numerically, must be met, unless otherwise specified in procurement documents, while any sealed pattern provided serves as a guide to the colours. Allowable tolerances are also stated below. Minimal flare when viewed under standard daylight, horizon, and fluorescent light for all colours is required. These colour measurements shall fall within the specified tolerances after 15 laundering cycles when laundered in accordance with the method specified in the applicable cloth specification unless otherwise specified by the applicable cloth specification.

3.3.3 Print Quality. Overall print quality, including colour penetration (i.e. the overall colouring of the wrong side of the printed cloth), uniformity of each colour, clarity, definition,

3. EXIGENCES

3.1 Spécification du DCamC^MC (RA). Le tissu visé par la présente spécification doit être exempt d'imperfections ou de défauts qui pourraient nuire à son aspect ou à sa tenue en service. À des fins d'inspection, sont considérés comme défauts ceux qui sont clairement visibles à une distance d'inspection normale d'environ un mètre sous un bon éclairage, de préférence la lumière du nord.

3.2 Modèles réglementaires. Les modèles réglementaires, quand ils sont fournis, doivent constituer la norme uniquement en ce qui concerne les propriétés qui ne sont pas définies aux présentes, compte tenu des notes qui peuvent figurer au verso de l'étiquette du modèle réglementaire. En aucun cas, les modèles réglementaires ne doivent être endommagés ni coupés.

3.3 Couleur.

3.3.1 Sauf indication contraire, l'impression doit être effectuée selon un procédé au mouillé, avec des colorants. Les tissus doivent être teints au préalable, avant l'impression. Seuls des colorants de cuve doivent être utilisés pour tout élément en coton. Seuls des colorants acides doivent être utilisés pour tout élément en nylon. Seuls des colorants dispersés doivent être utilisés pour tout élément en polyester. Les présentes exigences s'appliquent aux opérations de teinture et d'impression.

3.3.2 Pour le DCamC^MC (RA), les couleurs précisées sous forme numérique au paragraphe 3.8 et dans le tableau I ci-dessous doivent être respectées, sauf indication contraire dans les documents d'achat, tous les modèles réglementaires fournis devant servir de guide pour les couleurs. Les tolérances admissibles sont également indiquées ci-dessous. Les tissus doivent présenter un éclat minimal lorsqu'on les examine à la lumière du jour, contre l'horizon et sous une lumière fluorescente, et ce, pour toutes les couleurs. Ces mesures de couleur doivent se situer à l'intérieur des tolérances prescrites après 15 cycles de blanchissage selon la méthode décrite dans la norme applicable au tissu, sauf indication contraire.

3.3.3 Qualité d'impression. La qualité globale de l'impression, y compris la pénétration de la couleur (c.-à-d. la coloration globale de l'envers du tissu imprimé), l'uniformité de chaque couleur, la

evenness, and all other qualities indicative of a good print must be at least as good as depicted by the Sealed Pattern DSSPM 253-02.

clarté, la définition, la régularité, et toutes les autres qualités indicatives d'une bonne impression, doit être au moins aussi bonne que ce qui est indiqué dans le modèle réglementaire DSSPM 253-02.

3.3.4 Complete penetration of all component fibres in the specified cloth is required. After printing and/or dyeing in an aqueous medium, all fabrics shall be appropriately stabilized by processes such as drying, heat setting, sanforizing, or other appropriate and durable means, if required to achieve the desired properties defined in the applicable Tables of the cloth specifications. Hand of the finished, printed specified textiles shall be as represented by the appropriate sealed patterns for the finished cloths.

3.3.4 La pénétration complète de toutes les fibres composant le tissu prescrit est requise. Après l'impression ou la teinture dans un milieu aqueux, tous les tissus doivent être convenablement stabilisés par des procédés tels que le séchage, le thermofixage, le sanforisage ou tout autre moyen approprié et durable, au besoin, pour obtenir les propriétés désirées définies dans les tableaux applicables de la spécification relative au tissu. La main des tissus prescrits, finis et imprimés, doit être identique aux modèles réglementaires appropriés des tissus finis.

3.3.5 Infra-red Reflection (IRR). The required IRR characteristics are defined in para 3.9 and 3.10.2 and Table II of this specification, and depicted graphically in Figure I of this specification. Unless otherwise specified for the textile on order, these characteristics must be met both when manufactured (new) and after 15 laundering cycles when laundered in accordance with the method specified in the applicable cloth specification.

3.3.5 Réflectance dans l'infrarouge (RIR). Les caractéristiques de la RIR requises sont définies aux paragraphes 3.9 et 3.10.2 et dans le tableau II de la présente spécification, et elles sont représentées graphiquement dans la figure I. Sauf indication contraire pour le tissu commandé, ces caractéristiques doivent être respectées tant pour les tissus fabriqués (neufs), qu'après 15 cycles de blanchissage selon la méthode décrite dans la spécification relative au tissu.

3.3.6 Finish. No finish will be applied to obtain temporary fabric stability or temporary colour and/or IRR compliance unless required in the applicable textile specification.

3.3.6 Fini. Aucun fini ne sera appliqué pour obtenir une stabilité temporaire du tissu ou le respect temporaire de la couleur ou de la RIR, à moins qu'un tel fini ne soit prescrit dans la spécification relative au tissu.

3.3.7 Measurement Requirements.

3.3.7.1 All measurements for both colour and infra-red reflection are to be made in accordance with CIE publication 15.2 and ASTM E308.99 using CIE Illuminant C and a 2 degree observer, specular component included. These conditions of measurement must be followed and stated in all test reports.

3.3.7 Exigences relatives aux mesures.

3.3.7.1 Toutes les mesures de couleur et de réflectance dans l'infrarouge doivent être effectuées conformément aux publications CIE 15-2 et ASTM E308.99 à l'aide de l'illuminant C et de l'observateur à 2° de la CIE, composante spéculaire incluse.

3.3.7.2 Sample preparation for all chromaticity and IRR measurements shall be in accordance with AATCC Instrumental Measurement Procedure #6, A1.3, non-opaque samples. It has been found that more than one layer of self fabric is usually required to provide consistent readings. A standard black backing is recommended. It is the responsibility of the operator to determine and follow a standard

3.3.7.2 La préparation des échantillons pour toutes les mesures de couleur et de RIR doit être réalisée conformément à la procédure de mesure instrumentale n° 6 de l'American Association of Textile Chemists and Colorists (AATCC), A1.3, pour des échantillons non opaques. On a constaté que plusieurs épaisseurs de tissu extérieur sont habituellement requises pour donner une lecture

sample preparation which meets the stated onditions.

uniforme. L'emploi d'un fond noir standard est recommandé. Il incombe à l'opérateur de déterminer et de suivre un protocole standard de préparation des échantillons qui répond aux conditions énoncées.

NOTE: Referee conditions:
- diffuse spectral 8^0/hemispheral reflectance factors using a 150 mm diameter integrating sphere accessory coated with $BaSO_4$
- measurements made at 1 mm intervals over

the entire required range with a fixed spectral bandpass of 5 mm up to 860 nm and a variable spectral bandpass of <20 nm from 860 nm to 2000 nm
- measurement geometry 8^0 incidence, hemispherical collection (8^0/t), with the spectral component included
- referee sample measurement: the irradiated area to be 8 mm z 15 mm with a bandpass of 5 nm (preferred)
- where sample size or other condition dictates, irradiated area may be reduced to 4 mm x 9 mm with the bandpass also reduced to 2 nm
- where it is impractical to follow this preparation method, a single layer of the sample may be backed by NRC (National Research Council) standard black felt backing, Reference REN09870.DAT

REMARQUE: Conditions de référence:
- Facteurs de réflectance spectrale 8° / hémisphérique diffuse utilisant une sphère intégrante de 150 mm de diamètre, enduite de $BaSO_4$

- Mesures effectuées à intervalles de 1 nm sur toute la plage requise avec une bande passante spectrale fixe de 5 nm à 860 nm et une bande passante spectrale variable < 20 nm entre 860 nm et 2 000 nm
- Géométrie de mesure avec incidence de 8° et collecte hémisphérique (8°/t), composante spectrale incluse
- Mesure des échantillons de référence: la zone irradiée doit être de 8 mm x 15 mm avec une bande passante de 5 nm (de préférence)
- Lorsque la taille des échantillons ou d'autres conditions l'exigent, la zone irradiée peut être réduite à 4 mm x 9 mm et la bande passante à 2 nm
- Quand il est impossible de suivre ce protocole de préparation, on peut placer une seule épaisseur de l'échantillon contre un fond en feutre noir standard du CNRC (Conseil national de recherches du Canada), référence REN09870.DAT

3.8 Colour. The CIE LAB 1976 co-ordinates for illuminant C, 2° observer are:

3.8 Couleur. Les coordonnées CIE LAB de 1976 pour l'illuminant C et un observateur à 2° sont:

Table I Colour Coordinates for CADPAT™ (AR) Colours

Tableau I Coordonnées colorimétriques pour les couleurs du DCamC^{MC} (RA)

	L*	a*	b*
Light Sand / Sable pâle	64	1	20
Dark Sand / Sable foncé	53	6	10
Brown / Brun	34	7	13

3.8.1 Tolerance is plus/minus 2 CIE LAB units for each coordinate (L*a*b* values, not deltas). Maximum tolerance is 2 CIE LAB units.

3.8.1 La tolérance est de +/- 2 unités CIE LAB pour chaque coordonnée (valeurs L*a*b*, pas les valeurs delta). La tolérance maximale est de 2 unités CIE LAB.

3.8.2 Gloss. Gloss values shall be less than 1.5 units at 20, 60, and 85 degrees when gloss is a specified requirement. Gloss is measured in accordance with ASTM D523. The specification and/or technical requirement for the finished textile applicable to the procurement will state whether this condition applies.

3.8.2 Lustre. Les valeurs de lustre doivent être inférieures à 1,5 unité à 20°, 60° et 85° lorsque le lustre est une exigence prescrite. Le lustre est mesuré selon la norme ASTM D523. La spécification ou les exigences techniques pour le textile fini applicables à l'achat indiqueront si cette condition s'applique.

3.9 Infra-red Reflection. Infra-red values required are:

3.9 Réflectance dans l'infrarouge. Les valeurs requises pour l'infrarouge sont les suivantes:

Table II Diffuse Reflectance Factors in % for CADPAT™(AR) Colours

Tableau II Facteurs de réflectance diffuse en % pour les couleurs du DCamC^{MC}(RA)

Wavelength *Longueur d'onde*	**Light Sand / Sable pâle**			**Dark Sand / Sable foncé**			**Brown / Brun**		
	lower tolerance *tolérance inférieure*		**upper tolerance** *tolérance supérieure*	**lower tolerance** *tolérance inférieure*		**upper tolerance** *tolérance supérieure*	**lower tolerance** *tolérance inférieure*		**upper tolerance** *tolérance supérieure*
350	21.2	23.5	25.9	14.1	16	17.9	4.0	5	6.0
400	20.3	22.6	24.9	14.1	16	17.9	4.0	5	6.0
450	20.7	23	25.3	14.1	16	17.9	4.0	5	6.0
500	25.7	28.5	31.4	15.0	17	19.0	4.8	6	7.2
550	30.6	34	37.4	16.7	19	21.3	6.4	8	9.6
600	35.1	39	42.9	21.1	24	26.9	8.0	10	12.0
650	38.5	42.8	47.1	23.8	27	30.2	9.6	12	14.4
700	40.8	45.3	49.8	25.5	29	32.5	10.4	13	15.6
750	42.1	46.8	51.5	27.3	31	34.7	10.8	13.5	16.2
800	43.7	48.5	53.4	29.0	33	37.0	11.2	14	16.8
850	45.0	50	55.0	30.8	35	39.2	11.2	14	16.8
900	45.9	51	56.1	32.6	37	41.4	11.2	14	16.8
950	46.8	52	57.2	33.9	38.5	43.1	11.6	14.5	17.4
1000	47.7	53	58.3	34.8	39.5	44.2	12.0	15	18.0
1050	48.6	54	59.4	35.2	40	44.8	12.4	15.5	18.6
1100	49.5	55	60.5	35.6	40.5	45.4	12.8	16	19.2
1150	50.4	56	61.6	35.6	40.5	45.4	12.8	16	19.2
1200	50.7	56.3	61.9	35.6	40.5	45.4	12.8	16	19.2
1250	51.0	56.7	62.4	36.1	41	45.9	13.2	16.5	19.8
1300	51.3	57	62.7	36.1	41	45.9	13.6	17	20.4
1350	51.3	57	62.7	36.1	41	45.9	13.6	17	20.4
1400	51.3	57	62.7	36.1	41	45.9	13.6	17	20.4
1450	51.3	57	62.7	36.1	41	45.9	13.6	17	20.4
1500	51.3	57	62.7	36.1	41	45.9	13.6	17	20.4
1550	51.3	57	62.7	36.1	41	45.9	14.0	17.5	21.0
1600	51.3	57	62.7	36.1	41	45.9	14.4	18	21.6
1650	51.3	57	62.7	36.1	41	45.9	14.4	18	21.6
1700	51.3	57	62.7	36.1	41	45.9	14.4	18	21.6
1750	51.3	57	62.7	36.1	41	45.9	14.4	18	21.6
1800	50.4	56	61.6	35.6	40.5	45.4	14.4	18	21.6
1850	50.4	56	61.6	35.2	40	44.8	14.4	18	21.6
1900	49.5	55	60.5	34.3	39	43.7	14.4	18	21.6
1950	48.6	54	59.4	33.4	38	42.6	14.4	18	21.6
2000	47.7	53	58.3	32.6	37	41.4	14.4	18	21.6

3.10 Requirement After Laundering.

3.10 Exigence après lavage.

3.10.1 Unless otherwise specified, the colour measurements specified herein shall remain within the original tolerances (+/- 2 CIELAB units) after 15 laundering cycles, when the laundering cycles are carried out in accordance with the methodology prescribed in the applicable textile specification.

3.10.2 Unless otherwise specified, the infra-red reflectance measurements specified herein shall remain within the original tolerances (+/- 10% for light sand; +/- 12% for dark sand; +/- 20% for brown) after 15 laundering cycles, when the laundering cycles are carried out in accordance with the methodology prescribed in the applicable textile specification.

3.11 Piece Marking. Unless otherwise specified, each piece shall have a label attached to the selvedge at one end. The label shall be made of linen or heavy cardboard, with a reinforced eyelet for attaching a tying cord, and shall be legibly marked with the following information:

a) Contractor's identification (name or CA number)
b) Contract Number
c) Gross length in metres, including allowance
d) Net length in metres
e) Piece number
f) Number of lengths per piece
g) Nomenclature/Classification (textile specification)
h) Colour
j) NATO Stock Number
k) Date of manufacture

All of the above information is required when the goods are contracted for and being delivered directly to the Crown. When contracted by a third party with delivery not to the Crown, only (a), (e), (g), (h), (j), and (k) are mandatory. The other information must be readily available to the Crown and/or its contractor if required.

4. QUALITY CONTROL/INSPECTION

4.1 Unless otherwise specified in the contract or purchase order, the contractor is responsible for

3.10.1 Sauf indication contraire, les mesures de la couleur spécifiées dans les présentes doivent être à l'intérieur des tolérances d'origine (+/- 2 unités CIE LAB) après 15 cycles de lavage, lorsque ces cycles sont réalisés conformément à la méthode prescrite par la spécification applicable au tissu.

3.10.2 Sauf indication contraire, les mesures de la réflectance dans l'infrarouge prescrites aux présentes doivent respecter les tolérances d'origine (+/- 10 % pour le sable pâle; +/- 12 % pour le sable foncé; +/- 20 % pour le brun) après 15 cycles de lavage, lorsque ces cycles sont réalisés conformément à la méthode prescrite par la spécification applicable au tissu.

3.11 Marquage des pièces. Chaque pièce de tissu livrée au Canada doit porter, à une extrémité, une étiquette fixée à la lisière. L'étiquette doit être en toile de lin, en oléfine thermoliée ou en carton fort et percée d'un œillet renforcé permettant d'attacher une ficelle; elle doit porter les indications suivantes en caractères lisibles:

a) Identification de l'entrepreneur (nom ou numéro de CA)
b) Numéro du contrat
c) Longueur brute en mètres, y compris la réserve
d) Longueur nette en mètres
e) Numéro du rouleau
f) Nombre de longueurs par rouleau
g) Nomenclature/classification (spécification relative au tissu)
h) Couleur
j) Numéro de nomenclature OTAN
k) Date de fabrication

Tous les renseignements ci-dessus sont requis lorsque les marchandises sont obtenues dans le cadre d'un contrat et sont livrées directement au gouvernement. Lorsque les marchandises sont obtenues par contrat par une tierce partie sans être livrées au gouvernement, seuls les éléments a), e), g), h), j), et k) sont obligatoires. Les autres renseignements doivent être facilement accessibles pour le gouvernement ou son entrepreneur, le cas échéant.

4. CONTRÔLE DE LA QUALITÉ ET INSPECTION

4.1 Sauf indication contraire dans le contrat ou les documents d'achat, l'entrepreneur est tenu

the performance of all inspections and tests as specified herein and to demonstrate that the materiel and services conform to the requirements specified in this Specification. Contractors may utilize their own or any other inspection facility acceptable to the Crown or its designated representative.

Contractors may also utilize their own test facilities so long as Crown approval has been obtained in advance and the conditions stated in ISO quality and manufacturing publications are followed.

d'effectuer toutes les inspections et les essais prescrits ci-après afin de démontrer que les matériaux et les services sont conformes aux exigences énoncées dans la présente spécification. L'entrepreneur peut utiliser ses propres installations d'inspection ou avoir recours à toute autre installation jugée acceptable par le gouvernement ou son représentant désigné. L'entrepreneur peut également utiliser ses propres installations d'essai, pourvu qu'il ait obtenu à l'avance l'approbation du gouvernement et que les conditions décrites dans les publications de l'ISO sur la fabrication et la qualité soient respectées.

4.2 The Crown reserves the right to perform any of the inspections or tests specified herein, where such are deemed necessary to ensure the materiel and/or services submitted to the Crown for acceptance meet all requirements of the contract. This applies equally to materiel contracted for delivery directly to the Department of National Defence or as component parts to a supplier with a contract for products for Defence use.

4.2 Le gouvernement se réserve le droit d'effectuer toute vérification ou tout essai jugé nécessaire pour s'assurer que le matériel et les services présentés au gouvernement pour acceptation sont conformes à toutes les exigences énoncées dans le contrat. Ceci s'applique également au matériel obtenu sous contrat qui doit être livré directement au ministère de la Défense nationale ou comme composants livrés à un fournisseur dans le cadre d'un contrat pour des produits à des fins militaires.

4.3 Any requirement for test data to be presented at pre-contract award or at pre-production will be stated in procurement documents. Unless otherwise specified, this data shall result from tests carried out on current production, at independent certified laboratories, in full accordance with all specified test methods and conditions, and these shall be included in the laboratory reports. Bidding and/or contractual documents shall include requirements for in-contract testing including: specific tests, their frequency, their source, and their reporting procedure. At a minimum, all shipments of CADPAT™ printed textile shall be accompanied by producer laboratory reports for colour and IRR measurements. These measurements shall have been carried out on the goods being shipped and shall have been carried out on each processed batch, and at least every 5,000 metres.

4.3 Toute exigence relative aux données d'essai qui doivent être présentées à l'étape de préadjudication ou de présérie sera indiquée dans les documents d'achat. Sauf indication contraire, ces données doivent être obtenues par des essais effectués pendant la production courante dans des laboratoires indépendants accrédités, conformément à toutes les méthodes et conditions d'essai prescrites, et elles doivent figurer dans les rapports de laboratoire. Les documents d'appel d'offres ou du contrat doivent inclure les exigences relatives aux essais pendant l'exécution du contrat, y compris: la définition des essais, leur fréquence, leur source et la production des rapports. Au minimum, tous les lots de tissu DCamC^MC imprimé doivent être accompagnés des rapports de laboratoire du producteur pour les mesures de couleur et de RIR. Ces mesures doivent avoir été réalisées sur les marchandises expédiées et effectuées sur chaque lot traité, et à tout le moins, à tous les 5 000 m.

5. PACKAGING

5.1 Unless otherwise specified, packaging, packing, and marking of shipping containers shall be in accordance with the terms of the contract.

5. CONDITIONNEMENT

5.1 Sauf indication contraire, le conditionnement, l'emballage et le marquage des conteneurs d'expédition doivent être conformes aux modalités du contrat.

6. NOTES

6.1 Ordering data. Procurement documents should specify the following:

a) title, number and date of this Specification and of the textile specification
b) NATO Stock number of required item
c) Nomenclature/Classification (textile specification)
d) Pre-production requirements
e) Packaging, packing, and marking of shipping containers
f) The Design Authority
g) The Quality Assurance Authority

6.2 Definition of terms.

6.2.1 Design Authority. The Design Authority is the Government agency responsible for the technical aspects of the design and for changes to the design. The Design Authority for this requirement is the Directorate of Soldier Systems Programme Management (DSSPM), Department of National Defence.

6.2.2 Quality Assurance Authority. The Quality Assurance Authority is the Government agency responsible for providing assurance the materiel and services supplied by the contractor are in accordance with the terms of the contract. The Quality Assurance Authority is the Directorate of Quality Assurance (DQA), Department of National Defence.

6.2.3 Master Sealed Pattern. A master sealed pattern is the authorized prototype of the item to be produced and is held only by the government.

6.2.4 Sealed Pattern. The sealed pattern is a duplicate of the master sealed pattern which is the Department of National Defence's authorized prototype of the item to be produced. Sealed patterns are available for the contractor to use as a *conceptual example for production*. Contractors should note that sealed patterns may not incorporate all the details cited in this Specification and the order of precedence prevails (see para 2.4).

6. REMARQUES

6.1 Données de commande. Les documents d'achat doivent préciser:

a) le titre, le numéro et la date de la présente spécification et de la spécification relative au tissu
b) le numéro de nomenclature OTAN des articles requis
c) la nomenclature ou la classification (spécification relative au tissu)
d) les exigences de présérie
e) le conditionnement, l'emballage et le marquage des contenants d'expédition
f) l'autorité responsable de la conception
g) l'autorité responsable de l'assurance de la qualité

6.2 Définition des termes.

6.2.1 Autorité responsable de la conception. L'autorité responsable de la conception est l'organisme gouvernemental chargé des aspects techniques de la conception et des modifications connexe. Dans le cas des articles visés par la présente spécification, il s'agit de la Direction – Administration du programme de l'équipement du soldat (DAPES).

6.2.2 Autorité responsable de l'assurance de la qualité. L'autorité responsable de l'assurance de la qualité est l'organisme gouvernemental chargé d'assurer que le matériel et les services fournis par l'entrepreneur satisfont aux modalités du contrat. L'autorité responsable de l'assurance de la qualité est le directeur de l'assurance de la qualité, ministère de la Défense nationale du Canada.

6.2.3 Modèle réglementaire principal. Prototype autorisé de l'article qui doit être fabriqué et dont le gouvernement est le seul détenteur.

6.2.4 Modèle réglementaire. Copie exacte du modèle réglementaire principal, qui est le prototype autorisé par le ministère de la Défense nationale pour l'article qui doit être fabriqué. Les modèles réglementaires sont mis à la disposition de l'entrepreneur comme exemple conceptuel pour la production. Les entrepreneurs doivent prendre note que les modèles réglementaires n'incorporent pas nécessairement tous les détails indiqués aux

présentes, en cas de divergence, l'ordre de préséance mentionné au paragraphe 2.4 prévaut.

6.2.5 Specification Copies. Copies of this Specification are available from the Department of National Defence, Directorate of Soldier Systems Programme Management, Ottawa, Ontario, K1A 0K2, Attention: DSSPM 2-2.

6.2.5 Copies de la spécification. Des copies de la présente spécification peuvent être obtenues auprès du ministère de la Défense nationale, Direction de l'administration du programme de l'équipement du soldat, Ottawa (Ontario), K1A 0K2, à l'attention: DAPES 2-2.

6.3 The production of a product to this specification, or the evaluation of a product to this specification, may require the use of materials and/or equipment that could be hazardous. This specification does not purport to address all safety, health and environmental concerns, if any associated with its use. It is the responsibility of the user of this specification to establish appropriate safety, health and environmental practices and to determine the applicability of regulatory limitations prior to use.

6.3 La fabrication ou l'évaluation d'un produit conformément à la présente spécification pourrait nécessiter l'utilisation de matériel ou d'équipement dangereux. La présente spécification n'a pas pour objet de traiter de toutes les préoccupations relatives à la santé, à la sécurité et à l'environnement liées à son utilisation. Il incombe à l'utilisateur de la spécification d'établir au préalable des méthodes appropriées qui tiennent compte des questions d'environnement, de santé et de sécurité, et de déterminer les restrictions réglementaires applicables.

FIGURE I IRR REQUIREMENTS FOR CADPAT™(AR) COLOURS LIGHT SAND, DARK SAND AND BROWN

FIGURE I EXIGENCES POUR LA RIR POUR LES COULEURS SABLE PÂLE, SABLE FONCÉ ET BRUN DU DCamC^MC (RA)

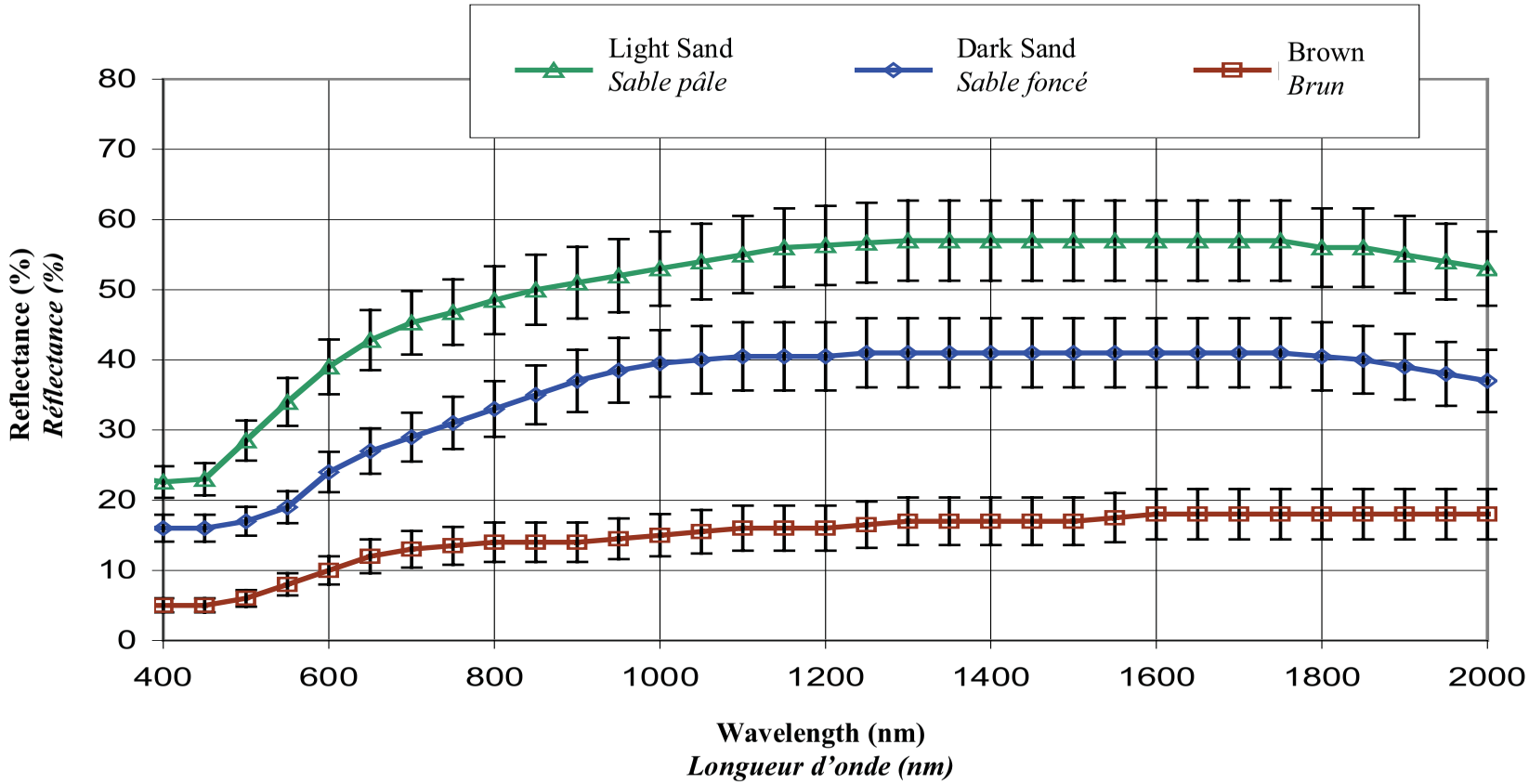

Annex / Annexe I
W8486-163089
September / septembre 2015

NOTICE

This documentation has been reviewed by the technical authority and does not contain controlled goods. Disclosure notices and handling instructions originally received with the document shall continue to apply.

AVIS

Cette documentation a été révisée par l'autorité technique et ne contient pas de marchandises contrôlées. Les avis de divulgation et les instructions de manutention reçues originalement doivent continuer de s'appliquer.

Pre-Award Evaluation Plan / Plan d'évaluation technique à l'étape de préadjudication

CONVERGED JACKET AND TROUSERS, HOT/WET WEATHER, WINDBREAKER, STATIC-DISSIPATIVE, CADPAT™

BLOUSON ET PANTALONS CONVERGENTES POUR TEMPS CHAUD OU PLUVIEUX, COUPE-VENT, ANTISTATIQUE, DCamC^MC

Pre-Award Evaluation Plan for the Jacket and Trousers Hot/Wet Weather, Windbreaker, Static-Dissipative (SD), CADPAT™

1.0 General.

1.1 **Pre-Award Evaluation Plan**. This annex describes how The Department of National Defence (DND) will perform the pre-award evaluation of the Jacket and Trousers Hot/Wet Weather, Windbreaker, Static-Dissipative (SD), CADPAT™ in terms of evaluating physical samples for the quality of workmanship and for their ability to demonstrate capability to meet requisite technologies, and for conformance to specified materials and measurements outlined in **Annex B and Annex C**. The pre-award evaluation will be done through a technical verification performed by a team of DND Subject Matter Experts (SMEs) with the exception for the conformance to specified materials which will be proven by the submission from the Contractor with the appropriate test results from accredited independent laboratories or, when stated, Certificate(s) of Compliance (C of C).

2.0 Pre-Award Samples, Supporting Documentation, and Evaluation.

2.1 Pre-Award Samples. As part of the evaluation, to confirm a Contractor's capability of meeting the technical requirements, the following pre-award samples must be submitted:

Table I – Physical Samples To Be Submitted At Pre-Award

Time Period	Requirement
Pre-Award Stage	One (1) sample of the Jacket, Hot/Wet Weather in size 7040.
Pre-Award Stage	One (1) sample of the Trousers, Hot/Wet Weather in size 7034.

2.1.1 **Material Substitutions**. In the event that a component (hook and loop fastener, slide fastener, cord, etc. excluding the textiles identified in the **excluding the textiles identified in Annex J that require yardage/samples and testing at the pre-award stage**) is not available to the bidder in the time frame to manufacture the physical samples, the bidder may use a similar substitute component, on the condition that a letter addressing the substitution is submitted with the pre-award samples, together with a statement that, should the bidder be awarded the contract, all materials will be strictly in accordance with the technical requirement outlined in **Annex B** or **Annex C**.

2.2 **Workmanship and Construction Evaluation**. As part of the evaluation, to confirm a Contractors' submission for the quality of workmanship and for the ability to demonstrate capability to meet requisite technologies, the workmanship and construction will be evaluated using the criteria outlined in **Table II**.

3.0 **Definitions.**

3.1 **Deviation**. A deviation is defined as a non-compliance of an essential performance or design requirement outlined in **Annex B (Jacket)** or **Annex C (Trousers)**.

3.2 **Infraction**. An infraction is defined as a workmanship or construction issue evaluated to be non-compliant that directly affects serviceability of the garment.

3.3 **Observation**. An observation is defined as a workmanship or construction issue evaluated to be non-compliant that does not necessarily affect serviceability of the garment but affects overall quality assurance.

3.4 **Maximum Infractions**. No workmanship and construction deviations will be accepted in any of the pre-award samples. A maximum of three (3) workmanship and construction infractions will be accepted in any of the pre-award samples. Observations will be noted and referenced in the pre-award evaluation to then be corrected at pre-production. **Workmanship or construction issues found with the submission not listed in Table II will be deemed as an observation**.

Table II – Workmanship and Construction Evaluation – Jacket and Trousers

Detail	Reference		Criteria	Classification of Infraction[1]		
	Annex B (Jacket)	Annex C (Trousers)		Deviation	Infraction	Observation
Cutting	3.5.2	3.5.2	Shell parts of the Jacket and Trousers are not cut in the direction of the warp as shown on the paper patterns.			X

[1]The classification of "infraction" is for the purposes of evaluation only.

Detail	Reference		Criteria	Classification of Infraction[1]		
	Annex B (Jacket)	Annex C (Trousers)		Deviation	Infraction	Observation
Sewing	3.6	3.6	• Seams twisted, pleated, or puckered; • Part of the ensemble caught in any unrelated operation or stitching; • Thread breaks not secured; • Cut threads or holes showing evidence of reworking		X	
			• Ends of seams and stitches (when not caught in other seams or stitching) not back stitched or bartacked; • Sewing defects causing open seams of more than ¼ inch (0.635 cm). • Thread colour is not in accordance with that specified		X	
			• Gauge of stitching uneven (seams, hems or top stitching); • Stitch tension: 1. Loose tension in any area more than 2-inches (5.1 cm); 2. Tight tension (stitches break when normal strain is applied to the seam or stitching);		X	
Hook and Loop Fastener Tape	3.6.8	3.6.7	• Hook and loop fastener tape is not stitched and positioned as detailed in para 3.7 Construction; • Stitching is not formed <u>into</u> the hook and loop portion of the tape; • Hook and loop is not positioned to effect proper closure of assembly (i.e. non-functional).			X
Bartacks	3.6.9	3.6.8	• Bartacks are not positioned as detailed in para 3.7 Construction or as show on applicable Figures; • Insecure bartacks or not serving intended purpose; • Loose, incomplete or broken stitches.			X

Detail	Reference		Criteria	Classification of Infraction[1]		
	Annex B (Jacket)	Annex C (Trousers)		Deviation	Infraction	Observation
Seam Sealing	3.6.13	3.6.11	• Seams will be visually examined for: 1. Tape which is not centered across the width of the seam; 2. Delamination along edges of tape, over seam allowance and stitching or across the width of the tape; 3. Bubbling; 4. Blistering; 5. Puckering; 6. Melting; 7. Ends of threads which have not been trimmed.		X	
			• Ends and joins will be visually examined for: 1. Loose ends and corners which have not bonded; 2. Rough edges or beads at the ends; 3. An overlap at a join of less than 3/4-inch (19.1 mm).		X	
			• Drill holes and stitching lines that are not in seams will be visually examined to determine if they have been left uncovered without a designated exception.		X	
			• Stiffness of seamed area will be visually examined for any marked increase of stiffness		X	
Scale of Measurements	3.8	3.8	• Measurements out of tolerance from that detailed in the Scale of Measurements (Table I).		X	
Component Measurements	3.8	3.8	• Measurements with tolerances exceeding **plus or minus** 1/4-inch (6.35 mm) from that detailed in applicable Figures. This includes, but is not limited to, positioning on garment and functional lengths.		X	
Marking, Care, and User Labels	3.10 & 3.11	3.10 & 3.11	• Labeling omitted, incorrect, illegible, or incomplete.			X

Detail	Reference		Criteria	Classification of Infraction[1]		
	Annex B (Jacket)	Annex C (Trousers)		Deviation	Infraction	Observation
Construction - General	3.7	3.7	• Thread ends not trimmed throughout the garment; • Needle chews likely to develop into a hole; • Cuts, tears, holes, mends, lumps, creases, weak places, or other deficiencies seriously affected serviceability;			X
			• Components missing or wrong size of component used; • Any operation improperly performed.			X
			• Any draw cord caught in the hem, casing, or tunnel stitching restricting the functionality of the assembly; • Any draw cord ends not knotted and/or fused; • Any draw cord insufficient in length for function.			X
			• Any part of slide fastener assembly bent, broken, or otherwise defective; • Any part of the slide fastener not attached to the assembly. • Snap fasteners are difficult to open or close			X

Plan d'évaluation technique à l'étape de préadjudication pour les blousons et les pantalons convergentes pour temps chaud ou pluvieux, coupe-vent, antistatique, DCamC^{MC}

4.0 Généralités

4.1 Plan d'évaluation. La présente annexe décrit la façon dont le ministère de la Défense nationale (MDN) effectuera l'évaluation technique à l'étape de préadjudication des blousons et des pantalons convergentes pour temps chaud ou pluvieux, coupe-vent, antistatique, DCamC^{MC}. c'est-à-dire l'évaluation d'échantillons physiques en ce qui concerne la qualité d'exécution, la conformité aux technologies requises, aux matériaux spécifiés et aux mesures indiquées à l'annexe B et C. La portion technique du plan d'évaluation de préadjudication sera effectuée au moyen d'une vérification technique réalisée par une équipe d'experts en la matière du MDN, sauf en ce qui concerne la conformité aux matériaux spécifiés qui sera établie sur la base des résultats d'essais appropriés réalisés par des laboratoires accrédités indépendants sur des échantillons reçus de l'entrepreneur ou, le cas échéant, des certificats de conformité.

5.0 Échantillons de préadjudication, documents pertinents et évaluation.

5.1 **Échantillons de préadjudication**. Dans le cadre de l'évaluation, pour confirmer la capacité du soumissionnaire à satisfaire aux exigences techniques et aux exigences de rendement, les échantillons de préadjudication indiqués au tableau I doivent être soumis.

Tableau I – Échantillons physiques à soumettre à l'étape de préadjudication

Étape	Exigence
Préadjudication	Une (1) échantillon du blouson pour temps chaud ou pluvieux dans la taille 7040.
Préadjudication	Une (1) échantillon des pantalons pour temps chaud ou pluvieux dans la taille 7034.

5.1.1 **Substitutions de matériau.** Dans les cas où un soumissionnaire n'a pas accès à un composant (fermeture autoaggripante à boucles et à crochets, sangle, etc. **à l'exception des textiles mentionnés à l'annexe J qui nécessitent du métrage ou des échantillons et des essais à l'étape préalable à l'adjudication du contrat**) dans le délai alloué pour la fabrication des échantillons, le soumissionnaire peut utiliser un composant substitut similaire, à la condition de joindre une lettre à l'échantillon expliquant la substitution, de même qu'une

déclaration par laquelle le fournisseur s'engage, dans l'éventualité où il serait retenu, à se conformer strictement aux exigences techniques visant les matériaux dans **l'annexe B ou l'annexe C.**

5.2 **Évaluation de la qualité d'exécution et de la fabrication**. Dans le cadre de l'évaluation, pour confirmer la qualité d'exécution des échantillons soumis par le soumissionnaire et la capacité de ce dernier à démontrer sa conformité aux technologies requises, la qualité d'exécution et la fabrication seront évaluées selon les critères énoncés au tableau II.

6.0 **Définitions.**

6.1 **Écart**. On entend par écart, une non-conformité à une exigence de rendement ou de conception essentielle indiquée à l'**annexe B (blouson) ou l'annexe C (pantalons)**.

6.2 **Infraction**. On entend par infraction, un problème de qualité d'exécution du travail ou de fabrication jugé comme étant une non-conformité susceptible de nuire directement à la tenue en service du vêtement ou ayant des incidences sur l'assurance de la qualité générale.

6.3 **Observation**. On entend par observation, un problème de qualité d'exécution du travail ou de fabrication jugé comme étant une non-conformité ne nuisant pas nécessairement à la tenue en service du vêtement mais ayant des incidences sur l'assurance de la qualité générale.

6.4 **Infractions maximales**. Aucune infraction critique ni infraction liée à la qualité de l'exécution du travail ou à la fabrication ne seront acceptées pour les échantillons de préadjudication. Un maximum de trois (3) infractions liées à la qualité d'exécution du travail et à la fabrication sera accepté pour tout échantillon de préadjudication. Les observations seront prises en note et incorporées dans l'évaluation de préadjudication pour être corrigées pendant la production. Les problèmes de qualité d'exécution ou de fabrication qui auront été incorporés à la soumission, mais qui ne figurent pas au tableau II, seront considérés comme des observations.

Tableau II – Évaluation de la qualité d'exécution et de la confection pour le blouson et les pantalons

Détail	Référence		Critère	Classement de l'infraction[2]		
	Annexe B (blouson)	Annexe C (pantalons)		Écart	Infraction	Observation
Coupe	3.5.2	3.5.2	Les parties en tissu extérieur du blouson et des pantalons ne sont pas taillées dans le sens de la chaîne, comme il est indiqué sur les patrons de papier.			X

[2]Le classement de l'infraction ne sert qu'à des fins de l'évaluation.

Détail	Référence		Critère	Classement de l'infraction[2]		
	Annexe B (blouson)	Annexe C (pantalons)		Écart	Infraction	Observation
Couture	3.6	3.6	• Coutures tournantes, plissées ou froncées; • Une partie de l'ensemble pris dans un opération ou couture non relatif; • Fils cassés qui ne sont pas assortis; • Fils coupés ou trous qui présentant des signes de reprise.		X	
			▪ Les extrémités des coutures et des piqûres (lorsqu'ils ne sont pas capturés dans d'autres coutures ou piqures) ne sont pas arrêtées par des points arrière ou points d'arrêts; ▪ Les defauts de couture qui causent de coutures ouvertes de plus de 0,635 cm (¼ po). • La couleur du fil n'est pas comme elle est specifiée;		X	
			• La calibre des coutures ne sont pas égales (coutures, ourlets ou surpiqures); • Tension du fil: 1. Tension lâche dans un endroit plus de 5,1 cm (2 po); 2. Tension serrée (points cassent lorsque une allongement normale est appliquée à la couture ou la piqure);		X	
Ruban autoagrippant à boucles et à crochets	3.6.8	3.6.7	• Le ruban autoagrippant à boucles et à crochets n'est pas positionné et cousue comme il est indiquée à l'article 3.7 Confection; ▪ Les piqûres ne sont pas exécutées <u>dans</u> les parties boucles et crochets du ruban; • Le ruban autoagrippant à boucles et à crochets n'est pas alignés pour effectuer la fermeture utile de l'assemblé (ex. non fonctionnelle).			X

Détail	Référence		Critère	Classement de l'infraction[2]		
	Annexe B (blouson)	Annexe C (pantalons)		Écart	Infraction	Observation
Brides d'arrêt	3.6.9	3.6.8	• Les brides d'arrêt ne sont pas positionner comme il est indiquer dans l'article 3.7 Confection ou selon les figures applicables; • Brides d'arrets qui sont détendu ou qui ne servent pas d'usage prévu • les points sont lâches, incomplets ou brisés			X
Scellage des coutures	3.6.13	3.6.11	• Les coutures seront examinées visuellement pour: 1. Ruban qui n'est pas centré par rapport à la largeur de la couture; 2. Décollement le long des bords du ruban, sur la réserve de couture et la piqûre ou sur la largeur du ruban; 3. Formation de bulles; 4. Cloquage; 5. Plissage; 6. Fusion; 7. Extrémités des fils non coupées.		X	
			• Les extremités et jonctions seront examinés visuellement pour: 1. Coins et extrémités libres qui ne sont pas collés; 2. Boucles ou bords rugueux aux extrémités; 3. Chevauchement de moins de 19,1 mm (¾ po) à une jonction.		X	
			• Trous et lignes de piqures qui ne sont pas dans les coutures seront examinés visuellement pour déterminer s'ils sont laissés non couvert sans justification par une exception designée.		X	

Détail	Référence		Critère	Classement de l'infraction[2]		
	Annexe B (blouson)	Annexe C (pantalons)		Écart	Infraction	Observation
Scellage des coutures (cont'd)	3.6.13	3.6.11	• La rigidité de l'endroit cousu sera examinée visuellement pour augmentation marquée de la rigidité.		X	
Tabelau des mesures	3.8	3.8	• Les mesures qui sont hors de la tolérance spécifier dans le tableau des mesures (tableau I).		X	
Mesures des composants	3.8	3.8	• Les mesures avec les tolérances dépassant **plus ou moins** de 6,35 mm (1/4-po) comme il est indiqué selon les figures applicables. Cela inclut, mais sans s'y limiter, le positionnement sur le vêtement et les longueurs fonctionnelles.		X	
Marquage, étiquettes d'entretien et de l'utilisateur	3.10 et 3.11	3.10 et 3.11	• Étiquetage omis, erroné, illisible ou incomplet.			X
Confection - générale	3.7	3.7	• Extremités des fils non pas coupés à travers du vetement; • Les maches d'aiguilles qui peuvent developer en trous; • Coupures, déchirures, trous, reprises, grumeaux, plis, endroits faibles ou d'autres déficiences qui peuvent nuire à la tenue en service du vêtement			X
			• Composants manquants ou mauvais grandeur utilizé; • Toutes opérations executées de facon incorrecte.			X

Détail	Référence		Critère	Classement de l'infraction[2]		
	Annexe B (blouson)	Annexe C (pantalons)		Écart	Infraction	Observation
Confection - générale (cont'd)	3.7	3.7	• Tous cordons de tirage pris dans les coutures de l'ourlet, l'enveloppe, ou le tunel qui peuve affecter la vontionnalite de l'ensemble; • Tous cordons de tirage qui ne sont pas noués et / ou fusionnés; • Tous cordons de tirage insuffisants dans la longueur pour fonctionner comme il faut.			X
			• Toutes parties tordues, cassées ou autrement défectueux de l'assemblage de la fermeture à glissière; • Toutes parties qui ne sont pas attachées à l'assemblage de la fermeture à glissière; • Boutons pressions sont difficile à ouvrir ou fermer.			X

PREAWARD REQUIREMENTS - TEXTILES

1. General Information

1.1 All tests and test methods must be in accordance with the specified requirements. All testing must be conducted by an accredited independent laboratory familiar with textile testing. Testing carried out by university textile testing laboratories will also be acceptable. Should a non-accredited laboratory be required for specific tests, approval must be sought and received in writing from the Technical Authority in advance.

1.2 When a fabric sample is required, the sample must be clearly identified and traceable to production lots. When required, the Contractor must be able to provide the Quality Assurance documentation to assure the fact that the test results were obtained on fabric from the same production as the submitted sample.

1.3 Although reporting of test results for all properties may not be required for some items, it is mandatory that the requirements be met in accordance with the applicable specification. The Crown reserves the right to carry out testing of any specified property in order to confirm the compliance of the fabric with the applicable specification in its entirety.

2. Pre-Award Requirements DSSPM 2-2-80-209, Cloth, Nylon, Tri-laminate, 185 g/m^2, Static-Dissipative, Waterproof, Moisture Vapour Permeable

2.1 Test results in accordance with Table I and Table II of DSSPM 2-2-80-209 must be reported for the following properties:

EXIGENCES PRÉALABLES À L'ADJUDICATION - TEXTILES

1. Renseignements généraux

1.1 Tous les essais et toutes les méthodes d'essai doivent être conformes aux exigences prescrites. Les essais doivent être menés par un laboratoire indépendant accrédité ayant une bonne expérience des essais textiles. Les essais réalisés par des laboratoires universitaires effectuant des essais textiles seront aussi acceptables. Si un laboratoire non accrédité menait certains essais, il faudrait obtenir au préalable l'autorisation écrite de l'autorité technique.

1.2 Lorsqu'un échantillon de tissu est nécessaire, il doit être clairement identifié et être traçables aux des lots de production. Lorsque c'est prescrit, l'entrepreneur doit pouvoir fournir la documentation d'assurance de la qualité garantissant que les résultats des essais ont été obtenus avec le tissu provenant du même lot de production que l'échantillon soumis.

1.3 Même s'il n'est parfois pas nécessaire de présenter un rapport sur les résultats d'essai pour certains articles, il est obligatoire que les exigences soient respectées conformément à la spécification applicable. Le gouvernement se réserve le droit de mettre à l'essai n'importe laquelle des propriétés afin de s'assurer de la conformité du tissu à toutes les exigences de la spécification applicable.

2. Exigences préalables à l'adjudication DSSPM 2-2-80-209, Tissu de nylon, antistatique, triple épaisseur, 185 g/m^2, imperméable a l'eau, perméable à la transpiration

2.1 Les résultats des essais selon le Tableau I et le Tableau II du document DSSPM 2-2-80-209 doivent être rapportes pour les propriétés suivants:

Table I
a) mass
b) puncture resistance
c) hydrostatic resistance (initial)
d) moisture vapour permeability (initial)
e) static decay (initial)
f) oil repellency
g) water repellency
h) resistance to chemicals - DEET liquid
i) colour and IRR (DSSPM 2-2-80-500)

Table II
a) peel strength
b) hydrostatic resistance (initial)
c) delamination after 5 washes

2.2 Test reports and testing must be dated and completed within 6 months of the Request for Proposal.

2.3 Submission of one (1) meter full width fabric sample of the proposed product is required.

3. Pre-Award Requirements
DSSPM 2-2-80-052, Cloth, Taffeta, Nylon, 88 g/m^2, Type II

3.1 A Certificate of Compliance (C of C)[note 1] for the properties listed in DSSPM 2-2-80-052.

4. Pre-Award Requirements
DSSPM 2-2-80-210, Cloth, Coated, Nylon/Polyurethane, 235 g/m^2

4.1 A Certificate of Compliance (C of C)[note 1] for the properties listed in DSSPM 2-2-80-210 and DSSPM 2-2-80-500.

[Note 1] A Certificate of Compliance (C of C) is a written statement from the supplier guaranteeing the compliance of the proposed product to the specification, or portion thereof, referenced. This document must be on official company stationary; it must be current; it must make reference to the applicable specification and have the original signature of the company's designated representative. The Crown reserves the right to verify the statements made in the C of C. Full test results, demonstrating the product's compliance, will be accepted in lieu of a C of C.

Tableau I
a) masse
b) résistance aux perforations
c) pénétration d'eau à haute pression
d) perméabilité a la transpiration
e) détérioration statique
f) oléofugation
g) déperlance
h) résistance au substances chimiques - DEET en liquide
i) couleur et RIR (DSSPM 2-2-80-500)

Table II
a) résistance au pelage
b) pénétration d'eau a haute pression
c) déamination après 5 lavages

2.2 Les rapports sur les resultats d'essai et les essais doit être daté et accomplis dans les six mois de la Demand de Proposition.

2.3 En ce qui concerne le tissu proposé, il faut en soumettre un échantillon plein largeur d'un (1) mètre.

3. Exigences préalables à l'adjudication
DSSPM 2-2-80-052, Taffetas de nylon, 88 g/m^2, Type II

3.1 Un certificat de conformité (CC)[remarque 1] pour les caractéristiques indiquées dans DSSPM 2-2-80-210.

4. Exigences préalables à l'adjudication
DSSPM 2-2-80-210, Tissu du nylon enduit de polyuréthane, 235 g/m^2

4.1 Un certificat de conformité (CC)[remarque 1] pour les caractéristiques indiquées dans DSSPM 2-2-80-210 et DSSPM 2-2-80-500.

[Remarque 1] Un certificat de conformité (CC) est une attestation écrite du fournisseur garantissant une conformité du produit proposé à la spécification, ou à une partie de celle-ci, citée en référence. Ce document doit être produit sur le papier officiel de l'entreprise, il doit être valide, faire référence à la spécification applicable et porter la signature originale du représentant désigné de l'entreprise. Le gouvernement se réserve le droit de vérifier les déclarations faites sur le certificat de conformité. Les résultats des essais complets, démontrant la conformité du produit, seront acceptés au lieu du certificat de conformité.

TEXTILES TESTING – PRE-PROPRODUCTION AND PRODUCTION REQUIREMENTS
For

DSSPM 2-2-80-209
Cloth, Nylon, Tri-laminate, 185 g/m^2, Static-Dissipative, Waterproof, Moisture Vapour Permeable

DSSPM 2-2-80-052
Cloth, Taffeta, Nylon, 88 g/m^2, Type II

DSSPM 2-2-80-210
Cloth, Coated, Nylon/Polyurethane, 235 g/m^2

ESSAIS DE TEXTILES – EXIGENCES RELATIVES PRÉALABLES À LA PRODUCTION ET À LA PRODUCTION

DSSPM 2-2-80-209
Tissu de nylon, antistatique, triple épaisseur, 185 g/m^2, imperméable a l'eau, perméable à la transpiration

DSSPM 2-2-80-052
Taffetas de nylon, 88 g/m^2, Type II

DSSPM 2-2-80-210
Tissu du nylon enduit de polyuréthane, 235 g/m^2

1. General Information

1.1 Tests and tests results are required on each textile at the frequency stated below, before the material is delivered to the Crown or put into garment production, if contractor supplied textile. Complete test results must also be submitted before the material is put into garment production when there is any change in the source of supply for the material(s). Department of National Defence (DND) written approval is required prior to using any material from a new supplier.

1.2 All tests and test methods must be in accordance with the specified requirements. All testing must be conducted by an accredited independent laboratory familiar with textile testing. Testing carried out by university textile testing laboratories will also be acceptable. Should a non-accredited laboratory be required for specific tests, approval must be sought and received in writing from the Technical Authority in advance.

1.3 When a fabric sample is required, the sample must be clearly identified and traceable to production lots. When required, the Contractor must be able to provide the Quality Assurance documentation to assure the fact that the test results wer obtained on fabric from the same production as the submitted sample.

1.4 Although reporting of test results for all properties is not required for some items at a certain stage, it is mandatory that the requirements be met in accordance with the applicable specification. The Crown

1. Renseignements généraux

1.1 Des essais et des résultats d'essai sont exigés pour chaque textile à la fréquence prescrite ci-dessous, avant que le tissu soit livré au gouvernement ou avant qu'il puisse être utilisé pour la production du vêtement, si le tissu en question est fourni par l'entrepreneur. Les résultats complets des essais doivent aussi être soumis avant que le tissu soit utilisé pour la production du vêtement en cas de changement de la source d'approvisionnement. L'approbation écrite du ministère de la Défense nationale (le MDN) est nécessaire avant d'utiliser un matériau provenant d'un nouveau fournisseur.

1.2 Tous les essais et toutes les méthodes d'essai doivent être conformes aux exigences prescrites. Les essais doivent être menés par un laboratoire indépendant accrédité ayant une bonne expérience des essais textiles. Les essais réalisés par des laboratoires universitaires effectuant des essais textiles seront aussi acceptables. Si un laboratoire non accrédité menait certains essais, il faudrait obtenir au préalable l'autorisation écrite de l'autorité technique.

1.3 Lorsqu'un échantillon de tissu est nécessaire, il doit être clairement identifié et être traçables aux des lots de production. Lorsque c'est prescrit, l'entrepreneur doit pouvoir fournir la documentation d'assurance de la qualité garantissant que les résultats des essais ont été obtenus avec le tissu provenant du même lot de production que l'échantillon soumis.

1.4 Même s'il n'est parfois pas nécessaire de présenter un rapport sur les résultats d'essai pour certains articles, il est obligatoire que les exigences soient respectées conformément à la spécification applicable. Le

reserves the right to carry out testing of any specified property in order to confirm the compliance of the fabric with the applicable specification in its entirety.

1.5 The pre-production testing and sample must be from the production that is intended for use in this current contract, so are production sample and testing. The pre-production samples must be representative of the finished product in all respects.

2. Pre-Production Requirements

2.1 Prior to commencing garment production, full test results in accordance with DSSPM 2-2-80-209, DSSPM 2-2-80-210 and DSSPM 2-2-80-052, including DSSPM 2-2-80-500, for the fabric production lots that will be used in garment production must be reported.

2.2 Submission of two (2) meters full width fabric sample of DSSPM 2-2-80-209, DSSPM 2-2-80-210 and DSSPM 2-2-80-052 is required.

3. Production Requirements

3.1 For each 10,000 metres of production of each fabric used in garment production, full test results in accordance with DSSPM 2-2-80-209, DSSPM 2-2-80-210 and DSSPM 2-2-80-052, including DSSPM 2-2-80-500, must be reported.

3.2 For each 10,000 metres of production of each fabric used in garment production, a one (1) meter full width fabric sample is required for each new production lot and/or print run of each applicable fabric.

gouvernement se réserve le droit de mettre à l'essai n'importe laquelle des propriétés afin de s'assurer de la conformité du tissu à toutes les exigences de la spécification applicable.

1.5 Les résultats d'essai et l'échantillon de présérie, de même que les résultats d'essai et l'échantillon de production, doivent provenir du tissu que le soumissionnaire prévoit utiliser pour le présent contrat. Les échantillons de présérie doivent être représentatifs du produit fini sous tous les rapports.

2.0 Exigences préalables à la production

2.1 Avant le début de la production en série du vêtement, il faut présenter des rapports sur les résultats complets des essais effectués conformément aux documents DSSPM 2-2-80-209, DSSPM 2-2-80-210 et DSSPM 2-2-80-052, incluent DSSPM 2-2-80-500, pour le lot de tissu qui servira à la production du vêtement.

2.2 Pour chaque tissue, il faut soumettre un échantillon de tissu pleine largeur de deux (2) mètres.

3.0 Exigences relatives à la production

3.1 Pour chaque 10,000 mètres de production de chaque tissu utilisé pour la production de vêtement, il faut présenter un rapport sur les résultats complets des essais effectués conformément aux documents applicable, DSSPM 2-2-80-209, DSSPM 2-2-80-210 et DSSPM 2-2-80-052, incluant DSSPM 2-2-80-500 .

3.2 Pour chaque 10,000 mètres de production de chaque tissu utilisé pour la production de vêtement, il faut soumettre un échantillon de tissu pleine largeur d'un (1) mètre.

REQUIREMENT FOR SPECIAL SIZES

The term "special size" is defined as those sizes outside the realm of the scale of measurements presently held in order to obtain a proper fit. The Department of National Defence will supply the following body measurements with every order:

a. Height without shoes;
b. Chest / bust circumference;
c. Waist circumference;
d. Hip circumference (women only);
e. Neck circumference;
f. Sleeve length;
g. Inseam: and
h. Alteration notes, if required.

Paper patterns for special size garments shall be the responsibility of the bidder. Special size garments shall be made in full technical compliance with the technical data included as Annexes to this requisition. Please refer to Annex L (Size Roll) for the NATO Stock Number for the special size.

CONDITION POUR DES TAILLES SPÉCIALES

L'expression "taille spéciale" est décrite comme étant les tailles qui sont définies en dehors de l'éventail de l'échelle des mesures qui est présentement détenu pour un bon ajustage. Le ministère de la Défense nationale fournira les mensurations suivantes avec chaque commande :

a. Hauteur sans chaussures;
b. Tour du thorax/du buste;
c. Tour de taille;
d. Tour des hanches (femmes seulement);
e. Tour du cou;
f. Longueur de la manche;
g. Couture d'entrejambes. et
h. Les remarques d'ajustements, si nécessaire.

Les patrons de papier pour les vêtements de taille spéciale doivent être la responsabilité du soumissionnaire. Les vêtements de taille spéciale devront être confectionnés conformément aux données techniques qui sont incluses en tant qu'annexes à cette demande. Veuillez se référer à l'annexe L (roulement de taille) pour le nombre courant de l'OTAN pour la taille spéciale.

Annex / annexe L
W8486-163089
Size Roll / Roulement des tailles
September / septembre 2015

JACKET, HOT/WET WEATHER, CADPAT TW - BLOUSON POUR TEMPS CHAUD OU PLUIEUX, DCAMC RBT AA 8415-20-001-7150		
NSN	**SIZE**	**To Order**
*200017151	6432	650
*200017152	6436	1000
*200017153	6440	350
*200017154	6736	3000
*200017155	6740	2000
*200017156	6744	0
*200017157	6748	0
*200017158	7036	2300
*200017159	7040	700
*200017160	7044	0
*200017164	7048	0
*200017165	7052	0
*200017167	7336	1000
*200017171	7340	2000
*200017173	7344	200
*200017181	7348	0
*200017183	7352	0
*200017184	7640	200
*200017185	7644	0
*200017188	7648	0
*200017189	7652	0
TOTAL ORDER		13,400

TROUSERS, H/W WEATHER, CADPAT TW / PANTALONS POUR TEMPS CHAUD OU PLUVIEUX, DCAMC RBT - AA 8415-20-001-7213		
NSN	**SIZE**	**To Order**
*200017214	6426	300
*200017216	6430	700
*200017217	6434	300
*200017218	6730	2000
*200017220	6734	3000
*200017221	6738	0
*200017222	6742	0
*200017240	7030	1500
*200017241	7034	1000
*200017242	7038	0
*200017243	7042	0
*200017244	7046	0
*200017245	7330	0
*200017246	7334	1000
*200017247	7338	0
*200017248	7342	0
*200017249	7346	0
*200017250	7634	0
*200017251	7638	0
*200017252	7642	0
*200017253	7646	0
TOTAL ORDER		9,800

Annex / annexe L
W8486-163089
Size Roll / Roulement des tailles
September / septembre 2015

JACKET, HOT/WET WEATHER, CADPAT TW - BLOUSON POUR TEMPS CHAUD OU PLUIEUX, DCAMC RBT AA 8415-20-001-7150		
NSN	**SIZE**	**To Order**
*200017151	6432	650
*200017152	6436	1000
*200017153	6440	350
*200017154	6736	3000
*200017155	6740	2000
*200017156	6744	0
*200017157	6748	0
*200017158	7036	2300
*200017159	7040	700
*200017160	7044	0
*200017164	7048	0
*200017165	7052	0
*200017167	7336	1000
*200017171	7340	2000
*200017173	7344	200
*200017181	7348	0
*200017183	7352	0
*200017184	7640	200
*200017185	7644	0
*200017188	7648	0
*200017189	7652	0
TOTAL ORDER		13,400

TROUSERS, H/W WEATHER, CADPAT TW / PANTALONS POUR TEMPS CHAUD OU PLUVIEUX, DCAMC RBT - AA 8415-20-001-7213		
NSN	**SIZE**	**To Order**
*200017214	6426	300
*200017216	6430	700
*200017217	6434	300
*200017218	6730	2000
*200017220	6734	3000
*200017221	6738	0
*200017222	6742	0
*200017240	7030	1500
*200017241	7034	1000
*200017242	7038	0
*200017243	7042	0
*200017244	7046	0
*200017245	7330	0
*200017246	7334	1000
*200017247	7338	0
*200017248	7342	0
*200017249	7346	0
*200017250	7634	0
*200017251	7638	0
*200017252	7642	0
*200017253	7646	0
TOTAL ORDER		9,800

PRE-CONTRACT AWARD,
PRE-PRODUCTION, AND PRODUCTION
TECHNICAL REQUIREMENTS FOR
CONVERGED JACKET AND TROUSERS, HOT/WET WEATHER,
STATIC DISSIPATIVE, CADPAT™

1. PRE-CONTRACT AWARD TECHNICAL REQUIREMENTS

a. Physical Samples - As part of the technical evaluation to confirm a bidder's capability of meeting the technical requirements, one (1) pre-award sample of the garment is required with the bid. A pre-award sample is required from all bidders. **The size submitted shall be 7040 for the jacket and 7034 for the trousers.**

The bidder shall ensure that the required pre-award samples are manufactured in accordance with the technical requirement of this requisition and are fully representative of the bid submitted. The samples will be evaluated for quality of workmanship, conformance to specified materials and measurements, and shall demonstrate capability to meet requisite technologies.

In the event that a component (hook and loop fastener, slide fastener, cord, etc. **excluding the textiles identified in Annex J that require yardage/samples and testing at the pre-award stage**) is not available to the bidder in the time frame to manufacture the physical samples, the bidder may use a similar substitute component, on the condition that a letter addressing the substitution is submitted with the pre-award samples, together with a statement that, should the bidder be awarded the contract, all materials will be strictly in accordance with the technical requirement.

b. Laboratory Analysis - In addition, laboratory analysis of the product offered showing test results for specific tests listed at **Annex J** shall be provided with the pre-award samples.

2. PRE-PRODUCTION TECHNICAL REQUIREMENTS

a. Physical Samples – A pre-production samples of the garments shall be required from the Contractor unless waived by the DND Technical Authority. Pre-production samples shall be completely representative of the final production, being made from parts and materials as specified and by equipment and processes which will be used in quantity production. The pre-production sample shall be **fully compliant** to the technical requirement of this requisition. **One (1) Jacket, Hot/Wet Weather, Windbreaker, Static-Dissipative, CADPAT TW in size 7040 and one (1) Trousers, Hot/Wet Weather, Windbreaker, Static-Dissipative, CADPAT TW in size 7034, shall be required at the pre-production stage.**

b. Laboratory Analysis -In addition, laboratory analysis in accordance with those requirements detailed in **Annex J** shall be submitted. In addition to those materials covered in **Annex J**, the following certificates of compliance shall be submitted at the pre production stage:

- **Lining for the lower portion of the sleeve and upper body and pocket bags for the hidden front chest pockets** Annex B, para 3.4.4
- **Hook and loop fastener tape** Annex B para 3.4.6 and Annex C, para 3.4.4
- **Slide fasteners** Annex B para 3.4.7 and Annex C, para 3.4.5
- **Drawcord** Annex C, para 3.4.8
- **Reflector tape** Annex B, para 3.4.8 and Annex C, para 3.4.6
- **Webbing tape** Annex B, 3.4.9
- **Herringbone twill tape** Annex B, para 3.4.10 and Annex C, para 3.4.7
- **Elastic for waistband and channel/tab assemblies** Annex C, para 3.4.10
- **Elastic cord** Annex B, Para 3.4.11
- **Drawcord locks** Annex B, para 3.4.12
- **Snap fasteners** Annex B, para 3.4.13 and Annex C, para 3.4.9
- **Thread** Annex B, para 3.4.14 and Annex C, para 3.4.11

3. PRODUCTION TECHNICAL REQUIREMENTS

a. **Physical Samples** - A production sample shall not be required from the Contractor unless specifically requested by the DND Technical Authority.

b. Laboratory Analysis -In addition, laboratory analysis in accordance with those requirements detailed in **Annex J** shall be submitted.

NOTES:

Testing: Unless otherwise specified, testing shall be performed by an independent accredited laboratory establishment familiar with textile testing in accordance with the test methods detailed in the applicable document(s). Failure to supply test results that that follow these requirements may render the bid non-compliant.

Certificate(s) of Compliance / Certificate(s) of Conformity: Wherever “C of C” appears, the contractor is required to obtain a Certificate of Compliance or Certificate of Conformity from their supplier with the purchase. Certificate(s) of Compliance and Certificate(s) of Conformity shall be current, be dated and signed, and shall clearly indicate compliance of the specific lot delivered. Failure to supply Certificate(s) of Compliance and/or Certificate(s) of Conformity that follow these requirements may render the bid non-compliant.

EXIGENCES TECHNIQUES PRÉALABLES À L'ADJUDICATION DU CONTRAT, EXIGENCES TECHNIQUES RELATIVES À LA PRÉSÉRIE ET À LA PRODUCTION DES BLOUSONS ET PANTALONS CONVERGENTE POUR TEMPS CHAUD OU PLUVIEUX, COUPE-VENT, ANTISTATIQUE, DCAMC™

1. EXIGENCES TECHNIQUES RELATIVES À L'ADJUDICATION DU CONTRAT

a. **Échantillons** – Dans le cadre de l'évaluation technique pour confirmer qu'un soumissionnaire a la capacité de respecter les exigences techniques, ce dernier doit fournir des échantillons des vêtements avec la soumission. Un échantillon préalable à l'adjudication du contrat est requis de tous les soumissionnaires à l'exception de ceux à qui on a attribué un contrat du ministère de la Défense nationale pour ces vêtements dans les deux dernières années. **Les tailles soumises à l'étape de l'adjudication doivent être le 7040 pour le blouson et le 7034 pour les pantalons.**

Le soumissionnaire doit s'assurer que les échantillons requis sont fabriqués conformément à l'exigence technique de la présente réquisition et qu'ils sont entièrement représentatifs de la soumission déposée. Les échantillons seront évalués selon la qualité d'exécution, la conformité aux tissus prescrits et aux mensurations, et le soumissionnaire doit démontrer sa capacité à respecter les technologies requises.

Dans les cas où un soumissionnaire n'a pas accès à un composant (fermeture autoaggripante à boucles et à crochets, sangle, etc. **à l'exception des textiles mentionnés à l'annexe J qui nécessitent du métrage ou des échantillons et des essais à l'étape préalable à l'adjudication du contrat**) dans le délai alloué pour la fabrication des échantillons, le soumissionnaire peut utiliser un composant substitut similaire, à la condition de joindre une lettre à l'échantillon expliquant la substitution, de même qu'une déclaration par laquelle le fournisseur s'engage, dans l'éventualité où il serait retenu, à se conformer strictement aux exigences techniques visant les matériaux.

b. Analyses en laboratoire – De plus, des analyses en laboratoire du produit offert montrant les résultats des essais précisés à l'**annexe J** doivent être fournies avec les échantillons. Les essais doivent être menés par un laboratoire agréé spécialisé dans les essais de textiles conformément aux méthodes d'essai détaillées dans le document.

2. EXIGENCES TECHNIQUES RELATIVES À LA PRÉSÉRIE

a. **Échantillons** – Un échantillon de présérie est demandé à tous les entrepreneurs à moins que l'autorité technique du MDN ne l'ait annulé. Les échantillons de présérie doivent être complètement représentatif de la production finale, étant fabriqués à partir de pièces et de matériaux tels que spécifiés et par l'équipement et des procédés qui seront utilisés dans la production de la quantité. L'échantillon de pré-production doit être entièrement conforme à l'exigence technique de cette réquisition. **Un (1) blouson pour temps chaud ou pluvieux, coupe-vent, antistatique, DCAMC^{MC}, taille 7040 et un (1) pantalon pour temps chaud ou pluvieux, coupe-vent, antistatique, DCAMC^{MC}, taille 7034 sont requis à l'étape de présérie.**

b. Analyses en laboratoire – De plus, des analyses en laboratoire conformément aux exigences détaillées à l'**annexe J** doivent être soumises. En plus des matériaux décrits à **l'annexe J**, les certificat de conformité suivants doivent être soumis à l'étape de la présérie :

- **Doublure de la partie inférieur de la manche, de la partie supérieure du corps et des sacs des poches poitrine dissimulées** annexe B, article 3.4.4

- **Ruban autoagrippant à boucles et à chrochets** annexe B, article 3.4.6 et annexe C, article 3.4.4
- **Fermetures à glissière** annexe B, article 3.4.7 et annexe C, article 3.4.5
- **Cordon** annexe C, article 3.4.8
- **Ruban réfléchissant** annexe B, article 3.4.8 et annexe C, article 3.4.6
- **Sangle** annexe B, article 3.4.9
- **Ruban sergé à chevrons** annexe B, article 3.4.10 et annexe C, article 3.4.7
- **Élastique pour la ceinture montée et pour les assemblages de coulisse et de patte** annexe C, article 3.4.10
- **Cordon élastique** annexe B, article 3.4.11
- **Autobloqueurs de cordon** annexe B, article 3.4.12
- **Boutons-pression** annexe B, article 3.4.13 et annexe C, article 3.4.9
- **Fil** annexe B, article 3.4.14 et annexe C, article 3.4.11

3. EXIGENCES TECHNIQUES RELATIVES À LA PRODUCTION

a. **Échantillons** – Un échantillon de production n'est pas requis de la part de l'entrepreneur à moins que l'autorité technique du MDN ne l'exige spécialement.

b. **Analyse en laboratoire** – De plus, des analyses en laboratoire conformes aux exigences détaillées à l'**annexe J** doivent être soumises.

NOTES :

Essais : Sauf indication contraire, les essais doivent être menés par un laboratoire agréé spécialisé dans les essais de textiles conformément aux méthodes d'essai détaillées dans les documents applicables. Le défaut de fournir les résultats des essais effectués conformément aux présentes exigences pourrait rendre la présente soumission non conforme.

Certificats de conformité : Lorsque l'inscription « C de C » est présente, l'entrepreneur doit obtenir un certificat de conformité de son fournisseur avec l'achat. Le certificat de conformité doit être valide, daté et signé et doit clairement indiquer la conformité du lot livré. Le défaut de fournir les certificats de conformité pourrait rendre la soumission non conforme.