Drawings

PART 1 General

1.1 WORK COVERED BY CONTRACT DOCUMENTS

.1 Work of this Contract comprises the installation and testing of backup power and life safety systems at the Workshops Building of Victoria Coast Guard Base located at 25 Huron Street, Victoria BC V8V 4V9.

1.2 PERMITS

.1 Make application and pay all fees in respect to all permits required to complete work including the Building Permit.

.2 Arrange for inspection of all work by the authorities having jurisdiction. On completion of work, furnish final unconditional certificates of approval by the inspecting authorities.

1.3 WORK SEQUENCE

.1 Construct Work in stages to accommodate Owner's use of premises during construction.

.2 Co-ordinate Progress Schedule and co-ordinate with Owner Occupancy during construction.

.3 Maintain fire access/control.

1.4 CONTRACTOR USE OF PREMISES

.1 Limit use of site and premises for Work, for storage, and for access, to allow:

- .1 Owner occupancy.
- .2 Public usage.

.2 Co-ordinate use of premises under direction of Owner.

.3 Obtain and pay for use of additional storage or work areas needed for operations under this Contract.

.4 Remove or alter existing work to prevent injury or damage to portions of existing work which remain.

.5 Repair or replace portions of existing work which have been altered during construction operations to match existing or adjoining work, as directed by Owner and Consultant. This includes drywall finishes, flooring and ceilings. Sand and prime coat finishes for final painting by others.

.6 At completion of operations condition of existing work: equal to or better than that which existed before new work started.

1.5 OWNER OCCUPANCY

.1 Owner will occupy premises during entire construction period for execution of normal operations.

.2 Co-operate with Owner in scheduling operations to minimize conflict and to facilitate Owner and public usage.

1.6 ALTERATIONS, ADDITIONS OR REPAIRS TO EXISTING BUILDING

.1 Execute work with least possible interference or disturbance to facility operations, building operations, occupants, public and normal use of premises. Arrange with Owner to facilitate execution of work. After hours work may be required.

1.7 EXISTING SERVICES

.1 Notify Owner, Consultant and utility companies of intended interruption of services and obtain required permission.

.2 Where Work involves breaking into or connecting to existing services, give Owner 7 calendar days notice for necessary interruption of mechanical or electrical service throughout course of work. Minimize duration of interruptions. Carry out work at times as directed by governing authorities with minimum disturbance to pedestrian, vehicular traffic and tenant operations.

.3 Establish location and extent of service lines in area of work before starting Work. Notify Owner and Consultant of findings.

.4 Submit schedule to and obtain approval from Owner for any shut-down or closure of active service or facility. Adhere to approved schedule and provide notice to affected parties.

.5 Provide temporary services when directed by Owner to maintain critical building and tenant systems.

.6 Where unknown services are encountered, immediately advise Owner and Consultant and confirm findings in writing.

.7 Protect, relocate or maintain existing active services as required to facilitate work. When inactive services are encountered, cap off in manner approved by authorities having jurisdiction.

.8 Record locations of maintained, re-routed and abandoned service lines.

.9 Construct barriers in accordance with Section 01 56 00 - Temporary Barriers and Enclosures.

1.8 DOCUMENTS REQUIRED

.1 Maintain at job site, one copy each document as follows:

- .1 Contract Drawings.
- .2 Specifications.

.3 Addenda.
.4 Reviewed Shop Drawings.
.5 List of Outstanding Shop Drawings.
.6 Change Orders.
.7 Other Modifications to Contract.
.8 Field Test Reports.
.9 Copy of Approved Work Schedule.
.10 Health and Safety Plan and Other Safety Related Documents.
.11 Other documents as specified.

PART 2

PART 3 Products

3.1 NOT USED

.1 Not used.

PART 4 Execution

4.1 NOT USED

.1 Not used.

END OF SECTION

1.1 DESCRIPTION OF WORK

.1 Work under this Contract consists primarily of replacement and relocation of electrical distribution equipment, installation of back-up generator and automatic transfer switch and life safety systems in the Victoria Coast Guard Base Workshops Building.

.2 Provide materials, equipment and plant, of specified design, performance and quality; and, current models with published certified ratings for which replacement parts are readily available. Provide project management and on-site supervision to undertake administration, meet schedules, ensure timely performance, ensure co-ordination, and establish orderly completion and the delivery of a fully commissioned installation.

.3 The drawings are diagrammatic and are a guide to establishing quality of equipment, materials, workmanship and performance. All work shall be in accordance with the Project drawings and Specifications and their intent, complete with all necessary components, including those not normally shown or specified, but required for a complete installation.

.4 The term “Provide” shall mean “Supply and Install” for all products and services specified. “As Indicated” means that the item(s) specified are shown on the drawings.

1.2 DOCUMENTS REQUIRED

.1 Maintain at job site, one copy each of the following:

- .1 Contract drawings
- .2 Specifications
- .3 Addenda
- .4 Reviewed shop drawings
- .5 Change orders
- .6 Other modifications to Contract
- .7 Field test reports
- .8 Copy of approved work schedule
- .9 Manufacturers' installation and application instructions
- .10 Referenced Codes and Standards listed in the Specification

.2 Where the Contract Documents do not contain sufficient information for the proper selection of equipment for bidding, notify the Consultant during the Tendering period. If clarification is not obtainable, allow for the most expensive arrangement. Failure to do this shall not relieve the Contractor of responsibility to provide the intended equipment.

1.3 PROJECT CO-ORDINATION

.1 Co-ordinate progress of the Work, progress schedules, submittals, use of site, temporary utilities and construction facilities.

.2 All Contractors are advised to perform an on-site examination prior to commencing Work and notify the Consultant and General Contractor in writing of any deviation from the Contract Documents. Commencement of Work shall indicate acceptance of existing field conditions.

.3 The responsibility as to which sub-trade supplies and installs any and all materials rests solely with the Prime Contractor.

.4 Extras to the contract will not be considered based on grounds of difference in interpretation of plans and specifications as to which trade involved shall be responsible for certain materials, installation or specialties.

.5 The Contractor shall do all cutting and remedial Work that may be required to make the several parts of the Work come together properly. Co-ordinate the schedule to ensure that as much as possible is built into the Work and that this requirement is kept to a minimum.

1.4 CONSTRUCTION SCHEDULE

.1 Immediately following Award of Contract, the Contractor will meet with the Consultant and the Owner to establish parameters of scheduling preparatory to preparing a firm Construction Progress Schedule.

.2 The Contractor shall:

.1 prepare and submit to the Consultant within ten (10) Working Days of the contract award by the Owner, a horizontal bar chart construction schedule indicating the timing (start and completion date of activities noting the first work day of each week) of all major activities of the Work, providing a separate bar for each trade or operation including Mechanical and Electrical work, and provides details of the critical events and their inter-relationship to demonstrate the Work will be performed in conformance with the Contract Time; and

.2 submit one opaque reproduction (plus four copies) to the Consultant, who will review the schedule for conformity to the conditions of the Contract or as stipulated by the Contract Documents, and will return one reviewed copy to the Contractor within ten (10) Working Days after receipt; and

.3 monitor the progress of the Work relative to the construction schedule and update the schedule on a monthly basis for Consultant review at time of submission for application for payment and as stipulated by the Contract documents; and

.4 promptly advise the Consultant of any revisions required to the schedule as a result of extensions of the Contract ;and

.5 indicate changes occurring since previous submission of schedule such as major changes in scope, activities modified since previous submission, revised projections of progress and completion, other identifiable changes; and

.6 provide a narrative report to define problem areas, anticipated delays, the impact on the schedule, corrective action recommended and its

effect, the effect of changes on schedules of Other Contractors, where present; and

.7 distribute copies of the Consultant approved revised schedule to the Owner, Consultant, Job Site office, Subcontractors, other concerned parties etc.; and

.8 instruct recipients of the revised schedule to report to the Contractor within five (5) Working Days, any problems anticipated by the time frames noted in the schedule.

.3 The Schedule shall clearly show a complete and detailed sequence of operations for all trades and an orderly performance and completion of the various parts of the Work to attain the Completion Date.

.4 Incorporate within the Construction Schedule, a complete and realistic schedule, integrated with, and recognizing the reliance on, other divisions of the work. Take into account the lead time for the review of operating and maintenance manuals, commissioning, verification of system operation by the Consultant and the demonstration and instruction to the Owner.

.5 The Schedule shall indicate submission and approval dates for shop drawings and dates for preparing and submitting project close out documentation.

.6 Periods of shift working and premium time work shall be clearly indicated on the Schedule.

.7 The approved Construction Schedule shall be monitored on a monthly basis to indicate construction progress. Should the Contractor fall behind the Schedule indicated by the Construction Schedule such as to jeopardize any of the Completion Dates: the Contractor shall rework the Construction Schedule to show a reorganization of the remaining Work to bring the Work back on schedule and to achieve the specified Completion Dates.

.8 If the Schedule is revised as per the previous clause, resubmit the revised Schedule for approval and reissue.

.9 Commence Work immediately upon official notification of acceptance of offer and complete the Work by April 30, 2016.

1.5 COST BREAKDOWN

.1 Submit detailed price breakdowns (labour and materials) for each section of work within seven days after the award of contract. Breakdown of Contract Price in various trades shall be agreeable to the Consultant. After approval, cost breakdown will be used as a basis for progress draws.

.2 In particular cases more detail may be necessary to properly assess a change order or progress claim. This additional information shall be supplied when requested by the Consultant. Mark-up information is required for change orders.

.3 The cost breakdown of each trade shall exclude the GST/HST. The GST/HST for the total shall be shown as a separate item on the breakdown.

1.6 CERTIFICATES & TRANSCRIPTS

.1 Submittals prior to start of construction:

.1 Certified copy of Insurance.

.2 List of subtrades and subtrade prices.

.3 Letter of compliance with Workers' Compensation Act.

.2 Submittals prior to initial progress claims:

.1 Detailed cost breakdowns.

.3 Submittals during construction:

.1 Contractor's Statutory Declaration on forms approved by C.C.A. is to accompany all progress claims subsequent to initial claim. Declaration is to certify that all past claims have been paid as certified or as noted and must be properly signed and notarized.

.4 Submittals prior to Substantial Performance:

.1 Occupancy Permit and Inspection Certificates from authorities having jurisdiction and as required for equipment items to comply with governing Codes and Regulations.

.2 All other submittal requirements listed herein.

.5 Submittals at Total Performance:

.1 Refer to Clause “Project Close-out”.

1.7 BUILDING OPERATION DURING CONSTRUCTION

.1 In order to minimize operational difficulties for the building staff, the various trades must cooperate with the Owner throughout the entire construction period and particularly ensure that noise is minimized.

.2 Convenient access for the Staff to the building must be maintained at all times. Minor inconvenience and interruption of services will be tolerated, provided advance notice is given, but the Contractor will be expected to co-ordinate his work, in consultation with the Owner so that the operation of the facility can be maintained as nearly normal as possible.

.3 The Contractor shall require his employees to comply with the rules and regulations in force governing the conduct of the Owner’s Employees and shall conduct the work in such a manner as not to hinder, impede, nor injure the Owner’s operations, or conduct any work being carried out by the Owner.

.4 The Contractor in performing the Work shall ensure that in no way is there any undue interference with the conduct of the Owner's Business. Prior to commencement of the Work the Contractor shall liaise with the Owner to ensure planned work procedures meet with the Owner's requirements.

1.8 ACCESS TO THE WORK

.1 The Owner and/or his representative shall have access to the Work, or other places work is being fabricated in connection with the Contract, at all times for the purposes of inspection and examination of workmanship and materials.

.2 The Owner will designate a representative for the Project. All contact with the Owner shall be forwarded through the Owner's Representative. Maintain contact as required to co-ordinate all Owner/Contractor requirements. The Owner's Representative shall have access to the work at all times.

1.9 CONTRACTOR'S USE OF SITE

.1 Do not unreasonably encumber site with materials and equipment.

.2 Move stored products, trailers or equipment which interfere with operations of the Owner.

1.10 CODES AND STANDARDS

.1 Perform work in accordance with the Building Code of British Columbia, Workers' Compensation Board of B.C., and any other code of provincial or local application provided that in any case of conflict or discrepancy, the more stringent requirements shall apply.

.2 Meet or exceed requirements of specified standard, codes and referenced documents.

1.11 PERMITS

.1 Make application and pay all fees in respect to all permits required to complete Work, including the Building Permit.

.2 The Owner will pay all Development Cost Charges. These are not to be included in the Tender Price.

.3 Arrange for inspection of all work by the authorities having jurisdiction. On completion of work, furnish final unconditional certificates of approval by the inspecting authorities.

1.12 DRAWINGS AND MEASUREMENTS

.1 Drawings are generally diagrammatic and are intended to indicate the scope and general arrangement of work and are not detailed installation drawings. Do not scale the drawings. Obtain accurate dimensions from the Architectural and Structural drawings.

.2 Consult the architectural drawings and details for exact locations of fixtures and equipment. Obtain this information from the Consultant where definite locations are not indicated.

.3 Take field measurements, where equipment and material dimensions are dependent upon building dimensions.

.4 Where imperial units have been indicated in [brackets] following the requirements in SI units, the conversion is approximate and provided for convenience. The SI units shall govern.

1.13 PROJECT MEETINGS

.1 Notify all parties concerned of meetings and ensure attendance by appropriate personnel.

.2 The Contractor will arrange project meetings and assume responsibility for setting times and recording and distributing minutes.

.3 Meetings will take place regularly and at a frequency mutually agreed between the Consultant and the Contractor.

1.14 SETTING OUT OF WORK

.1 Assume full responsibility for and execute complete layout of Work to locations, lines and elevations indicated.

.2 Ensure that equipment does not transmit noise and/or vibration to other parts of the building, as a result of poor installation practice.

.3 Provide devices needed to lay out and construct Work.

1.15 CONSTRUCTION AREA

.1 Provide barricades and dust-proof screens for the inside and outside work as required to progress the Work. Access shall be restricted to the Public. Safety is the primary concern.

.2 Fencing shall be 1525mm high and of durable construction. Provide access gates as required.

.3 Existing fences/materials may be used for construction fencing, at the Contractor’s discretion.

1.16 LOCATION OF EQUIPMENT AND FIXTURES

.1 Location of equipment, fixtures and outlets indicated or specified are to be considered as approximate.

.2 Locate equipment, fixtures and distribution systems to provide minimum interference and maximum usable space and in accordance with manufacturer's recommendations for safety, access and maintenance.

.3 If any doubt exists, inform Consultant of impending installation and obtain his approval for actual location.

1.17 SAFETY MEASURES

.1 Construction Safety:

.1 Observe and enforce construction safety measures required by the B.C. Building Code, Workers' Compensation Board of B.C. and municipal statutes and authorities.

.2 In event of conflict between any provisions of above authorities the most stringent provision will apply.

.3 Ensure no part of Work is subjected to a load which will endanger its safety or will cause permanent deformation.

.4 Design and construct falsework in accordance with CSA S269.1

.5 Design and construct scaffolding in accordance with CSA S269.2

.6 Maintain safety helmets and eye protection on the jobsite, ready for use.

.2 Fire Safety:

.1 Comply with requirements of "Fire Safety Requirements During Building Construction Operations" - Fire Protection Engineering Standards No. 301.

.3 For purposes of the Workers Compensation Act and Occupational Health & Safety Regulations, the successful Tenderer will be designated as the "Prime Contractor" for all work associated with this construction project.

1.18 HOUSEKEEPING & SITE CLEANLINESS

.1 Housekeeping is to be of the highest standards and all trades are required to police themselves. Should housekeeping be observed to deteriorate and in the opinion of the Consultant, adversely affect the quality of progress of the Project, he shall be free to order steps taken to rectify matters.

1.19 CONCEALMENT

.1 Conceal pipes, ducts and wiring in floor, wall and ceiling construction of finished areas except where indicated otherwise.

1.20 ASBESTOS

.1 All new material / products installed shall be free of asbestos.

.2 If any Contractor, during renovations / demolition, should discover asbestos (or material suspected to be asbestos) on piping, ductwork, etc., he shall immediately cease all work in that area and advise the Prime Contractor. The Prime Contractor shall take immediate appropriate action to verify presence of friable asbestos, contain any fibres that have been disturbed, and advise the Consultant and the Owner’s representative.

.3 The Contractor is responsible for coordinating and scheduling any hazardous waste removal work.

.4 The Contractor will not be entitled to a claim for any delays resulting from the investigation of or removal of asbestos.

1.21 EXISTING SERVICES AND SURFACE FEATURES

.1 Protect all existing services encountered. Every effort has been made to show the known existing services and features. Notwithstanding any other provisions of this Contract, the Contractor shall be solely responsible for satisfying himself to the existence, extent and location of surface features either shown or not on the drawings, and the effect they will have on the work. Surface features shall include but not necessarily limited to trees, shrubbery, ornamental features and fences. Unless specifically noted otherwise in the Contract Documents, no additional compensation will be made for restoration of surface features or for the effect they may have upon the Work.

.2 The removal of concealing surfaces may reveal other existing services. Work with the Owner's staff to trace the originating source and points served. Obtain instructions from the Consultant when existing services require relocation or modifications, other than those already indicated in the Contract Documents.

.3 Arrange work to avoid shutdowns of existing services. Where shutdowns are unavoidable, obtain the Owner's approval of the timing, and work to minimize any interruptions.

.4 Shutdowns, to permit connections, will be carried out by maintenance staff.

.5 In order to maintain existing services in operation, temporary relocations and/or bypasses of piping and ductwork may be required.

.6 Be responsible for any damages to existing systems by this work.

.7 The interruption of utility services to permit tie-ins shall be arranged through the owners representative. Application must be received in writing at least seven (7) calendar days prior to the date required for the shutdown. Service shutdowns shall only be carried out by maintenance staff and will normally be scheduled to occur during evenings or weekends. The Owner reserves the right to withhold permission for a reasonable period with respect to any shutdown, if the shutting-off of a service will interfere with important operations.

1.22 CUTTING, CORING, FITTING AND PATCHING

.1 All cutting, patching and painting shall be included in the Tender. All surfaces shall be returned to “as good or better” than original.

.2 The intent is to have a clean installation at project completion.

.3 Execute cutting, coring, fitting and patching required to make Work fit properly together. Verify the location of existing service runs and structural components within existing concrete floor and walls prior to core drilling and/or cutting. Provide X-ray investigation as necessary. A repair to existing services and structural components damaged as a result of core drilling and cutting is included in the work.

.4 Making good is defined as matching the adjacent surfaces such that there be no visible difference between existing and new surfaces when viewed from 1.5 m in the ambient light, and includes painting the whole surface to the next change of plane.

.5 Obtain Consultant's approval before cutting, boring or sleeving load-bearing members.

.6 Make cuts with clean, true, smooth edges. Make patches inconspicuous in final assembly.

.7 Fit work airtight to pipes, sleeves, ducts and conduits.

.8 At penetrations of fire rated assemblies, with any services or ducts completely seal voids with fire resistive material specified in other Sections for the full thickness of the construction element and to comply with Code requirements.

.9 Patching shall include for the provision of base materials to match adjacent floor/wall base at all pipe/duct furring locations at floor level.

.10 Patching shall include for cutting, fitting and re-installation of lay-in acoustic tile grid and ceilings where penetrated by pipe furrings.

1.23 ADDITIONAL DRAWINGS

.1 Consultant may furnish additional drawings to assist proper execution of Work. These drawings will be issued for clarifications only. Such drawings shall have same meaning and intent as if they were included with Plans referred to in Contract Documents.

1.24 RECORD DRAWINGS

.1 As Work progresses, maintain accurate records to show all deviations from the Contract Drawings. In all instances the Contractor is wholly responsible for the accuracy of the record drawings produced. As-built information shall be recorded by the Contractor as Changes occur, and at completion supply one set of all drawings to the Consultant with all deviations clearly marked.

.2 One set of prints will be provided for this purpose. Keep prints in clean condition and identify as "Project Record Set."

.3 Conversion of this information onto the CAD drawings will be the responsibility of the Contractor. Refer to Specification Sections for individual disciplines.

1.25 WORKMANSHIP

.1 Workmanship shall be of the best quality, executed by workers experienced and skilled in the respective duties for which they are employed. Immediately notify the Consultant if required Work is such as to make it impractical to produce these results.

.2 Do not employ any unfit person or anyone unskilled in their required duties.

.3 Decisions as to the quality or fitness of workmanship in cases of dispute, rest solely with the Consultant whose decision is final.

1.26 MATERIAL AND EQUIPMENT

.1 Material and Equipment:

.1 Use new material and equipment unless otherwise specified.

.2 Preference shall be given to British Columbia products for all materials and supplies used in the construction of the building, plant or site, where the quality, services and prices are equal. The decision of equality shall be made by the Consultant.

.3 Provide material and equipment of specified design and quality, performing to published ratings and for which replacement parts are readily available.

.4 Use products of one manufacturer for equipment or material of same type or classification unless otherwise specified.

.2 Concrete, Poured-in-Place:

.1 Refer to Structural Specifications.

.3 Manufacturer's Instructions:

.1 Unless otherwise specified, comply with manufacturer's latest printed instructions for materials and installation methods.

.2 Notify Consultant in writing of any conflict between these specifications and manufacturer's instruction. Consultant will designate which document is to be followed.

.4 Fastenings, General:

.1 Provide metal fastenings and accessories in same texture, colour and finish as base metal in which they occur. Prevent electrolytic action between dissimilar metals. Use non-corrosive fasteners, anchors and spacers for securing exterior work.

.2 Space anchors within limits of load bearing or shear capacity and ensure that they provide positive permanent anchorage. Wood plugs not acceptable.

.3 Keep exposed fastenings to minimum, space evenly and lay out neatly.

.4 Fastenings which cause spalling or cracking of material to which anchorage is made are not acceptable.

.5 Obtain Consultant's approval before using explosive actuated fastening devices. If approval is obtained comply with CSA Z166.

.6 Fastenings, Equipment:

.1 Use fastenings of standard commercial sizes and patterns with material and finish suitable for service.

.2 Use heavy hexagon heads, semi-finished unless otherwise specified. Use No. 304 stainless steel for exterior areas.

.3 Bolts may not project more than one diameter beyond nuts.

.4 Use plain type washers on equipment, sheet metal and soft gasket lock type washers where vibrations occur and resilient washers with stainless steel.

.7 Delivery and Storage:

.1 Deliver, store and maintain packaged material and equipment with manufacturer's seals and labels intact.

.2 Prevent damage, adulteration and soiling of material and equipment during delivery, handling and storage. Immediately remove rejected material and equipment from site.

.3 Store material and equipment in accordance with supplier's instructions.

.4 Touch-up damaged factory finished surfaces to Consultant's satisfaction. Use primer or enamel to match original. Do not paint over name plates.

.8 Construction Equipment and Plant:

.1 Maintain construction equipment and plant in good operating order.

1.27 SHOP DRAWINGS, PRODUCT DATA AND SAMPLES

.1 Submit to Consultant, for review, shop drawings and product data, and samples specified.

.2 Shop Drawings:

.1 Drawings to be prepared by Contractor, sub-contractor, supplier or distributor, which illustrate appropriate portion of Work; showing fabrication, layout, setting or erection details as specified in appropriate sections.

.2 Drawings to be prepared in SI metric units.

.3 Electronic submissions are encouraged over paper. If paper, provide eight copies of all shop drawings. Each sheet must have 75 mm x 125 mm clear space for review stamp.

.3 Product Data:

.1 Certain specification sections specify that manufacturer's standard schematic drawings, catalogue sheets, diagrams, schedules, performance charts, illustrations and other standard descriptive data will be accepted in lieu of shop drawings, provided that the product concerned in clearly identified. Submit in sets, not as individual submissions.

.4 Samples:

.1 Submit samples in sizes and quantities specified.

.2 Where colour is criterion, submit full range of colours.

.3 Submit all samples as soon as possible after the Contract is awarded, to facilitate production of complete colour scheme by the Consultant.

.5 Submission Requirements:

.1 Schedule submissions at least 20 days before dates reviewed submissions will be needed.

.2 Electronic submissions are encouraged.

.6 Coordination of Submissions:

.1 Review shop drawings, product data and samples prior to submission.

.2 Coordinate with field construction criteria.

.3 Verify catalogue numbers and similar data.

.4 Coordinate each submittal with requirements of the Work of all trades and Contract Documents.

.5 Responsibility for errors and omissions in submittals is not relieved by Consultant's review of submittals.

.6 Responsibility for deviations in submittals from requirements of Contract Documents is not relieved by Consultant's review of submittals.

.7 Notify Consultant, in writing at time of submission, of deviations in submittals from requirements of Contract Documents.

.8 After Consultant's review, distribute copies.

.7 Work affected by submittal shall not proceed until review is completed.

1.28 TESTING AND INSPECTION SERVICES

.1 Particular requirements for inspection and testing to be carried out by testing service or laboratory designated by Consultant are specified under various sections.

.2 The Owner will appoint, on the recommendation of the Consultant, services of a testing laboratory except for the following:

.1 Inspection and testing required by laws, ordinances, rules, regulations or orders of public authorities.

.2 Inspection and testing performed exclusively for Contractor's conveniences.

.3 Testing, adjustment and balancing of conveying systems, mechanical and electrical equipment and systems.

.4 Mill tests and certificates of compliance.

.5 Tests specified to be carried out by Contractor under the supervision of the Consultant.

.6 Tests required to obtain specified roofing guarantee.

.3 Where tests or inspections performed by the testing service reveal Work is not in accordance with the Contract requirements, Contractor shall pay costs for additional tests or inspections as Consultant may require to verify acceptability of corrected Work.

.4 Pay costs for uncovering and making good Work that is covered before required inspection or testing is completed and approved by Consultant.

.5 Provide Consultant with three copies of testing laboratory reports as soon as they are available. Additional copies of all test results for concrete and compaction shall be sent directly to the Structural Consultant Engineer.

.6 Furnish labour and facilities to:

.1 Provide access to Work to be inspected and tested.

.2 Facilitate inspections and tests.

.3 Make good Work disturbed by inspection and test.

.7 Notify Consultant sufficiently in advance, one working day minimum, of operations to allow for assignment of laboratory personnel and scheduling of test.

.8 Where materials are specified to be tested, deliver representative samples in required quantity to testing laboratory.

.9 The cost of providing testing services other than exceptions described in clause .2 above shall be paid for from Cash Allowance for Testing.

1.29 SLEEVES, HANGERS AND INSERTS

.1 Provide and set sleeves where conduits pass through masonry or concrete. Pack sleeves with material approved for use in fire separations. Obtain Consultant's approval before cutting for sleeves. Provide and install hangers and inserts where required.

1.30 MAINTENANCE MANUAL

.1 On completion of Project submit to Consultant, four (4) hard copies of the Operations and Maintenance Manual, made up as follows:

.1 Bind data in 215 mm x 280 mm vinyl hard covered 3 ring loose leaf binder.

.2 Enclose title sheet, labeled "Operation and Maintenance Data", project name, data and list of contents, names of Contractor, sub-contractors, consultants and sub-consultants.

.3 Bind in copies of all guarantees.

.4 Enclose one reproducible copy of all reviewed shop drawings updated to include any site revisions.

.5 Organize contents into applicable sections of Work to parallel project specification breakdown. Mark each section by labeled tabs protected with celluloid covers fastened to hard paper dividing sheets.

.6 Refer to Mechanical and Electrical Divisions for specific details of Mechanical and Electrical data.

.7 Digital manuals shall be supplied on (3) three CD-ROMs in digital format. The information shall be organized into sections in a user-friendly format that is easy to search for specific information. An indexing system shall be included that remains on an expandable portion of the screen and allows the end user to scroll through the manual information that appears on the main portion of the screen. The

digital version content and organization for each manual shall be arranged in a manner identical to the hard copy version.

.2 Submit manuals to Consultant 2 weeks prior to anticipated date of Substantial Performance of the Work.

1.31 ENVIRONMENTAL PROTECTION

.1 Fires and burning of rubbish on site not permitted.

.2 Do not bury rubbish and waste materials on site.

.3 Do not dispose of waste or volatile materials such as oil, paint thinner or mineral spirits into waterways, storm or sanitary sewers or on site.

.4 Provide temporary drainage and pumping as necessary to keep excavations and site free from water.

.5 Control disposal of run-off of water containing suspended materials or other harmful substances in accordance with local authority requirements.

.6 Protect trees and plants on site as designated by Consultant.

.7 Cover or wet down dry materials and rubbish to prevent blowing dust and debris.

1.32 CLEANING

.1 Conduct cleaning and disposal operations to comply with local ordinances and anti-pollution laws.

.2 Vacuum clean interior building areas when ready to receive finish painting and continue vacuum cleaning on an as-needed basis until building is sufficiently completed or ready for occupancy.

.3 In preparation for interim and final inspections, examine all sight exposed interior and exterior surfaces and concealed spaces.. Remove grease, dust, dirt, stains, labels, fingerprints, and other foreign materials, from sight exposed interior and exterior finished surfaces including glass and other polished surfaces. Broom clean paved surfaces; rake clean other surfaces of grounds. Remove snow and ice from access to building.

.4 Use cleaning materials and methods in accordance with instructions of manufacturer of surface to be cleaned.

1.33 PAINTING

.1 Clean exposed bare metal surfaces, including those supplied under Divisions 15 and 16, removing all dirt, dust, grease and millscale. Apply at least one coat of corrosion resistant primer paint to all supports and equipment fabricated from ferrous metal.

.2 Paint all non-plated hangers and exposed sleeves with a rust inhibiting primer, as they are installed.

.3 Repaint all marred factory finished equipment, including those supplied under Division 26, to match the original factory finish.

.4 Paint all equipment, piping and materials, including those supplied under Division 26, installed exposed inside finished areas of the building or exposed outside the building with colours as selected by the Owner.

1.34 Taxes

.1 Pay all taxes levied by law, including Federal, Provincial, Municipal and GST/HST.

.2 GST/HST is to be shown as a separate item on all Progress Claims.

1.35 Temporary Facilities

.1 Access:

.1 Provide and maintain complete access to project site.

.2 Contractor's Site Office:

.1 Provide office of size to accommodate site meetings and Contractor's operations.

.2 Locate in consultation with Owner.

.3 Provide telephone and fax services for the duration of the project. The Owner will not provide telephone and fax lines for use by the Contractor.

.3 Storage Sheds:

.1 It should be understood that storage space on site may be unobtainable. There shall be no obligation on the part of the Owner to provide storage space. All materials on site shall be held in secure, dry storage.

.2 Provide adequate weathertight sheds with raised floors, for storage of materials, tools, and equipment which are subject to damage by weather.

.4 Sanitary Facilities:

.1 Provide sanitary facilities for work force in accordance with governing regulations and ordinances. Maintain in clean and sanitary condition.

.5 Enclosure of Structure:

.1 Provide temporary weathertight enclosures and protection for exterior openings until permanently enclosed. Design enclosures to withstand wind pressure. Provide lockable entry as required for moving personnel during construction period.

.2 Provide temporary enclosures to secure building from entry of unauthorized personnel during construction period.

.6 Power:

.1 Arrange, pay for and maintain temporary electrical power supply sufficient for construction purposes. Pay for all electricity used.

.7 Water Supply:

.1 Arrange, pay for and maintain temporary water supply. Pay all charges.

.8 Heating and Ventilating:

.1 Pay for costs of temporary heat and ventilation required for construction purposes including costs of installation, fuel, operation, maintenance and removal of equipment. Use of direct fired heaters discharging waste products into work areas will not be permitted.

.2 Maintain minimum 5°C temperature unless specified otherwise.

.9 Communication Equipment:

.1 Provide telephone for Contractor's use. Pay all charges.

.2 Provide a facsimile machine for Contractor's use. Pay all charges.

.10 Removal of Temporary Facilities:

.1 Remove temporary facilities from site at the completion of the Work or when directed by Consultant.

1.36 SALVAGE

.1 All piping, ducting and equipment, which becomes redundant and is no longer required due to the work in this Contract shall be completely removed.

.2 All existing items which need to be removed, and which have a reasonable salvage value, such as fans and motors, air terminals, plumbing fixtures, and valves, shall be carefully removed and handed over to the Owner. Handing over to the Owner includes moving to Owner's designated storage place on site. These items shall not become the property of the Contractor. The Owner has first right to the salvaged equipment. Obtain a written receipt from the Owner detailing each of the items handed over.

.3 All items not required by the Owner shall be removed from the site.

1.37 RESTORATION

.1 All building surfaces shall be restored to original condition or better, including painting where applicable.

.2 All hard and soft landscaping, including concrete, asphalt, gravel, sod, shrubs, etc., shall be restored to original condition or better.

1.38 REPAIR OF PAVED SURFACES

.1 Existing pavement which must be removed for the work shall be cut by an approved method. Ripping of asphalt will not be permitted.

.2 Paved surfaces which have been cut to allow for excavation or otherwise damaged by the actions of the Contractor, shall be restored to at least a condition equivalent to that which existed prior to the start of the work.

.3 Trenches shall be backfilled above the pipe zone with compacted backfill. This material shall be brought to a suitable height below the finished paved grade and compacted to 95% Modified Proctor density.

.4 On top of this material shall be placed 300 millimetres 150 mm minus pit-run compacted to 100%, and 100 millimetres 19 mm crush gravel compacted to 95% Modified Proctor density.

.5 The paved surface shall then be repaired with a compacted layer of hot mix asphaltic concrete 75 millimetres thick. The asphaltic concrete shall conform to current municipal standards.

.6 Equipment employed by the Contractor, mixing procedure, storage of liquid asphalt, transportation of mixture, spreading of mixture, compaction and finishing of asphaltic concrete mat, requirement of finished surface and all other technical requirements of the work under this section shall conform to current municipal standards.

1.39 SUBSTANTIAL PERFORMANCE PROCEDURE

.1 Prior to application for Certificate of Substantial Performance, carefully inspect the Work and ensure it is complete, that major and minor construction deficiencies are complete, defects are corrected and the building is clean and in condition for occupancy.

.2 The Contractor may make application to the Consultant for a Certificate of Substantial Performance when the Work is ready for use by the Owner for the purpose intended and when the following items have been provided (where applicable) to the Consultant. Notify the Consultant in writing that the building is ready for inspection for Substantial Performance.:

.1 All required manufacturer's inspections, certifications, guarantees, warranties as specified in the Contract Documents;

.2 All maintenance manuals, operating instructions, maintenance and operating tools, replacement parts or materials as specified the Contract Documents;

.3 Certification by all permit issuing authorities indicating approval of all permitted installations;

.4 Certification by all testing, cleaning, or Inspection Authorities or Associations as specified in the Contract Documents;

.5 Results of all tests required by the Contract Documents;

.6 All required "as-built" or "as-installed" record drawings in the form specified in the Contract Documents;

.7 Certification by WorkSafeBC that the Contractor and all Subcontractors are in good standing;

.8 Completed "Statutory Declaration" certifying payment of all sub-contractors.

.9 Statement indicating reconciliation of all Change Orders or claims to the Contract;

.10 Occupancy permit from the Local Authority;

.11 A list of major items to be completed or corrected, including the time required to perform the Work as well as the proposed completion date.

.12 Sign off all items on Consultant field reports to the satisfaction of the Consultant. Any items not completed must be accompanied by a realistic completion schedule.

.3 When the Work is substantially performed, remove surplus products, tools, construction machinery and equipment not required for the performance of the remaining Work.

.4 Remove waste materials and debris from the site at regularly scheduled times or dispose of as directed by the Consultant. Do not burn waste materials on site unless approved by the Consultant.

.5 Do final cleaning as follows:

.1 Leave the Work broom clean before the inspection process commences.

.2 Clean and polish finish surfaces including glass, mirrors, hardware, stainless steel, chrome, porcelain enamel, baked enamel, plastic laminate, mechanical and electrical fixtures where affected by work. Replace broken, scratched or disfigured glass.

.3 Remove stains, spots, marks and dirt form decorative work, electrical and mechanical fixtures, furniture fitments, walls and ceilings where affected by work.

.4 Vacuum clean and dust building interiors, behind grilles, louvres and screens where affected by work.

.5 Seal floor finishes as recommended by the manufacturer where affected by work.

.6 Broom clean and wash exterior walks, steps and surfaces where affected by work.

.7 Remove dirt and other disfigurations from exterior surfaces where affected by work.

.6 Demonstration and Inspection to Owner:

.1 Prior to Substantial Performance, demonstrate to and instruct the Owner's designated representative on the complete systems operating and maintenance procedures using the assistance of specialist sub-trades and manufacturer's representatives.

.2 Submit a program for approval to the Owner. When approval is obtained from the Design Authority and the Owner's designated representatives, arrange an acceptable time for the instruction periods.

.3 Obtain a signed statement from the Owner's designated representatives certifying that the demonstration and instruction have been given to his satisfaction.

.7 During the Consultant Inspection, a list of deficiencies and defects will be tabulated.

.8 A deficiency holdback will be established. This holdback shall be retained until all items on the deficiency list are completed. No interim payments will be released.

.9 Deficiency items shall be confirmed completed by all parties prior to Total Performance.

.10 Should the Consultant perform re-inspection due to failure of the Work to comply with the claims of status of completion made by the Contractor:

.11 Owner will compensate the Consultant for such additional services.

.12 Owner will deduct the amount of such compensation from the final payment to the Contractor.

.13 Submit operation and maintenance data, record (as-built) drawings and results of all Tests required by the Specification.

.14 Consultant will issue a final change order reflecting approved adjustments to contract price not previously made.

1.40 WARRANTY

.1 Provide a written warranty statement stating that any defects found in materials, workmanship and equipment shall be satisfactorily repaired and/or replaced at no cost to the Owner for one year after the date of Substantial Completion.

.2 Include the warranty statement in the Operating & Maintenance Manuals.

1.41 PROJECT CLOSE OUT

.1 Notify the Consultant in writing that all deficiencies have been corrected and that the building is ready for Final Inspection.

.2 Submit a final Statement of Account showing total adjusted Contract Price, previous payments and any other adjustments and monies due.

.3 Submit a current Statutory Declaration.

.4 Submit a WorkSafeBC Certificate of Compliance.

.5 Submit a current dated Land Title Search extract.

.6 Consultant will issue a final change order reflecting approved adjustments to contract price not previously made.

END OF SECTION

PART 1 General

1.1 RELATED SECTIONS

.1 Section 01 11 00 – Summary of Work.

1.2 USE OF SITE AND FACILITIES

.1 Execute work with least possible interference or disturbance to normal use of premises. Make arrangements with Owner to facilitate work as stated.

.2 Provide temporary construction hoarding or suitable dust barrier to prevent dust and contaminates from entering food preparation areas.

.3 Maintain existing services to building and provide for personnel and vehicle access.

.4 Owner will assign sanitary facilities for use by Contractor's personnel. Keep facilities clean.

.5 Closures: protect work temporarily until permanent enclosures are completed.

1.3 ALTERATIONS, ADDITIONS OR REPAIRS TO EXISTING BUILDING

.1 Execute work with least possible interference or disturbance to building operations, occupants, public and normal use of premises. Arrange with Owner and Consultant to facilitate execution of work.

1.4 EXISTING SERVICES

.1 Notify Owner, Consultant and utility companies of intended interruption of services and obtain required permission.

.2 Where Work involves breaking into or connecting to existing services, give Owner 7 days of notice for necessary interruption of mechanical or electrical service throughout course of work. Minimize duration of interruptions. Carry out interruptions after normal working hours of occupants and public use of premises.

.3 Provide for personnel, pedestrian and vehicular traffic.

.4 Construct barriers in accordance with Section 01 56 00 - Temporary Barriers and Enclosures.

1.5 SPECIAL REQUIREMENTS

.1 Submit schedule in accordance with Section 01 32 16 - Construction Progress Schedules - Bar (GANTT) Chart. Provide 2 week notice before starting work.

.2 Ensure that Contractor personnel employed on site become familiar with and obey regulations including safety, fire, traffic and security regulations.

.3 Keep within limits of work and avenues of ingress and egress.

PART 2 Products

2.1 NOT USED

.1 Not Used.

PART 3 Execution

3.1 NOT USED

.1 Not Used.

END OF SECTION

1 General

1.1 RELATED SECTIONS

.1 Section 01 33 00 – Submittal Procedures.

1.2 PRECONSTRUCTION MEETING

.1 Within 10 days after award of Contract, request a meeting of parties in contract to discuss and resolve administrative procedures and responsibilities.

.2 Representatives of the Owner, Consultant, Contractor, major Subcontractors, field inspectors and supervisors will be in attendance.

.3 Establish time and location of meeting and notify parties concerned minimum 10 days before meeting.

.4 Incorporate mutually agreed variations to Contract Documents into Agreement, prior to signing.

.5 Agenda to include:

.1 Appointment of official representative of participants in the Work.

.2 Schedule of Work in accordance with Section 01 32 16 - Construction Progress Schedules - Bar (GANTT) Chart.

.3 Schedule of submission of shop drawings, samples, colour chips. Submit submittals in accordance with Section 01 33 00 - Submittal Procedures.

.4 Requirements for temporary facilities, site sign, offices, storage sheds, utilities, fences in accordance with Section 01 52 00 - Construction Facilities.

.5 Delivery schedule of specified equipment.

.6 Site security in accordance with Section 01 56 00 - Temporary Barriers and Enclosures.

.7 Proposed changes, change orders, procedures, approvals required, mark-up percentages permitted, time extensions, overtime, administrative requirements.

.8 Owner provided products.

.9 Record drawings in accordance with Section 01 33 00 - Submittal Procedures.

.10 Maintenance manuals in accordance with Section 01 78 00 - Closeout Submittals.

.11 Take-over procedures, acceptance, warranties in accordance with Section 01 78 00 - Closeout Submittals.

.12 Monthly progress claims, administrative procedures, photographs, hold backs.

.13 Appointment of inspection and testing agencies or firms.

1.3 PROGRESS MEETINGS

.1 During course of Work and 2 weeks prior to project completion, schedule progress meetings weekly.

.2 Contractor, major Subcontractors involved in Work, Consultant and Owner are to be in attendance.

.3 Notify parties minimum 5 days prior to meetings.

.4 Record minutes of meetings and circulate to attending parties and affected parties not in attendance within 3 days after meeting.

.5 Agenda to include the following:

.1 Review, approval of minutes of previous meeting.

.2 Review of Work progress since previous meeting.

.3 Field observations, problems, conflicts.

.4 Problems which impede construction schedule.

.5 Review of off-site fabrication delivery schedules.

.6 Corrective measures and procedures to regain projected schedule.

.7 Revision to construction schedule.

.8 Progress schedule, during succeeding work period.

.9 Review submittal schedules: expedite as required.

.10 Maintenance of quality standards.

.11 Review proposed changes for affect on construction schedule and on completion date.

.12 Other business.

2 Products

2.1 NOT USED

.1 Not Used.

3 Execution

3.1 NOT USED

.1 Not Used.

END OF SECTION

1 GENERAL

1.1 RELATED SECTIONS

.1 Section 01 11 00 – Summary of Work.

.2 Section 01 31 19 – Project Meetings.

.3 Section 01 91 13 – General Commissioning (cx) Requirements.

1.2 DEFINITIONS

.1 Activity: element of Work performed during course of Project. Activity normally has expected duration, and expected cost and expected resource requirements. Activities can be subdivided into tasks.

.2 Bar Chart (GANTT Chart): graphic display of schedule-related information. In typical bar chart, activities or other Project elements are listed down left side of chart, dates are shown across top, and activity durations are shown as date-placed horizontal bars. Generally Bar Chart should be derived from commercially available computerized project management system.

.3 Baseline: original approved plan (for project, work package, or activity), plus or minus approved scope changes.

.4 Construction Work Week: Monday to Friday, inclusive, will provide five day work week and define schedule calendar working days as part of Bar (GANTT) Chart submission.

.5 Duration: number of work periods (not including holidays or other nonworking periods) required to complete activity or other project element. Usually expressed as work days or work weeks.

.6 Master Plan: summary-level schedule that identifies major activities and key milestones.

.7 Milestone: significant event in project, usually completion of major deliverable.

.8 Project Schedule: planned dates for performing activities and the planned dates for meeting milestones. Dynamic, detailed record of tasks or activities that must be accomplished to satisfy Project objectives. Monitoring and control process involves using Project Schedule in executing and controlling activities and is used as basis for decision making throughout project life cycle.

.9 Project Planning, Monitoring and Control System: overall system operated by Consultant to enable monitoring of project work in relation to established milestones.

1.3 REQUIREMENTS

.1 Ensure Master Plan and Detail Schedules are practical and remain within specified Contract duration.

.2 Plan to complete Work in accordance with prescribed milestones and time frame.

.3 Limit activity durations to maximum of approximately 2 working days, to allow for progress reporting.

.4 Ensure that it is understood that Award of Contract or time of beginning, rate of progress, Interim Certificate and Final Certificate as defined times of completion are of essence of this contract.

1.4 SUBMITTALS

.1 Provide submittals in accordance with Section 01 33 00 - Submittal Procedures.

.2 Submit to Consultant within 10 working days of Award of Contract Bar (GANTT) Chart as Master Plan for planning, monitoring and reporting of project progress.

.3 Submit Project Schedule to Consultant within 5 working days of receipt of acceptance of Master Plan.

1.5 MASTER PLAN

.1 Structure schedule to allow orderly planning, organizing and execution of Work as Bar Chart (GANTT).

.2 Consultant will review and return revised schedules within 5 working days.

.3 Revise impractical schedule and resubmit within 5 working days.

.4 Accepted revised schedule will become Master Plan and be used as baseline for updates.

1.6 PROJECT SCHEDULE

.1 Develop detailed Project Schedule derived from Master Plan.

.2 Ensure detailed Project Schedule includes as a minimum milestone and activity types as follows:

.1 Award.

.2 Shop Drawings, Samples.

.3 Permits.

.4 Mobilization.

.5 Plumbing.

.6 Piping.

.7 Testing and Commissioning.

.8 Supplied equipment long delivery items.

1.7 PROJECT SCHEDULE REPORTING

.1 Update Project Schedule on a weekly basis reflecting activity changes and completions, as well as activities in progress.

.2 Include as part of Project Schedule, narrative report identifying Work status to date, comparing current progress to baseline, presenting current forecasts, defining problem areas, anticipated delays and impact with possible mitigation.

1.8 PROJECT MEETINGS

.1 Discuss Project Schedule at regular site meetings, identify activities that are behind schedule and provide measures to regain slippage. Activities considered behind schedule are those with projected start or completion dates later than current approved dates shown on baseline schedule.

.2 Weather related delays with their remedial measures will be discussed and negotiated.

2 PRODUCTS

2.1 NOT USED

.1 Not used.

3 EXECUTION

3.1 NOT USED

.1 Not used.

END OF SECTION

1 General

1.1 RELATED SECTIONS

.1 Section 01 78 00 – Closeout Submittals.

1.2 ADMINISTRATIVE

.1 Submit to Consultant submittals listed for review. Submit promptly and in orderly sequence to not cause delay in Work. Failure to submit in ample time is not considered sufficient reason for extension of Contract Time and no claim for extension by reason of such default will be allowed.

.2 Do not proceed with Work affected by submittal until review is complete.

.3 Present shop drawings, product data, samples and mock-ups in Metric units.

.4 Where items or information is not produced in Metric units converted values are acceptable.

.5 Review submittals prior to submission to Consultant. This review represents that necessary requirements have been determined and verified, or will be, and that each submittal has been checked and co-ordinated with requirements of Work and Contract Documents. Submittals not stamped, signed, dated and identified as to specific project will be returned without being examined and considered rejected.

.6 Notify Consultant, in writing at time of submission, identifying deviations from requirements of Contract Documents stating reasons for deviations.

.7 Verify field measurements and affected adjacent Work are coordinated.

.8 Contractor's responsibility for errors and omissions in submission is not relieved by Consultant's review of submittals.

.9 Contractor's responsibility for deviations in submission from requirements of Contract Documents is not relieved by Consultant review.

.10 Keep one reviewed copy of each submission on site.

1.3 SHOP DRAWINGS AND PRODUCT DATA

.1 The term "shop drawings" means drawings, diagrams, illustrations, schedules, performance charts, brochures and other data which are to be provided by Contractor to illustrate details of a portion of Work.

.2 Indicate materials, methods of construction and attachment or anchorage, erection diagrams, connections, explanatory notes and other information necessary for completion of Work. Where articles or equipment attach or connect to other articles or equipment, indicate that such items have been co-ordinated, regardless of Section under which adjacent items will be supplied and installed. Indicate cross references to design drawings and specifications.

.3 Allow 10 working days for Consultant's review of each submission.

.4 Adjustments made on shop drawings by Consultant are not intended to change Contract Price. If adjustments affect value of Work, state such in writing to Consultant prior to proceeding with Work.

.5 Make changes in shop drawings as Consultant may require, consistent with Contract Documents. When resubmitting, notify Consultant in writing of revisions other than those requested.

.6 Accompany submissions with transmittal letter, containing:
- .1 Date.
- .2 Project title and number.
- .3 Contractor's name and address.
- .4 Identification and quantity of each shop drawing, product data and sample.
- .5 Other pertinent data.

.7 Submissions include:
- .1 Date and revision dates.
- .2 Project title and number.
- .3 Name and address of:
  - .1 Subcontractor.
  - .2 Supplier.
  - .3 Manufacturer.
- .4 Contractor's stamp, signed by Contractor's authorized representative certifying approval of submissions, verification of field measurements and compliance with Contract Documents.
- .5 Details of appropriate portions of Work as applicable:
  - .1 Fabrication.
  - .2 Layout, showing dimensions, including identified field dimensions, and clearances.
  - .3 Setting or erection details.
  - .4 Capacities.
  - .5 Performance characteristics.
  - .6 Standards.
  - .7 Operating weight.
  - .8 Wiring diagrams.
  - .9 Single line and schematic diagrams.
  - .10 Relationship to adjacent work.

.8 After Consultant's review, distribute copies.

.9 Submit 1 electronic copy of product data sheets or brochures for requirements requested in specification Sections and as requested by Consultant where shop drawings will not be prepared due to standardized manufacture of product.

.10 Submit 1 electronic copy of test reports for requirements requested in specification Sections and as requested by Consultant.
- .1 Report signed by authorized official of testing laboratory that material, product or system identical to material, product or system to be provided has been tested in accord with specified requirements.

.11 Submit 1 electronic copy of certificates for requirements requested in specification Sections and as requested by Consultant.
- .1 Statements printed on manufacturer's letterhead and signed by responsible officials of manufacturer of product, system or material attesting that product, system or material meets specification requirements.
- .2 Certificates must be dated after award of project contract complete with project name.

.12 Submit 1 hard copy of Operation and Maintenance Data for requirements requested in specification Sections and as requested by Consultant for review prior to preparing 4 hard copies for final submission.

.13 Delete information not applicable to project.

.14 Supplement standard information to provide details applicable to project.

.15 If upon review by Consultant, no errors or omissions are discovered or if only minor corrections are made, copies will be returned and fabrication and installation of Work may proceed. If shop drawings are rejected, noted copy will be returned and resubmission of corrected shop drawings, through same procedure indicated above, must be performed before fabrication and installation of Work may proceed.

1.4 CERTIFICATES AND TRANSCRIPTS

.1 Immediately after award of Contract, submit Workers' Compensation Board status.

.2 Submit transcription of insurance immediately after award of Contract.

2 Products

2.1 NOT USED

.1 Not Used.

3 Execution

3.1 NOT USED

.1 Not Used.

END OF SECTION

PART 1 General

1.1 SECTION INCLUDES

.1 Health and safety considerations required to ensure due diligence towards health and safety on construction site.

1.2 RELATED SECTIONS

.1 Section 01 31 19 – Project Meetings.

.2 Section 01 33 00 – Submittal Procedures.

1.3 REFERENCES

.1 Canada Labour Code, Part 2, Canada Occupational Safety and Health Regulations

.2 Health Canada/Workplace Hazardous Materials Information System (WHMIS)

.1 Material Safety Data Sheets (MSDS).

.3 Province of British Columbia

.1 Workers Compensation Act, RSBC 1996 - Updated 2006.

1.4 SUBMITTALS

.1 Make submittals in accordance with Section 01 33 00 - Submittal Procedures.

.2 Submit site-specific Health and Safety Plan: Within 5 days after date of Notice to Proceed and prior to commencement of Work. Health and Safety Plan must include:

.1 Results of site specific safety hazard assessment.

.2 Results of safety and health risk or hazard analysis for site tasks and operation.

.3 Submit 1 copy of Contractor's authorized representative's work site health and safety inspection reports to Consultant and authority having jurisdiction, weekly.

.4 Submit copies of reports or directions issued by Federal, Provincial and Territorial health and safety inspectors.

.5 Submit copies of incident and accident reports.

.6 Submit WHMIS MSDS - Material Safety Data Sheets in accordance with Section 02 81 01 - Hazardous Materials.

.7 Consultant's review of Contractor's final Health and Safety plan should not be construed as approval and does not reduce the Contractor's overall responsibility for construction Health and Safety.

1.5 FILING OF NOTICE

.1 File Notice of Project with Provincial authorities prior to beginning of Work.

1.6 SAFETY ASSESSMENT

.1 Perform site specific safety hazard assessment related to project.

1.7 MEETINGS

.1 Schedule and administer Health and Safety meeting with Consultant prior to commencement of Work.

1.8 REGULATORY REQUIREMENTS

.1 Do Work in accordance with Section 01 41 00 - Regulatory Requirements.

1.9 GENERAL REQUIREMENTS

.1 Develop written site-specific Health and Safety Plan based on hazard assessment prior to beginning site Work and continue to implement, maintain, and enforce plan until final demobilization from site. Health and Safety Plan must address project specifications.

.2 Consultant may respond in writing, where deficiencies or concerns are noted and may request re-submission with correction of deficiencies or concerns.

1.10 RESPONSIBILITY

.1 Be responsible for health and safety of persons on site, safety of property on site and for protection of persons adjacent to site and environment to extent that they may be affected by conduct of Work.

.2 Comply with and enforce compliance by employees with safety requirements of Contract Documents, applicable federal, provincial, territorial and local statutes, regulations, and ordinances, and with site-specific Health and Safety Plan.

1.11 COMPLIANCE REQUIREMENTS

.1 Comply with Workers Compensation Act, B.C.

1.12 UNFORSEEN HAZARDS

.1 When unforeseen or peculiar safety-related factor, hazard, or condition occur during performance of Work, follow procedures in place for Employee's Right to Refuse Work in accordance with Acts and Regulations of Province having jurisdiction and advise Consultant verbally and in writing.

1.13 HEALTH AND SAFETY CO-ORDINATOR

.1 Employ and assign to Work, competent and authorized representative as Health and Safety Co-ordinator. Health and Safety Co-ordinator must:

.1 Have working knowledge of occupational safety and health regulations.

.2 Be responsible for completing Contractor's Health and Safety Training Sessions and ensuring that personnel not successfully completing required training are not permitted to enter site to perform Work.

.3 Be responsible for implementing, enforcing daily and monitoring site-specific Contractor's Health and Safety Plan.

.4 Be on site during execution of Work and report directly to and be under direction of site supervisor.

1.14 POSTING OF DOCUMENTS

.1 Ensure applicable items, articles, notices and orders are posted in conspicuous location on site in accordance with Acts and Regulations of Province having jurisdiction, and in consultation with Consultant.

1.15 CORRECTION OF NON-COMPLIANCE

.1 Immediately address health and safety non-compliance issues identified by authority having jurisdiction or by Consultant.

.2 Provide Consultant with written report of action taken to correct non-compliance of health and safety issues identified.

.3 Consultant may stop Work if non-compliance of health and safety regulations is not corrected.

1.16 WORK STOPPAGE

.1 Give precedence to safety and health of public and site personnel and protection of environment over cost and schedule considerations for Work.

PART 2 Products

2.1 NOT USED

.1 Not used.

PART 3 Execution

3.1 NOT USED

.1 Not used.

END OF SECTION

1 GENERAL

1.1 RELATED SECTIONS

.1 Requirements applicable to all sections within Division 26.

1.2 REFERENCES

.1 Canadian Construction Documents Committee (CCDC)

.1 CCDC 2- Stipulated Price Contract.

1.3 INSPECTION BY AUTHORITY

.1 Refer to CCDC 2, GC 2.3.

.2 Allow Authorities Having Jurisdiction access to Work. If part of Work is in preparation at locations other than Place of Work, allow access to such Work whenever it is in progress.

.3 Give timely notice requesting inspection if Work is designated for special tests, inspections or approvals, instructions, or law of Place of Work.

.4 If Contractor covers or permits to be covered Work that has been designated for special tests, inspections or approvals before such is made, uncover such Work, have inspections or tests satisfactorily completed and make good such Work.

1.4 REVIEW BY CONSULTANT

.1 Consultant may order part of Work to be examined if Work is suspected to be not in accordance with Contract Documents. If, upon examination such work is found not in accordance with Contract Documents, correct such Work and pay cost of additional review and correction. If such Work is found in accordance with Contract Documents, Owner shall pay cost of examination and replacement.

1.5 ACCESS TO WORK

.1 Allow inspection/testing agencies access to Work

.2 Co-operate to provide reasonable facilities for such access.

1.6 PROCEDURES

.1 Notify appropriate agency and Consultant in advance of requirement for tests, in order that attendance arrangements can be made.

.2 Submit samples and/or materials required for testing, as specifically requested in specifications. Submit with reasonable promptness and in orderly sequence to not cause delays in Work.

.3 Provide labour and facilities to obtain and handle samples and materials on site. Provide sufficient space to store and cure test samples.

1.7 REJECTED WORK

.1 Refer to CCDC, GC 2.4.

.2 Remove defective Work, whether result of poor workmanship, use of defective products or damage and whether incorporated in Work or not, which has been rejected by Consultant as failing to conform to Contract Documents. Replace or re-execute in accordance with Contract Documents.

.3 Make good other Contractor's work damaged by such removals or replacements promptly.

.4 If in opinion of Consultant it is not expedient to correct defective Work or Work not performed in accordance with Contract Documents, Owner will deduct from Contract Price difference in value between Work performed and that called for by Contract Documents, amount of which will be determined by Consultant.

.5 The Contractor shall rectify, in a manner acceptable to the Owner and the Consultant, all defective work and deficiencies throughout the Work, whether or not they are specifically identified by the Owner or the Consultant.

1.8 REPORTS

.1 Submit 1 electronic copy of inspection and test reports to Consultant.

2 PRODUCTS

2.1 NOT USED

.1 Not Used.

3 EXECUTION

3.1 NOT USED

.1 Not Used.

END OF SECTION

1 GENERAL

1.1 RELATED SECTIONS

.1 Section 01 52 00 – Construction Facilities.

1.2 INSTALLATION AND REMOVAL

.1 Provide temporary utilities controls in order to execute work expeditiously.

.2 Remove from site all such work after use.

1.3 TEMPORARY COMMUNICATION FACILITIES

.1 Provide and pay for temporary telephone, fax, data, high speed internet hook up, lines and equipment necessary for own use.

2 PRODUCTS

2.1 NOT USED

.1 Not Used.

3 EXECUTION

3.1 NOT USED

.1 Not used.

END OF SECTION

PART 1 GENERAL

1.1 RELATED SECTIONS

.1 Section 01 51 00 – Temporary Utilities.

1.2 REFERENCES

.1 Canadian Construction Documents Committee (CCDC)
  .1 CCDC 2, Stipulated Price Contract.

.2 Canadian Standards Association (CSA International)
  .1 CAN/CSA-Z321, Signs and Symbols for the Occupational Environment.

1.3 INSTALLATION AND REMOVAL

.1 Provide construction facilities in order to execute work expeditiously.

.2 Remove from site all such work after use.

1.4 SCAFFOLDING

.1 Scaffolding in accordance with CAN/CSA-S269.2.

.2 Provide and maintain scaffolding, ramps, ladders, platforms and temporary stairs.

1.5 HOISTING

.1 Provide, operate and maintain hoists required for moving of workers, materials and equipment. Make financial arrangements with Subcontractors for their use of hoists.

.2 Hoists to be operated by qualified operator.

1.6 SITE STORAGE/LOADING

.1 Refer to CCDC 2, GC 3.12.

.2 Confine work and operations of employees by Contract Documents. Do not unreasonably encumber premises with products.

.3 Do not load or permit to load any part of Work with weight or force that will endanger Work.

1.7 CONSTRUCTION PARKING

.1 Parking will be permitted on site provided it does not disrupt performance and activities of the facility.

.2 Provide and maintain adequate access to project site.

1.8 EQUIPMENT, TOOL AND MATERIALS STORAGE

.1 Locate tools, equipment, and materials in area designated by owner.

.2 Provide and maintain, in clean and orderly condition, lockable weatherproof sheds for storage of tools, equipment and materials to be stored in a designated area outside.

1.9 SANITARY FACILITIES

.1 Provide sanitary facilities for work force in accordance with governing regulations and ordinances.

.2 Post notices and take precautions as required by local health authorities. Keep area and premises in sanitary condition.

.3 Take note that the contractor is not allowed to use the sites existing sanitary facilities

1.10 CLEAN-UP

.1 Remove construction debris, waste materials, packaging material from work site daily.

.2 Clean dirt or mud tracked onto paved or surfaced roadways.

.3 Store materials resulting from demolition activities that are salvageable.

.4 Stack stored new or salvaged material not in construction facilities.

PART 2 PRODUCTS

2.1 NOT USED

.1 Not Used.

PART 3 EXECUTION

3.1 NOT USED

.1 Not Used.

END OF SECTION

1 GENERAL

1.1 RELATED SECTIONS

.1 Requirements applicable to all sections within Division 26.

1.2 QUALITY

.1 Products, materials, equipment and articles incorporated in Work shall be new, not damaged or defective, and of best quality for purpose intended. If requested, furnish evidence as to type, source and quality of products provided.

.2 Defective products, whenever identified prior to completion of Work, will be rejected, regardless of previous inspections. Inspection does not relieve responsibility, but is precaution against oversight or error. Remove and replace defective products at own expense and be responsible for delays and expenses caused by rejection.

.3 Should disputes arise as to quality or fitness of products, decision rests strictly with Consultant based upon requirements of Contract Documents.

.4 Unless otherwise indicated in specifications, maintain uniformity of manufacture for any particular or like item throughout building.

.5 Permanent labels, trademarks and nameplates on products are not acceptable in prominent locations, except where required for operating instructions, or when located in mechanical or electrical rooms.

1.3 AVAILABILITY

.1 Immediately upon signing Contract, review product delivery requirements and anticipate foreseeable supply delays for items. If delays in supply of products are foreseeable, notify Consultant of such, in order that substitutions or other remedial action may be authorized in ample time to prevent delay in performance of Work.

.2 In event of failure to notify Consultant at commencement of Work and should it subsequently appear that Work may be delayed for such reason, Consultant reserves right to substitute more readily available products of similar character, at no increase in Contract Price or Contract Time.

1.4 STORAGE, HANDLING AND PROTECTION

.1 Handle and store products in manner to prevent damage, adulteration, deterioration and soiling and in accordance with manufacturer's instructions when applicable.

.2 Store packaged or bundled products in original and undamaged condition with manufacturer's seal and labels intact. Do not remove from packaging or bundling until required in Work.

.3 Store products subject to damage from weather in weatherproof enclosures.

.4 Remove and replace damaged products at own expense and to satisfaction of Consultant.

.5 Touch-up damaged factory finished surfaces to Consultant's satisfaction. Use touch-up materials to match original. Do not paint over name plates.

1.5 TRANSPORTATION

.1 Pay costs of transportation of products required in performance of Work.

1.6 MANUFACTURER'S INSTRUCTIONS

.1 Unless otherwise indicated in specifications, install or erect products in accordance with manufacturer's instructions. Do not rely on labels or enclosures provided with products. Obtain written instructions directly from manufacturers.

.2 Notify Consultant in writing, of conflicts between specifications and manufacturer's instructions, so that Consultant will establish course of action.

.3 Improper installation or erection of products, due to failure in complying with these requirements, authorizes Consultant to require removal and re-installation at no increase in Contract Price or Contract Time.

1.7 QUALITY OF WORK

.1 Ensure Quality of Work is of highest standard, executed by workers experienced and skilled in respective duties for which they are employed. Immediately notify Consultant if required Work is such as to make it impractical to produce required results.

.2 Do not employ anyone unskilled in their required duties. Consultant reserves right to require dismissal from site, workers deemed incompetent or careless.

.3 Decisions as to standard or fitness of Quality of Work in cases of dispute rest solely with Consultant, whose decision is final.

1.8 CO-ORDINATION

.1 Ensure co-operation of workers in laying out Work. Maintain efficient and continuous supervision.

.2 Be responsible for coordination and placement of openings, sleeves and accessories.

1.9 CONCEALMENT

.1 Before installation inform Consultant if there is interference. Install as directed by Consultant.

1.10 REMEDIAL WORK

.1 Refer to CCDC 2.

.2 Perform remedial work required to repair or replace parts or portions of Work identified as defective or unacceptable. Co-ordinate adjacent affected Work as required.

.3 Perform remedial work by specialists familiar with materials affected. Perform in a manner to neither damage nor put at risk any portion of Work.

1.11 LOCATION OF FIXTURES

.1 Consider location of fixtures, outlets and mechanical and electrical items indicated as approximate.

.2 Inform Consultant of conflicting installation. Install as directed.

1.12 FASTENINGS

.1 Provide metal fastenings and accessories in same texture, colour and finish as adjacent materials, unless indicated otherwise.

.2 Prevent electrolytic action between dissimilar metals and materials.

.3 Space anchors within individual load limit or shear capacity and ensure they provide positive permanent anchorage. Wood, or any other organic material plugs are not acceptable.

Keep exposed fastenings to a minimum, space evenly and install neatly..

1.13 FASTENINGS - EQUIPMENT

.1 Use fastenings of standard commercial sizes and patterns with material and finish suitable for service.

.2 Use heavy hexagon heads, semi-finished unless otherwise specified.

.3 Bolts may not project more than one diameter beyond nuts.

.4 Use plain type washers on equipment, sheet metal and soft gasket lock type washers where vibrations occur. Use resilient washers with stainless steel.

1.14 EXISTING UTILITIES

.1 When breaking into or connecting to existing services or utilities, execute Work at times directed by local governing authorities, with minimum of disturbance to Work, building occupants and pedestrian and vehicular traffic.

.2 Protect, relocate or maintain existing active services. When services are encountered, cap off in manner approved by authority having jurisdiction. Stake and record location of capped service.

2 PRODUCTS

2.1 NOT USED

.1 Not Used.

3 EXECUTION

3.1 NOT USED

.1 Not Used.

END OF SECTION

1 General

1.1 RELATED SECTIONS

.1 Requirements applicable to all sections within Division 26.

1.2 EXISTING SERVICES

Before commencing work, establish location and extent of service lines in area of Work and notify Consultant of findings.

1.3 LOCATION OF EQUIPMENT AND FIXTURES

.1 Location of equipment, fixtures and outlets indicated or specified are to be considered as approximate.

.2 Locate equipment, fixtures and distribution systems to provide minimum interference and maximum usable space and in accordance with manufacturer's recommendations for safety, access and maintenance.

.3 Inform Consultant of impending installation and obtain approval for actual location.

.4 Submit field drawings to indicate relative position of various services and equipment when required by Consultant.

1.4 SUBSURFACE CONDITIONS

.1 Promptly notify Consultant in writing if subsurface conditions at Place of Work differ materially from those indicated in Contract Documents, or a reasonable assumption of probable conditions based thereon.

.2 After prompt investigation, should Consultant determine that conditions do differ materially, instructions will be issued for changes in Work as provided in Changes and Change Orders.

2 Products

2.1 NOT USED

.1 Not Used.

3 Execution

3.1 NOT USED

.1 Not Used.

END OF SECTION

1 GENERAL

1.1 RELATED SECTIONS

.1 Section 01 71 00 – Examination and Preparation.

1.2 SUBMITTALS

.1 Submittals: in accordance with Section 01 33 00 - Submittal Procedures.

.2 Submit written request in advance of cutting or alteration which affects:

- .1 Structural integrity of elements of project.
- .2 Integrity of weather-exposed or moisture-resistant elements.
- .3 Efficiency, maintenance, or safety of operational elements.
- .4 Visual qualities of sight-exposed elements.

.3 Include in request:

- .1 Identification of project.
- .2 Location and description of affected Work.
- .3 Statement on necessity for cutting or alteration.
- .4 Description of proposed Work, and products to be used.
- .5 Alternatives to cutting and patching.
- .6 Effect on Work of Owner or separate contractor.
- .7 Written permission of affected separate contractor.
- .8 Date and time work will be executed.

1.3 MATERIALS

.1 Required for original installation.

.2 Change in Materials: Submit request for substitution in accordance with Section 01 33 00 - Submittal Procedures.

1.4 PREPARATION

.1 Inspect existing conditions, including elements subject to damage or movement during cutting and patching.

.2 After uncovering, inspect conditions affecting performance of Work.

.3 Beginning of cutting or patching means acceptance of existing conditions.

.4 Provide supports to assure structural integrity of surroundings; provide devices and methods to protect other portions of project from damage.

.5 Provide protection from elements for areas which are to be exposed by uncovering work; maintain excavations free of water.

1.5 EXECUTION

.1 Execute cutting, fitting, and patching including excavation and fill, to complete Work.

.2 Fit several parts together, to integrate with other Work.

.3 Uncover Work to install ill-timed Work.

.4 Remove and replace defective and non-conforming Work.

.5 Provide openings in non-structural elements of Work for penetrations of mechanical Work.

.6 Execute Work by methods to avoid damage to other Work, and which will provide proper surfaces to receive patching and finishing.

.7 Cut rigid materials using masonry saw or core drill. Pneumatic or impact tools not allowed on masonry work without prior approval.

.8 Restore work with new products in accordance with requirements of Contract Documents.

.9 Fit Work to pipes, sleeves, ducts, conduit, and other penetrations through surfaces.

.10 At penetration of fire rated wall, ceiling, or floor construction, completely seal voids with firestopping material in accordance with Section 07 84 00 - Firestopping, full thickness of the construction element.

.11 Refinish surfaces to match adjacent finishes: Refinish continuous surfaces to nearest intersection. Refinish assemblies by refinishing entire unit.

.12 Conceal pipes, ducts and wiring in floor, wall and ceiling construction of finished areas except where indicated otherwise.

2 PRODUCTS

2.1 NOT USED

.1 Not Used.

END OF SECTION

1 GENERAL

1.1 REFERENCES

.1 Canadian Construction Documents Committee (CCDC)

.1 CCDC 2, Stipulated Price Contract.

1.2 PROJECT CLEANLINESS

.1 Maintain Work in tidy condition, free from accumulation of waste products and debris, including that caused by Owner or other Contractors.

.2 Remove waste materials from site at daily regularly scheduled times or dispose of as directed by Consultant.

.3 Make arrangements with and obtain permits from authorities having jurisdiction for disposal of waste and debris.

.4 Provide on-site containers for collection of waste materials and debris.

.5 Dispose of waste materials and debris off site.

.6 Clean interior areas prior to start of finishing work, and maintain areas free of dust and other contaminants during finishing operations.

.7 Store volatile waste in covered metal containers, and remove from premises at end of each working day.

.8 Provide adequate ventilation during use of volatile or noxious substances. Use of building ventilation systems is not permitted for this purpose.

.9 Use only cleaning materials recommended by manufacturer of surface to be cleaned, and as recommended by cleaning material manufacturer.

.10 Schedule cleaning operations so that resulting dust, debris and other contaminants will not fall on wet, newly painted surfaces nor contaminate building systems.

1.3 FINAL CLEANING

.1 Refer to CCDC 2, GC 3.13.

.2 When Work is Substantially Performed remove surplus products, tools, construction machinery and equipment not required for performance of remaining Work.

.3 Remove waste products and debris other than that caused by others, and leave Work clean and suitable for occupancy.

.4 Prior to final review remove surplus products, tools, construction machinery and equipment.

.5 Remove waste products and debris including that caused by Owner or other Contractors.

.6 Remove waste materials from site at regularly scheduled times or dispose of as directed by Consultant.

.7 Make arrangements with and obtain permits from authorities having jurisdiction for disposal of waste and debris.

.8 Clean and polish hardware, wall tile, stainless steel, chrome, porcelain enamel, baked enamel, plastic laminate, and mechanical and electrical fixtures affected by the work.

.9 Remove stains, spots, marks and dirt from decorative work, electrical and mechanical fixtures, walls, floors and ceilings affected by the work.

.10 Wax, seal, shampoo or prepare floor finishes, as recommended by manufacturer.

.11 Inspect finishes, fitments and equipment and ensure specified workmanship and operation.

.12 Remove dirt and other disfiguration from exterior surfaces.

.13 Sweep and wash clean paved areas.

2 PRODUCTS

2.1 NOT USED

.1 Not Used.

3 EXECUTION

3.1 NOT USED

.1 Not Used.

END OF SECTION

PART 1 General

1.1 RELATED SECTIONS

.1 Section 01 33 00 – Submittal Procedures.
.2 Section 01 45 00 – Quality control.
.3 Section 01 79 00 – Demonstration and Training.

1.2 SUBMITTALS

.1 Submittals: in accordance with Section 01 33 00 - Submittal Procedures.
.2 Prepare instructions and data using personnel experienced in maintenance and operation of described products.
.3 Copy will be returned after final inspection, with Consultant's comments.
.4 Revise content of documents as required prior to final submittal.
.5 Two weeks prior to Substantial Performance of the Work, submit to the Consultant four final copies of operating and maintenance manuals in English.
.6 Ensure spare parts, maintenance materials and special tools provided are new, undamaged or defective, and of same quality and manufacture as products provided in Work.
.7 Furnish evidence, if requested, for type, source and quality of products provided.
.8 Defective products will be rejected, regardless of previous inspections. Replace products at own expense.
.9 Pay costs of transportation.

1.3 FORMAT

.1 Organize data as instructional manual.
.2 Binders: vinyl, hard covered, 3 'D' ring, loose leaf 219 x 279 mm with spine and face pockets.
.3 When multiple binders are used correlate data into related consistent groupings. Identify contents of each binder on spine.
.4 Cover: identify each binder with type or printed title 'Project Record Documents'; list title of project and identify subject matter of contents.
.5 Arrange content by systems, under sequence of Table of Contents.
.6 Provide tabbed fly leaf for each separate product and system, with typed description of product and major component parts of equipment.
.7 Text: manufacturer's printed data, or typewritten data.
.8 Drawings: provide with reinforced punched binder tab. Bind in with text; fold larger drawings to size of text pages.
.9 The consultant will provide scaled CAD files in dwg format on CD. The contractor is responsible for updating these CAD files to be reflective of the final installations.

1.4 CONTENTS - EACH VOLUME

.1 Table of Contents: provide title of project;
  .1 Date of submission; names.
  .2 Addresses, and telephone numbers of Consultant and Contractor with name of responsible parties.

.3 Schedule of products and systems, indexed to content of volume.

.2 For each product or system:

.1 List names, addresses and telephone numbers of subcontractors and suppliers, including local source of supplies and replacement parts.

.3 Product Data: mark each sheet to identify specific products and component parts, and data applicable to installation; delete inapplicable information.

.4 Drawings: supplement product data to illustrate relations of component parts of equipment and systems, to show control and flow diagrams.

.5 Typewritten Text: as required to supplement product data. Provide logical sequence of instructions for each procedure, incorporating manufacturer's instructions specified in Section 01 45 00 - Quality Control.

.6 Training: refer to Section 01 79 00 - Demonstration and Training.

1.5 AS-BUILTS AND SAMPLES

.1 Maintain, in addition to requirements in General Conditions, at site for Consultant one record copy of:

.1 Contract Drawings.

.2 Specifications.

.3 Addenda.

.4 Change Orders and other modifications to Contract.

.5 Reviewed shop drawings, product data, and samples.

.6 Field test records.

.7 Inspection certificates.

.8 Manufacturer's certificates.

.2 Store record documents and samples in field office apart from documents used for construction. Provide files, racks, and secure storage.

.3 Label record documents and file in accordance with Section number listings in List of Contents of this Project Manual. Label each document "PROJECT RECORD" in neat, large, printed letters.

.4 Maintain record documents in clean, dry and legible condition. Do not use record documents for construction purposes.

.5 Keep record documents and samples available for inspection by Consultant.

.6 The consultant will provide scaled CAD files in dwg format on CD. The contractor is responsible for updating these CAD files to be reflective of the final installations.

1.6 RECORDING ACTUAL SITE CONDITIONS

.1 Record information on set of black line opaque drawings, and in copy of Project Manual, provided by Consultant.

.2 Provide felt tip marking pens, maintaining separate colours for each major system, for recording information.

.3 Record information concurrently with construction progress. Do not conceal Work until required information is recorded.

.4 Contract Drawings and shop drawings: mark each item to record actual construction, including:

.1 Measured locations of internal utilities and appurtenances, referenced to visible and accessible features of construction.

.2 Field changes of dimension and detail.

.3 Changes made by change orders.

.4 Details not on original Contract Drawings.

.5 References to related shop drawings and modifications.

.5 Specifications: mark each item to record actual construction, including:

.1 Manufacturer, trade name, and catalogue number of each product actually installed, particularly optional items and substitute items.

.2 Changes made by Addenda and change orders.

.6 Other Documents: maintain manufacturer's certifications, inspection certifications, field test records, required by individual specifications sections.

1.7 EQUIPMENT AND SYSTEMS

.1 Each Item of Equipment and Each System: include description of unit or system, and component parts. Give function, normal operation characteristics, and limiting conditions. Include performance curves, with engineering data and tests, and complete nomenclature and commercial number of replaceable parts.

.2 Panel board circuit directories: provide electrical service characteristics, controls, and communications.

.3 Include installed colour coded wiring diagrams.

.4 Operating Procedures: include start-up, break-in, and routine normal operating instructions and sequences. Include regulation, control, stopping, shut-down, and emergency instructions. Include summer, winter, and any special operating instructions.

.5 Maintenance Requirements: include routine procedures and guide for trouble-shooting; disassembly, repair, and reassembly instructions; and alignment, adjusting, balancing, and checking instructions.

.6 Include manufacturer's printed operation and maintenance instructions.

.7 Provide original manufacturer's parts list, illustrations, assembly drawings, and diagrams required for maintenance.

.8 Provide Contractor's co-ordination drawings, with installed colour coded piping diagrams.

.9 Provide list of original manufacturer's spare parts, current prices, and recommended quantities to be maintained in storage.

.10 Additional requirements: as specified in individual specification sections.

1.8 WARRANTIES AND BONDS

.1 Develop warranty management plan to contain information relevant to Warranties.

.2 Warranty management plan to include required actions and documents to assure that Owner receives warranties to which it is entitled.

.3 Provide plan in narrative form and contain sufficient detail to make it suitable for use by future maintenance and repair personnel.

.4 Submit, warranty information made available during construction phase, Consultant for approval prior to each monthly pay estimate.

.5 Assemble approved information in binder and submit upon acceptance of work. Organize binder as follows:

.1 Separate each warranty or bond with index tab sheets keyed to Table of Contents listing.

.2 List subcontractor, supplier, and manufacturer, with name, address, and telephone number of responsible principal.

.3 Obtain warranties and bonds, executed in duplicate by subcontractors, suppliers, and manufacturers, within ten days after completion of applicable item of work.

.4 Verify that documents are in proper form, contain full information, and are notarized.

.5 Co-execute submittals when required.

.6 Retain warranties and bonds until time specified for submittal.

.6 Except for items put into use with Owner's permission, leave date of beginning of time of warranty until Date of Substantial Performance is determined.

.7 Include information contained in warranty management plan as follows:

.1 Roles and responsibilities of personnel associated with warranty process, including points of contact and telephone numbers within the organizations of Contractors, subcontractors, manufacturers or suppliers involved.

.2 Provide list for each warranted equipment, item, feature of construction or system indicating:

.1 Name of item.

.2 Model and serial numbers.

.3 Location where installed.

.4 Name and phone numbers of manufacturers or suppliers.

.5 Names, addresses and telephone numbers of sources of spare parts.

.6 Warranties and terms of warranty: include one-year overall warranty of construction. Indicate items that have extended warranties and show separate warranty expiration dates.

.7 Cross-reference to warranty certificates as applicable.

.8 Starting point and duration of warranty period.

.9 Summary of maintenance procedures required to continue warranty in force.

.10 Cross-Reference to specific pertinent Operation and Maintenance manuals.

.11 Organization, names and phone numbers of persons to call for warranty service.

.12 Typical response time and repair time expected for various warranted equipment.

.8 Respond in a timely manner to oral or written notification of required construction warranty repair work.

PART 2 PRODUCTS

2.1 NOT USED

.1 Not Used.

PART 3 EXECUTION

3.1 NOT USED

.1 Not Used.

END OF SECTION

1 GENERAL

1.1 RELATED SECTIONS

.1 Section 01 91 13 – General Commissioning (Cx) Requirements.

1.2 DESCRIPTION

.1 Demonstrate operation and maintenance of equipment and systems to Owner's personnel two weeks prior to date of substantial performance.

.2 Owner will provide list of personnel to receive instructions, and will co-ordinate their attendance at agreed-upon times.

1.3 QUALITY CONTROL

.1 When specified in individual Sections require manufacturer to provide authorized representative to demonstrate operation of equipment and systems, instruct Owner's personnel, and provide written report that demonstration and instructions have been completed.

1.4 SUBMITTALS

.1 Submittals: in accordance with Section 01 33 00 - Submittal Procedures].

.2 Submit schedule of time and date for demonstration of each item of equipment and each system two weeks prior to designated dates, for Consultant's approval.

.3 Submit reports within one week after completion of demonstration, that demonstration and instructions have been satisfactorily completed.

.4 Give time and date of each demonstration, with list of persons present.

1.5 CONDITIONS FOR DEMONSTRATIONS

.1 Testing, adjusting, and balancing has been performed [in accordance with Section 01 91 13 - General Commissioning (Cx) Requirements and equipment and systems are fully operational.

.2 Provide copies of completed operation and maintenance manuals for use in demonstrations and instructions.

1.6 PREPARATION

.1 Verify that conditions for demonstration and instructions comply with requirements.

.2 Verify that designated personnel are present.

1.7 DEMONSTRATION AND INSTRUCTIONS

.1 Demonstrate start-up, operation, control, adjustment, trouble-shooting, servicing, and maintenance of each item of equipment at scheduled times, at the equipment location.

.2 Instruct personnel in phases of operation and maintenance using operation and maintenance manuals as basis of instruction.

.3 Review contents of manual in detail to explain aspects of operation and maintenance.

.4 Prepare and insert additional data in operations and maintenance manuals when need for additional data becomes apparent during instructions.

2 PRODUCTS

2.1 NOT USED

.1 Not Used.

3 EXECUTION

3.1 NOT USED

.1 Not Used.

END OF SECTION

PART 1 GENERAL

1.1 SUMMARY

.1 Section Includes:

.1 General requirements relating to commissioning of project's components and systems, specifying general requirements to PV of components, equipment, sub-systems, systems, and integrated systems.

.2 Related Sections:

.1 Section 01 33 00 – Submittal Procedures.

.2 Section 01 79 00 – Demonstration and Training.

.3 Acronyms:

.1 BMM - Building Management Manual.

.2 Cx - Commissioning.

.3 EMCS - Energy Monitoring and Control Systems.

.4 O&M - Operation and Maintenance.

.5 PI - Product Information.

.6 PV - Performance Verification.

1.2 GENERAL

.1 Cx is a planned program of tests, procedures and checks carried out systematically on systems and integrated systems of the finished Project. Cx is performed after systems and integrated systems are completely installed, functional and Contractor's Performance Verification responsibilities have been completed and approved. Objectives:

.1 Verify installed equipment, systems and integrated systems operate in accordance with contract documents and design criteria and intent.

.2 Ensure appropriate documentation is compiled into the BMM.

.3 Effectively train O&M staff.

.2 Contractor assists in Cx process, operating equipment and systems, troubleshooting and making adjustments as required.

.1 Systems to be operated at full capacity under various modes to determine if they function correctly and consistently at peak efficiency. Systems to be interactively with each other as intended in accordance with Contract Documents and design criteria.

.2 During these checks, adjustments to be made to enhance performance to meet environmental or user requirements.

Design Criteria: as per client's requirements or determined by designer. To meet Project functional and operational requirements.

1.3 COMMISSIONING OVERVIEW

.1 Cx to be a line item of Contractor's cost breakdown.

.2 Cx activities supplement field quality and testing procedures described in relevant technical sections.

.3 Cx is conducted in concert with activities performed during stage of project delivery. Cx identifies issues in Planning and Design stages which are addressed during Construction and Cx stages to ensure the systems are constructed and proven to operate satisfactorily under weather, environmental and occupancy conditions to meet functional and operational requirements. Cx activities includes transfer of critical knowledge to facility operational personnel.

1.4 NON-CONFORMANCE TO PERFORMANCE VERIFICATION REQUIREMENTS

.1 Should equipment, system components, and associated controls be incorrectly installed or malfunction during Cx, correct deficiencies, re-verify equipment and components within the unfunctional system, including related systems as deemed required by Consultant to ensure effective performance.

.2 Costs for corrective work, additional tests, inspections, to determine acceptability and proper performance of such items to be borne by Contractor. Above costs to be in form of progress payment reductions or hold-back assessments.

1.5 PRE-CX REVIEW

.1 Before Construction:

- .1 Review contract documents, confirm by writing to Consultant.
  - .1 Adequacy of provisions for Cx.
  - .2 Aspects of design and installation pertinent to success of Cx.

.2 During Construction:

- .1 Co-ordinate provision, location and installation of provisions for Cx.

.3 Before start of Cx:

- .1 Have completed Cx Plan up-to-date.
- .2 Ensure installation of related components, equipment, sub-systems, systems is complete.
- .3 Fully understand Cx requirements and procedures.
- .4 Have Cx documentation shelf-ready.
- .5 Understand completely design criteria and intent and special features.
- .6 Submit complete start-up documentation to Consultant.
- .7 Have Cx schedules up-to-date.
- .8 Ensure systems have been cleaned thoroughly.
- .9 Ensure "As-Built" system schematics are available.

.4 Inform Consultant in writing of discrepancies and deficiencies on finished works.

1.6 CONFLICTS

.1 Report conflicts between requirements of this section and other sections to Consultant before start-up and obtain clarification.

.2 Failure to report conflict and obtain clarification will result in application of most stringent requirement.

1.7 SUBMITTALS

.1 Submittals: in accordance with Section 01 33 00 - Submittal Procedures.

- .1 Submit no later than 2 weeks after award of Contract:
  - .1 Name of Contractor's Cx agent.
  - .2 Draft Cx documentation.
  - .3 Preliminary Cx schedule.
- .2 Request in writing to Consultant for changes to submittals and obtain written approval at least 1 week prior to start of Cx.
- .3 Submit proposed Cx procedures to Consultant where not specified and obtain written approval at least 1 week prior to start of Cx.
- .4 Provide additional documentation relating to Cx process required by Consultant.

1.8 COMMISSIONING DOCUMENTATION

.1 Consultant to review and approve Cx documentation.

.2 Provide completed and approved Cx documentation to Consultant.

1.9 COMMISSIONING SCHEDULE

.1 Provide detailed Cx schedule as part of construction schedule in accordance with Section 01 32 16 - Construction Progress Schedules - Bar (GANTT) Chart.

.2 Provide adequate time for Cx activities prescribed in technical sections and commissioning sections including:

- .1 Approval of Cx reports.
- .2 Verification of reported results.
- .3 Repairs, retesting, re-commissioning, re-verification.
- .4 Training.

1.10 STARTING AND TESTING

.1 Contractor assumes liabilities and costs for inspections. Including disassembly and re-assembly after approval, starting, testing and adjusting, including supply of testing equipment.

1.11 MANUFACTURER'S INVOLVEMENT

.1 Obtain manufacturers installation, start-up and operations instructions prior to start-up of components, equipment and systems.

.1 Compare completed installation with manufacturer's published data, record discrepancies, and review with manufacturer.

.2 Modify procedures detrimental to equipment performance and review same with manufacturer before start-up.

.2 Integrity of warranties:

.1 Verify with manufacturer that testing as specified will not void warranties.

1.12 PROCEDURES

.1 Verify that equipment and systems are complete, clean, and operating in normal and safe manner prior to conducting start-up, testing and Cx.

.2 Conduct start-up and testing in following distinct phases:

.1 Included in delivery and installation:

.1 Verification of conformity to specification, approved shop drawings and completion of PI report forms.

.2 Visual inspection of quality of installation.

.2 Start-up: follow accepted start-up procedures.

.3 Operational testing: document equipment performance.

.4 System PV: include repetition of tests after correcting deficiencies.

.5 Post-substantial performance verification: to include fine-tuning.

.3 Correct deficiencies and obtain approval from Consultant after distinct phases have been completed and before commencing next phase.

.4 Document required tests on approved PV forms.

.5 Failure to follow accepted start-up procedures will result in re-evaluation of equipment by an independent testing agency selected by Consultant. If results reveal that equipment start-up was not in accordance with requirements, and resulted in damage to equipment, implement following:

.1 Minor equipment/systems: implement corrective measures approved by Consultant.

.2 Major equipment/systems: if evaluation report concludes that damage is minor, implement corrective measures approved by Consultant.

.3 If evaluation report concludes that major damage has occurred, Consultant shall reject equipment.

.1 Rejected equipment to be remove from site and replace with new.

.2 Subject new equipment/systems to specified start-up procedures.

1.13 OPERATION AND MAINTENANCE OF EQUIPMENT AND SYSTEMS

.1 After start-up, operate and maintain equipment and systems as directed by equipment/system manufacturer.

.2 With assistance of manufacturer develop written maintenance program and submit to Consultant for approval before implementation.

.3 Operate and maintain systems for length of time required for commissioning to be completed.

.4 After completion of commissioning, operate and maintain systems until issuance of certificate of interim acceptance.

1.14 TEST RESULTS

.1 If start-up, testing and/or PV produce unacceptable results, repair, replace or repeat specified starting and/or PV procedures until acceptable results are achieved.

.2 Provide manpower and materials, assume costs for re-commissioning.

1.15 START OF COMMISSIONING

.1 Notify Consultant at least 7 days prior to start of Cx.

.2 Start Cx after elements of building affecting start-up and performance verification of systems have been completed..

1.16 COMMISSIONING PERFORMANCE VERIFICATION

.1 Carry out Cx:

.1 Under actual operating conditions.

.2 On independent systems and interacting systems.

.2 Cx procedures to be repeatable and reported results are to be verifiable.

.3 Follow equipment manufacturer's operating instructions.

1.17 AUTHORITIES HAVING JURISDICTION

.1 Where specified start-up, testing or commissioning procedures duplicate verification requirements of authority having jurisdiction, arrange for authority to witness procedures so as to avoid duplication of tests and to facilitate expedient acceptance of facility.

.2 Obtain certificates of approval, acceptance and compliance with rules and regulation of authority having jurisdiction.

.3 Provide copies to Consultant within 5 days of test and with Cx report.

1.18 SUNDRY CHECKS AND ADJUSTMENTS

.1 Make adjustments and changes which become apparent as Cx proceeds.

.2 Perform static and operational checks as applicable and as required.

1.19 DEFICIENCIES, FAULTS, DEFECTS

.1 Correct deficiencies found during start-up and Cx to satisfaction Consultant.

.2 Report problems, faults or defects affecting Cx to Consultant in writing. Stop Cx until problems are rectified. Proceed with written approval from Consultant.

1.20 COMPLETION OF COMMISSIONING

.1 Upon completion of Cx leave systems in normal operating mode.

.2 Except for warranty and seasonal verification activities specified in Cx specifications, complete Cx prior to issuance of Interim Certificate of Completion.

.3 Cx to be considered complete when contract Cx deliverables have been submitted and accepted by Consultant.

1.21 ACTIVITIES UPON COMPLETION OF COMMISSIONING

.1 When changes are made to baseline components or system settings established during Cx process, provide updated Cx form for affected item.

1.22 MAINTENANCE MATERIALS, SPARE PARTS, SPECIAL TOOLS

.1 Supply, deliver, and document maintenance materials, spare parts, and special tools as specified in contract.

1.23 OWNER'S PERFORMANCE TESTING

.1 Performance testing of equipment or system by Consultant will not relieve Contractor from compliance with specified start-up and testing procedures.

PART 2 Products

2.1 NOT USED

.1 Not Used.

PART 3 Execution

3.1 NOT USED

.1 Not Used.

END OF SECTION

PART 1 GENERAL

1.1 RELATED SECTIONS

.1 Section 01 61 00 – Common Product Requirements

.2 Division 26 – Electrical.

1.2 REFERENCES

.1 Health Canada/Workplace Hazardous Materials Information System (WHMIS)
  .1 Material Safety Data Sheets (MSDS).

.2 Underwriter's Laboratories of Canada (ULC)
  .1 ULC-S115, Fire Tests of Fire stop Systems.

1.3 DEFINITIONS

.1 Fire Stop Material: device intended to close off opening or penetration during fire or materials that fill openings in wall or floor assembly where penetration is by cables, cable trays, conduits, ducts and pipes and poke-through termination devices, including electrical outlet boxes along with their means of support through wall or floor openings.

.2 Single Component Fire Stop System: fire stop material that has Listed Systems Design and is used individually without use of high temperature insulation or other materials to create fire stop system.

.3 Multiple Component Fire Stop System: exact group of fire stop materials that are identified within Listed Systems Design to create on site fire stop system.

1.4 SUBMITTALS

.1 Provide submittals in accordance with Section 01 33 00 - Submittal Procedures.

.2 Product Data:
  .1 Submit manufacturer's printed product literature, specifications and datasheet and include product characteristics, performance criteria, physical size, finish and limitations.

.3 Shop Drawings:
  .1 Submit shop drawings to show location, proposed material, reinforcement, anchorage, fastenings and method of installation.
  .2 Construction details should accurately reflect actual job conditions.

.4 Quality assurance submittals: submit following in accordance with Section 01 45 00 - Quality Control.
  .1 Test reports: in accordance with CAN-ULC-S101 for fire endurance and CAN-ULC-S102 for surface burning characteristics.

.1 Submit certified test reports from approved independent testing laboratories, indicating compliance of applied fire stopping with specifications for specified performance characteristics and physical properties.

.2 Certificates: submit certificates signed by manufacturer certifying that materials comply with specified performance characteristics and physical properties.

.3 Manufacturer's Instructions: submit manufacturer's installation instructions and special handling criteria, installation sequence, cleaning procedures.

1.5 QUALITY ASSURANCE

.1 Qualifications:

.1 Installer: person specializing in fire stopping installations with 5 years documented experience.

1.6 DELIVERY, STORAGE AND HANDLING

.1 Packing, shipping, handling and unloading:

.1 Deliver, store and handle materials in accordance with Section 01 61 00 - Common Product Requirements.

.2 Deliver, store and handle materials in accordance with manufacturer's written instructions.

.3 Deliver materials to the site in undamaged condition and in original unopened containers, marked to indicate brand name, manufacturer, ULC markings.

.2 Storage and Protection:

.1 Store materials[indoors in dry location and in accordance with manufacturer's recommendations in clean, dry, well-ventilated area.

.2 Replace defective or damaged materials with new.

PART 2 PRODUCTS

2.1 MATERIALS

.1 Fire stopping and smoke seal systems: in accordance with CAN-ULC-S115.

.1 Asbestos-free materials and systems capable of maintaining effective barrier against flame, smoke and gases in compliance with requirements of CAN-ULC-S115 and not to exceed opening sizes for which they are intended.

.2 Fire rated ceilings approved 3M product

.3 Service penetration assemblies: systems tested to CAN-ULC-S115.

.4 Service penetration fire stop components: certified by test laboratory to CAN-ULC-S115.

.5 Fire-resistance rating of installed fire stopping assembly in accordance with British Columbia Building Code.

.6 Fire stopping and smoke seals at openings intended for ease of re-entry such as cables: elastomeric seal.

.7 Fire stopping and smoke seals at openings around penetrations for pipes, ductwork and other mechanical items requiring sound and vibration control: elastomeric seal.

.8 Primers: to manufacturer's recommendation for specific material, substrate, and end use.

.9 Water (if applicable): potable, clean and free from injurious amounts of deleterious substances.

.10 Damming and backup materials, supports and anchoring devices: to manufacturer's recommendations, and in accordance with tested assembly being installed as acceptable to authorities having jurisdiction.

.11 Sealants for vertical joints: non-sagging.

PART 3 EXECUTION

3.1 MANUFACTURER'S INSTRUCTIONS

.1 Compliance: comply with manufacturer's written recommendations or specifications, including product technical bulletins, handling, storage and installation instructions, and datasheets.

3.2 PREPARATION

.1 Examine sizes and conditions of voids to be filled to establish correct thicknesses and installation of materials.

.1 Ensure that substrates and surfaces are clean, dry and frost free.

.2 Prepare surfaces in contact with fire stopping materials and smoke seals to manufacturer's instructions.

.3 Maintain insulation around pipes and ducts penetrating fire separation.

.4 Mask where necessary to avoid spillage and over coating onto adjoining surfaces; remove stains on adjacent surfaces.

3.3 INSTALLATION

.1 Install fire stopping and smoke seal material and components in accordance with manufacturer's certified tested system listing.

.2 Seal holes or voids made by through penetrations, poke-through termination devices, and unpenetrated openings or joints to ensure continuity and integrity of fire separation are maintained.

.3 Provide temporary forming as required and remove forming only after materials have gained sufficient strength and after initial curing.

.4 Tool or trowel exposed surfaces to neat finish.

.5 Remove excess compound promptly as work progresses and upon completion.

3.4 SEQUENCES OF OPERATION

.1 Proceed with installation only when submittals have been reviewed by Consultant.

.2 Mechanical pipe insulation: certified fire stop system component.

.1 Ensure pipe insulation installation precedes fire stopping.

3.5 FIELD QUALITY CONTROL

.1 Inspections: notify Consultant when ready for inspection and prior to concealing or enclosing fire stopping materials and service penetration assemblies.

3.6 CLEANING

.1 Proceed in accordance with Section 01 74 11 - Cleaning.

.2 On completion and verification of performance of installation, remove surplus materials, excess materials, rubbish, tools and equipment.

.3 Remove temporary dams after initial set of fire stopping and smoke seal materials.

3.7 SCHEDULE

.1 Fire stop and smoke seal at:

.1 Penetrations through fire-resistance rated masonry, concrete, and gypsum board partitions and walls.

.2 Penetrations through fire-resistance rated floor slabs, ceilings and roofs.

.3 Around mechanical and electrical assemblies penetrating fire separations.

END OF SECTION

1.1 GENERAL

.1 The General Conditions, Supplements and Amendments shall govern this Section (read in conjunction with Instructions to Tenders/Bidders). This Section covers items common to Sections of Division 26, and 28.

.2 Reference to "Electrical Division" shall mean all related Electrical Sections and components including Division 26.

.3 The word "Provide" shall mean "Supply & Install" the product and services specified. "As Indicated" means that the item(s) specified are shown on the drawings.

.4 Provide materials, equipment and devices of specified design, performance, intent and quality; and, current models with published certified ratings for which replacement parts are readily available. Provide project management and on-site supervision to undertake administration, meet schedule, ensure timely performance, ensure coordination and establish orderly completion and the delivery of a fully commissioned installation.

.5 The most stringent requirements of this section, other electrical sections and drawings shall govern.

.6 All work shall be in accordance with the project drawings and specifications and their intents complete with all necessary components, including those not normally shown or specified but required for a complete installation.

1.2 CODES AND STANDARDS

.1 Do complete installation in accordance with Canadian Electrical Code, CSA C22.1-2015.

.2 Comply with CSA Certification Standards and Electrical Bulletins in force at time of tender at time of tender submission.

.3 Perform work in accordance with CSA Z462 - Workplace Electrical Safety and WorkSafeBC.

1.3 DEFINITIONS

.1 Electrical and Electronic terms: unless otherwise specified or indicated, terms used in these specifications and on drawings are those defined by IEEE SP1122.

1.4 PERMITS, FEES

.1 Submit to Electrical Inspection Department necessary number of drawings and specifications for examination and approval prior to commencement of work.

.2 Pay associated fees.

.3 Obtain and pay for an electrical permit to cover all electrical, and telecommunications work.

.4 Submit a copy of electrical permit to the Departmental Representative prior to commencement of work on site.

.5 Departmental Representative will provide drawings and specifications required by Electrical Inspection Department at no cost.

.6 Notify Departmental Representative of changes required by Electrical Inspection Department prior to making changes.

.7 Furnish Certificates of Acceptance from Electrical Inspection Department on completion of work to Departmental Representative.

1.5 SHOP DRAWINGS, PRODUCT DATA AND SAMPLES

.1 Submit shop drawings, product data and samples in accordance with Division 1.

.2 Indicate details of construction, dimensions, capacities, weights and electrical performance characteristics of equipment or material.

.3 Where applicable, include wiring, single line and schematic diagrams.

.4 Include wiring drawings or diagrams showing interconnection with work of other Sections.

1.6 MAINTENANCE MATERIALS

.1 Provide maintenance materials in accordance with Division 26.

.2 Additional maintenance material requirements are included under various other Sections.

1.7 OPERATION AND MAINTENANCE DATA

.1 Provide operation and maintenance data for incorporation into operation and maintenance manual specified in Division 26.

.2 Include in operations and maintenance data:

.1 Details of design elements, construction features, component function and maintenance requirements, to permit effective start-up, operation, maintenance, repair, modification, extension and expansion of any portion or feature of installation.

.2 Technical data, product data, supplemented by bulletins, component illustrations, exploded views, technical descriptions of items, and parts lists. Advertising or sales literature not acceptable.

.3 Wiring and schematic diagrams and performance curves.

.4 Names and addresses of local suppliers for items included in maintenance manuals.

.5 Copy of reviewed shop drawings.

1.8 CARE, OPERATION AND START-UP

.1 Instruct Departmental Representative and operating personnel in the operation, care and maintenance of equipment.

.2 Provide these services for such period, and for as many visits as necessary to put equipment in operation, and ensure that operating personnel are conversant with all aspects of its care and operation.

1.9 VOLTAGE RATINGS

.1 Operating voltages: to CAN3-C235-83

.2 Motors, electric heating, control and distribution devices and equipment to operate satisfactorily at 60 Hz within normal operating limits established by above standard. Equipment to operate in extreme operating conditions established in above standard without damage to equipment.

1.10 MATERIALS AND EQUIPMENT

.1 Equipment and material to be new and CSA certified, and manufactured to standard quoted.

.2 Where there is no alternative to supplying equipment which is not CSA certified, obtain special approval from Inspection Department.

1.11 EQUIPMENT IDENTIFICATION

.1 Identify electrical equipment with nameplates as follows:

.1 Lamicoid 3 mm thick plastic engraving sheet, white face and black core, self-adhesive unless specified otherwise.

.2
NAMEPLATE SIZES

Size 1	10 x 50 mm	1 line	3 mm high letters
Size 2	12 x 70 mm	1 line	5 mm high letters
Size 3	12 x 70 mm	2 lines	3 mm high letters
Size 4	20 x 90 mm	1 line	8 mm high letters
Size 5	20 x 90 mm	2 lines	5 mm high letters
Size 6	25 x 100 mm	1 line	12 mm high letters
Size 7	25 x 100 mm	2 lines	6 mm high letters

.2 Wording on nameplates and labels to be approved by Departmental Representative prior to manufacture.

.3 Allow for average of twenty-five (25) letters per nameplate.

.4 Identification to be English.

.5 Nameplates for junction boxes to indicate system and/or voltage characteristics.

.6 Nameplates for pull boxes to indicate system and type of cable.

1.12 WIRING IDENTIFICATION

.1 Identify wiring with permanent indelible identifying markings, numbered plastic tapes, on both ends of phase conductors of feeders and branch circuit wiring.

.2 Maintain phase sequence and colour coding for 347/600 V, and 120/208V wiring throughout.

1.13 WIRING IDENTIFICATION IN UNDERGROUND PULL BOXES

.1 CABELS LABELS:

.1 Stainless steel, type 304, 0.737 mm thickness.

.2 approximately 38mm diameter.

.3 Hole at one end of label.

.4 Loop in label hole in addition to tie-wrap fastener on cable. Extra loop required to ensure label hangs freely. Stainless steel ring.

.5 Remove sharp edges.

.6 Cable identification laser-etched on label.

.7 Submit samples of etched label complete with holes, lop and tie-wraps for approval by Departmental Representative.

.8 Tie-wraps:

.1 Stainless steel (316) with locking device in head

.2 At least 4.5mm width for fastening to cables.

.9 Test 3 mm height minimum. Maximize test size to aid readability.

1.14 MOUNTING HEIGHTS

.1 Mounting height of equipment is from finished floor to centreline of equipment unless specified or indicated otherwise.

.2 If mounting height of equipment is not specified or indicated, verify before proceeding with installation.

1.15 PROTECTION

.1 Protect exposed live equipment during construction for personnel safety.

.2 Shield and mark live parts "LIVE 120 VOLTS", or with appropriate voltage.

1.16 CONDUIT AND CABLE INSTALLATION

.1 Refer to drawings for type of conduit and cable to be used.

.2 Install conduits to conserve headroom in exposed locations and cause minimum interference in spaces through which they pass.

.3 Run parallel or perpendicular to building lines.

1.17 CUTTING, CORING AND PATCHING

.1 Make arrangements with General Contractor for all cutting, coring and patching in this work.

.2 Conduct ground penetrating radar (GPR) scans prior to coring or cutting existing concrete slabs or walls.

1.18 FIRESTOPPING

.1 Where cables or conduits pass through fire rated ceilings and fire rated walls, pack space full with a ULC approved firestopping system.

1.19 FIELD QUALITY CONTROL

.1 Conduct and pay for testing, commissioning, demonstration and training of the following:

- .1 Insulation resistance testing:
  - .1 Megger circuits, feeders and equipment up to 350 V with a 500 V instrument.
  - .2 Check resistance to ground before energizing.
- .2 Circuits originating from branch distribution panels.
- .3 Backup generator, automatic transfer switch and Distribution equipment.
- .4 Fire alarm system.

.2 Refer to each Section for additional testing requirements.

.3 Provide instruments, meters, equipment and personnel required to conduct tests during and at conclusion of project.

.4 Provide these services for such period, and for as many visits as necessary to put equipment in operation, and ensure that each system is taken out of service the shortest possible amount of time.

.5 Submit test results for Departmental Representative review.

1.20 POWER INTERRUPTIONS

.1 Contractor shall work closely with Fisheries & Oceans personnel to arrange all interruptions of any portion of the existing electrical distribution systems.

.2 All interruptions to existing electrical distribution systems and shutdown of existing power distribution in the workshops building shall be carried out outside normal working hours, or on weekends. Normal working hours of Fisheries &

Oceans Canada are considered to be 0800 to 1600 hours, Monday through Friday, except holidays.

.3 Contractor shall submit request for any power shutdown 10 working days prior to such power shutdown. Request shall indicate start time of interruption and duration of interruption. Indicate in request exactly what buildings and/or systems will be affected by the requested power shutdown.

.4 No interruptions to power shall be carried out without the approval of the Departmental Representative.

1.21 CLEANING

.1 Do final cleaning in accordance with Division 26 and directed by the departmental representative.

.2 At time of final cleaning, clean luminaire reflectors, lenses, and other luminaire surfaces that have been exposed to construction dust and dirt.

1.22 RECORD DRAWINGS

.1 Refer to Division 26.

.2 Indicate conduit and cable runs, junction boxes and circuit numbers.

1.23 ENVIRONMENTAL PROTECTION AND WASTE MANAGEMENT

.1 Refer to Division 1.

.2 Refer to Division 1.

END OF SECTION

PART 1 General

1.1 SHOP DRAWINGS AND PRODUCT DATA

.1 Submit shop drawings and product data in accordance with Division 1.

1.2 WASTE MANAGEMENT AND DISPOSAL

.1 Refer to Division 1.

1.3 ENVIRONMENTAL PROTECTION

.1 Refer to Division 1.

PART 2 Products

2.1 BUILDING WIRES

.1 Conductors: stranded for 10 AWG and larger, minimum size 12 AWG.

.2 Copper conductors with 600 V insulation of chemically cross-linked thermosetting polyethylene material rated RW90.

2.2 ARMOURED CABLES

.1 Type AC90. Conductors: Insulated, copper, minimum size 12 AWG.

.2 Armour: interlocking type fabricated from aluminum strip.

PART 3 Execution

3.1 INSTALLATION OF BUILDING WIRES

.1 Install wiring as follows:

.1 In conduit systems in accordance with Section 26 05 34 – Conduits, Fastenings and Fittings.

.2 In underground ductbank systems in accordance with Section 26 05 44 – Installation of Cables in Ducts.

.2 Provide a green insulated bond conductor in all conduits sized in accordance with CSA C22.1-2015, Canadian Electrical Code, Part 1.

3.2 INSTALLATION OF ARMOURED CABLES

.1 Terminate cables using connectors approved for armoured cable.

END OF SECTION

PART 1 General

1.1 RELATED WORK

.1 This Section covers items common to Sections of Division 26 and 28. This Section supplements requirements of Division 01.

1.2 REGULATORY REQUIREMENTS

.1 Restraints shall meet the requirements of the National Building Code and the B.C. Building Code.

.2 All electrical and communications equipment that is new or being relocated is to be seismically restrained.

.3 Restraints shall meet the requirements of the ECA seismic restraint manual, latest edition.

1.3 SEISMIC RESTRAINT DESIGN AND INSPECTION

.1 Arrange and pay for the services of a Professional Engineer registered in the Province of BC. “Seismic Engineer” shall provide all required engineering services related to seismic restraints of the electrical and communications equipment.

.2 The Seismic Engineer shall provide assistance to the Contractor during the course of the equipment install if necessary.

.3 The Seismic Engineer shall inspect the completed seismic installation and shall submit a letter to the Departmental Representative stating that the complete seismic installation is installed in accordance with the Seismic Engineer’s drawings and it complies with all regulatory requirements.

1.4 SUBMITTALS

.1 Submit shop drawings of all restraining devices, including details of attachments to the structure, either tested in an independent testing laboratory or approved by a BC Registered Professional Engineer.

1.5 SCOPE OF WORK

.1 Provide restraint for electrical equipment, including but not limited to: generator concrete pad, transformers, conduits, panels and suspended luminaires, etc., to prevent injury or hazard to persons and equipment and to retain equipment in its normal position in the event of an earthquake.

.2 Provide all seismic restraint related hardware, including bolts and anchors, from point of attachment to equipment through to and including attachment to structure.

.3 It is the entire responsibility of equipment manufactures to design their equipment so that the strength and anchorage of internal components of the equipment exceeds the force level used to restrain and anchor the unit itself to the supporting structure.

PART 2 Products

2.1 GENERAL

.1 Provide anchor bolts, straps and other mounting materials as specified by Seismic Engineer.

PART 3 Execution

3.1 INSTALLATION

.1 Carry out all seismic restraint works on electrical equipment as per the recommendations of the Seismic Engineer and in accordance with all regulatory requirements.

.2 Co-ordinate the work with other trades as required.

END OF SECTION

PART 1 General

1.1 REFERENCES

.1 CSA C22.1-2015 Canadian Electrical Code, Part 1.

1.2 SHOP DRAWINGS AND PRODUCT DATA

.1 Submit shop drawings and product data in accordance with Division 1.

1.3 WASTE MANAGEMENT AND DISPOSAL

.1 Refer to Division 1.

1.4 ENVIRONMENTAL PROTECTION

.1 Refer to Division 1.

PART 2 Products

2.1 EQUIPMENT (GENERAL)

.1 Clamps for grounding of conductor, size as required.

.2 System and circuit, equipment, grounding conductors, bare stranded copper, untinned, soft annealed, size as indicated.

.3 Insulated grounding conductors: green, type RW90.

.4 Non-corroding accessories necessary for grounding system, type, size, material as indicated, including but not necessarily limited to:

- .1 Grounding and bonding bushings.
- .2 Protective type clamps.
- .3 Bolted type conductor connectors.
- .4 Bonding jumpers, straps.
- .5 Pressure wire connectors.

PART 3 Execution

3.1 INSTALLATION GENERAL

.1 Install complete permanent, continuous, communications, equipment, grounding systems including, conductors, connectors, accessories, as indicated, to conform to requirements of Departmental Representative, and local authority having jurisdiction over installation.

.2 Install connectors in accordance with manufacturer’s instructions.

.3 Protect exposed grounding conductors from mechanical injury.

.4 Use mechanical connectors for grounding connections to equipment provided with lugs.

.5 Soldered joints not permitted.

.6 Provide a green insulated bond conductor in all conduits and ducts.

3.2 SYSTEM AND CIRCUIT GROUNDING

.1 Existing building grounding system to remain. Tie-in new and relocated equipment to the existing system.

.2 Install system and circuit grounding connections to neutral of secondary 120/208V system.

.3 Install system and circuit grounding connections to neutral of secondary 277/480V system.

.4 Install system and circuit grounding connections to neutral of secondary 347/600V system.

3.3 EQUIPMENT GROUNDING

.1 Install grounding connections to typical equipment included in, but not necessarily limited to transformers, panels, telephone protection blocks, and telephone cabinet.

3.4 FIELD QUALITY CONTROL

.1 Perform tests in accordance with Section 26 05 00 – Common Work Results - Electrical.

.2 Perform ground continuity and resistance tests using method appropriate to site conditions and to approval of Departmental Representative and local authority having jurisdiction over installation.

.3 Perform tests before energizing equipment.

END OF SECTION

PART 1 General

1.1 RELATED SECTIONS

.1 Division 1 for Construction/Demolition Waste Management and Disposal.

1.2 WASTE MANAGEMENT AND DISPOSAL

.1 Separate and recycle waste materials in accordance with Division 1 for Construction/Demolition Waste Management and Disposal.

.2 Remove from site and dispose of all packaging materials at appropriate recycling facilities.

.3 Collect and separate for disposal paper, plastic, polystyrene and corrugated cardboard packaging material in appropriate on-site bins for recycling in accordance with Waste Management Plan.

.4 Divert unused metal, conduit and wiring materials from landfill to metal recycling facility as approved by Departmental Representative.

.5 Fold up metal banding, flatten and place in designated area for recycling.

PART 2 Products

2.1 SUPPORT CHANNELS

.1 U shape, size 41 x 41 mm, 2.5 mm thick, suspended.

PART 3 Execution

3.1 INSTALLATION

.1 Secure equipment to masonry, tile and plaster surfaces with lead anchors or nylon shields.

.2 Secure equipment to poured concrete with expandable inserts.

.3 Secure equipment to hollow masonry walls or suspended ceilings with toggle bolts.

.4 Secure surface mounted equipment with twist clip fasteners to inverted T bar ceilings. Ensure that T bars are adequately supported to carry weight of equipment specified before installation.

.5 Support equipment, conduit or cables using clips, spring loaded bolts, cable clamps designed as accessories to basic channel members.

.6 Fasten exposed conduit or cables to building construction or support system using straps.

.1 One-hole steel straps to secure surface conduits and cables 50 mm and smaller.

.2 Two-hole steel straps for conduits and cables larger than 50 mm.

.3 Beam clamps to secure conduit to exposed steel work.

.7 Suspended support systems.

.1 Support individual cable or conduit runs with 6 mm dia threaded rods and spring clips.

.2 Support 2 or more cables or conduits on channels supported by 6 mm dia threaded rod hangers where direct fastening to building construction is impractical.

.8 For surface mounting of two or more conduits use channels at 5 m on centre spacing.

.9 Provide metal brackets, frames, hangers, clamps and related types of support structures where indicated or as required to support conduit and cable runs.

.10 Ensure adequate support for raceways and cables dropped vertically to equipment where there is no wall support.

.11 Do not use wire lashing or perforated strap to support or secure raceways or cables.

.12 Do not use supports or equipment installed for other trades for conduit or cable support except with permission of other trade and approval of the Departmental Representative.

.13 Install fastenings and supports as required for each type of equipment cables and conduits, and in accordance with manufacturer's installation recommendations.

END OF SECTION

PART 1 General

1.1 RELATED WORK

.1 Section 26 05 00 - Common Work Results - Electrical

1.2 SHOP DRAWINGS AND PRODUCT DATA

.1 Submit shop drawings and product data in accordance with Division 1.

1.3 WASTE MANAGEMENT AND DISPOSAL

.1 Refer to Division 1.

1.4 ENVIRONMENTAL PROTECTION

.1 Refer to Division 1.

PART 2 Products

2.1 JUNCTION AND PULL BOXES

.1 Welded steel construction with screw-on flat covers for surface mounting.

.2 Covers with 25 mm minimum extension all around, for flush-mounted pull and junction boxes.

.3 Minimum size: 104 mm square unless shown otherwise, maximum fill as per CEC22.1.

.4 Pull Boxes dimensions as shown on the drawings.

.5 Weatherproof with rain tight seal and fittings for all outside installation.

2.2 TELEPHONE CABINETS

.1 N/A

PART 3 Execution

3.1 JUNCTION AND PULL BOX INSTALLATION

.1 Install pull boxes in inconspicuous but accessible locations.

.2 All junction and pull boxes are not indicated. Install pull boxes so as not to exceed 30 m of conduit run between pull boxes.

.3 Ground pull boxes as indicated.

3.2 TELEPHONE CABINET INSTALLATION

.1 Install telephone cabinet as indicated.

.2 Install all equipment as indicated within cabinet.

.3 Ground cabinet to communications ground bar using #6 insulated ground wire in EMT conduit.

3.3 IDENTIFICATION

.1 Provide equipment identification in accordance with Section 26 05 00 - Common Work Results - Electrical.

.2 Install size 2 identification lamicoids indicating system name on pull boxes and junction boxes.

.3 Install size 6 identification lamicoid on telephone cabinet.

END OF SECTION

PART 1 General

1.1 REFERENCES

.1 CSA C22.1-2015 Canadian Electrical Code, Part 1.

1.2 SHOP DRAWINGS AND PRODUCT DATA

.1 Submit shop drawings and product data in accordance with Division 1.

1.3 WASTE MANAGEMENT AND DISPOSAL

.1 Refer to Division 1.

1.4 ENVIRONMENTAL PROTECTION

.1 Refer to Division 1.

PART 2 Products

2.1 RECESSED OUTLET AND CONDUIT BOXES GENERAL

.1 Size boxes in accordance with CSA C22.1.

.2 102 mm square or larger outlet boxes as required for special devices.

.3 102 mm square outlet boxes for lighting fixture outlets.

.4 102 mm square outlet boxes with extension and plaster rings for flush mounting devices in finished walls.

.5 Gang boxes where wiring devices are grouped.

.6 Blank cover plates for boxes without wiring devices.

2.2 SURFACE CONDUIT AND DEVICE BOXES

.1 Cast aluminum, one or two gang FS or FD boxes with factory threaded hubs and mounting feet for all boxes mounted on structural steel or finished wall finish.

2.3 FITTINGS - GENERAL

.1 Bushing and connectors with nylon insulated throats.

.2 Knock-out fillers to prevent entry of debris.

.3 Conduit outlet bodies for conduit up to 35 mm and pull boxes for larger conduits.

.4 Double locknuts and insulated bushings on sheet metal boxes.

PART 3 Execution

3.1 INSTALLATION

.1 Support boxes independently of connecting conduits.

.2 Fill boxes with paper, sponges or foam or similar approved material to prevent entry of debris during construction. Remove upon completion of work.

.3 For flush installations mount outlets flush with finished wall using plaster rings to permit wall finish to come within 6 mm of opening.

.4 Provide correct size of openings in boxes for conduit and armoured cable connections. Reducing washers are not allowed.

END OF SECTION

PART 1 General

1.1 LOCATION OF CONDUIT

.1 Drawings do not show all conduits. Those shown are in diagrammatic form only.

1.2 CONDUIT SIZES

.1 Note that conduit sizes referenced in the 2015, Canadian Electrical Code are used.

1.3 WASTE MANAGEMENT AND DISPOSAL

.1 Refer to Division 1.

1.4 ENVIRONMENTAL PROTECTION

.1 Refer to Division 1.

PART 2 Products

2.1 CONDUITS

.1 Underground ducts: rigid type PVC, size as indicated.

.2 Electrical metallic tubing (EMT): to CSA C22.2 No. 83, with couplings.

.3 Rigid steel conduit: to CSA C22.2 No. 45, galvanized steel, threaded.

.4 Flexible metal conduit: to CSA C22.2 No. 56, steel.

2.2 CONDUIT FASTENINGS

.1 One hole steel straps to secure surface conduits 50 mm and smaller.

.2 Two hole steel straps for conduits larger than 50 mm.

.3 Channel type supports for two or more conduits at 1.5 m on centre.

.4 Threaded rods, 6 mm diameter, to support suspended channels.

2.3 CONDUIT FITTINGS

.1 Fittings: manufactured for use with conduit specified. Coating: same as conduit.

.2 EMT couplings and connectors shall be malleable steel, set screw type. Connectors shall have insulated throats. Cast fittings are not acceptable.

2.4 FISH CORD

.1 Polypropylene.

PART 3 Execution

3.1 INSTALLATION

.1 All wiring to be in Electrical metallic tubing (EMT) type conduit unless otherwise indicated on drawings.

.2 Install wiring in threaded Rigid Steel Conduit where indicated on drawings.

.3 Install conduits to conserve headroom in exposed locations and cause minimum interference in spaces through which they pass.

.4 Conceal conduits above T-Bar Ceiling “for fire alarm system wiring/conduits”.

.5 Where conduits become blocked, remove and replace blocked section. Do not use liquids to clean out conduits.

.6 Bend conduit cold. Replace conduit if kinked or flattened more than 1/10th of its original diameter.

.7 Mechanically bend steel conduit over 21 mm diameter.

.8 Dry conduits out before installing wire.

.9 Install fish cord in empty conduits.

3.2 SURFACE CONDUITS

.1 Run parallel or perpendicular to building lines.

.2 Group conduits wherever possible on surface channels.

.3 Do not pass conduits through structural members except as indicated.

3.3 CONCEALED CONDUITS

.1 Run parallel or perpendicular to building lines.

END OF SECTION

PART 1 General

1.1 REFERENCES

.1 CSA C22.1-2015 Canadian Electrical Code, Part 1.

1.2 RELATED WORK

.1 Division 1.

.2 Section 26 05 00 – Common Work Results – Electrical.

.3 Section 26 05 21 – Wire and Cables.

.4 Section 26 05 34 – Conduits, Fastenings and Fittings.

1.3 ENVIRONMENTAL PROTECTION

.1 Refer to Division 1.

1.4 ENVIRONMENTAL PROTECTION

.1 Refer to Division 1.

PART 2 Execution

2.1 INSTALLATION

.1 Install cables as indicated in ducts.

.2 Do not pull spliced cables in ducts.

.3 Install multiple cables in ducts simultaneously.

.4 Use CSA approved lubricants of type compatible with cable jacket to reduce pulling tension.

.5 Use specified rope to pull cables into ducts.

.6 Before pull cables into ducts and until cables are properly terminated, seal end of cables with moisture seal tape.

.7 After installation of cables, seal duct ends with duct seal compound.

.8 Provide pull string in all ducts for future use.

2.2 FIELD QUALITY CONTROL

.1 Perform tests of each type of cable and system as indicated.

.2 Remove and replace entire length of cable if cable fails to meet any test criteria.

END OF SECTION

PART 1 General

1.1 RELATED WORK

.1 Section 26 05 00 – Common Work

.2 Section 26 05 25 – Seismic Restraints

PART 2 Products

2.1 CUSTOMER METERING SYSTEM

.1 To consist of Measurement Canada Approved electronic meters, current transformers, and communications system as shown on drawings and described herein.

.2 The meter shall be capable of displaying the following: Voltage, current, power, frequency, power factor, demand, energy, time-of-use metering, harmonics measurement (up to 31st), Sequence-of-events, historical trends, and high-speed snapshot recording

.3 The meters will be capable of remote communication, utilizing Modbus RTU protocol.

.4 Provide a software package to install in the department representative's remote computer for meter reading, data storage and generating billing information via web server (Ethernet LAN/WAN).

.5 System shall have backup storage power to key components so that no data is lost during power outages. The system shall continue to function after resumption of power.

.6 Failure of the building electrical normal power system shall not result in loss of data and will not require manual restarting of the metering system.

.7 Provide interconnection to the existing site power metering network. Allow for all cabling, software and reprogramming requirements for interconnection.

2.2 SYSTEM MEASUREMENT

.1 Meters shall be complete with a Liquid Crystal Display (LCD) to access all measurements and phase diagnostics.

.2 Measurement Parameters:

.1	KWHR	real consumption
.2	KW	average demand

.3 KW instantaneous demand
.4 KVAH apparent consumption
.5 KVA apparent demand
.6 Meter readings at the meter
.7 Provide training and software manual for Department representative's staff.

2.3 METERS

.1 SEL Power system or approved equal.

2.4 ENCLOSURE

.1 NEMA 1 meter enclosure.

2.5 METER COMMUNICATIONS

.1 Modbus protocol for data communications.

.2 Ethernet LAN/WAN communications.

.3 RS232, port for modem connections.

2.6 METER SOFTWARE

.1 Meter Interface Software shall be Windows compatible and able to export meter data into database and spreadsheet programs.

.2 Software shall be capable of providing locked levels of access to various users and should be capable of integration with the existing metering system.

PART 3 Execution

3.1 WIRING AND CONNECTIONS

.1 Refer to manufacturer’s installation drawings for wiring details.

.2 Provide metering points as shown on Drawings.

.3 Provide circuit breakers for power feeding the meters.

3.2 FIELD VERIFICATION, ACCEPTANCE & TRAINING

.1 Manufacturer’s representative shall verify, adjust and test the system. Verification to be carried out with the assistance of the electrical contractor. Upon completion, the manufacturer shall issue a “CERTIFICATE OF ACCEPTANCE” to the Departmental Representative and Contractor.

.2 Manufacturer's representative shall demonstrate operation of the system as follows:

END OF SECTION

PART 1 General

1.1 RELATED WORK

.1 Materials and components for dry type transformers up to 600 V primary, equipment identification and transformer installation.

1.2 RELATED SECTIONS

.1 Division 1 - Submittal Procedures.

.2 Division 1 - Waste Management and Disposal.

.3 Section 26 05 00 - Common Work Results.

1.3 REFERENCES

.1 Canadian Standards Association (CSA International)

.2 CAN/CSA-C22.2 No. 47-M90 (R2001), Air-Cooled Transformers (Dry Type)

.3 CSA C9-M1981 (R2001), Dry-Type Transformers

.4 National Electrical Manufacturers Association (NEMA)

1.4 PRODUCT DATA

.1 Submit product data in accordance with Section 01 33 00 - Submittal Procedures.

1.5 WASTE MANAGEMENT AND DISPOSAL

.1 Separate and recycle waste materials in accordance with Division 1 - Waste Management and Disposal.

1.6 SHOP DRAWINGS AND PRODUCT DATA

.1 Submit shop drawings and product data in accordance with Section 26 05 00.

PART 2 Products

2.1 TRANSFORMERS

.1 Use transformers of one manufacturer throughout project and in accordance with CAN/CSA-C22.2 No. 47, CSA-C802.2-00.

.2 Design

.1 Ventilated: Type ANN

.2 3-phase, 3-winding, 600 V delta primary, 277/480 or 120/208 V grounded 3-winding Wye secondary, 60 Hz as shown on the drawings.

.3 Voltage taps: four 2½% primary taps (2FCAN, 2FCBN) brought out to a terminal board.

.4 Insulation: Class 220, 150°C average temperature rise.

.5 Basic Impulse Level (BIL): standard.

.6 Hi-pot: standard.

.7 Windings: copper (K factor of 13).

.8 The core and coil shall be isolated from the enclosure to reduce noise and vibration by means of neoprene rubber or isomode vibration dampening effect based on the weight of the core and coil unit.

.9 Finish: in accordance with Section 26 05 00 Common Work Electrical.

.10 Average sound level: standard.

.11 Impedance at 170°C: standard.

.12 Enclosure: NEMA 1

.13 Transformer shall be specifically designed to supply 100% of the 60 Hz fundamental rated current,

.1 33% of the fundamental current as third harmonic;

.2 20% of the fundamental current as fifth harmonic;

.3 14% of the fundamental current as seventh harmonic;

.4 11% of the fundamental current as ninth harmonic and lower proportional percentages of the fundamental current through the 25th harmonic. Mark transformers with a label stating “Suitable for Non-Sinusoidal Current Load with K-Factor not to exceed 13 deg.

.14 The core flux density shall be well below the saturation point to prevent core saturation caused by the harmonic even with a 10% primary overvoltage. The transformer core shall be constructed of grain oriented M6 or better; high grade non-aging silicon steel laminations of the mitre type construction.

.15 The secondary neutral shall be twice the ampacity of the secondary phase conductors and the primary winding conductor shall be of sufficient size to limit the temperature rise to its rated value even with the circulation third harmonic current.

.16 Transformers shall be complete with sprinkler-proof hoods.

.17 Transformers shall be manufactured and tested (production tests) in accordance with CSA C802.2-00 incorporating modifications as specified herein.

2.2 EQUIPMENT IDENTIFICATION

.1 Provide equipment identification in accordance with Section 26 05 00 - Common Work Results.

.2 Label size: 7.

.3 Nameplate wording to match Single Line Diagram.

PART 3 Execution

3.1 INSTALLATION

.1 Mount dry type transformers on minimum 2” thick concrete housekeeping pad, unless otherwise noted.

.2 Ensure adequate clearance around transformer for ventilation.

.3 Install transformers in level upright position.

.4 Remove shipping supports only after transformer is installed and just before putting into service.

.5 Loosen isolation pad bolts until no compression is visible.

.6 Make primary and secondary connections in accordance with wiring diagram. Conductors shall not enter the transformer through the top of the enclosure

.7 Make flexible conduit connections on both primary and secondary sides of all transformers.

.8 Ground transformer per Canadian Electrical Code.

.9 Energize transformers after installation is complete.

.10 Provide seismic support and restraint for all new transformers.

END OF SECTION

PART 1 General

1.1 RELATED SECTIONS

.1 Section 26 05 00 – Common Work

.2 Section 26 05 34 – Conduits, Conduit Fastenings, and Conduit Fittings

.3 Section 26 28 21 – Moulded Case Circuit Breaker

.4 Division 01 – Submittal Procedures

.5 Division 01 – Waste Management and Disposal

1.2 SHOP DRAWINGS

.1 Submit shop drawings and product data in accordance with Division 1.

.2 Drawings to include electrical detail of panel, branch breaker type, quantity, ampacity and enclosure dimension.

1.3 PLANT ASSEMBLY

.1 Install circuit breakers in panelboards before shipment.

.2 In addition to CSA requirements manufacturer's nameplate must show fault current that panel including breakers has been built to withstand.

1.4 REFERENCES

.1 Canada Standards Association (CSA International).

.1 CSA C22.2 No.29-M1989 (R2000), Panelboards and enclosed Panelboards.

1.5 WASTE MANAGEMENT AND DISPOSAL

.1 Refer to Division 1.

1.6 ENVIRONMENTAL PROTECTION

.1 Refer to Division 1.

PART 2 Products

2.1 PANELBOARDS

.1 Panelboards: to CSA C22.2 No.29 and product of one manufacturer.

.2 Provide all switch/fuse type and breaker type distribution panelboards for use in the 600/347V 3PH 4W & 208/120 V, 3PH, 4-W systems. Mains size, switch and fuse sizes, breaker sizes, and number of branch units shall be as shown on the drawings and panel schedule.

.3 Provide CT's, meters and all required accessories for complete interconnection to the existing site power metering network. Allow for all cabling, software and reprogramming requirements for interconnection.

.4 Silver plated copper bus with full size 100% rated neutrals and equipped with pressure type solderless lugs. The copper shall be thoroughly cleaned and pre-plated before the final tin-plating is applied. All bus work shall be suitably supported to withstand a short circuit current of 35kA RMS amperes symmetrical or greater.

.5 Sequence phase bussing with odd numbered breakers on left and even on right, with each breaker identified by permanent number identification as to circuit number and phase.

.6 Panelboards: mains, main breaker, number of circuits, and number and size of branch circuit breakers as indicated.

.7 Complete circuit directory with typewritten legend showing location and load of each circuit for all new panelboards.

.8 Two keys for each panelboard and key panelboards alike.

.9 Mains: suitable for bolt-on breakers.

.10 All panelboards to have isolated neutral bus.

.11 All panelboards to be seismically rated for minimum of Zone 5 area.

.12 Sized for full width breakers.

.13 All surface mounted panels to be provided with drip-shield and rated for use in sprinklered building.

.14 Provide: sub-feed lugs, and interconnect wiring as required. Note that sub-feed wiring neutrals to be installed through common raceway as hot conductor sub-feed connections.

.15 Trim and door finish: baked grey enamel.

.16 Lockable door.

.17 All surface mounted panelboards to be mounted on 21 mm G1S painted plywood backboards. Paint to be fire retardant grey colour. Back boards to be provided by General Contractor; refer to section 06 01 11 "Rough Carpentry - Short Form" for further details. CSA Approved.

2.2 BREAKERS

.1 Breakers: to Section 26 28 21 – Moulded Case Circuit Breakers.

.2 Breakers with thermal magnetic tripping in panelboards except as indicated otherwise.

.3 GFEPD breakers for 30 mA equipment protection

.4 GFCI breakers for 5 mA personnel protection.

.5 Manufacturer's tie-locks for critical and code required systems:

1. Fire alarm
2. ULC approved communicators (and security equipment) used for fire alarm communication.

2.3 EQUIPMENT IDENTIFICATION

.1 Provide equipment identification in accordance with Section 26 05 00 – Common Work Results - Electrical.

.2 Provide nameplate for each panelboard, size 4 engraved as indicated. Confirm exact wording of nameplate prior to manufacture.

.3 Complete circuit directory with typewritten legend showing location and load of each circuit.

PART 3 Execution

3.1 INSTALLATION

.1 Locate panelboards as indicated and mount securely, plumb true and square, to adjoining surfaces.

.2 Install surface-mounted panelboards on plywood backboards. Where practical, group panelboards on common backboard. mount at height as indicated.

.3 Connect loads to circuits as indicated.

.4 Connect neutral conductors to common neutral bus with respective neutral identified.

.5 Coordinate with the General Contractor for the provision of continuous fire rated wall, ceiling and floor assemblies where panelboards are flush mount in fire separations and fire rated partitions.

.6 Install flush-mount panelboard in wall framing. Report to the General Contractor and to the Departmental Representative during rough-in where wall framing depth does not allow flush mount of electrical tub trim. General Contractor to

provide architectural trim around panel tub, increased depth of framed wall or other increased framing depth work to the approval of the Departmental Representative. Contractor to request written instructions from the Departmental Representative prior to implementation of trim or wall depth increase work

.7 All panelboard feeders to be continuous without splice.

.8 Provide Contractor testing as directed by the Departmental Representative. Insert test result data in O+M manuals.

END OF SECTION

PART 1 General

1.1 SUMMARY

.1 This Section includes Surge Protective Devices (SPD) or Transient Voltage Surge Suppressors (TVSS) for service entrance low-voltage power (347/600 Volts) equipment.

.2 Refer to drawings for general installation information. Follow manufacturer's recommendations for final installation requirements.

1.2 PRODUCT CERTIFICATION

.1 Signed by the surge protection manufacturer certifying that products furnished comply with the specified requirements

.2 Field Test Reports: Written reports of tests undertaken by the supplier to comply with all specified requirements

.3 Maintenance Data: Transient voltage suppression devices to include operation and maintenance instructions specified in Division 26.

.4 Warranties: minimum 2 years.

1.3 DESCRIPTION

.1 These specifications describe the electrical requirements for: Integrated Surge Protection Devices (SPD) for panelboards and switch boards for the:

.1 Main service panels.

1.4 QUALITY ASSURANCE

.1 Product must be made by a company engaged in the manufacture of such devices in the USA or Canada for a minimum of ten years

.2 Source Limitations: Obtain suppression devices from a single manufacturer.

.3 Product Options: specifications indicate system and electrical performance of suppressors and are based on the specific system indicated.

.4 Electrical Components, Devices and Accessories: TVSS compliance to: standards (UL 1449 2nd Edition, UL 1283, ANSI/IEEE C62.41, C62.45 and C62.11, NEMA LS 1-1992, MIL-STD-220AS, and CSA C22.2). All TVSS products to be have been independently tested to verify published surge current ratings. Listed and labelled as defined in NFPA 70, Article 100, by a testing agency acceptable to authorities having jurisdiction, and marked for intended use.

1.5 SCOPE OF WORK

.1 Provide a complete Surge Protective Devices (SPD) or Transient Voltage Surge Suppressors (TVSS) for service entrance low-voltage power (347/600 Volts) equipment for the main 600V CDP.

1.6 INSTALLATION

.1 Equipment to be installed as per code and manufacturers recommendations

.2 Surge protective devices to be electrically disconnected during all high potential or MEGGAR testing of conductors or power distribution equipment.

1.7 FIELD QUALITY CONTROL

.1 Testing: Perform the following field quality control testing:

- .1 Before electrical circuitry has been energized, test for compliance with all TVSS manufacturer's requirements.
- .2 Complete start-up checks and voltage verifications according to manufacturer's written instructions.
- .3 Perform visual and mechanical inspection on each unit. Certify with written report in O+M manuals that units are installed per manufacturer's recommendations.

.2 Repair or replace malfunctioning units. Retest after repairs or replacements are made.

1.8 AS-BUIT INFORMATION

.1 All surge protection system information shall be provided on the as-built drawings.

.2 Provide:

- .1 Equipment locations.
- .2 Equipment identification for reference to shop drawings.
- .3 Additional installation detail(s) as required to document the installation.

END OF SECTION

PART 1 General

1.1 SHOP DRAWINGS AND PRODUCT DATA

.1 Submit shop drawings and product data in accordance with Division 1.

1.2 WASTE MANAGEMENT AND DISPOSAL

.1 Refer to Division 1.

1.3 ENVIRONMENTAL PROTECTION

.1 Refer to Division 1.

PART 2 Products

2.1 SWITCHES

.1 20 A, 120 V, single pole, double pole, three-way, four-way switches to: CSA-C22.2, No.55 and CSA – C22.2, No.111.

.2 Manually-operated general purpose ac switches with following features:

- .1 Terminal holes approved for No. 10 AWG wire.
- .2 Silver alloy contacts.
- .3 Urea molded housing.
- .4 Suitable for back and side wiring.
- .5 White toggle.

.3 Toggle operated fully rated for fluorescent lamps, and up to 80% of rated capacity of motor loads.

2.2 RECEPTACLES

.1 Duplex receptacles, CSA type 5-15 R, 125 V, 15 A, U ground, with following features:

- .1 Urea molded housing.
- .2 Suitable for No. 10 AWG for back and side wiring.
- .3 Break-off links for use as split receptacles.
- .4 Eight back wired entrances, four side wiring screws.
- .5 Triple wipe contacts and riveted grounding contacts.
- .6 White color.

.2 Other receptacles with ampacity and voltage as indicated.

2.3 COVER PLATES

.1 Stainless steel cover plates for wiring devices.

.2 Sheet steel coverplates with turned over edges for surface mounted boxes.

2.4 INSTALLATION

.1 Switches:

.1 Install single pole throw switches with handle in “UP” position when switch closed.

.2 Install switches in gang type outlet box when more than one switch is required in one location.

.3 Mount toggle switches at height in accordance with Section 26 05 00 – Common Work Results – Electrical.

.2 Receptacles:

.1 Install receptacles in gang type outlet box when more than one receptacle is required in one location.

.2 Mount receptacles at height in accordance with Section 26 05 00 – Common Work Results - Electrical.

.3 Cover Plates:

.1 Protect stainless steel cover plate finish with paper or plastic film until painting and other work is finished.

.2 Install suitable common cover plates where wiring devices are grouped.

.3 Do not use cover plates meant for flush outlet boxes on surface-mounted boxes.

END OF SECTION

PART 1 General

1.1 RELATED WORK

.1 Section 26 05 00 – Common Work Results – Electrical.

.2 Section 26 24 17 – Panelboards – Breaker Type.

1.2 SHOP DRAWINGS AND PRODUCT DATA

.1 Submit shop drawings and product data in accordance with Division 1.

1.3 WASTE MANAGEMENT AND DISPOSAL

.1 Refer to Division 1.

1.4 ENVIRONMENTAL PROTECTION

.1 Refer to Division 1.

PART 2 Products

2.1 BREAKERS GENERAL

.1 Bolt-on moulded case circuit breaker, quick-make, quick-break type, for manual and automatic operation with temperature compensation for 40°C ambient.

.2 Common-trip breakers with single handle for multi-pole applications.

.3 Magnetic instantaneous trip elements in circuit breakers, to operate only when the value of current reaches setting.

.4 Circuit breaker interrupting capacity: 25 kA (symmetrical), or as indicated.

2.2 THERMAL MAGNETIC BREAKERS

.1 Moulded case circuit breaker to operate automatically by means of thermal and magnetic tripping devices to provide inverse time current tripping and instantaneous tripping for short circuit protection.

2.3 COUNTERFEIT CIRCUIT BREAKERS

.1 Counterfeit circuit breakers are defined to mean any circuit breaker not authorized by the panel manufacturer.

.2 Submit a letter from the manufacturers authorized technical representative that all breakers supplied within this project are not counterfeit and they are authorized by the panelboard manufacturer for use in each panelboard.

PART 3 Execution

3.1 INSTALLATION

.1 Install circuit breakers as indicated.

.2 Provide lamicoid nameplates as indicated.

END OF SECTION

PART 1 General

1.1 SHOP DRAWINGS AND PRODUCT DATA

.1 Submit shop drawings and product data in accordance with Division 1.

1.2 WASTE MANAGEMENT AND DISPOSAL

.1 Refer to Division 1.

1.3 ENVIRONMENTAL PROTECTION

.1 Refer to Division 1.

PART 2 Products

2.1 DISCONNECT SWITCHES

.1 Non-fusible and fusible disconnect switches in CSA Enclosure 1.

.2 Fuseholder assemblies to CSA C22.2 No. 39.

.3 Provision for padlocking in on and off switch positions by three locks.

.4 Fuses as indicated. Allow for Class J or L for general circuits. Class RK5 for motor or other high inrush current circuits.

.5 Fuseholders in each switch suitable without adaptors, for type of fuse as indicated.

.6 Mechanically interlocked door to prevent opening when handle in ON position.

.7 Quick-make, quick-break action.

.8 ON-OFF switch position indication on switch enclosure cover.

PART 3 Execution

3.1 INSTALLATION

.1 Install disconnect switches complete with fuses where indicated or required.

.2 Install size 2 lamicoid nameplate indicating system name, voltage and phase, or as indicated.

END OF SECTION

PART 1 General

1.1 RELATED WORK

.1 This Section of the Specification forms part of the Contract Documents and is to be read, interpreted and coordinated with all other parts.

.2 Motor starters, miscellaneous control devices.

1.2 RELATED SECTIONS

.1 Division 01 – Submittal Procedures.

.2 Division 01 – Health and Safety.

.3 Division 01 – Waste Management and Disposal.

.4 Division 01 – Closeout Submittals.

.5 Division 01 – Common Work.

1.3 REFERENCES

.1 CSA C22.1-15, except where specified otherwise.

1.4 SUBMITTALS

.1 Provide submittals in accordance with Division 01 - Submittal Procedures.

.2 Submit product data sheets for sills, bus bars, and compartments. Include product characteristics, physical size, and finish.

.3 Manufacturer's Instructions: provide to indicate special handling criteria, installation sequence and cleaning procedures.

.4 Submit shop drawings and indicate:

- .1 Outline dimensions.
- .2 Configuration of identified compartments.
- .3 Floor anchoring method and dimensioned foundation template.
- .4 Cable entry and exit locations.
- .5 Dimensioned position and size of bus bars and details of provision for future extension.
- .6 Schematic and wiring diagrams.

.5 Closeout Submittals: provide operation and maintenance data for motor control centre for incorporation into manual specified in Division 01 - Closeout Submittals.

.6 Include data for each type and style of starter.

1.5 WASTE MANAGEMENT AND DISPOSAL

.1 Separate waste materials in accordance with Division 01 - Waste Management and Disposal.

1.6 QUALITY ASSURANCE

.1 Health and Safety Requirements: do construction occupational health and safety in accordance with Division 01 - Health and Safety Requirements.

1.7 MAINTENANCE MATERIALS

.1 Provide maintenance materials in accordance with Section 26 05 00.

.2 Provide listed spare parts for each different size and type of starter:

- .1 (1) starter heater;
- .2 (1) control transformer;
- .3 (1) pilot lights;
- .4 (1) contacts, stationary;
- .5 (1) contacts, movable;
- .6 (1) contact, auxiliary;
- .7 (1) operating coil;
- .8 (1) fuses.

PART 2 Products

2.1 MOTOR STARTERS

.1 All motor starters supplied under Division 26 shall be of the same manufacturer.

.2 Motor starters are indicated on the mechanical drawings (where/if applicable) by letter types in conjunction with numerical suffixes. The letters indicate the type of starter and the numerals indicate special features which must be incorporated into or placed adjacent to the starters as specified.

.3 The following letter types shall apply:

- .1 Type A- Magnetic in general purpose enclosure;
- .2 Type B- Magnetic in Motor Control Centre, where/if applicable;
- .3 Type C- Manual starter in general purpose enclosure;
- .4 Type D- Manual open type flush mounted in switchbox and fitted with plate to match other switch plates in the area;
- .5 Type E- Manual with special features where applicable;
- .6 Type F- Combination breaker/magnetic starter in an NEMA I enclosure; Overcurrent device rating shall be as noted on Contract Documents. Overcurrent devices to be capable of being locked “OFF" and “ON”;
- .7 Type G- Combination un-fused switch/magnetic starter in an NEMA I enclosure;

.8 Type H- Fusible switch in Motor Control Centre, where/if applicable;

.9 Type R-2 (2SP) - Two-speed relay type starter w/o overload heaters. Locate in NEMA 1 enclosure.

.4 The following suffixes shall apply:

.1 Reset only in cover;

.2 Reset and HAND-OFF-AUTOMATIC or LOCAL-OFF-REMOTE switch in cover;

.3 Reset and START-STOP pushbuttons in cover;

.4 Run (red) and Stop (green) PUSH-TO-TEST pilot lights in cover;

.5 Fitted with special features, where/if applicable refer to mechanical drawings;

.6 Reset and ON-OFF selector switch in cover.

.5 All individual starters shall have RUN and STOP pilot lights, with PUSH-TO-TEST feature, and START/STOP pushbuttons or selector switches as required or indicated.

.6 Starters located in finished areas (other than service spaces) shall be of a flush-mounted type with stainless steel cover.

.7 Fit all motor starters supplied under Division 26 with adjustable electronic overload trips in all normally ungrounded lines.

.8 All magnetic starters, including combination starters provided under Division 26 shall be complete with 4 sets of spare auxiliary contacts (2 sets N/C, 2 sets N/O, all sets reversible). Each and every starter shall have a separate control transformer complete with fused secondary protection at 120 volt, 60 Hz AC. Transformer volt-ampere rating will be confirmed with Mechanical Division prior to ordering. Where line over current protection exceeds 15 amperes, provide primary fuses for the control transformers.

.9 Minimum magnetic starter size shall be NEMA Size 1.

.10 Coordinate with the BMS Controls Contractors. Interposing relays required to interface BMS system to the wiring in motor starters shall be provided by BMS Controls Contractor, where/if applicable.

.11 Provide interposing relays for fire alarm shutdown of motors, where/if applicable, refer to mechanical drawings.

2.2 MISCELLANEOUS CONTROL DEVICES

.1 Pushbuttons: Heavy Duty Oil-Tight.

.2 Selector Switches: Heavy Duty Oil-Tight.

.3 Indicating (Pilot) Lights: Transformer Base PUSH-TO-TEST Type, 12 volt LED indicator lamps. Coordinate the pilot light transformer and circuit voltages such that not more than 12 volts are available at the lamp terminals.

.4 Control Circuit Transformers: Confirm the volt-ampere rating of the control transformer with Mechanical Division prior to ordering.

2.3 EQUIPMENT IDENTIFICATION

.1 Provide equipment identification in accordance with Section 26 05 00.

.2 Manual starter designation label, white plate, black letters, Type B, engraved as indicated.

.3 Magnetic starter designation label, white plate, black letters, Type B, engraved as indicated.

PART 3 Execution

3.1 MOTOR STARTERS

.1 Install, and wire adjacent to the starters, all devices, equipment, and enclosures described in the Mechanical Equipment Schedule with applicable special letter types and suffixes.

.2 Furnish and install for every motor in the building, unless otherwise noted, either a manual or magnetic motor starter as indicated in the Motor Schedule.

.3 Check the actual nameplate current rating of all motors installed before ordering the electronic overloads for motor starters.

3.2 MOTOR CONTROL WIRING

.1 All motor control wiring (120V line voltage and 24V low voltage) including conduit as well as supply and installation of control devices will, except where specifically noted on the electrical drawings, in the Motor Schedule, or outlined below, be provided as described in Mechanical Division of the Specification. Except where specifically directed to the contrary, motor control wiring, associated conduits, and control devices do not form a part of Division 26 work.

.2 The motor control work which shall be provided under Division 26 shall include the following:

- .1 All conduit and control wiring specifically noted on the contract drawings and outlined in the different parts of the Specification;
- .2 All control wiring as specified on the mechanical drawings;
- .3 Control wiring related to air handling shutdown during fire alarm, where/if applicable.

3.3 MOTOR POWER WIRING

.1 Connect all motors shown on the drawings or mentioned in this Specification. The locations of motors are approximate only. Check to determine correct locations and install wiring to these points.

.2 Responsibility of Contractor to coordinate all mechanical requirements in accordance with the mechanical equipment schedule included with the mechanical contract documents.

.3 Check motor rotation before mechanically coupling to load.

.4 Except where otherwise directed, connect all motors with flexible conduits. Ground the conduit system with a separate grounding conductor installed in the flexible conduit.

3.4 STARTER VERIFICATION

.1 Field check motor starters supplied prior to commissioning equipment. As a minimum, verify the following:

- .1 Check of control circuits;
- .2 Verify that overload relay installed is correctly sized for motor used;
- .3 Record overload relay size and motor nameplate amperage;
- .4 Visual inspection of fuses and contactors;
- .5 Ensure all connections are tight.

.2 Measure and record motor amps, under load conditions and compare with full load amps and motor service factor. Report any excessive readings and unbalance. Measure voltage as close to motor terminals as possible while motor is running.

.3 Set all motor circuit protectors to the minimum level which will consistently allow the motor to start under normal starting conditions.

3.5 OVERLOAD RELAYS

.1 For starters provided, select overload relays in accordance with relay and motor manufacturers' recommendations, considering motor service factors, ambient temperature, temperature differences between motor and starter locations. Monitor motor operation during start-up to ensure motor operation is satisfactory and relays provide proper protection. For side inlet fans and other long acceleration time loads, provide special overload relays to suite the start-up condition. Provide manufacturers' curves and data sheets where necessary to provide supporting data for motor protection.

3.6 FIELD QUALITY CONTROL

.1 Operate switches, contactors to verify correct functioning.

.2 Perform starting and stopping sequences of contactors and relays.

.3 Check that sequence controls, interlocking with other separate related starters, equipment, control devices, operate as indicated.

END OF SECTION

PART 1 GENERAL

1.1 RELATED WORK

.1 This Section of the Specification forms part of the Contract Documents and is to be read, interpreted and coordinated with all other parts.

.2 Division 23/25: Fuel piping, final exhaust piping, room ventilation and sheet metal.

1.2 EQUIPMENT SCHEDULE

.1 Unless otherwise noted, values are based on equipment installed up to 150m altitude and operating in ambient temperatures up to 35C.

1.3 REFERENCES

.1 US EPA Tier 2 non-road stationary diesel engine emission control requirements.

.2 CSA International

.1 CSA-B139- 09, Installation Code for Oil Burning Equipment.

.2 CAN ICSA-C282, Emergency Electrical Power Supply for Buildings

.3 International Organization for Standardization (ISO)

.1 ISO 3046-1-2002, Reciprocating internal combustion engines - Performance - Part I: Declarations of power, fuel and lubricating oil consumptions, and test methods - Additional requirements for engines for general use.

.2 ISO 3046-4-1997, Reciprocating internal combustion engines - Performance - Part 4: Speed governing.

.4 National Electrical Manufacturers Association (NEMA)

.1 NEMA MG1-2006(R2007), Motors and Generators.

.5 National Electrical Contractors Association

.1 NECA 404, Standard for Installing Generator Sets.

1.4 SUSTAINABLE REQUIREMENTS

.1 Materials and products in accordance with Division 01 Sustainable Requirements: Construction.

.2 Do verification requirements in accordance with Division 01 Sustainable Requirements: Contractor's Verification.

1.5 WASTE MANAGEMENT AND DISPOSAL

.1 Separate and recycle waste materials in accordance with Division 01 - Construction/Demolition Waste Management And Disposal and with the Waste Reduction Workplan.

.2 Avoid using landfill waste disposal procedures when recycling facilities are available.

.3 Place materials defined as hazardous or toxic waste in designated containers.

1.6 REGULATORY REQUIREMENTS

.1 Generator set and auxiliaries shall comply with CSA Standard C282 - (latest adopted edition) as well as the following specification.

.2 Where this specification calls for performance in excess of CSA Standards - (latest adopted edition), this specification shall govern.

1.7 SYSTEM DESCRIPTION

.1 The generator system shall consists of:

- .1 Prime mover engine.
- .2 Alternator.
- .3 Generator control panel.
- .4 Smart monitoring interface to Building Management System.
- .5 Muffler and flexible connections.
- .6 Cooling system.
- .7 Equipment mounted load bank.
- .8 Day tank(s)
- .9 Fuel pumps.
- .10 Battery charger and battery.
- .11 Interconnecting wiring.
- .12 Structural steel base.
- .13 Automatic transfer switch.
- .14 Weatherproof, sound attenuated enclosure.

.2 Set designed to operate as emergency standby power source. Set shall be a packaged unit, complete and mounted on a skid.

.3 Control panel to:

- .1 Monitor operation of generator.
- .2 Annunciate trouble.
- .3 Sound alarms.

1.8 ASSOCIATED WORK INCLUDED

.1 Concrete pad preparation.

.2 Installation of anchor devices and setting templates.

.3 Cooling/Exhaust piping.

.4 Ventilation system.

.5 Fuel supply

.6 Main fuel storage tank.

.7 Fuel transfer pumps.

.8 Temporary Generator Power.

1.9 STANDARD OF ACCEPTANCE

.1 The generator and automatic transfer switch are owner supplied. Refer to Appendix ‘A’.

.2 All products included must be capable of being verified as a complete system under full warranty by the contractor.

.3 Supply and install a complete system as the scope of this section.

1.10 SHOP DRAWINGS AND PRODUCT DATA

.1 Submit shop drawings and product data in accordance with Section 26 05 00.and as outlined herein. All shop drawings items to be within one complete submission.

.2 Shop drawings to include a complete material list with manufacturer, style, model number and quantity.

.3 Shop drawings to include manufacturer's specification sheets with photographic depiction of all system components. Specification and descriptive data to include dimension, weight, appearance, connection provisions, materials, metal gauges and operating specification, characteristics, features and controls.

.4 Provide device samples when requested by the Consultant.

1.11 OPERATION AND MAINTENANCE DATA

.1 Provide data for incorporation into maintenance manual specified in Section 26 05 00 and Division 01. Provide four sets.

.2 Operation and Maintenance Manual to include instructions for particular unit supplied and not general description of units manufactured by supplier and:

.3 Operation and maintenance instructions for engine, alternator, battery charger, battery, fuel system, engine room ventilation system, cooling system, exhaust system and accessories, to permit effective operation, maintenance and repair.

.4 Technical data:

.1 Illustrated parts lists with parts catalogue numbers.

.2 Schematic diagram of electrical controls.

.3 Flow diagrams for:

.1 Fuel system.

.2 Lubricating oil.

.3 Cooling/exhaust system.

.4 Certified copy of factory test results.

1.12 MAINTENANCE MATERIALS

.1 Provide maintenance materials in accordance with Section 26 05 00.

.2 Include:

.1 6 fuel filter replacement elements.

.2 6 lube oil filter replacement elements.

.3 6 air cleaner filter elements.

.4 2 sets of fuses for control panel.

.5 Special tools for unit servicing.

.6 2 sets of approved headphone style ear protectors.

1.13 FACTORY TEST

.1 Supplier shall conduct performance and load tests in the factory upon completion of assembly at factory and prior to shipping.

.2 Factory full load test to be a minimum of four hours with all test results logged at a maximum of half hour intervals.

.3 Test data to include all items listed below in the “Site Acceptance Test”.

.4 Notify consultant at least two weeks before the scheduled factory test.

.5 Copies of certified test results shall be submitted upon completion of factory test procedure.

1.14 ACCEPTANCE TEST (FINAL ON-SITE TESTING)

.1 A satisfactory acceptance test shall be conducted after preliminary runs and tests have been made. This test shall be conducted on site after completion of installation. This acceptance test shall not be of less than four hours duration with full rated load on unit. Engine Manufacturer shall provide a 100% portable load bank of full rated load. After completion of above test, tests shall be performed to demonstrate overheat protection, low oil pressure protection and

overspeed protection. Miscellaneous valves and piping required to demonstrate functioning of safety devices shall be provided.

.2 The following data shall be taken at the start of the test and at half hour intervals thereafter:

.1 Frequency.
.2 Voltage.
.3 Load (amperes).
.4 Kilowatts.
.5 Water temperatures (inlet and outlet).
.6 Lubricating oil temperature.
.7 Lubricating oil pressure.
.8 Exhaust temperatures before turbo charger.
.9 Ambient temperature.

.3 On completion of the site acceptance test the supplier shall perform the following tests and demonstrate the satisfactory operation of the following control devices:

.1 High water temp. switch.
.2 Low oil pressure switch.
.3 Overcranking switch.
.4 Overspeed switch.
.5 Low water level.
.6 Low fuel supply level (main tank and day tank).
.7 Low battery voltage level.
.8 Provide alignment of any flexible couplings.

.4 Note: Before connection to building electrical system phase rotation shall be checked for compatibility.

.5 Fuel required for performing diesel-generator acceptance test shall be provided by the engine manufacturer.

.6 A competent Diesel-generator expert shall be provided for one working day, at a time convenient to Owners, to instruct Owner's staff in maintenance and operation.

1.15 GUARANTEE

.1 Provide a written guarantee, signed and issued stating that the generator installation and contractor provided equipment is guaranteed against defects in material and workmanship for a period of 1 year, from the date of the Substantial Performance. Only Generator and Automatic Transfer Switch guarantee are provided by the owner.

PART 2 PRODUCTS

2.1 ACCEPTABLE GENERATOR SUPPLIERS

.1 Generator is supplied by owner. Refer to Appendix 'A'.

2.2 LOAD BANK

.1 Provide tap point for a portable electrical resistive load bank.

.2 Provide a fixed electrical resistive load bank down stream of the generator set radiator.

.3 Load bank to be complete with all wiring, connections, mounting hardware and flanges to suit the cooling system and should be coordinated with the capacity and design of the engine radiator cooling fan and system.

.4 Provide a separate breaker and step controls mounted on the generator package.

2.3 COOLING COMPONENTS

.1 Engine: radiator liquid cooling system complete with horizontal pusher type fan maintaining safe operating temperature for unit under full load conditions in 30 degrees Celsius ambient.

.2 Coolant: glycol base anti-freeze good to minus 10 degrees Celsius.

.3 Coolant Level: provide low level sensor on radiator with contact wired back to engine/generator control panel and engine trouble common alarm relay.

.4 Provide flexible connection to radiator.

.5 Provide 50 mm [2"] diameter minimum sight glass on radiator to give indication of coolant level.

.6 Radiator frame to be flanged to accept canvas ducting.

.7 Radiator fan to have safety guard around propeller and drive shaft.

2.4 EXHAUST COMPONENTS

.1 Silencer and piping: provide single silencer system, completely sealed, metal primed finish with high temperature paint, insulated for noise and heat radiation. Silencer to be supplied by emergency generator manufacturer and meet the following noise level criteria. Provide an exhaust system generating a discharge noise level not exceeding 90 dBA + 10 log at (rated KVA) at a distance of 1 m from the exhaust termination at a point perpendicular to the axis of the exhaust. Exhaust noise will be measured in general accordance with CSA Standard Z107-

22 with the engine running normally. The 90 dBA criterion includes reflections from existing adjacent building surfaces.

.2 Silencer shall meet or exceed EPA Tier 3 emissions exhaust standards.

2.5 STARTING SYSTEM COMPONENTS

.1 Battery Bank: DC, lead acid type, 10-year life or 200 total discharges, sized for four consecutive starts without additional charging and shall not impede control voltage even after fourth starting attempt. Cells to be grouped on a rigid steel battery rack within a ventilated battery cabinet. Rack to be protected with wood or plastic paint from acid corrosion. Provide battery cover as per “Work Safe” requirements.

.2 Battery Charger: constant potential type with manual and automatic control, automatic equalize with adjustable timer mounted on wall adjacent to unit complete with DC ammeter, voltmeter, overload protection, AC input switch, pilot light for AC "on", equalizing charge and high rate charge. System to be complete with low and high battery alarm, AC failure, inverter failure, common alarm output contact, all wired to engine control panel for charger failure alarm. Unit to be capable of full charging discharged battery in period not exceeding 24 hours.

.3 Provide hydrometer, thermometer, protective apron, goggles, and gloves all within wall mounted lockable metal cabinet at unit location. Cabinet shall be finished light grey.

2.6 ALARM AND ANNUNCIATOR SYSTEMS

.1 Provide a local audible and visual alarm in accordance with Section 46 of the Canadian Electrical Code and electrical inspection authority and as indicated in this section.

.2 Provide dry contacts clearly identified for the ‘”**Building Fire Alarm Supervision**” as per CAN/ULC S524 which requires “a common fault indication from an engine driven generator that is associated with the Fire Alarm”.

.3 Provide code gauge metal enclosure complete with hinged cover on unit frame mounted above generator to house engine and generator controls or as indicated.

.4 Annuniciator to be a latching type with manual reset button for DC operation from battery bank incorporating contacts for remote annunciator indication and auxiliary contacts for connection to Building Management System. All alarms to be silenced by acknowledge button. All subsequent alarms to sound alarm horn. Annunciator to stay illuminated until fault is cleared and reset button depressed.

.5 Minimum requirements:

.1 Designed for use in harsh environments

.2 Audible alarm horn rated at 80 db

.3 Surface or flush mounting

.4 Lamp test and alarm silence switches
.5 Alarms
.6 Switch not in auto
.7 Low coolant level
.8 High coolant temperature
.9 Low oil pressure
.10 Over-crank
.11 Over-speed
.12 Emergency stop
.13 Fuel Leak
.14 Battery over-voltage
.15 Weak battery or Battery failure

2.7 REMOTE ANNUNCIATOR

.1 Provide a remote LED annunciator in a supervised location or as indicated. Flush or surface mount to suit location. Audible beeper horn with silence button for run and trouble situations. Typical 100x100 [4”x4”] standard box mounting.

.2 Remote annunciator to indicate:
.1 Generator Normal
.2 Generator Run
.3 Generator Trouble.

2.8 ENGINE/GENERATOR CONTROL PANEL

.1 Engine Controls: Provide oil pressure gauge, oil temperature gauge, water temperature gauge, RPM meter, low oil pressure alarm contacts, high water temperature alarm contacts, low oil pressure shutdown contacts, high water temperature shutdown contacts, overspeed shutdown contacts, cranking limiter relay and shutdown, engine-run relay, engine-trouble relay and fail-to-start relay. Provide 4 spare normally open contacts on engine run relay and 2 spare contacts for engine trouble and fail to start relays all wired to terminal blocks in panel for remote connection.

.2 Generator Controls: Provide voltmeter, frequency meter, scale type (not reed type), voltage adjustment rheostat locking potentiometer type (plus or minus five % adjustment), speed/frequency adjust rheostat, running time meter, regulator isolation switch. Provide 4-position switch and 600/120 volt control power transformers for voltmeter. Voltmeter is to have 150 volt AC coil with 0-750 volt scale or to suit equipment. Provide 4-position switch and quantity 3 - 1000/5A current transformers for ammeter. Ammeter is to have 5 Amp coil with analog and digital readout, Crompton 007-DIBA series or equivalent.

.3 Provide vibration isolation for engine generator control panel where mounted on unit.

.4 Provide clips over all auxiliary relays to secure mounting.

2.9 ENGINE ALARM PANEL

.1 Incorporate in engine/generator control panel, generator Off/Start/Auto selector switch key operated, key removable in auto position, timing relays, trouble horn, acknowledge and reset switches and pilot light illuminated annunciators with engraved faceplates reading:

.2 Two (2) spare alarm points.

.3 Fail to start alarm.

.4 Low glycol level alarm.

.5 Low oil pressure alarm.

.6 Low oil pressure shut down.

.7 Low coolant temperature.

.8 Low fuel alarm. (Day Tank Only)

.9 High water temperature alarm.

.10 High water temperature shut down.

.11 Overspeed shut down.

.12 Over cranking shut down.

.13 Battery charger trouble.

.14 Provide 2 spare common alarm contacts wired to terminal blocks for remote tie-in to Building Automation System.

.15 Provide lamp test button. Alarm lights to be yellow, shutdown lights to be red. Lights shall be LED type.

2.10 GENERATOR BREAKER

.1 Moulded case solid state trip breaker.

.2 Adjustable trip functions: long time delay, instantaneous, short time pick up, short time delay , and short time I2t pickup.

.3 Auxiliary switch contact.

.4 Approved Manufacturer:Siemens SND6 series, FPE CK series, Cutler Hammer RD series

2.11 NAMEPLATES – ENGINE / GENERATOR PANEL

.1 All engine mounted nameplates shall be aluminium or brass and attached with mechanical fasteners.

.2 Provide nameplates for all relays, lights, switches, engine sensors, meters, gauges, current transformers, potential transformers, fuses, potentiometers.

2.12 AUTOMATIC TRANSFER EQUIPMENT

.1 Automatic transfer switch is owner supplied. Refer to Appendix 'A'.

2.13 GENERATOR WEATHERPROOF OUTDOOR ENCLOSURE

.1 The generator set outdoor enclosure is owner supplied. Refer to Appendix 'A'.

PART 3 EXECUTION

3.1 STARTING SYSTEM OPERATION

.1 Stop/Start Sequence: in automatic position, auxiliary contacts in transfer switch initiates starting cycle of unit. Cranking limiter relay to limit cycle to 75 seconds after which if engine fails to start, trouble circuit contacts close, illuminating appropriate trouble annunciator window and locking out starting cycle until manually reset. Cranking circuit shall permit three 15 second crank attempts with 10 second rest between each crank. On starting of engine, starting circuits automatically reset. On resumption of normal power after time delay in transfer switch, load to retransfer to normal supply and following rundown period engine shall shut down and return to starting condition.

.2 Battery charger to be mounted on wall adjacent to unit. Provide all interconnecting conduit and wiring from charger to batteries and batteries to engine starting and generator system.

.3 Connect charger to nearest 120 volt AC emergency panel. Provide conduit, wire and breakers as required.

3.2 AUTOMATIC TRANSFER SWITCH OPERATION

.1 Automatic startup upon normal power failure. All transfer switches, the control circuits of which shall be connected in parallel such that any switch can initiate stop/start sequence

.2 Transfer when standby unit reaches 90 percent of rated voltage.

.3 Retransfer to normal supply after time delay, when normal power is resumed and between 90 and 100 % of nominal.

.4 Engine rundown period at "No Load".

.5 Engine shutdown.

.6 Operating sequence automatically reset.

.7 Remote testing capability.

.8 Presignal to elevator controller prior to operation of transfer switch in either direction.

.9 Provision for integrity of power on normal, emergency and load bussing for tie-in to Building Management System.

3.3 GENERAL GENERATOR EQUIPMENT INSTALLATION

.1 Locate generating unit and install in location as indicated.

.2 Complete wiring and interconnections.

.3 Start generating sets and test to ensure correct performance of components.

.4 All conduit or pipe connections to engine-generator shall have a flexible section to allow for vibration and noise transmission dampening.

.5 Suitably protect all hot spots and moving parts to prevent accidental contact by personnel. Provide conspicuous sign, warning personnel that engine may start automatically at any time.

.6 Connect all controls.

.7 Demonstrate that new generator trouble is annunciated at the annunciator panel.

.8 Perform tests in accordance with PART 1.

.9 Notify Consultant 10 working days in advance of test date.

3.4 CLOSEOUT ACTIVITIES

.1 Do closeout activities in accordance with Division 01 and Section 26 05 00.

.2 Carry out demonstrations and training of complete system.

.3 Provide familiarization training of operating and maintenance staff.

.4 Provide these services for such period, and for as many visits as necessary to put equipment in operation, and ensure that operating personnel are conversant with aspects of its care and operation.

.5 Provide fuel required for performing site test and top-up after acceptance test completion.

3.5 MAINTENANCE – CLEARANCES

.1 Provide clearance around systems, equipment and components for observation of operation, inspection, servicing, maintenance and as recommended by manufacturer and CSA-B139.

END OF SECTION

PART 1 General

1.1 RELATED WORK

.1 Refer to Section 26 05 00 – Common Work Results.

.2 Refer to Section 26 24 17 – Panel Boards – Breaker Type.

.3 Refer to Section 26 28 21 – Moulded Case Circuit Breakers

.4 Refer to Section 26 12 16 – Dry Type Transformers up to 600 V Primary.

1.2 DESCRIPTION

.1 This section describes the requirements for furnishing a protective device coordination study for power distribution gear.

.2 Include in the quotation all costs for preparation of a complete System Coordination Study in accordance with the IEEE Standard 242, 'Recommended Practice for Protection and Coordination of Industrial and Commercial Power Systems', the IEEE Standard 1584-2002, 'IEEE Guide for Performing Arc-Flash Hazard Calculations', and CSA Z462-2015, 'Workplace Electrical Safety'.

.3 The study shall be prepared by an Engineering or Technical Service firm that regularly performs these types of power systems studies and analysis. The study shall be performed or reviewed and sealed by a licensed Professional Engineer, registered to practice in the Province of British Columbia.

PART 2 Products – not used

PART 3 Execution

3.1 STUDIES

.1 The coordination study shall include all relevant distribution and protective devices within the following scope:

.1 'Upstream' devices to the utility level, including the curves of the utility transformer's protective device; or, where no such device exists, the next upstream device in the Utility's system; this includes the main emergency breaker, generator breaker and main breaker in workshops building.

.2 The transformer damage curve, in order that a complete coordination of the system is accomplished;

.3 'Downstream' devices to include the DCP main breaker, pump breakers for each 600V motor larger than 10 HP (including motor curves).

.2 A short circuit study shall be performed for the following busses within the following scope:

.1 Main utility transformer secondary terminals;
.2 Existing CDP's bus
.3 Generator feed bus and ATS
.4 New CDP bus
.5 Motor terminals and;
.6 New panelboards feeders

.3 An arc flash study shall be performed for the following busses and with the following scope:
.1 Same equipment busses as short circuit study, plus the line side of the all CDP's main overcurrent protection device (main breaker's up the stream);
.2 The arc flash study shall include production of detailed arc flash warning labels for each equipment bus, these labels are to be prepared as detailed in CSA Z462 Annex Q.4;
.3 The labels produced shall be prepared for the 'worst-case' arc flash hazard likely to occur in the facility;
.4 The study provider shall examine arc flash hazard when the facility is running on utility and stand-by generator power, and with and without the pumps running. The scenario which yields the highest incident energy shall be used as the basis for producing the equipment labels;
.5 All scenarios shall be run with As-Built breaker setting and feeder information entered into study model.

.4 The work of the aforementioned studies shall include:
.1 Liaison with the local utility for information on primary fuse and other protective devices, transformer data and system and substation capacities which affect the coordination of this system for both primary and any stand-by feeders;
.2 Liaison with distribution equipment and switchgear manufacturer to obtain actual trip curves of proposed protective devices for the new equipment;
.3 Recommendations shall be included, listing all deficiencies within the scope of the study and proposing methods of correction for each deficiency;
.4 Short circuit study shall be produced based on the highest available fault current available from the utility provider;
.5 Arc flash study shall be produced based on the actual (present-day) fault current available from the utility provider and operating on standby generator with and without motors running; the worst-case results from these operating scenarios shall be used to produce equipment arc flash labels.

.5 The coordination study report shall include the following:
.1 Each time-current graph shall be printed in colour. The selected colours or hatching pattern will allow the end-user to easily discriminate between different device curves, especially on complicated graphs where devices overlap.

.2 The time-current curves shall be drawn on special log graphs with time coordinate range of 0.01 to 1,000 seconds and current coordinate ranges of 4 orders. The entire distribution system shall be subdivided into portions so that the curve for each device clearly shows its relationship to associated upstream and downstream devices. The coordination study should separate the emergency power from the normal power distributions. Each graph for a portion of the system shall include/ indicate the following:

.1 The portion of the distribution system represented by the devices on the graph shall be represented by a single-line diagram, drawn in the corner of the time-current coordination graph.

.2 Each device curve shall end at the 3 phase symmetrical fault level calculated for that bus, based on the results of the short circuit study.

.3 Cable, bus, or conductor damage curves shall be shown where appropriate. All transformer inrush, damage and overload curves shall be shown.

.4 Motor starting curves and protective devices shall be shown for all motors larger than 10 HP within the scope of the study.

.5 Include ground fault protection coordination within the scope of the study.

.3 On the graphs, or on the same page as the graph, all protective device curves within the scope of the graph shall be shown with the following information:

.1 Relay curves with text indicating, Manufacturer, Type, Current Transformer size, Tap or Pickup setting, Time Dial settings, and curve type;

.2 Fuse curves with average melting curve for low voltage fuses and minimum melt and total clearing for high voltage fuses with text indicating, Manufacturer, Type, Ampacity, Voltage, and Speed;

.3 Static-Trip breaker curves with text indicating; Breaker and Trip Unit Manufacturer and type, Current Transformer and Sensor Type, and all trip unit settings.

.4 Thermal-Magnetic Breaker curves with text indicating, Breaker type, Trip rating, and instantaneous trip settings.

.6 Include tables within the study that clearly list all protective devices within the scope of the study and all associated information. These tables are to be based on settings established and noted in the coordination curves. The tables shall be logically arranged and grouped to effectively present the following information:

.1 Relays, including Manufacturer, type, curve, CT, and all protective settings;

.2 Transformers, including size, type, configuration, voltage, and impedance;

.3 Fuses, including Manufacturer, type, ampacity, voltage, speed;

.4 Static Trip Units, including Manufacturer, type, CT, sensor or plug, all protective settings;

.5 Thermal-Magnetic Trip Units, including Manufacturer, rating, and instantaneous setting;

.6 Motor Protectors (overloads), include Manufacturer, type, rating, all protective settings;

.7 All protective devices shall be listed with clear descriptive text to identify their place within the distribution system;

.8 All protective devices shall have a reference to the time-current graph where they are shown;

.9 The tables shall list all recommended settings of all protective devices within the scope of the study. This will allow the end-user to identify and plan for required changes to protective device settings, and to determine which settings have been implemented within this contract.

.7 The work of the short circuit study shall include:

.1 Evaluation and documentation of three phase and single-line-to-ground short circuit fault levels at all evaluated distribution busses, motor control centre and panel board locations within the scope listed above;

.2 The output of the short circuit study shall be a printed tabulation of asymmetrical and symmetrical RMS short circuit current values, including X/R ratios;

.3 All significant sources and impedances shall be evaluated, including but not limited to, power utility and Stand-by emergency sources, motors, cables, transformers, reactors, and any other devices impacting upon the available short circuit.

.8 The device evaluation study shall include:

.1 All pertinent interrupting devices within the scope of the job shall be listed with its interrupting rating or its series interrupting rating as applicable;

.2 All devices upstream the new main breaker feeding this building (main emergency CDP power, main breaker feeding the emergency CDP, Generator bus and ATS and utility transformers.

.3 A cross reference in table form shall be provided whether the protective devices at each bus are appropriate for the available fault current at each bus.

.9 The arc flash study shall include:

.1 For all busses within the scope, bus separation distances and enclosure dimensions must be gathered, arc flash currents derived, and current interruption times defined;

.2 A cross reference in table form shall be provided for the arc flash currents, incident fault energies, flash protection boundaries, and protection classification;

.3 Adhesive labels shall be produced and affixed to all electrical equipment as previously noted;

.4 An electronic PDF document of the field markings for all switchgear within the scope of the arc flash study will be issued electronically, as well as an MS Excel ® file containing all data submitted within the PDF document. This will allow the Departmental Representative to have spare or replacement adhesive warning signs printed and attached on all

equipment, as per the CEC 2015, CSA Z462-2015 and ANSI Z535.4-2002 'Product Safety Signs and Labels'.

.10 A final Engineering report shall be completed including all graphs, tables, findings, and recommendations listed above. Provide one copy in colour in electronic format (pdf file). Also included shall be the following items:

- .1 Review the ground fault protection to ensure proper ground fault protection of the system.
- .2 Review the application of protective devices and CT configurations and list omissions in proper protection of electrical apparatus.
- .3 A clear and concise listing of deficiencies found upon completion of the protection and coordination studies.
- .4 For each deficiency, an associated recommended solution, including an 'Order of Magnitude' budget pricing (not including design and/ or drawings).

.11 Submission for the Departmental Representative approval will verify the ratings and settings of all protective devices. Approval will not eliminate the responsibility of Division 26 to provide proper coordination of the breaker and relay settings for all equipment supplied.

.12 A preliminary report shall be prepared and submitted to the Departmental Representative for review, as part of the shop drawing submittal process provided for the service entrance equipment. This initial report shall include all proposed equipment characteristics, protection devices, etc., and shall use estimated feeder lengths.

.13 The preliminary report shall be updated at the end of construction to account for any and all changes made during the course of the project. Feeder lengths, equipment modifications, actual overcurrent protective device settings, etc., shall be incorporated into the final report.

.14 Delivery of the final report shall be made a minimum of four (4) weeks prior to request for substantial completion. After review and comment by the Departmental Representative, the Contractor shall furnish the arc flash labels and affix to the equipment, prior to final inspection.

.15 Prior to final inspection, the Contractor shall arrange for the distribution equipment, Manufacturer's Representative to visit site to check all settings and ensure they are in accordance with coordination study results/ values.

END OF SECTION

PART 1 General

1.1 RELATED SECTIONS

.1 Mechanical: Divisions 23 and 25

1.2 REQUIREMENTS

.1 Provide a complete system of wiring to motors and other mechanical equipment as specified herein and as shown on the drawings.

.2 Unless specifically noted otherwise, wire and leave in operation all electrically operated equipment supplied under this contract or relocated or re-wired as part of the scope. Examine the drawings and shop drawings of all Divisions for the extent of electrically operated equipment supplied under other divisions.

.3 Unless specifically noted otherwise, supply all disconnects, relays, starters, etc., necessary of the operation of equipment. Check all starters, relay coils and thermal elements to ensure that they provide the necessary protection for motors and other equipment.

.4 Do not operate mechanical equipment unless approval is obtained from the trade providing the equipment.

.5 Examine drawings and shop drawings of other Divisions to obtain exact location of mechanical equipment shown on the drawings. Where necessary, obtain information for conduit locations from other trades' drawings and shop drawings.

.6 Assist in placing in operation all mechanical equipment having electrical connections.

.7 Provide single or three phase starters with fused 120V control transformers and overload relays where indicated.

.8 Provide all power wiring for all motors.

.9 Provide power wiring for heating ventilating and air conditioning equipment. Provide terminations in starters and MCC for control wiring so that starter control circuits may be extended. Where 120V power is required for any mechanical equipment, wiring to equipment terminal is the work of this Division.

.10 Refer to Mechanical Equipment Schedule on the drawings for more details.

.11 Mechanical equipment control work which shall be provided under Division 26 shall include the following:

.1 All conduit and 120V control wiring and any other control wiring specifically noted on the drawings or outlined in the different parts of the Specifications.

.2 Conduit and 120V control wiring for baseboard heaters, unit heaters and force flow heater thermostats.

.3 All control wiring as specified in the Mechanical Equipment Schedule.

.4 Where applicable, control wiring related to shut down on any mechanical equipment during fire alarm.

PART 2 Products

2.1 3-PHASE DISCONNECT SWITCHES to 600V

.1 Industrial type 'A', having quick make, quick break visible blade mechanism, cover interlocks and padlocking switch in the closed or open position. Use EEMAC 4 enclosures outdoors, and EEMAC 1 indoors, switches to be H rated, heavy duty type.

2.2 120V, 1-PHASE DISCONNECT SWITCHES

.1 Manual disconnect switch hp rated without overload relay.

2.3 208V, 1-PHASE DISCONNECT SWITCHES

.1 Manual disconnect switch hp rated without overload relay -2 poles.

PART 3 Execution

3.1 INSTALLATION

.1 Provide disconnect switches adjacent to all equipment unless the specifically noted otherwise.

.2 Provide automatic starters complete with magnetic contactor for equipment shutdown by the fire alarm systems when activated as indicated on the drawings and described here in.

.3 Provide all wiring between all force flow and unit heaters and their thermostats if the T-stats are 120V. Install wiring between all mechanical components to provide a functional system.

.4 Do control wiring as indicated on the drawings and the Mechanical Equipment Schedule.

END OF SECTION

PART 1 General

1.1 RELATED WORK

.1 This Section of the Specification forms part of the Contract Documents and is to be read, interpreted and coordinated with all other parts.

1.2 REFERENCES

.1 CAN/ULC-S524, Standard for the Installation of Fire Alarm Systems

.2 CAN/ULC-S525, Audible Signal Device for Fire Alarm Systems

.3 CAN/ULC-S526, Visual Signal Devices for Fire Alarm Systems

.4 CAN/ULC-S527, Control Units

.5 CAN/ULC-S528, Manual Pull Station for Fire Alarm Systems

.6 CAN/ULC-S529, Smoke Detectors for Fire Alarm Systems

.7 CAN/ULC-S530, Heat Actuated Fire Detectors for Fire Alarm Systems

.8 CAN/ULC-S531, Standard for Smoke Alarms

.9 CAN/ULC-S536, Inspection and Testing of Fire Alarm Systems

.10 CAN/ULC-S537, Verification of Fire Alarm Systems

.11 NBCC- National Building Code of Canada

.12 NFCC- National Fire Code of Canada

.13 TB OSH – Treasury Board of Canada, Occupational Safety and Health Manual – Chapter 3-03, Standard for Fire Protection Electronic Data Processing Equipment.

.14 TB OSH – Treasury Board of Canada, Occupational Safety and Health Manual – Chapter 3-04, Standard for Fire Alarm Systems.

.15 All references to the latest edition of these standards.

.16 Where the standards listed above reference other standards, those requirements shall also apply.

1.3 SYSTEM DESCRIPTION

.1 Fully supervised, class ‘A’, microprocessor-based, fire alarm system, utilizing digital techniques for data control and digital, and multiplexing techniques for data transmission.

.2 System to carry out fire alarm and protection functions; including receiving alarm signals; initiating single-stage alarm; supervising components and wiring; actuating annunciators and auxiliary functions; initiating trouble signals and signaling to a ULC approved monitoring agency.

.3 The new system shall be integrated with the existing central fire alarm panel on site (in the gatehouse office). Allow for all wiring and programming/re-programming and updating the zone maps and zone indications in the bid price for a complete and operation system.

.4 Zoned, coded, single stage.

.5 Modular in design to allow for future expansion.

.6 Operation of system shall not require personnel with special computer skills.

.7 System to include:

.1 Central Control Unit in separate enclosure with power supply, stand-by batteries, central processor with microprocessor and logic interface, main system memory, input-output interfaces for alarm receiving, annunciation/display, and program control/signalling.

.2 All panel modules and add-on cards, connections, software and programming as required. Provide 25% spare capacity in control panel cabinet for future cards/modules.

.3 Power supplies.

.4 Initiating/input circuits.

.5 Output circuits.

.6 Auxiliary circuits.

.7 Wiring.

.8 Manual and automatic initiating devices.

.9 Ancillary devices.

.10 Spare relay outputs to initiate device shutdown on alarm.

.11 Audible and visual signalling devices.

.12 End-of-line devices.

.13 Annunciators.

.14 Event log memory chip.

.15 Historic event recorder.

.16 Autodialer

.8 New Fire Alarm central control units to be integrated to the existing site system fire alarm panel in room 008 in building 103. Provide required software and hardware at the new buildings as well as at the existing central control for a fully functional system.

1.4 REQUIREMENTS OF REGULATORY AGENCIES

.1 System:

.1 To TB OSH Chapter 3-04.

.2 Subject to Fire Commissioner of Canada (FC) approval.

.3 Subject to FC inspection for final acceptance.

.2 System components: listed by ULC and comply with applicable provisions of National Building Code, and meet requirements of local authority having jurisdiction.

1.5 SHOP DRAWINGS

.1 Submit shop drawings in accordance with the requirements of this section, Section 26 05 00.

.2 Include:

.1 Overall system riser identifying control equipment, initiating zones, signaling circuits; devices and end-of-line devices (as applicable).

.2 Details for all products and devices used to produce a working system. Include all initiating and annunciating devices, end-of-line devices, panels, ancillary devices, and other devices required to produce a complete working fire alarm system.

.1 Identify all options and features that will be present with equipment as installed, including but not limited to: operating ranges, colors, voltage, phase, dimensions, enclosure ratings, materials or protective features.

.3 Step-by-step operating sequence, (cross-referenced to logic flow diagram if required for clarification).

1.6 CLOSEOUT SUBMITTALS

.1 Provide operation and maintenance data for fire alarm system for incorporation into manual specified in Division - Closeout Submittals.

.2 Include:

.1 Instructions for complete fire alarm system to permit effective operation and maintenance.

.2 Technical data - illustrated parts lists with parts catalogue numbers.

.3 Copy of approved shop drawings with corrections completed and marks removed except review stamps.

.4 Complete verification report CAN/ULC-S537 showing no deficiencies and clearly indicates a fully functional system.

.5 List of recommended spare parts for system.

1.7 MAINTENANCE

.1 Provide individual price on tender form for temporary program changes during construction period, to include zone labels, control functions, system operation.

PART 2 Products

2.1 MATERIALS

.1 Equipment and devices: ULC listed and labeled and supplied by single manufacturer.

.2 Power supply: to CAN/ULC-S524.

.3 Audible signal devices: to ULC-S525.

.4 Visual signal devices: to CAN/ULC-S526.

.5 Control unit: to CAN/ULC-S527.

.6 Manual pull stations: to CAN/ULC-S528.

.7 Thermal detectors: to CAN/ULC-S530.

.8 Smoke detectors: to CAN/ULC-S529.

.9 Smoke alarms: to CAN/ULC-S531.

2.2 ACCEPTABLE MANUFACTURERS

.1 All components shall match the existing system.

2.3 SYSTEM OPERATION: SINGLE STAGE – SIGNALS ONLY

.1 Actuation of any alarm initiating device on this stage to:

- .1 Cause audible signalling devices to sound in alarm tone (temporal T3 pattern) in all of the facility.
- .2 Cause fire doors and smoke control doors, if normally held open, to close automatically.
- .3 Cause air conditioning and ventilation fans to shut down or to function to provide required control of smoke movement.
- .4 Cause elevators to return to floor of egress, or to alternate floor, as required.
- .5 Cause additional ancillary device shutdowns to occur.

.2 Signals shall be capable of being silenced in staff supervisory stations and control rooms.

.3 Acknowledging alarm: indicated at central control unit.

.4 Possible to silence signals by "alarm silence" switch at central control unit, after a sixty (60) second period of operation.

.5 Subsequent alarm, received after previous alarm has been silenced, to re-activate signals.

.6 Actuation of any supervisory device to:

.1 Cause electronic latch to lock-in supervisory state at central control unit (and data gathering panels/transponders where installed).

.2 Indicate respective supervisory zone at central control unit and remote annunciator panels.

.3 Cause audible signal at central control unit to sound.

.4 Activate common supervisory sequence.

.7 Resetting alarm or supervisory device will not return system indications/functions back to normal until control unit is reset.

.8 Any second stage alarm shall not initiate a general alarm of the entire site.

.9 Trouble on system to:

.1 Indicate circuit in trouble at central control unit.

.2 Activate "system trouble" indication, buzzer and common trouble sequence. Acknowledging trouble condition to silence audible indication; visual indication to remain until trouble is cleared and system is back to normal.

.3 Troubles on system: suppressed during course of alarm.

.4 Trouble condition on any circuit in system not to initiate alarm conditions.

2.4 CONTROL PANEL

.1 Central control unit (CCU).

.1 Suitable for DCLA communication style: to CAN/ULC-S524.

.2 Features specified are minimum requirements for microprocessor-based system with digital data control and digital multiplexing techniques for data transmission.

.3 Minimum capacity of 250 addressable monitoring and control IDNet and up to 2500 addressable control/signal points. Points may be divided between two (2) communication channels in distributed system, each channel operating independently of other. Faults on one communication channel not to affect operation of other channel.

.4 Maintain 25% spare device capacity in each SLC loop.

.5 System to provide for priority reporting levels, with fire alarm points assigned highest priority, supervisory and monitoring lower priority, and third priority for troubles. Possible to assign control priorities to control points in system to guarantee operation or allow emergency override as required.

.6 Integral power supply, battery charger and standby batteries.

.7 Basic life safety software: retained in nonvolatile Erasable Programmable Read-Only-Memory (EPROM). Extra memory chips: easily field-installed. Random-Access-Memory (RAM) chips in panel to facilitate password-protected field editing of simple software functions (e.g. zone labels, priorities) [and changing of system operation software].

.8 Circuitry to continuously monitor communications and data processing cycles of microprocessor. Upon failure, audible and visual trouble indication to activate.

.9 [Communication between CCU and remote DGP's/TPR's to be supervised, DCLA. Should communications fail between CCU and remote units, audible and visual trouble to be indicated at CCU. Data communication to be binary DC, baseband, time-division multiplex, half-duplex. Each data channel: capable of communicating up to distance of 3,000 m.

.1 [Communication between nodes in networked system to be supervised, DCLA. Should communications fail between any 2 nodes, other nodes on loop to continue to communicate with each other and programmed functions on communicating nodes to continue operating.]

.10 Support up to two (2) RS-232-C I/O ports. CCU output: parallel ASCII with adjustable baud rates to allow interface of any commercially available printer, terminal or PC.

.11 Equipped with software routines to provide Event-Initiated-Programs (EIP); change is status of one or more monitor points, may be programmed to operate any or all of system's control points.

.12 Software and hardware to maintain time of day, day of week, day of month, month and year.

2.5 POWER SUPPLIES

.1 120 V, 60 Hz as primary source of power for system.

.2 Voltage regulated, current limited distributed system power.

.3 Primary power failure or power loss (less than 102 V) will activate common trouble sequence.

.4 Panel load calculation to be submitted with shop drawing submittal.

.5 Interface with battery charger and battery to provide uninterruptible transfer of power to standby source during primary power failure or loss.

.6 During normal operating conditions fault in battery charging circuit, short or open in battery leads to activate common trouble sequence and standby power trouble indicator.

.7 Standby batteries: sealed, maintenance free. Minimum expected lifespan of four (4) years. Sized in accordance with NBC.

.8 Continuous supervision of wiring for external initiating and alarm circuits to be maintained during power failure.

2.6 INITIATING/INPUT CIRCUITS

.1 Receiving circuits for alarm initiating devices such as manual pull stations, smoke detectors, heat detectors and water flow switches, wired in DCLA/DCLC configuration to central control unit.

.2 Alarm receiving circuits (active and spare): compatible with smoke detectors and open contact devices.

.3 Actuation of alarm initiating device: cause system to operate as specified in "System Operation".

.4 Receiving circuits for supervisory, N/O devices. Devices: wired in DCLA configuration to central control unit.

.5 Actuation of supervisory initiating device: cause system to operate as specified in "System Operation".

2.7 ALARM OUTPUT CIRCUITS

.1 Alarm output circuit: connected to signals, wired in class A configuration to central control unit.

.1 Signal circuits' operation to follow system programming; capable of sounding horns continuously in a temporal pattern. Each signal circuit: rated at 4A, 24VDC; fuse-protected from overloading/overcurrent.

2.8 AUXILIARY CIRCUITS

.1 Auxiliary contacts for control functions.

.2 Alarm and supervisory, trouble on system to cause operation of programmed auxiliary output circuits where shown or specified.

.3 Two sets of separate contacts for elevator capture (to main floor of egress and to alternate floor of egress).

.4 Upon resetting system, auxiliary contacts to return to normal or to operate as pre-programmed.

.5 Auxiliary circuits: rated at 4A, 24VDC or 120 VAC, fuse-protected.

2.9 WIRING

.1 Twisted copper conductors installed in conduit.

.2 Minimum wire gauges:

.1 120VAC wiring, #12AWG Cu minimum, installed in conduit.

.2 To initiating circuits: #18 AWG Cu minimum, ULC listed, and in accordance with manufacturer's requirements.

.3 To signal circuits: #16AWG Cu minimum for horn/strobe circuits, ULC listed, #14 AWG for bell circuits, and in accordance with manufacturer's requirements.

.4 To control circuits: #14AWG minimum, ULC listed, and in accordance with manufacturer's requirements.

.3 Size all signaling and control circuits for maximum 5% voltage drop at last signaling/control device on each circuit.

.4 Conduit shall not enter the fire alarm control panel, or any other remotely mounted control panel equipment or back-boxes, except where conduit entry is specified by the manufacturer.

.5 62.5/125µM multi-mode fiber optic cables (to match existing site or otherwise provide 50/125µM where permitted by the manufacturer) from the new CCU to the existing site central control panel located in building 103 in new and existing conduits and ducts to room 008.

2.10 MANUAL ALARM STATIONS

.1 Addressable manual pull station: Pull lever, semi-flush wall mounted type, single action, single stage, electronics to communicate station's status to addressable module/transponder over two (2) wires and to supply power to station. Station address to be labeled on station in field.

2.11 AUTOMATIC ALARM INITIALING DEVICES

.1 Addressable MULTISENSOR detector.

.1 Combination type, Ionization, Photoelectric, and rate of rise heat detection unit type standard (Ionization where shown)'

.2 Addressable thermal fire detector.

.1 Combination fixed temperature and rate of rise, non-restorable fixed temperature element, self-restoring rate of rise, fixed temperature 88EC (or as shown otherwise), rate of rise 8.3 degrees C per minute.

.3 Electronics to communicate detector's status to addressable module/transponder.

.4 Plug in type with fixed base.

.5 Wire-in base assembly with integral red alarm LED.

.6 Detector address to be labeled on detector in field.

2.12 SMOKE DETECTOR COVER

.1 ULC approved steel cage for vandal protection of smoke detectors.

.2 Minimum 14 gauge cold rolled steel, perforated mesh sides, factory painted, complete with mounting frame and manufacturer approved mounting.

.3 Tamper proof machine screws as per manufacturer instructions.

.4 Install in accordance with manufacturer instructions.

2.13 AUDIBLE SIGNAL DEVICES

.1 Horns: 90dBa, red color, 24VDC. Field adjustable volume control.

.2 Weather resistant spacers and seals as required and where shown.

2.14 VISUAL ALARM SIGNAL DEVICES

.1 Strobe type: flashing, white, 24VDC.

.2 Synchronize operation of visual signals.

.3 Field selectable brightness settings (lux/cd).

.4 Designed for surface mounting on walls (or as indicated).

.5 Designed to protect against mechanical damage and vandalism

2.15 AUDIBLE AND VISUAL SIGNAL DEVICE COVERS

.1 Designed to protect against mechanical damage and vandalism.

.2 Minimum 3.175mm clear polycarbonate construction, slotted for audible devices.

.3 Weather resistant spacers and seals as required and where shown.

.4 Standard of acceptance: True Alert 4906 Series

2.16 END-OF-LINE DEVICES

.1 Required for Class B (non-coded) fire alarm circuits.

.2 End-of-line devices to control supervisory current in alarm circuits and/or signaling circuits, sized to ensure correct supervisory current for each circuit. Open, short or ground fault in any circuit will alter supervisory current in that circuit, producing audible and visible alarm at main control panel and remotely as indicated.

.3 Install EOL devices in separate box with labels indicating zone. Where coded devices (addressable) are installed with a single device per zone, the EOL may be installed in the initiating device box.

2.17 REMOTE ANNUNCIATORS

.1 Alphanumeric type, with designation cards to indicate zones.

.2 Display:

.1 Alarms and troubles for alarm initiating circuits.

.2 Supervisory alarms and troubles for supervisory initiating circuits.

.3 Common system trouble.

.3 Trouble buzzer.

.4 Acknowledging trouble at main panel to silence trouble buzzers in system.

.5 Supervised, with LED test button and alarms acknowledge button.

2.18 ANCILLARY DEVICES

.1 Relay output to initiate fan and mechanical equipment shutdown.

.2 Relay output to initiate elevator to land on the alternate floor as per the detector base relay on each lobby.

.3 Relay output to initiate maglock release where required.

.4 Relay outputs to initiate scan on of lighting relays as described in these specifications.

PART 3 Execution

3.1 GENERAL

.1 All construction waste to be handled in accordance with the requirements of Section 01 74 19 - Waste Management and Disposal.

.2 All materials delivered and stored on site shall be protected from theft, mechanical and environmental damage (temperature, moisture, dust and other contaminants).

.3 Prior to completion of the project, manufacturer of the Fire Alarm system shall update all existing remote annunciators, graphical display units and existing Fireworks station to reflect addition of the building and associated devices.

3.2 INSTALLATION

.1 Install systems in accordance with CAN/ULC-S524 [and TB OSH Chapter 3-04].

.2 Install central control unit and connect to ac power supply, [ac] [dc] standby power.

.3 Install manual alarm stations and connect to alarm circuit wiring.

.4 Locate and install detectors and connect to alarm circuit wiring. Do not mount detectors within 1m of air outlets. Maintain at least 600 mm radius clear space on ceiling, below and around detectors. Locate duct type detectors in straight portions of ducts.

.5 Connect alarm circuits to main control panel.

.6 Install horns and visual signal devices and connect to signaling circuits.

.7 Connect signaling circuits to main control panel.

.8 Install end-of-line devices at end of alarm and signaling circuits (as required).

.9 Install remote annunciator panels and connect to annunciator circuit wiring.

.10 Install door releasing devices.

.11 Install remote relay units to control fan shut down.

.12 Sprinkler system: wire alarm and supervisory switches and connect to control panel.

.13 Room detection system.

.14 Install detectors. Make necessary connections between room detection panel and main fire alarm panel.

.15 Locate and install [audible signals] [visual alarms].

.16 Locate and install detectors under raised floor. Fasten to steel brackets approximately 300 mm above sub-floor level to clear cables and conduits.

.17 Connect fire suppression systems to control panel.

.18 Splices are not permitted.

.19 Provide necessary raceways, cable and wiring to make interconnections to terminal boxes, annunciator equipment and CCU, as required by equipment manufacturer.

.20 Ensure that wiring is free of opens, shorts or grounds, before system testing and handing over.

.21 Identify circuits and other related wiring at central control unit, annunciators, and terminal boxes.

3.3 FIELD QUALITY CONTROL

.1 Perform tests in accordance with Section 26 05 01 - Common Work Results - Electrical and CAN/ULC-S537.

.2 Fire Alarm system:

- .1 Test all zones, signal, alarm, ancillary and annunciation devices which have been installed.
- .2 Test such device and alarm circuit to ensure manual stations, thermal and smoke detectors, and sprinkler system devices transmit alarm to control panel and actuate alarm states and operate ancillary devices.

.3 Test each signal device and each signal circuit; including auxiliary inputs and trouble signals.

.4 When the system is equipped with optional features, the manufacturer's manual shall be consulted to determine the proper testing procedures. This is intended to address such items as verifying controls performed by individually addressed or grouped devices, sensitivity monitoring, verification functionality and similar.

.5 Check annunciator panels to ensure zones are shown and actuated correctly. Ensure that each smoke detector and zone is properly annunciated.

.6 Simulate grounds and breaks on alarm and signalling circuits to ensure proper operation of systems.

.7 Tests to be carried out by the Contractor or Contractor(s) agent.

.8 Tests to include witness of fan shutdown, activation of lighting circuits on alarm, magnetic door holder operation, preaction/clean agent system operation and all other ancillary devices.

.9 Tabulated, Contractor stamped, signed and dated test results are to be submitted to the Departmental Representative for review and approval, and included in the O&M manual.

.10 Addressable circuits system style DCLA:

.1 Test each conductor on all DCLA addressable links for capability of providing 3 or more subsequent alarm signals on each side of single open-circuit fault condition imposed near midmost point of each link. Operate Acknowledge/Silence switch after reception of each of the 3 signals. Correct imposed fault after completion of each series of tests.

.2 Test each conductor on all DCLA addressable links for capability of providing 3 or more subsequent alarm signals during ground-fault condition imposed near midmost point of each link. Operate Acknowledge/Silence switch after reception of each of the 3 signals. Correct imposed fault after completion of each series of tests.

.3 Provide final EPROM program for system incorporating program changes made during construction.

3.4 VERIFICATION

.1 Verify all zones, signal, and alarm, which have been installed or modified in any fashion. Verification to CAN/ULC S537. Include verification costs in tender price.

.2 Test each device and alarm circuit to ensure manual stations, thermal and smoke detectors transmit alarm to control panel and actuate first stage alarm, general alarm and ancillary devices.

.3 Test each signal device and each signal circuit. Test to include sound level readings in each room and synchronization test with the strobes and shall be recorded in the test report.

.4 Check the Fire Alarm CCU display to ensure zones are shown and actuated correctly. Ensure that each smoke detector is properly annunciated.

.5 Simulate grounds and breaks on alarm and signaling devices and circuits to ensure proper operation of trouble signals.

.6 Contractor to perform sound level test for each room as per CSA/ULC 537-13.

.7 Test to be carried out in the presence of a Departmental Representative where applicable.

.8 Verification to include the operation at the existing central station connections.

.9 Verification to include a witness of the ventilation system (and other ancillary shutdowns) shutdown on fire alarm.

.10 The Contractor will be responsible for corrective deficiencies in the Contractor's work that are reported by the verification agent.

.11 Fire Alarm verifier to certify one plan drawing. Certification to be included on fire alarm verification report.

.12 Verification shall include verifying all new and added devices and graphics on the new and existing Fire alarm units.

.13 Contractor to carry the cost of the verification in the bid price.

3.5 DEMONSTRATION AND TRAINING

.1 Provide on-site lectures and demonstration by fire alarm equipment manufacturer to train operational personnel in use and maintenance of fire alarm system.

.2 Allow for three (3) separate training sessions, three (3) hours for each.

3.6 RECORD DRAWINGS

.1 Record all wiring, terminations/splicing, pipe runs and junction box locations on the asbuilt drawings. Include wire gauge, conduit size and junction box size.

.2 Record drawings to show ladder diagram of operation detailing input signals to programmed output function for programmed systems.

.3 Record drawings to show fire alarm zoning, device addresses and the location of each field device of the fire alarm system including fault isolation modules, ancillary devices and control panels.

.4 Include room and corridor numbers (Specific area identification)

.5 Show all line voltage branched circuit connections including ancillary connections. Include panel identification, circuit number and over-current protection.

.6 Identify each drawing in lower right hand corner in letters at least 12mm high as follows: “RECORD DRAWINGS: THIS DRAWINGS HAS BEEN REVISED TO SHOW ELECTRICAL SYSTEMS AS INSTALLED” (Signature of Journeyman Contractor) (date).

.7 Submit completed record drawing with Operating & Maintenance manuals to the Departmental Representative for approval and make corrections as directed.

END OF SECTION

PART 1 General

1.1 RELATED WORK

.1 This Section of the Specification forms part of the Contract Documents and is to be read, interpreted and coordinated with all other parts.

.2 Excavation and backfill Division 31

.3 Section 26 05 00 – Common Work - Electrical

.4 Section 26 05 28 – Grounding

.5 Section 26 05 21 – Wire and Cables

.6 Section 26 05 34 – Conduits, Tray, Wireways, Outlet Boxes & Fittings

1.2 SUSTAINABLE REQUIREMENTS

.1 Materials and products in accordance with Division 01 Sustainable Requirements: Construction.

.2 Do verification requirements in accordance with Division 01 Sustainable Requirements: Contractor's Verification.

1.3 REGULATORY REQUIREMENTS

.1 Coordinate and meet requirements of power supply authority. Ensure availability of power when required.

1.4 WASTE MANAGEMENT AND DISPOSAL

.1 Separate and recycle waste materials in accordance with Division 01 - Construction/Demolition Waste Management and Disposal and with the Waste Reduction Workplan.

.2 Avoid using landfill waste disposal procedures when recycling facilities are available.

.3 Place materials defined as hazardous or toxic waste in designated containers.

1.5 SCOPE OF WORK

.1 Provide a complete system of conduits for the distribution of electric power from the new generator to workshops building electrical room.

.2 Provide new pull boxes and identifications as shown on the drawings.

.3 Provide electrical services to miscellaneous equipment as shown on the drawing and described herein.

.4 Provide all work as per CEC 22.1-15 and to the approval of the Departmental Representative.

.5 Conduit is drawn diagrammatically. Conduit to be routed in an orderly manner and where practical, shall maintain a minimum of 3m clear of existing vegetation as indicated on Landscape drawings.

.6 Provide generator concrete pad, installation and all associated work.

.7 Provide housekeeping pads.

PART 2 Products

2.1 CABLE PULLING EQUIPMENT

.1 6 mm stranded nylon pull rope tensile strength 5 kN.

2.2 PULLBOXES FOR SUB DISTRIBUTION

.1 Provide 30” x 24” deep pull boxes as shown on the drawings. Weatherproof for all boxes located outside the building.

.2 Bead welded ID and number of the pull box in nominal 150mm high upper scale letters as indicated.

PART 3 Execution

3.1 CONDUITS INSTALLATION

.1 Install duct as indicated and to manufacturer's instructions.

.2 Ensure full, even support every 1.2 m throughout conduits length.

.3 Provide pull string for all empty conduits for future use.

END OF SECTION

Our energy working for you.™

Power Generation

Parts Breakdown

CUMMINS EASTERN CANADA LP
3189 Swansea Crescent
Ottawa Ontario K1G3W5 Canada
Direct: (613)736-1146
November 13, 2015

Project Name: VCGB 800 kW

Quotation: 447000000240562

Taxes: Extra
FOB: Site
Terms and Conditions as per the NMSOA

Item	Description	
	Diesel Genset: 60Hz-800kW	
Install-OutsideUS	Outside U.S. Application	
800DQCC	Genset-Diesel,60Hz,800kW	
A331-2	Duty Rating-Standby Power	
L170-2	EmissionCert,EPA,Tier 2,NSPS CI Stationary Emergency	
F205-2	Enclosure-Aluminum,SndAtt,Lvl2,Base Mtd,w/ExhSys	
C251-2	Fuel Tank-Subbase,1500 Gallon,UL142 Compliant	
R114-2	Voltage-347/600,3 Phase,Wye,4 Wire	
B604-2	Alt-60Hz,347/600V,80C-S	
H643-2	SET CONTROL-PCC 2100	
H536-2	Display Language-English	
H605-2	Display-Control,Graphical	
H606-2	Meters-AC Output,Analog	
K631-2	Relays-Genset Status, User Configured	
KP60-2	Interface-CommunicationsNtwk,FTT-10	
KP74-2	Stop Switch-Emergency,Externally Mounted	
H609-2	Control Mounting-Left Facing	
KU95-2	CB or EB or TB-Right And Left	
KP89-2	CB-1200A,3P,600/690V,UL/IEC,ServEnt,100%UL,Left	
KB73-2	CB or EB or TB-Bottom Entry, Left	
KP88-2	CB-1200A,3P,600/690V,UL/IEC,ServEnt,100%UL,Right	
KB72-2	CB or EB or TB-Bottom Entry, Right	
KP98-2	Ckt Brkr Access, 24VDC Trip, Aux&Trip Contacts,RS	
KP99-2	Ckt Brkr Access, 24VDC Trip, Aux&Trip Contacts,LS	
P178-2	Enclosure Color-Sandstone,Aluminum Enclosure	
L160-2	Compliance-Fuel Tank, Michigan	
L163-2	Listing, ULC-S601-07	
F207-2	Wind Rating-150MPH,Aluminum Housing	
F208-2	Cooling Air Outlet-Horizontal ,Sound Attenuated	
F210-2	Louvers-Air Inlet,24VDC Spring Closed, Motorized Open	
F212-2	Louvers-AirOutlet,24VDC Motor Opened,Spring Closed	
H657-2	Distribution Panel-Prewired AC Features	

K102-2	ServiceReceptacle-120V,20A,ExternalGFCI,NEMA 5-20R
KS47-2	Enclosure Lighting-120 VAC
C232-2	Alarm-High Fuel Level, External
C127-2	Separator-Fuel/Water
C233-2	Spill/Fill Box-Fuel w/OFPV
C254-2	Vent Extensions-Fuel Tank, 6 Inch Diameter
C256-2	Fuel Tank Connection-Dual Stub Up
B786-2	Battery Charger-12 Amp, Regulated
E074-2	Engine Cooling-Radiator, 50C Ambient
H389-2	Shutdown-Low Coolant Level
H557-2	Coolant Heater-208/240/480V, Below 40F Ambient Temp
D041-2	Engine Air Cleaner-Normal Duty
L017-2	Test-Extended, Standby Load, 4 Hour
L023-2	Test Record-Safety Shutdowns
L028-2	Genset Warranty- Base
L050-2	Literature-English
A412-2	Packing-Base Mtd Housing
CP01-2	Common Parts Listing
SPEC-L	Product Revision - L
0541-0814-02	Annunciator Kit-w/Enclosure

	Bypass Transfer Switch-Power Command: 1200A
BTPC1200	Transfer Switch-Bypass,PwrCmd,1200Amp
A078-7	Transfer Mode-Delayed Transition
A028-7	Poles-3
A035-7	Application-Utility To Genset
A046-7	Listing-UL 1008/CSA Certification
A044-7	Frequency-60 Hertz
A042-7	System-3 Phase,3 Wire Or 4 Wire
R027-7	Voltage-600 Vac
B001-7	Cabinet-Type 1
C024-7	Control-Transfer Switch,Level 2
D009-7	Meters-Bar Graph Display
M018-7	Display-Digital
M022-7	Monitoring-Load
M023-7	Module-Relay Signal
M031-7	Interface-Communications Network,FTT-10
L101-7	Auxiliary Relay-24 Vdc Coil-Installed Only
G010-7	Transfer Switch Warranty - Yr 0-2: Parts, Labor and Travel; Yr 3-5: Parts Only; Yr 6-10: Main Contacts Only
A050-7	Packing-Wooden Crate
CP01-7	Common Parts Listing
SPEC-B	Product Revision - B

Specification sheet

Diesel generator set QSK23 series engine

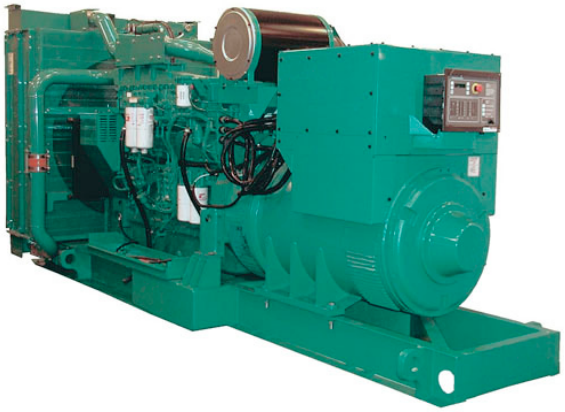

545 kW - 800 kW

Description

Cummins Power Generation commercial generator sets are fully integrated power generation systems providing optimum performance, reliability and versatility for stationary standby and prime power applications.

Features

Cummins® heavy-duty engine - Rugged 4-cycle, industrial diesel delivers reliable power, low emissions and fast response to load changes.

Alternator - Several alternator sizes offer selectable motor starting capability with low reactance 2/3 pitch windings, low waveform distortion with non-linear loads and fault clearing short-circuit capability.

Permanent magnet generator (PMG) - Offers enhanced motor starting and fault clearing short-circuit capability.

Control system - The PowerCommand® electronic control is standard equipment and provides total genset system integration including automatic remote starting/stopping, precise frequency and voltage regulation, alarm and status message display, AmpSentry™ protection, output metering, auto-shutdown at fault detection and NFPA 110 Level 1 compliance.

Cooling system - Standard integral set-mounted radiator system, designed and tested for rated ambient temperatures, simplifies facility design requirements for rejected heat.

Enclosures - Optional weather protective and sound attenuated enclosures are available.

NFPA - The genset accepts full rated load in a single step in accordance with NFPA 110 for Level 1 systems.

Warranty and service - Backed by a comprehensive warranty and worldwide distributor network.

	Standby rating		Prime rating		Continuous rating		Data sheets	
Model	60 Hz kW (kVA)	50 Hz kW (kVA)	60 Hz kW (kVA)	50 Hz kW (kVA)	60 Hz kW (kVA)	50 Hz kW (kVA)	60 Hz	50 Hz
DQCA	600 (750)		545 (681)				D-3352	
DQCB	750 (938)		680 (850)				D-3353	
DQCC	800 (1000)		725 (906)				D-3354	

Our energy working for you.™

cumminspower.com

Generator set specifications

Governor regulation class	ISO 8528 Part 1 Class G3
Voltage regulation, no load to full load	± 0.5%
Random voltage variation	± 0.5%
Frequency regulation	Isochronous
Random frequency variation	± 0.25%
Radio frequency emissions compliance	IEC 801.2 through IEC 801.5; MIL STD 461C, Part 9

Engine specifications

Bore	169.9 mm (6.69 in)
Stroke	169.9 mm (6.69 in)
Displacement	23.15 litres (1413 in3)
Configuration	Cast iron, in line 6 cylinder
Battery capacity	1400 amps minimum at ambient temperature of 0 °C to 10 °C (32 °F to 50 °F)
Battery charging alternator	35 amps
Starting voltage	24 volt, negative ground
Fuel system	Direct injection: number 2 diesel fuel, fuel filter, automatic electric fuel shutoff
Fuel filter	Spin-on fuel filters with water separator
Air cleaner type	Dry replaceable element with restriction indicator
Lube oil filter type(s)	Fleetguard dual venturi spin-on, combination full flow and bypass filters
Standard cooling system	High ambient radiator

Alternator specifications

Design	Brushless, 4 pole, drip proof, revolving field
Stator	2/3 pitch
Rotor	Single bearing flexible discs
Insulation system	Class H
Standard temperature rise	125 °C standby at 40 °C ambient
Exciter type	PMG (permanent magnet generator)
Phase rotation	A (U), B (V), C (W)
Alternator cooling	Direct drive centrifugal blower fan
AC waveform total harmonic distortion	< 5% no load to full linear load, < 3% for any single harmonic
Telephone influence factor (TIF)	< 50 per NEMA MG1-22.43
Telephone harmonic factor (THF)	< 3

Available voltages

60 Hz line-neutral/line-line				50 Hz line-neutral/line-line
• 110/190	• 127/220	• 230/380	• 277/480	
• 115/200	• 139/240	• 240/416	• 347/600	
• 120/208	• 220/380	• 255/440		

Note: Consult factory for other voltages.

Generator set options and accessories

Engine
- ☑ 208/240/480 V coolant heater for ambient above 4.5 °C (40 °F) BELOW
- ☑ Fuel/water separator
- ☐ Heavy duty air cleaner

Control Panel
- ☐ 120/240 V 100 W control anti-condensation heater
- ☐ Paralleling configuration
- ☐ Remote fault signal package
- ☑ Run relay package

Alternator
- ☑ 80 °C rise
- ☐ 105 °C rise
- ☐ 125 °C rise
- ☐ 120/240 V anti-condensation heater
- ☐ Temperature sensor - alternator bearing RTD

Cooling system
- ☑ 50 °C ambient

Exhaust System
- ☐ Industrial grade exhaust silencer
- ☐ Residential grade exhaust silencer
- ☑ Critical grade exhaust silencer

Generator set
- ☐ AC entrance box
- ☐ Battery
- ☐ Battery rack with hold-down - floor standing
- ☑ Circuit breaker - set mounted
- ☐ Disconnect switch - set mounted
- ☐ PowerCommand Network
- ☑ Remote annunciator panel
- ☐ Spring isolators
- ☑ 2 year warranty
- ☐ 5 year warranty
- ☐ 10 year major components warranty

Note: Some options may not be available on all models - consult factory for availability.

Our energy working for you.™

Control system PCC2100 or ~~PCC3201~~


PowerCommand control is an integrated generator set control system providing governing, voltage regulation, engine protection and operator interface functions. Major features include:

- Integral AmpSentry™ Protective Relay providing a full range of alternator protection functions that are matched to the alternator provided.
- Battery monitoring and testing features and smart starting control system.
- Three phase sensing, full wave rectified voltage regulation system, with a PWM output for stable operation with all load types.
- Standard PCCNet™ and optional Echelon® LonWorks® network interface.
- Control suitable for operation in ambient temperatures from -40 °C to +70 °C (-40 °F to +158 °F) and altitudes to 5000 meters (13,000 feet).
- Prototype tested; UL, CSA, and CE compliant.
- InPower™ PC-based service tool available for detailed diagnostics.

Operator/display panel

- Off/manual/auto mode switch
- Manual run/stop switch
- Panel lamp test switch
- Emergency stop switch
- Alpha-numeric display with pushbutton access for viewing engine and alternator data and providing setup, controls and adjustments
- LED lamps indicating genset running, not in auto, common warning, common shutdown
- Configurable for local language

Engine protection

- Overspeed shut down
- Low oil pressure warning and shut down
- High coolant temperature warning and shut down
- High oil temperature warning (some models)
- Low coolant level warning or shut down
- Low coolant temperature warning
- High and low battery voltage warning
- Weak battery warning
- Dead battery shut down
- Fail to start (overcrank) shut down
- Fail to crank shut down
- Redundant start disconnect
- Cranking lockout
- Sensor failure indication

Engine data

- DC voltage
- Lube oil pressure
- Coolant temperature
- Lube oil temperature (some models)
- Engine speed

AmpSentry AC protection

- Over current and short-circuit shut down
- Over current warning
- Single and three phase fault regulation
- Over and under voltage shut down
- Over and under frequency shut down
- Overload warning with alarm contact
- Reverse power and reverse Var shut down
- Excitation fault

Alternator data

- Line-to-line and line-to-neutral AC volts
- Three phase AC current
- Frequency
- Total and individual phase power factor, kW and kVA

Other data

- Genset model data
- Start attempts, starts, running hours
- kW hours (total and since reset)
- Fault history

Governing

- Digital electronic isochronous governor
- Temperature dynamic governing
- Smart idle speed mode
- Glow plug control (some models)

Voltage regulation

- Digital PWM electronic voltage regulation
- Three phase line-to-neutral sensing
- Suitable for PMG or shunt excitation
- Single and three phase fault regulation
- Configurable torque matching

Control functions

- Data logging on faults
- Fault simulation (requires InPower)
- Time delay start and cooldown
- Cycle cranking
- Configurable customer inputs (4)
- Configurable customer outputs (4)
- Configurable network inputs (8) and outputs (16) (with optional network)
- Remote emergency stop

Paralleling (Option)

- Active digital phase lock loop synchronizer
- Isochronous kW and kVar load sharing controls
- kW import/export and kVar/PF control for utility (mains) paralleling

Options

- ☐ PCC 3201 paralleling control
- ☑ LED bargraph AC data display
- ☐ Thermostatically controlled space heater
- ☐ Key-type mode switch
- ☑ Ground fault module
- ☑ Auxiliary relays (3)
- ☐ Echelon LonWorks interface
- ☐ Modion Gateway to convert to Modbus (loose)
- ☐ PowerCommand iWatch web server for remote monitoring and alarm notification (loose)
- ☐ Digital input and output module(s) (loose)
- ☑ Remote annunciator (loose)

For further detail on PCC 2100 see document S-1409.
For further detail on PCC 3201 see document S-1444.

Emergency standby power (ESP):
Applicable for supplying power to varying electrical load for the duration of power interruption of a reliable utility source. Emergency Standby Power (ESP) is in accordance with ISO 8528. Fuel Stop power in accordance with ISO 3046, AS 2789, DIN 6271 and BS 5514.

Limited-time running power (LTP):
Applicable for supplying power to a constant electrical load for limited hours. Limited Time Running Power (LTP) is in accordance with ISO 8528.

Prime power (PRP):
Applicable for supplying power to varying electrical load for unlimited hours. Prime Power (PRP) is in accordance with ISO 8528. Ten percent overload capability is available in accordance with ISO 3046, AS 2789, DIN 6271 and BS 5514.

Base load (continuous) power (COP):
Applicable for supplying power continuously to a constant electrical load for unlimited hours. Continuous Power (COP) in accordance with ISO 8528, ISO 3046, AS 2789, DIN 6271 and BS 5514.

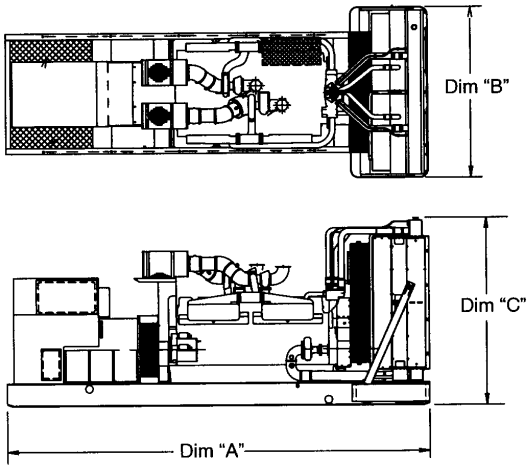

This outline drawing is for reference only. See respective model data sheet for specific model outline drawing number.

Do not use for installation design

Dimensions and weights with standard cooling system

Model	Dim "A" mm (in.)	Dim "B" mm (in.)	Dim "C" mm (in.)	Set Weight* dry kg (lbs)	Set Weight* wet kg (lbs)
DQCA	4395.4 (173)	1855.5 (73)	2065.7 (81)	6075 (13395)	6337 (13973)
DQCB	4395.4 (173)	1855.5 (73)	2065.7 (81)	6075 (13395)	6337 (13973)
DQCC	4395.4 (173)	1855.5 (73)	2065.7 (81)	6075 (13395)	6337 (13973)

Dimensions and weights with optional cooling system with seismic feature codes L228-2 and/or L225-2

Model	Dim "A" mm (in.)	Dim "B" mm (in.)	Dim "C" mm (in.)	Set Weight* dry kg (lbs)	Set Weight* wet kg (lbs)
DQCA	4395.4 (173)	1715 (68)	2060.1 (81.1)	6377 (14061)	6518 (14372)
DQCB	4395.4 (173)	1715 (68)	2060.1 (81.1)	6377 (14061)	6518 (14372)
DQCC	4395.4 (173)	1715 (68)	2060.1 (81.1)	6377 (14061)	6518 (14372)

* Weights represent a set with standard features. See outline drawings for weights of other configurations.

Codes and standards

Codes or standards compliance may not be available with all model configurations – consult factory for availability.

	This generator set is designed in facilities certified to ISO 9001 and manufactured in facilities certified to ISO 9001 or ISO 9002.		The generator set is available listed to UL 2200, Stationary Engine Generator Assemblies for all 60 Hz low voltage models. The PowerCommand control is Listed to UL 508 - Category NITW7 for U.S. and Canadian usage. Circuit breaker assemblies are UL 489 Listed for 100% continuous operation and also UL 869A Listed Service Equipment.
	The Prototype Test Support (PTS) program verifies the performance integrity of the generator set design. Cummins Power Generation products bearing the PTS symbol meet the prototype test requirements of NFPA 110 for Level 1 systems.	**U.S. EPA**	Engine certified to Stationary Emergency U.S. EPA New Source Performance Standards, 40 CFR 60 subpart IIII Tier 2 exhaust emission levels. U.S. applications must be applied per this EPA regulation.
	All low voltage models are CSA certified to product class 4215-01.	**International Building Code**	The generator set package is available certified for seismic application in accordance with the following International Building Code: IBC2000, IBC2003, IBC2006, IBC2009 and IBC2012.

Warning: Back feed to a utility system can cause electrocution and/or property damage. Do not connect to any building's electrical system except through an approved device or after building main switch is open.

North America
1400 73rd Avenue N.E.
Minneapolis, MN 55432
USA
Phone 763 574 5000
Fax 763 574 5298

Our energy working for you.™

S-1551j (3/14)

Power Generation

cumminspower.com

Generator set data sheet

Power Generation

Model: DQCC
Frequency: 60
Fuel type: Diesel
KW rating: 800 standby
725 prime
Emissions level: EPA NSPS Stationary Emergency Tier 2

Exhaust emission data sheet:	**EDS-1088**
Exhaust emission compliance sheet:	**EPA-1122**
Sound data sheet:	**MSP-1160**
Sound data sheet – with seismic feature codes L228-2 (IBC) and/or L225-2 (OSHPD):	**MSP-1014**
Cooling system data in various ambient conditions:	**MCP-249**
Cooling system data in various ambient conditions – with seismic feature codes L228-2 (IBC) and/or L225-2 (OSHPD):	**MCP-175**
Prototype test summary data sheet:	**PTS-160**

Fuel consumption

	Standby				**Prime**				**Continuous**
	kW (kVA)				**kW (kVA)**				**kW (kVA)**
Ratings	800 (1000)				725 (906)				
Load	**1/4**	**1/2**	**3/4**	**Full**	**1/4**	**1/2**	**3/4**	**Full**	**Full**
US gph	17.0	29.0	41.0	53.0	15.5	27.5	38.0	48.0	
L/hr	64.4	109.8	155.2	200.6	58.7	104.1	143.8	181.7	

Engine

	Standby rating	**Prime rating**	**Continuous rating**
Engine manufacturer	Cummins Inc.		
Engine model	QSK23-G7 NR2		
Configuration	Cast Iron, in line 6 cylinder		
Aspiration	Turbocharged and air-to-air aftercooled		
Gross engine power output, kWm (bhp)	910 (1220)	809 (1085)	
BMEP at set rated load, kPa (psi)	2510 (364)	2282 (331)	
Bore, mm (in)	170 (6.69)		
Stroke, mm (in)	170 (6.69)		
Rated speed, rpm	1800		
Piston speed, m/s (ft/min)	10.21 (2010)		
Compression ratio	16:1		
Lube oil capacity, L (qt)	102 (108)		
Overspeed limit, rpm	2100		
Regenerative power, kW	93		

Fuel flow

Maximum fuel flow, L/hr (US gph)	685 (181)	
Maximum fuel inlet restriction, kPa (in Hg)	13.44 (4)	
Maximum fuel inlet temperature, °C (°F)	71 (160)	

Air

	Standby rating	Prime rating	Continuous rating
Combustion air, m^3/min (scfm)	64 (2265)	62 (2201)	
Maximum air cleaner restriction, kPa (in H_2O)	6.2 (25)		
Alternator cooling air, m^3/min (cfm)	117 (4156)		

Exhaust

Exhaust flow at set rated load, m^3/min (cfm)	155 (5455)	147 (5191)	
Exhaust temperature, °C (°F)	483 (902)	461 (862)	
Maximum back pressure, kPa (in H_2O)	10.1 (40.8)		

Standard set-mounted radiator cooling (non-seismic)

Ambient design, °C (°F)	50 (122)		
Fan load, kW_m (HP)	24 (32)		
Coolant capacity (with radiator), L (US gal)	109.5 (29)		
Cooling system air flow, m^3/min (scfm)	998 (35233)		
Total heat rejection, MJ/min (Btu/min)	33.52 (31793)	30.22 (28672)	
Maximum cooling air flow static restriction, kPa (in H_2O)	0.12 (0.5)		
Maximum fuel return line restriction kPa (in Hg)	30.47 (9)		

Optional set-mounted radiator cooling (with seismic feature codes L228-2 (IBC) and/or L225-2 (OSHPD))

Ambient design, °C (°F)	45 (113)		
Fan load, kW_m (HP)	27 (36)		
Coolant capacity (with radiator), L (US gal)	89 (23.5)		
Cooling system air flow, m^3/min (scfm)	1252 (44183)		
Total heat rejection, MJ/min (Btu/min)	33.52 (31793)	30.22 (28672)	
Maximum cooling air flow static restriction, kPa (in H_2O)	0.12 (0.5)		
Maximum fuel return line restriction, kPa (in Hg)	30.47 (9)		

Optional heat exchanger cooling

Set coolant capacity, L (US gal)			
Heat rejected, jacket water circuit, MJ/min (Btu/min)			
Heat rejected, aftercooler circuit, MJ/min (Btu/min)			
Heat rejected, fuel circuit, MJ/min (Btu/min)			
Total heat radiated to room, MJ/min (Btu/min)			
Maximum raw water pressure, jacket water circuit, kPa (psi)			
Maximum raw water pressure, aftercooler circuit, kPa (psi)			
Maximum raw water pressure, fuel circuit, kPa (psi)			
Maximum raw water flow, jacket water circuit, L/min (US gal/min)			
Maximum raw water flow, aftercooler circuit, L/min (US gal/min)			
Maximum raw water flow, fuel circuit, L/min (US gal/min)			
Minimum raw water flow at 27 °C (80 °F) inlet temp, jacket water circuit, L/min (US gal/min)			
Minimum raw water flow at 27 °C (80 °F) inlet temp, aftercooler circuit, L/min (US gal/min)			
Minimum raw water flow at 27 °C (80 °F) inlet temp, fuel circuit, L/min (US gal/min)			
Raw water delta P at min flow, jacket water circuit, kPa (psi)			
Raw water delta P at min flow, aftercooler circuit, kPa (psi)			
Raw water delta P at min flow, fuel circuit, kPa (psi)			
Maximum jacket water outlet temp, °C (°F)			
Maximum aftercooler inlet temp, °C (°F)			
Maximum aftercooler inlet temp at 25 °C (77 °F) ambient, °C (°F)			
Maximum fuel return line restriction, kPa (in Hg)			

Optional remote radiator cooling[1]

	Standby rating	Prime rating	Continuous rating
Set coolant capacity, L (US gal)			
Max flow rate at max friction head, jacket water circuit, L/min (US gal/min)			
Max flow rate at max friction head, aftercooler circuit, L/min (US gal/min)			
Heat rejected, jacket water circuit, MJ/min (Btu/min)			
Heat rejected, aftercooler circuit, MJ/min (Btu/min)			
Heat rejected, fuel circuit, MJ/min (Btu/min)			
Total heat radiated to room, MJ/min (Btu/min)			
Maximum friction head, jacket water circuit, kPa (psi)			
Maximum friction head, aftercooler circuit, kPa (psi)			
Maximum static head, jacket water circuit, m (ft)			
Maximum static head, aftercooler circuit, m (ft)			
Maximum jacket water outlet temp, °C (°F)			
Maximum aftercooler inlet temp at 25 °C (77 °F) ambient, °C (°F)			
Maximum aftercooler inlet temp, °C (°F)			
Maximum fuel flow, L/hr (US gph)			
Maximum fuel return line restriction, kPa (in Hg)			

Weights[2]

Unit dry weight kgs (lbs)	6075 (13395)
Unit wet weight kgs (lbs)	6337 (13973)

Notes:
[1] For non-standard remote installations contact your local Cummins Power Generation representative.
[2] Weights represent a set with standard features. See outline drawing for weights of other configurations.

Derating factors

Standby	Engine power available up to 1137 m (3730 ft) at ambient temperatures up to 40 °C (104 °F). Above these elevations, derate at 4.4% per 305 m (1000 ft). Above 40 °C (104 °F) derate 10% per 10 °C (18 °F).
Prime	*Engine power available up to 754 m (2475 ft) at ambient temperatures up to 40 °C (104 °F). Above these elevations, derate at 4.5% per 305 m (1000 ft). Above 40 °C (104 °F) derate 20.9% per 10 °C (18 °F).*
Continuous	

Ratings definitions

Emergency standby power (ESP):	Limited-time running power (LTP):	Prime power (PRP):	Base load (continuous) power (COP):
Applicable for supplying power to varying electrical load for the duration of power interruption of a reliable utility source. Emergency Standby Power (ESP) is in accordance with ISO 8528. Fuel Stop power in accordance with ISO 3046, AS 2789, DIN 6271 and BS 5514.	Applicable for supplying power to a constant electrical load for limited hours. Limited Time Running Power (LTP) is in accordance with ISO 8528.	Applicable for supplying power to varying electrical load for unlimited hours. Prime Power (PRP) is in accordance with ISO 8528. Ten percent overload capability is available in accordance with ISO 3046, AS 2789, DIN 6271 and BS 5514.	Applicable for supplying power continuously to a constant electrical load for unlimited hours. Continuous Power (COP) is in accordance with ISO 8528, ISO 3046, AS 2789, DIN 6271 and BS 5514.

Alternator data

Voltage	Connection[1]	Temp rise degrees C	Duty[2]	Single phase factor[3]	Max surge kVA[4]	Winding No.	Alternator data sheet	Feature Code
277/480	Wye	125/105	S/P		2944	312	ADS-309	B276-2
277/480	Wye	105	S		3313	312	ADS-310	B280-2
347/600	Wye	125/105	S/P		2944	7	ADS-309	B550-2
220/380	Wye	105/80	S/P		4234	312	ADS-312	B599-2
277/480	Wye	80	S		3866	312	ADS-311	B601-2
347/600	Wye	105/80	S/P		3866	7	ADS-311	B603-2
347/600 ✓	Wye	80	S		3866	7	ADS-311	B604-2
220/380	Wye	80	P		3866	312	ADS-311	B687-2
277/480	Wye	80	P		3866	312	ADS-311	B694-2
208/416	Wye	125/105	S/P		3313	311	ADS-310	B732-2
208/416	Wye	105/80	S/P		3866	311	ADS-311	B733-2
208/416	Wye	80	S		4234	311	ADS-312	B734-2
220/380	Wye	125	P		3313	312	ADS-310	B736-2
220/380	Wye	125/105	S/P		3866	312	ADS-311	B737-2
255/440	Wye	125/105	S/P		3313	312	ADS-310	B741-2

Notes:

[1] Limited single phase capability is available from some three phase rated configurations. To obtain single phase rating, multipy the three phase kW rating by the Single Phase Factor[3]. All single phase ratings are at unity power factor.

[2] Standby (S), Prime (P) and Continuous ratings (C).

[3] Factor for the *Single Phase Output from Three Phase Alternator* formula listed below.

[4] Maximum rated starting kVA that results in a minimum of 90% of rated sustained voltage during starting.

Formulas for calculating full load currents:

Three phase output

$$\frac{\text{kW} \times 1000}{\text{Voltage} \times 1.73 \times 0.8}$$

Single phase output

$$\frac{\text{kW} \times \text{SinglePhaseFactor} \times 1000}{\text{Voltage}}$$

Warning: Back feed to a utility system can cause electrocution and/or property damage. Do not connect to any building's electrical system except through an approved device or after building main switch is open.

North America
1400 73rd Avenue N.E.
Minneapolis, MN 55432
USA

Phone 763 574 5000
Fax 763 574 5298

Our energy working for you.™

D-3354h (3/14)

Power Generation

cumminspower.com

PowerCommand® 2100 digital generator set control

> Specification sheet

Our energy working for you.™

Cummins® Power Generation

Description

The PowerCommand® 2100 Control is a microprocessor-based generator set monitoring, metering and control system. The control provides an operator interface to the genset, digital voltage regulation, digital governing and generator set protective functions. The integration of all the functions into a single control system provides enhanced reliability and performance compared to conventional control systems.

The PowerCommand control is designed for mounting on the generator set and is suitable for use on a wide range of generator sets in non-paralleling applications. The PowerCommand Control will directly read AC voltages up to 600 VAC and can be configured for any frequency, voltage and power connection configuration from 120 to 600 VAC.

The control offers a wide range of standard control and digital display features so custom control configurations are not needed to meet application specifications. System reliability is not compromised by use of untested special components.

Power for PowerCommand Control is usually derived from the generator set starting batteries. It functions without degradation in performance over a voltage range from 8 VDC to 35 VDC.

Features

Digital engine speed governing controls - Provide isochronous frequency regulation (optional on some genset models).

Digital voltage regulation – 3-phase sensing.

AmpSentry™ protective relay – UL Listed, true alternator over current protection.

Analog and digital AC output metering.

Battery monitoring system - Senses and warns against a weak battery condition.

Digital alarm and status message display.

Generator set monitoring - Displays status of all critical engine and alternator functions.

Smart starting control system - Temperature dynamic integrated fuel ramping to limit black smoke and frequency overshoot, in addition to optimized cold weather starting.

PCCNet Interface - A proprietary RS485 network interface to allow easy plug and play interface to remote annunciators, relay modules for extensible I/O and other devices.

Advanced serviceability - Interfaces to InPower™, a PC-based software service tool. A version of InPower is available for customer use.

PowerCommand LonWorks® network (optional) - Provides interfaces to external devices through a twisted pair wire and other media.

Certifications - Suitable for use on generator sets that are designed, manufactured, tested, and certified to relevant UL, NFPA, ISO, IEC, and CSA standards.

Warranty and service - Backed by a comprehensive warranty and worldwide distributor service network.

Operator panel

The operator panel provides the user with a complete package of easy to view and use information. Connections to the operator panel are locking plug interfaces for reliable, vibration-resistant interconnection to the generator set wiring harness.

Control switches and functions

Off/manual/auto mode control switch - The *not in auto* lamp will flash when the control is in the *manual* or *off* mode. In the *auto* mode, the generator set can be started with a start signal from a remote device, such as an automatic transfer switch.

Manual run/stop control switch - When the mode control switch is in the *manual* position and the *manual/run/stop* switch is pressed, the generator set will start, bypassing time delay start. The control is configurable to include an idle period on manual start. If the generator set is running in the *manual* mode, pressing the *run/stop* switch will cause the generator set to shut down after a cool down at idle period.

Panel lamp/lamp test control switch - Depressing the *panel lamp* switch will cause the panel illumination to operate for approximately 10 minutes. Pressing and holding the switch will sequentially illuminate all LED lamps on the panel to confirm proper operation of these components.

Fault acknowledge/reset switch - The control includes a *fault acknowledge* function to allow the operator to reset the fault condition. If the fault condition is not corrected, the fault will reappear, but will not be logged as a separate event. Multiple faults can be logged and displayed at one time.

Emergency stop control switch - Pressing the *emergency stop* switch will cause the generator set to immediately shut down. The generator set is prevented from running or cranking with the switch pressed in.

Operator adjustments - The control includes provisions for many set up and adjustment functions via raise/lower switches on the operator panel. Functions that can be adjusted by the operator include:

- Time delay start (0-300 seconds)
- Time delay stop (0-600 seconds)
- Alternator voltage (±5%)
- Alternator frequency (±5%)

Indicating lamps

The operator panel includes a series of LED indicating lamps to allow the operator to view the general status of the generator set. Functions displayed include:

Green lamps to indicate generator set running (operating at rated voltage and frequency); remote start signal received.

Red (flashing) lamp to indicate not-in-auto mode and a red lamp to indicate common shutdown.

Amber lamp for common warning.

Lamps (5) are configurable for color and function. These lamps are configured with InPower for any condition monitored by the control. Default configuration for these lamps include the following functions:

- Low oil pressure warning
- High engine temperature warning
- Low oil pressure shutdown
- Over speed shutdown
- Fail to start

Analog AC metering panel (optional)

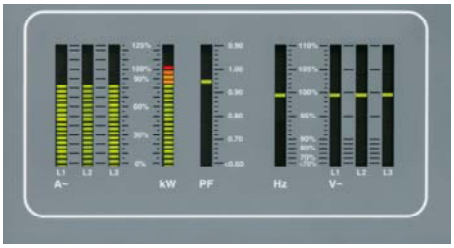

The PowerCommand control can be equipped with an analog AC metering panel that simultaneously displays 3-phase line-to-line AC volts and current, kW, power factor, and frequency.

The meter panel is composed of a series of LEDs configured in bar graphs for each function. The LEDs are color coded, with green indicating normal range values, amber for warning levels and red for shutdown conditions. Scales for each function are in % of nominal rated values. Resolution is 1% for values close to nominal and increases at values far from nominal.

Alphanumeric display panel

The PowerCommand control is provided with an alphanumeric display capable of displaying 2 lines of data with approximately 20 characters per line. The display is accompanied by a set of six tactile-feel membrane switches that are used by the operator to navigate through

Power Generation

control menus and to make control adjustments. (There are no rotary potentiometers in the control. All adjustments are made via the display panel or InPower). Display is configurable for multiple languages. It is configurable for units of measurement.

All data on the control can be viewed by scrolling through screens with the navigation keys.

The control displays all active fault conditions with the latest displayed first. Active and inactive faults are displayed.

The display panel includes a screen-saver timer that will turn off the display after 30 minutes of inactivity. Touching any key will turn the screen back on.

Generator set hardware data - Generator set rating in kVA, complete generator set model number and provisions for generator set serial number, engine model and serial number, and alternator model and serial number. The control stores the part number of the control and the software version present in the control. This information is read using InPower.

Data logs - Number of start attempts and number of start attempts since reset. Number of times generator set has run and duration of generator set running time. Generator set kWh produced. The control also stores number of start attempts, operating hours and kW hours since each has been reset. This data is read with InPower.

Adjustment history - Provides a record of adjustment and setting changes made on the control and identifies whether adjustment was made via the operator panel or with a service tool. If a service tool is used, the control provides a record of the serial number of the tool used. This information is read with InPower.

Fault history - Provides a record of the most recent fault conditions with time stamp, along with the number of times each fault has occurred. Up to 20 events are stored in the control non-volatile memory.

Load profile data - Control logs data indicating the operating hours at percent of rated kW load in 10% increments. The data is presented on the operator panel based on total operating hours on the generator set based on number of hours under 30% load and number of hours at more than 90% of rated. InPower can be used to read data in detail (10% increments).

Generator set output voltage - All phases, line-to-line and line-to-neutral, accuracy 1%. Data for all phases is displayed simultaneously to allow viewing of voltage balance.

Generator set output current - All phases, accuracy 1%. Data for all phases is displayed simultaneously to allow viewing of load balance.

Generator set output frequency.

Generator set power output - PowerCommand displays generator set kW and kVA output (average and individual phase and direction of flow), and power factor with leading/lagging indication. Accuracy 5%.

Generator set kWh power output - Displays total kilowatt-hours produced by the generator set and total produced since last reset, with time stamp of time of last reset.

Generator set control temperature.

Engine starting battery voltage.

Engine lube oil pressure.

Engine coolant temperature.

Engine lube oil temperature (option on some genset models).

System data display - The generator set will exchange data with Cummins Power Generation transfer switches utilizing PowerCommand transfer controls and other generator sets using the PowerCommand 2100 control that are located on the same site and interconnected using a PowerCommand network. Information displayed from each transfer switch in the system includes: transfer switch name (assigned by customer at site), kW load (when fitted with load monitoring equipment), sources available, source connected and if any alarm conditions are present on the switch. Genset data includes genset name, kW load, status and name of any alarm conditions that are present.

Service adjustments - The operator panel includes provisions for adjustment and set up of all control functions in the generator set. The operator panel includes an access code that is used to protect the control from unauthorized service level adjustments.

Internal control functions

Engine control

Remote start mode - PowerCommand accepts a ground signal from remote devices or a network signal to automatically start the generator set and immediately accelerate to rated speed and voltage.

PowerCommand includes a smart starting system that is designed to quickly start the engine, minimize black smoke, minimize voltage and frequency overshoot, and oscillations on starting. The control system does this by careful control of the engine fuel system and alternator excitation system.

The control can incorporate a time delay start and a warm-up period at idle speed. See *Engine governing* for details.

Sleep mode - PowerCommand can be configured to include a sleep mode. When enabled, and when the mode select switch is in the off position, the control will revert to

Power Generation

a low power consumption mode until a control switch on the operator panel is operated (reset, panel lamp, manual run or emergency stop).

Data logging - The control maintains a record of manual control operations, warning and shutdown conditions, and other events. The control also stores critical engine and alternator data before and after a fault occurs, for use by InPower and the technician in evaluating the root causes for the fault condition.

Fault simulation mode - PowerCommand, in conjunction with InPower software, will accept commands to allow a technician to verify the proper operation of all protective functions of the control by simulating failure modes or by forcing the control to operate outside of its normal operating ranges.

Engine starting - The control system automatically controls the engine starter and provides proper engine fueling and alternator control to provide fast and efficient starting.

Cycle cranking - Configurable for number of starting cycles (1 to 7) and duration of crank and rest periods. Control includes starter protection algorithms to prevent the operator from specifying a starting sequence that might be damaging.

Time delay start and stop (cool down) - Configurable for time delay of 0-300 seconds prior to starting after receiving a remote start signal; and for time delay of 0-600 seconds prior to ramp-to-idle or shutdown after signal to stop in normal operation modes. Default for both time delay periods is 0 seconds.

Engine governing

The PowerCommand control includes integrated digital governing capability to directly drive an engine fuel control valve. Features of the governing system (when enabled) include:

Isochronous governing - Controls engine speed within ±0.25% for any steady state load from no load to full load. Frequency drift will not exceed ±0.5% for a 33 °C (60 °F) change in ambient temperature over an 8 hour period.

Temperature dynamics - Modifies the engine fuel system (governing) control parameters as a function of engine temperature. Allows engine to be more responsive when warm and more stable when operating at lower temperature levels.

Smart idle mode - Engine governing can be regulated at an idle speed for a programmed period on automatic stop of the engine or in manual mode. In an automatic mode, the control will bypass the idle period if the engine is at a low load level for sufficient duration for cool down. During idle mode engine protective functions are adjusted for the lower engine speed, and alternator function and protections are disabled.

Idle speed can be initiated by the operator when the generator set is running in the manual mode.

Glow plug control (optional) - Modifies the engine start cycle to include a programmed time period for operation of glow plugs. This feature is available on generator sets that require glow plug control only.

Alternator control

PowerCommand includes an integrated 3-phase line-to-neutral sensing voltage regulation system that is compatible with either shunt or PMG type excitation systems (some generator set models are always PMG). The voltage regulation system is full wave rectified and has a PWM output for good motor starting capability and stability when powering non-linear loads. Major system features include:

Digital output voltage regulation - PowerCommand will regulate output voltage to within 0.5% for any loads between no load and full load. Voltage drift will not exceed ±0.5% for a 33 °C (60 °F) change in temperature in an 8 hour period. On engine starting, or sudden load acceptance, voltage is controlled to a maximum of 5% overshoot over nominal level.

Torque-matched V/Hz overload control - The voltage roll-off set point and rate of decay (i.e., the slope of the V/Hz curve) is adjustable in the control.

Fault current regulation - PowerCommand will regulate the output current on any phase to a maximum of 3 times rated current under fault conditions for both single phase and three phase faults. The regulation system will drive a permanent magnet generator (PMG) to provide 3 times rated current on all phases for motor starting and short circuit coordination purposes.

Protective functions

On a warning condition the control will indicate a fault by lighting the warning LED on the control panel and displaying the fault name and code on the operator display panel. The nature of the fault and time of occurrence are logged in the control. The service manual and InPower service tool provide service keys and procedures based on the service codes provided.

On a shutdown condition, the control will light the shutdown LED on the control panel, display the fault name and code, initiate shutdown and lock out the generator set. The control maintains a data log of all fault conditions as they occur and time stamps them with the controller run time and engine operating hours data. Adjustments to most set points are made using the InPower service tool.

The control system includes a *"fault bypass"* mode that may be enabled by a service technician. The fault bypass mode forces the system to function regardless of the status of protective functions. (Each function must be individually bypassed.) In this mode the only protective functions that are operational are over speed, loss of speed sensor, moving the control switch to the off position or pressing the emergency stop switch. The control maintains a record of the time that the mode is enabled,

and all warning or shutdown conditions that have occurred while in the *"fault bypass"* mode.

The control system automatically captures the generator set logged parameters on a fault condition.

Many protective functions within the control system are configurable for warning, shutdown or both (2 levels). Exceptions to this include functions such as over speed conditions and loss of speed sensing. In addition, some functions can incorporate control functions as a consequence of a fault.

System protective functions:

Ground fault warning (optional) - 600 VAC class generator sets with solid ground. Ground fault sensing is adjustable over a range of 100-1200 amps with time delays of 0-1 second. May be configured for shutdown rather than alarm.

Configurable alarm and status inputs - PowerCommand will accept up to four alarm or status inputs (configurable contact closed to ground or open) to indicate customer-specified conditions. The control is programmable for warning, shutdown or status indication, and for labeling the input. Eight additional faults can be input to the control via the network.

Emergency stop - Annunciated whenever the local or remote emergency stop signal is received. Alarm panel distinguishes between local or remote operation.

Engine protection

Over speed shutdown - Default setting is 115% of nominal.

Low lube oil pressure shutdown - Level is preset to match the capabilities of each engine. Control includes time delays to prevent nuisance shutdown signals.

Low lube oil pressure warning - Level is preset to match the capabilities of each engine. Control includes time delays to prevent nuisance shutdown signals.

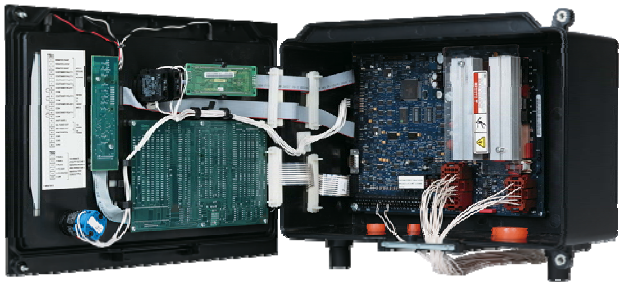

High coolant temperature shutdown - Level is preset to match the capabilities of each engine. Control includes time delays to prevent nuisance shutdown signals.

High coolant temperature warning - Level is preset to match the capabilities of each engine. Control includes time delays to prevent nuisance shutdown signals.

High oil temperature warning (optional) - Level is preset to match the capabilities of each engine. Control includes time delays to prevent nuisance shutdown signals.

Low coolant level warning/shutdown - Optional on some genset models.

Low coolant temperature warning - Indicates that engine temperature may not be high enough for a 10-second start or proper load pickup.

Low and high battery voltage warning - Indicates battery charging system failure by continuously monitoring battery voltage.

Weak battery warning - The control system will test the battery bank each time the generator set is signaled to start, and indicate a warning if the generator set battery indicates impending failure.

Dead battery shutdown - Indicates that generator set failed to start due to failed starting battery.

Fail to start (overcrank) shutdown.

Fail to crank shutdown - Control has signaled starter to crank engine but engine does not rotate.

Redundant starter disconnect.

Cranking lockout - The control will not allow the starter to attempt to engage or to crank the engine when the engine is rotating.

Sensor failure indication - All analog sensors are provided with sensor failure logic to indicate if the sensor or interconnecting wiring has failed. Separate indication is provided for fail high or low.

AmpSentry protective relay

AmpSentry protective relay is a UL Listed comprehensive monitoring and control system integral to the PowerCommand Control System that guards the electrical integrity of the alternator and power system by providing protection against a wide array of fault conditions in the generator set or in the load. It also provides single and three phase fault current regulation so that downstream protective devices have the maximum current available to quickly clear fault conditions without subjecting the alternator to potentially catastrophic failure conditions. See document R1053 below for a full size time over current curve.

Over current warning - Output current on any phase at more than 110% of rating for more than 60 seconds or more than 400% for more than 1 second.

Over current shutdown (51) - Output current on any phase is more than 110%, less than 175% of rating and approaching thermal damage point of alternator. Control includes algorithms to protect alternator from repeated over current conditions over a short period of time.

Power Generation

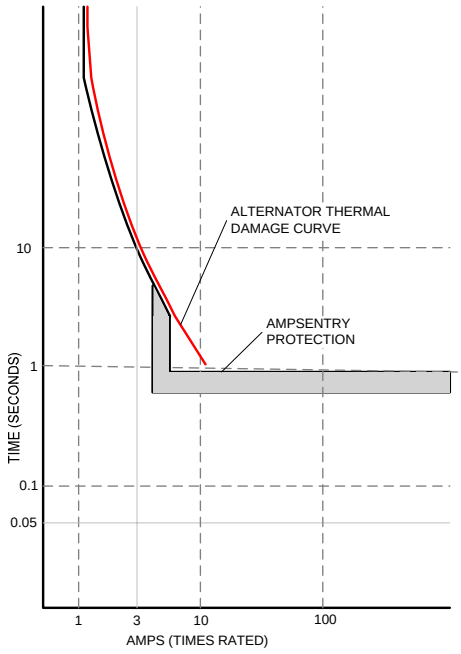

Short circuit shutdown - Output current on any phase is more than 110%, more than 175% of rating, and approaching thermal damage point of alternator. Control includes algorithms to protect alternator from repeated over current conditions over a short period of time.

High AC voltage shutdown (59) - Output voltage on any phase exceeds preset values. Time to trip is inversely proportional to amount above threshold. Values adjustable from 105-125% of nominal voltage with time delay adjustable from 0.25-10 seconds. Default value is 110% for 10 seconds.

Low AC voltage shutdown (27) - Voltage on any phase has dropped below a preset value. Adjustable over a range of 50-95% of reference voltage, time delay 2-10 seconds. Default value is 85% for 10 seconds. Function tracks reference voltage.

Under frequency shutdown (81u) - Generator set output frequency cannot be maintained. Settings are adjustable from 0-10 Hz below nominal governor set point for a 0-20 second time delay. Default: 6 Hz, 10 seconds.

Over frequency shutdown/warning (81o) - Adjustable for operation in a range of 0-10 Hz above nominal frequency, with a time delay of 0-20 seconds. Defaults: Disabled.

Over load (kW) warning - Provides a warning indication when engine is operating at a load level over a set point or due to under frequency. Adjustment range: 50-140% of rated kW, 0-120 second delay. Defaults: 105%, 60 seconds.

Reverse power shutdown (32) - Adjustment range: 5-20% of standby kW rating, delay 1-15 seconds. Defaults: 10%, 3 seconds.

Reverse Var shutdown - Shutdown level is adjustable: threshold 0.15-0.50 per unit, delay 10-60 seconds. Defaults: 0.20, 10 seconds.

Excitation fault - Shutdown of generator set will occur on loss of voltage sensing inputs to control.

Environment

The control is designed for proper operation without recalibration in ambient temperatures from -40 °C to +70 °C (-40 °F to +158 °F), and for storage from 55 °C to +80 °C (-67 °F to +176 °F). Control will operate with humidity up to 95%, non-condensing. Control operation is not restricted by altitude.

The control system is housed in a NEMA 3R/IP53 enclosure. The operator control panel has a single membrane surface which is impervious to the effects of dust, moisture, oil and exhaust fumes. The panel uses sealed membrane or oil-tight switches to provide long reliable service life in harsh environments.

The control system is specifically designed and tested for resistance to RFI/EMI and to resist the effects of vibration to provide a long reliable life when mounted on a generator set. The control includes transient voltage surge suppression to provide compliance to referenced standards.

Control interface

Input signals to the PowerCommand control include:

Remote start signal - May be connected via either discrete signal or Lon™ Network, or both.

Remote emergency stop.

Remote alarm reset.

Configurable customer inputs - Control includes (4) input signals from customer discrete devices that are configurable for warning, shutdown or status indication, as well as message displayed.

Output signals from the control include four configurable relay drivers. Defaults for these are:

Generator set common warning signal - Operates when unit set is running under alarm conditions.

Generator set common shutdown signal.

Our energy working for you.™

www.cumminspower.com

Power Generation

Not in auto - Indicates that the mode control switch is not in the *auto* position or that the genset is shutdown under a fault condition.

Ready to load (generator set running) signal - Operates when the generator set has reached 90% of rated speed and voltage and latches until generator set is switched to *off* or *idle* mode.

Control power for auxiliary devices is available from the controller.

Network connections include:

PCCNet interface - A proprietary dedicated RS485 network for use in operating remote annunciator panels and remote I/O modules.

Serial interface - This communication port is to allow the control to communicate with a personal computer running InPower software.

Echelon® LonWorks® interface (optional).

Software

InPower - A PC-based software service tool that is designed to directly communicate to PowerCommand generator sets and transfer switches to facilitate service and monitoring of these products.

PowerCommand for Windows® - A software tool that is used primarily by operators to remotely monitor and control generator sets, transfer switches and other on-site power system devices.

Warranty

PowerCommand control systems are a part of complete power systems provided by Cummins Power Generation, and are covered by a one-year limited warranty as a standard feature.

Extended warranty options are available for coverage up to 10 years.

Certifications

PowerCommand meets or exceeds the requirements of the following codes and standards:

NFPA110: For Level 1 systems
UL508: Recognized or Listed and suitable for use on UL 2200 Listed generator sets
CSA C282-M1999: Compliance
CSA 22.2: No. 14 M91 Industrial Controls
ISO 8528-4: 1993 compliance, Controls and Switchgear
NFPA99: Standard for Health Care Facilities
CE Mark: Control system suitable for use on generator sets to be CE-marked
EN 50081-2: Industrial Emissions
EN 50082-2: Industrial Susceptibility
ISO 7637, pulses #2b, 4: DC Supply Surge Voltage Test
Mil Std 202C, Method 101: Salt Fog Test
ANSI C62.41: Surge Withstand
IEC 801.2, 3, 4, 5: For Susceptibility, Conducted and Radiated Electromagnetic Emissions.
ISO9001: PowerCommand control systems and generator sets are designed and manufactured in ISO9001 certified facilities.

Options and accessories

- ☑ Analog AC metering display - Provides a bar graph display of 3-phase AC volts and amps, kW, power factor and frequency.
- ☐ Key-type mode select switch - Replaces off/manual/auto switch with a key-type switch.
- ☑ Ground fault alarm module - Installs a separate ground fault indication relay and harness into a control customer input.
- ☐ Exhaust temperature monitoring.
- ☑ Digital remote annunciator.
- ☐ Digital output relay module - Provides (3) relays, each with 2 normally open and 2 normally closed contacts rated 10 A at 600 VAC, 5 A at 24 VDC. Functions of the relays are configurable.
- ☐ Engine oil temperature indication - Some genset models incorporate this feature as standard. On all models, the control may be configured to include an oil temperature warning or shutdown when oil temperature sensing is provided.
- ☐ CAN engine interface (optional on some models). Allows the genset control to directly monitor an engine control module.
- ☐ LON interface.
- ☐ Input/output expansion module – Provides up to 16 configurable Form-C relays, 12 configurable discrete inputs and 8 analog inputs.

Our energy working for you.™

www.cumminspower.com

Cummins Power Generation

ALTERNATOR DATA SHEET

Frame Size: HC6J

CHARACTERISTICS

WEIGHTS:	Wound Stator Assembly	2442	lb	1100	kg
	Rotor Assembly	2109	lb	950	kg
	Complete Alternator	4984	lb	2245	kg
MAXIMUM SPEED:		2250	rpm		
EXCITATION CURRENT:	Full Load	2.5	Amps		
	No Load	0.5	Amps		
INSULATION SYSTEM:	Class H Throughout				

3 Ø RATINGS (0.8 power factor) (Based on specified temperature rise at 40ºC ambient temperature)		60 Hz				50 Hz		
		110/190* 220/380	120/208* 240/416	139/240* 277/480	347/600	110/190* 220/380	120/208* 240/415	127/220* 254/440
150ºC Rise Ratings	kW	880	965	1080	1080	848	848	848
	kVA	1100	1206	1350	1350	1060	1060	1060
125ºC Rise Ratings	kW	840	920	1040	1040	800	800	800
	kVA	1050	1150	1300	1300	1000	1000	1000
105ºC Rise Ratings	kW	775	850	950	950	720	720	720
	kVA	969	1063	1188	1188	900	900	900
80ºC Rise Ratings	kW	675	740	828	828	640	640	640
	kVA	844	925	1035	1035	800	800	800

REACTANCES (per unit, ±10%) (Based on full load at 125ºC Rise Rating	110/190* 220/380	120/208* 240/416	139/240* 277/480	347/600	110/190* 220/380	120/208* 240/415	127/220* 254/440
Synchronous	3.71	3.39	2.88	2.88	3.03	2.54	2.26
Transient	0.28	0.26	0.22	0.22	0.26	0.21	0.19
Subtransient	0.20	0.19	0.16	0.16	0.18	0.15	0.13
Negative Sequence	0.26	0.23	0.20	0.20	0.22	0.18	0.16
Zero Sequence	0.03	0.03	0.02	0.02	0.03	0.02	0.02

MOTOR STARTING	Broad Range	600	Broad Range
Maximum kVA (90% Sustained Voltage)	3866	3866	2625

TIME CONSTANTS (Sec)	Broad Range	600	Broad Range
Transient	0.185	0.185	0.185
Subtransient	0.025	0.025	0.025
Open circuit	3.030	3.030	3.030
DC	0.046	0.046	0.046

WINDINGS (@ 20ºC)	Broad Range	600	Broad Range
Stator Resistance (Ohms per phase)	0.0048	0.0060	0.0048
Rotor Resistance (Ohms)	1.6600	1.6600	1.6600
Number of Leads	6 (12 Optional)	6	6 (12 optional)

* 12 lead reconnectible option is required to obtain low (parallel wye) voltages.

PROTOTYPE TEST SUPPORT (PTS)
60 HZ TEST SUMMARY

GENERATOR SET MODELS		REPRESENTATIVE PROTOTYPE	
600DQCA	750DQCB	Model:	800DQCC
800DQCC		Alternator:	HC6H
		Engine:	QSK23-G3 NR1

The following summarizes prototype testing conducted on the designated representative prototype of the specified models. This testing is conducted to verify the complete generator set electrical and mechanical design integrity. Prototype testing is conducted only on generator sets not sold as new equipment.

Maximum Surge Power: 833 kW

The generator set was evaluated to determine the stated maximum surge power.

Torsional Analysis and Testing:

The generator set was tested to verify that the design is not subjected to harmful torsional stresses. A spectrum analysis of the transducer output was conducted over the speed range of 1350 to 1950 RPM.

Cooling System: 50 °C Ambient
0.5 in. H2O restriction

The cooling system was tested to determine ambient temperature and static restriction capabilities. The test was performed at full rated load in elevated ambient temperature under stated static restriction conditions.

Durability:

The generator set was subjected to a minimum 500 hour endurance test operating at variable load up to the standby rating based upon MIL-STD-705 to verify structural soundness and durability of the design.

Electrical and Mechanical Strength:

The generator set was tested to several single phase and three phase faults to verify that the generator can safely withstand the forces associated with short circuit conditions. The generator set was capable of producing full rated output at the conclusion of the testing.

Steady State Performance:

The generator set was tested to verify steady state operating performance was within the specified maximum limits.

Voltage Regulation:	±0.50%
Random Voltage Variation:	±0.50%
Frequency Regulation:	Isochronous
Random Frequency Variation:	±0.25%

Transient Performance:

The generator set was tested with the standard alternator to verify single step loading capability as required by NFPA 110. Voltage and frequency response on load addition or rejection were evaluated. The following results were recorded:

Full Load Acceptance:		
Voltage Dip:	35.0	%
Recovery Time:	2.5	Second
Frequency Dip:	8.3	%
Recovery Time:	3.5	Second
Full Load Rejection:		
Voltage Rise:	24.1	%
Recovery Time:	1.2	Second
Frequency Rise:	3.8	%
Recovery Time:	1.6	Second

Harmonic Analysis:
(per MIL-STD-705B, Method 601.4)

	Line to Line		Line to Neutral	
Harmonic	No Load	Full Load	No Load	Full Load
3	0.052	0.04	0.144	0.092
5	0.128	1.36	0.058	1.32
7	1	0.196	1	0.19
9	0.012	0.034	0.033	0.066
11	0.985	0.84	1.01	0.83
13	0.158	0.32	0.12	0.29
15	0	05	0.025	0.022

Power Generation

Sound Data

800DQCC 60Hz

Sound Pressure Level @ 7 meters, dB(A)

See Notes 1-8 listed below

Configuration		Measurement Location Number								Average
		1	2	3	4	5	6	7	8	
Standard - Unhoused	Infinite Exhaust	93.5	97.6	96.7	96.4	95.3	94.7	94.3	94.2	95.6
F200 –Weather	Mounted Muffler	87.4	92.3	81.2	82.8	90.5	81.5	78.5	87.9	87.6
F201 - Quiet Site II First Stage	Mounted Muffler	74.4	75.1	76.7	82.6	90.5	80.8	72.1	72.2	82.9
F202 - Quiet Site II Second Stage	Mounted Muffler	72.1	77.4	78.2	74.4	78.2	71.7	73.2	72.5	74.8

Sound Power Level, dB(A)

See Notes 2-6, 9, 10 listed below

Configuration		Octave Band Center Frequency (Hz)								Overall Sound Power Level
		63	125	250	500	1000	2000	4000	8000	
Standard - Unhoused	Infinite Exhaust	85.6	107.7	110.5	114.5	116.8	110.5	119.2	120.4	125.2
F200 –Weather	Mounted Muffler	93.4	105.4	107.7	107.6	108.1	105.1	108.0	109.1	116.0
F201 - Quiet Site II First Stage	Mounted Muffler	92.4	104.1	102.2	101.0	101.3	100.3	103.8	105.6	111.5
F202 - Quiet Site II Second Stage	Mounted Muffler	86.3	100.0	97.8	92.6	99.8	98.5	102.9	101.5	108.4

Exhaust Sound Power Level, dB(A)

Open Exhaust (No Muffler Rated Load)	Octave Band Center Frequency (Hz)								Sound Power Level
	63	125	250	500	1000	2000	4000	8000	
	104.1	114.0	123.5	122.2	124.6	125.0	123.4	121.5	131.8

Note:

1. Position 1 faces the engine front. The positions proceed around the generator set in a counter-clockwise direction in 45° increments. All positions are at 7m (23 ft) from the surface of the generator set and 1.2m (48") from floor level.
2. Sound levels are subject to instrumentation, measurement, installation and manufacturing variability.
3. Sound data with remote-cooled generator sets are based on rated loads without cooling fan noise.
4. Sound levels for aluminum enclosures are approximately 2 dB(A)s higher than listed sound levels for steel enclosures.
5. Sound data for generator set with infinite exhaust do not include exhaust noise.
6. Data is based on full rated load with standard radiator-cooling fan package
7. Sound Pressure Levels are measured per ANSI S1.13 and ANSI S12.18, as applicable.
8. Reference sound pressure is 20 µPa.
9. Sound Power Levels per ISO 3744 and ISO 8528-10, as applicable.
10. Reference power = 1 pw (10^{-12} W)
11. Exhaust Sound Pressure Levels are per ISO 6798, as applicable.
12. Sound Pressure level at different microphone locations and average Sound Pressure level at 7m for F202, F201 and F200 enclosures are based on Insertion loss calculations.
13. Average Sound Pressure level at 7m for F202- Quiet Site II Second Stage enclosure is calculated using overall frequency spectrum data of the insertion loss

2015 EPA Tier 2 Exhaust Emission Compliance Statement 800DQCC Stationary Emergency

60 Hz Diesel Generator Set

Compliance Information:

The engine used in this generator set complies with Tier 2 emissions limit of U.S. EPA New Source Performance Standards for stationary emergency engines under the provisions of 40 CFR 60 Subpart IIII when tested per ISO8178 D2.

Engine Manufacturer:	Cummins Inc
EPA Certificate Number:	FCEXL023.AAB-005
Effective Date:	07/21/2014
Date Issued:	07/21/2014
EPA Engine Family :	FCEXL023.AAB

Engine Information:

Model:	QSK23 / QSX23-G7 NR2	Bore:	6.69 in. (170 mm)
Engine Nameplate HP:	1220	Stroke:	6.69 in. (170 mm)
Type:	4 Cycle, In-line, 6 Cylinder Diesel	Displacement:	1413 cu. in. (23.2 liters)
Aspiration:	Turbocharged and CAC	Compression Ratio:	16.0:1
Emission Control Device:	Engine Design Modification	Exhaust Stack Diameter:	10 in.

Diesel Fuel Emission Limits

D2 Cycle Exhaust Emissions

	Grams per BHP-hr			Grams per kWm-hr		
	NOx + NMHC	CO	PM	NOx + NMHC	CO	PM
Test Results - Diesel Fuel (300-4000 ppm Sulfur)	4.3	0.3	0.10	5.7	0.4	0.13
EPA Emissions Limit	4.8	2.6	0.15	6.4	3.5	0.20
Test Results - CARB Diesel Fuel (<15 ppm Sulfur)	3.9	0.3	0.085	5.2	0.4	0.11
CARB Emissions Limit	4.8	2.6	0.15	6.4	3.5	0.20

The CARB emission values are based on CARB approved calculations for converting EPA (500 ppm) fuel to CARB (15 ppm) fuel.
Test Methods: EPA/CARB Nonroad emissions recorded per 40CFR89 (ref. ISO8178-1) and weighted at load points prescribed in Subpart E, Appendix A for Constant Speed Engines (ref. ISO8178-4, D2)
Diesel Fuel Specifications: Cetane Number: 40-48. Reference: ASTM D975 No. 2-D.
Reference Conditions: Air Inlet Temperature: 25°C (77°F), Fuel Inlet Temperature: 40°C (104°F). Barometric Pressure: 100 kPa (29.53 in Hg), Humidity: 10.7 g/kg (75 grains H2O/lb) of dry air; required for NOx correction, Restrictions: Intake Restriction set to a maximum allowable limit for clean filter; Exhaust Back Pressure set to a maximum allowable limit.

Tests conducted using alternate test methods, instrumentation, fuel or reference conditions can yield different results.
Engine operation with excessive air intake or exhaust restriction beyond published maximum limits, or with improper maintenance, may result in elevated emission levels.

Exhaust Emission Data Sheet
800DQCC
60 Hz Diesel Generator Set
EPA NSPS Stationary Emergency

Engine Information:

Model:	Cummins Inc QSK23-G7 NR2	Bore:	6.69 in. (170 mm)
Type:	4 Cycle, In Line, 6 Cylinder Diesel	Stroke:	6.69 in. (170 mm)
Aspiration:	Turbocharged and CAC	Displacement:	1413 cu. in. (23.1 liters)
Compression Ratio:	16.0:1		
Emission Control Device:	Turbocharged with Charge Air Cooled		

	1/4	1/2	3/4	Full	Full
PERFORMANCE DATA	**Standby**	**Standby**	**Standby**	**Standby**	**Prime**
Engine HP @ Stated Load (1800 RPM)	305	610	915	1183	1085
Fuel Consumption (gal/hr)	16.5	30.3	43.3	53.8	49.5
Exhaust Gas Flow (CFM)	2401	3725	4768	5337	5089
Exhaust Temperature (°F)	649	746	803	861	830
EXHAUST EMISSION DATA					
HC (Total Unburned Hydrocarbons)	0.59	0.27	0.16	0.10	0.12
NOx (Oxides of Nitrogen as NO2)	2.86	3.42	4.45	6.51	5.89
CO (Carbon Monoxide)	0.79	0.27	0.16	0.33	0.28
PM (particular Matter)	0.24	0.06	0.04	0.05	0.05
SO2 (Sulfur Dioxide)	0.12	0.11	0.10	0.10	0.10
Smoke (Bosch)	0.86	0.41	0.32	0.40	0.37
					All values are Grams per HP-Hour

TEST CONDITIONS

Data was recorded during steady-state rated engine speed (± 25 RPM) with full load (±2%). Pressures, temperatures, and emission rates were stabilized.

Fuel Specification:	46.5 Cetane Number, 0.035 Wt.% Sulfur; Reference ISO8178-5, 40CFR86.1313-98 Type 2-D and ASTM D975 No. 2-D.
Fuel Temperature:	99 ± 9 °F (at fuel pump inlet)
Intake Air Temperature:	77 ± 9 °F
Barometric Pressure:	29.6 ± 1 in. Hg
Humidity:	NOx measurement corrected to 75 grains H2O/lb dry air
Reference Standard:	ISO 8178

The NOx, HC, CO and PM emission data tabulated here were taken from a single engine under the test conditions shown above. Data for the other components are estimated. These data are subjected to instrumentation and engine-to-engine variability. Field emission test data are not guaranteed to these levels. Actual field test results may vary due to test site conditions, installation, fuel specification, test procedures and instrumentation. Engine operation with excessive air intake or exhaust restriction beyond published maximum limits, or with improper maintenance, may results in elevated emission levels.

REL NO	LTR	NO	REVISION	ZONE	DWN	CKD	APVD	DATE
ECO-100339	B	1	SEE ECO FOR DETAILS	-	SMM	MT	MT	06-11-08

800A Breakers on each side

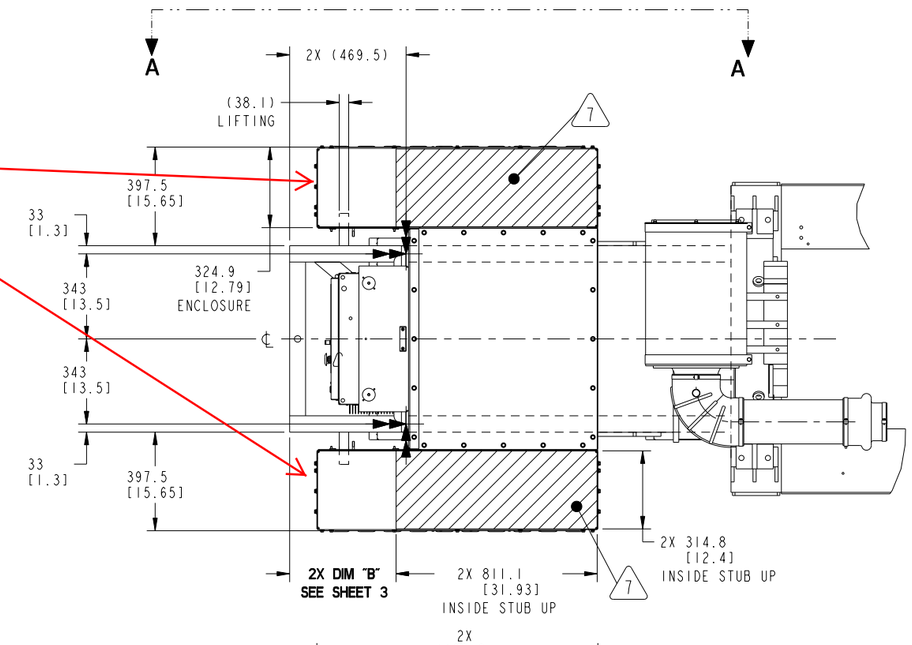

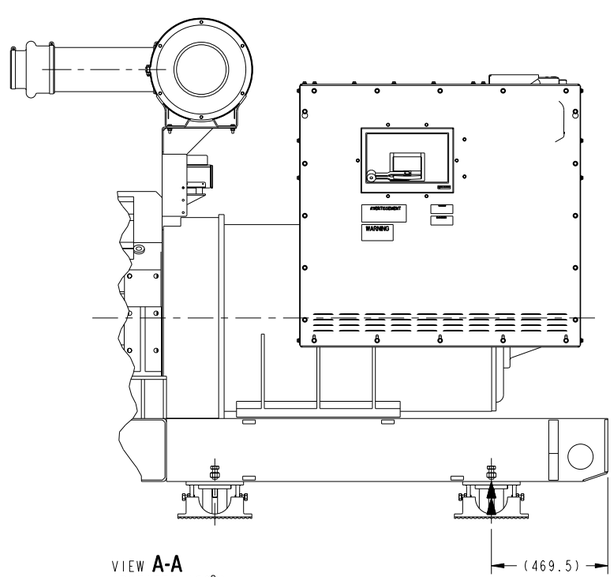

VIEW **A-A**
(ROTATED 180°)

LEFT SIDE ENTRY 11

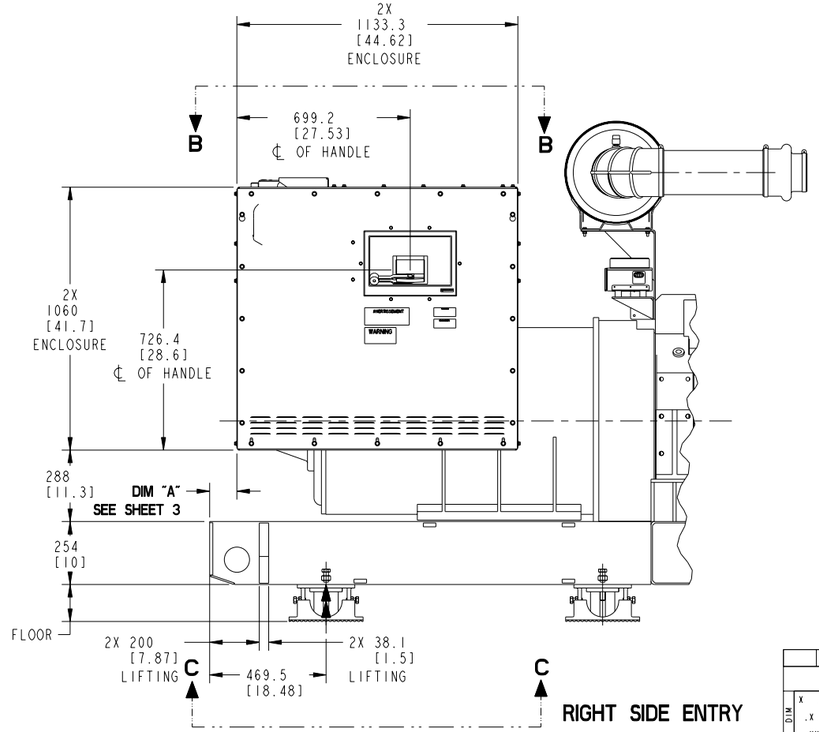

RIGHT SIDE ENTRY

NOTE:

1. DIMENSIONS SHOWN IN [ ] ARE IN INCHES.
2. COMMON REFERENCE POINT ON GENSET SKID (⟶). POINTS TO ANCHORING HOLE ON SKID. SEE GENSET_OUTLINE (FOUNDATION) FOR DETAILS.
3. LISTED TORQUE VALUES ARE FOR MAXIMUM CONDUCTOR SIZES ACCOMMODATED. CONSULT UL 486 TABLE 7-4, 7-5 AND 7-6 FOR SMALLER CONDUCTOR SIZES.
4. ALL ITEMS SHOWN IN ILLUSTRATION ARE FOR REFERENCE ONLY.
5. ELECTRICAL CONDUITS MUST:
   - PROVIDE FLEXIBLE CONNECTION (USING FLEXIBLE CONDUIT AND CABLES). -LFMC
   - INSTALLED IN A WAY THAT IT WILL ABSORB OR REDUCE VIBRATION CONDITIONS, FOR EXAMPLE: ADD OFF-SET BENDS, BETWEEN THE MOUNTING SURFACE OF THE CIRCUIT BREAKER ENCLOSURE AND THE STUB AREA ORIGINATING IN CONCRETE OR THE TYPE OF BASE FLOORING.
6. FLEXIBLE CONDUITS MUST ALLOW FOR GENERATOR SET MOVEMENT AS MUCH AS ±50 [2] IN THE VERTICAL DIRECTION.
7. AREA SHOWN INDICATES APPROXIMATE OFFSET PLACEMENT OF THE ELECTRICAL FLEXIBLE CONDUIT STUB-UP AREA ORIGINATING IN CONCRETE OR OTHER TYPE OF BASE FLOORING RELATIVE TO CIRCUIT BREAKER LOCATION WITHIN ENCLOSURE TO PROVIDE VIBRATION PROTECTION.
8. WIRE-CONDUIT COMBINATIONS MEET NEC AND CEC. TO USE OTHER COMBINATIONS, REFER TO APPLICABLE CODES TO ENSURE THAT WIRE AMPACITY, BEND SPACE AND GUTTER SPACE MEET THE REQUIREMENTS.
9. SHUNT TRIP UNITS CAN BE OPERATED AT 75% OF NOMINAL VOLTAGE AND WILL ACCEPT MOMENTARY OR CONTINUOUS APPLIED VOLTAGE.
10. SHUNT TRIP UNITS CAN BE OPERATED AT 70% TO 100% OF NOMINAL VOLTAGE AND WILL ACCEPT MOMENTARY OR CONTINUOUS APPLIED VOLTAGE.
11. ALL DIMENSIONS SHOWN FOR RIGHT SIDE ENTRY ALSO APPLY TO LEFT SIDE ENTRY IN MIRROR ORIENTATION.
12. ALTERNATOR MODEL HC634G & R-FRAME CIRCUIT BREAKER ARE BEING SHOWN FOR DRAWING SIMPLICITY.
13. "NS" SHUNT TRIP HAS NO INTERNAL CONTACTS, IT MUST BE USED IN CONJUNCTION WITH AUXILIARY CONTACTS TO ACCEPT CONTINUOUS APPLIED VOLTAGE. IT CAN OPERATE AT 75% OF NOMINAL VOLTAGE.
14. 800 AMP BREAKER: A LUG ACCEPTING (2) 3/0-600 kcmil CONDUCTORS IS AVAILABLE THRU ACCESSORIES. PGA PART NUMBER 0332-4278.
15. 1200 AMP BREAKER: A LUG ACCEPTING (3) 3/0-600 kcmil CONDUCTORS IS AVAILABLE THRU ACCESSORIES. PGA PART NUMBER 0332-4279.

QTY	ITEM	PART NO	DESCRIPTION OR MATERIAL

UNLESS OTHERWISE SPECIFIED, ALL DIMENSIONS ARE IN MILLIMETERS

DIM		HOLE
X	± 1	0.00- 4.99 +0.15/-0.08
.X	± 0.8	5.00- 9.99 +0.20/-0.10
.XX	± 0.38	10.00-17.49 +0.25/-0.13
		17.50-24.99 +0.30/-0.13

ANG TOL: ± 1.0° SCALE: 3/32

SIM TO .

DO NOT SCALE PRINT

- CONFIDENTIAL -
PROPERTY OF CUMMINS POWER GENERATION GROUP

FOR INTERPRETATION OF DIMENSIONING AND TOLERANCING, SEE ASME Y14.5M-1994

FIRST USED ON DOCA,CB,CC

DWN I_LANDRUS
CKD L_NAVARRETE
APVD L_NAVARRETE
DATE 07-27-06

SITE CODE PGF

CUMMINS POWER GENERATION
1400 73RD AVENUE NE, MINNEAPOLIS, MN 55432

CIRCUIT BRKR OUTLINE
(23 LITER)

DWG SIZE D | 0500_4540 | SHEET 1 of 3 | DWG REV B

Pro/ENGINEER

REL NO	LTR	NO	REVISION	ZONE	DWN	CKD	APVD	DATE
ECO-100339	B	1	SEE ECO FOR DETAILS	-	SMM	MT	MT	06-11-08

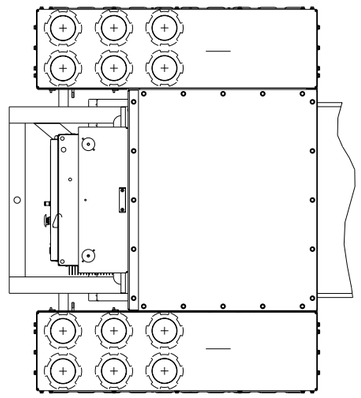

VIEW B-B
TOP ENTRANCE
SCALE 3/32

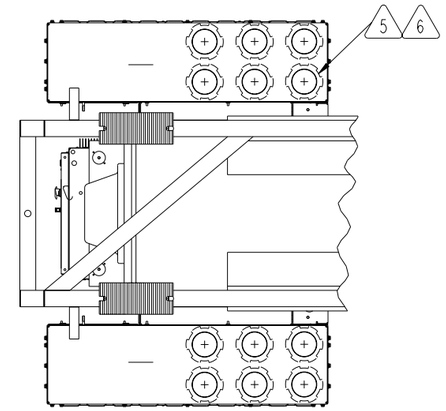

VIEW C-C
BOTTOM ENTRANCE
SCALE 3/32

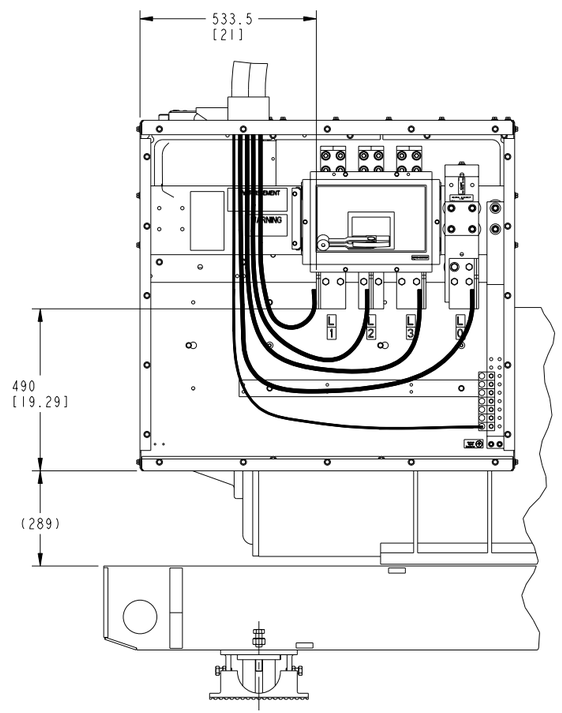

RIGHT SIDE
TOP ENTRY ROUTING EXAMPLE
SCALE 1/8

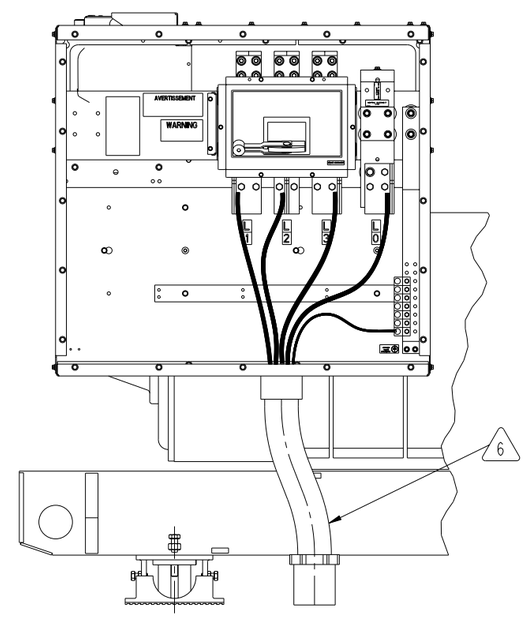

RIGHT SIDE
BOTTOM ENTRY ROUTING EXAMPLE
SCALE 1/8

QTY	ITEM	PART NO	DESCRIPTION OR MATERIAL

UNLESS OTHERWISE SPECIFIED, ALL DIMENSIONS ARE IN MILLIMETERS

DIM	HOLE
X ± 1	0.00- 4.99 +0.15/-0.08
.X ± 0.8	5.00- 9.99 +0.20/-0.10
.XX± 0.38	10.00-17.49 +0.25/-0.13
	17.50-24.99 +0.30/-0.13

ANG TOL: ± 1.0° SCALE: 3/32

SIM TO .
DO NOT SCALE PRINT

- CONFIDENTIAL -
PROPERTY OF CUMMINS POWER GENERATION GROUP

DWN I_LANDRUS
CKD L_NAVARRETE
APVD L_NAVARRETE
DATE 07-27-06

FOR INTERPRETATION OF DIMENSIONING AND TOLERANCING, SEE ASME Y14.5M-1994

FIRST USED ON DOCA,CB,CC

SITE CODE PGF

CUMMINS POWER GENERATION
1400 73RD AVENUE NE, MINNEAPOLIS, MN 55432

CIRCUIT BRKR OUTLINE
(23 LITER)

DWG SIZE D | 0500_4540 | SHEET 2 of 3 | DWG REV B

Pro/ENGINEER

REL NO	LTR	NO	REVISION	ZONE	DWN	CKD	APVD	DATE
ECO-100339	B	1	SEE ECO FOR DETAILS	-	SMM	MT	MT	06-11-08

TABLE 1

UL/IEC LUGS					ACCESSORY SPECIFICATIONS			
LUG	FRAME	MAX AMPS	WIRE RANGE COPPER	DIM D ±25 [1.0]	ACCESSORY DESCRIPTION	CONTACT RATING	INRUSH	CONNECTION TYPE
	SQUARE D NSJ	400A 3 OR 4 POLE	#2-600 KCMIL	554 [21.8]	24 VDC SHUNT TRIP	----------	10A (10)	COMPRESSION TERMINALS #20-16 AWG OR SMALLER TORQUE: 10 LB-IN
	SQUARE D NSJ W/STR23SP TRIP UNIT	600A 3-POLE	2/0-350 KCMIL	554 [21.8]	24 VDC SHUNT TRIP	----------	10A (10)	COMPRESSION TERMINALS #20-16 AWG OR SMALLER TORQUE: 10 LB-IN
					1 EA. FORM C 1 AUX CONTACT + 1 TRIP ALARM	6A AT 240 VAC, 6A AT 480 VAC, 3A AT 600 VAC, 2.5A AT 48 VDC, 0.8A AT 125VDC, 0.3A AT 250 VDC	----	
(14)	SQUARE D P 800 W/MICROLOGIC 3.0 TRIP UNIT	800A 3-POLE	3/0-500 KCMIL	599 [23.5]	24 VDC SHUNT TRIP	----------	200VA (10)	COMPRESSION TERMINALS FOR 1 OR 2 #18-14 AWG. TORQUE: 10 LB-IN
					1 EA. FORM C 1 AUX CONTACT + 1 TRIP ALARM	6A AT 240 VAC, 6A AT 480 VAC, 3A AT 600 VAC, 2.5A AT 48 VDC, 0.8A AT 125VDC, 0.3A AT 250 VDC	----	COMPRESSION TERMINALS FOR 1 OR 2 #18-16 AWG. TORQUE: 10 LB-IN
(15)	SQUARE D P 1200 W/MICROLOGIC 3.0 TRIP UNIT	1200A 3-POLE	3/0-500 KCMIL	556 [21.8]	24 VDC SHUNT TRIP	----------	200VA (10)	COMPRESSION TERMINALS FOR 1 OR 2 #18-14 AWG. TORQUE: 10 LB-IN
					1 EA. FORM C 1 AUX CONTACT + 1 TRIP ALARM	6A AT 240 VAC, 6A AT 480 VAC, 3A AT 600 VAC, 2.5A AT 48 VDC, 0.8A AT 125VDC, 0.3A AT 250 VDC	----	COMPRESSION TERMINALS FOR 1 OR 2 #18-16 AWG. TORQUE: 10 LB-IN
	SQUARE D R 2500/2000/1600 3-POLE 1600-2500 AMP BUS BARS STANDARD W/MICROLOGIC 3.0 TRIP UNIT	NEMA HOLE PATTERN		490 [19]	24 VDC SHUNT TRIP	----------	200VA (10)	COMPRESSION TERMINALS FOR 1 OR 2 #18-14 AWG. TORQUE: 10 LB-IN
					1 EA. FORM C 4 AUX CONTACT + 1 TRIP ALARM	6A AT 240 VAC, 6A AT 480 VAC, 3A AT 600 VAC, 2.5A AT 48 VDC, 0.8A AT 125VDC, 0.3A AT 250 VDC	----	COMPRESSION TERMINALS FOR 1 OR 2 #18-16 AWG. TORQUE: 10 LB-IN
	(3) R 2500/2000/1600 W/OPTIONAL LUG 1600-2500 AMP BREAKERS TORQUE 375 IN LBS [42 Nm]	#2-600 KCMIL		490 [19]	24 VDC SHUNT TRIP	----------	200VA (10)	COMPRESSION TERMINALS FOR 1 OR 2 #18-14 AWG. TORQUE: 10 LB-IN
					1 EA. FORM C 4 AUX CONTACT + 1 TRIP ALARM	6A AT 240 VAC, 6A AT 480 VAC, 3A AT 600 VAC, 2.5A AT 48 VDC, 0.8A AT 125VDC, 0.3A AT 250 VDC	----	COMPRESSION TERMINALS FOR 1 OR 2 #18-16 AWG. TORQUE: 10 LB-IN

TABLE 2

TYPICAL CONDUIT AND WIRE SIZE BASED ON NEC 2008, ARTICLE 310.15 AT 75C TEMPERATURE RATED CONDUCTOR AT 30C AMBIENT AND ANNEX C (LIQUID TIGHT FLEXIBLE METAL CONDUIT - LFMC)

(8)

MAX BRKR AMPS	WIRE (COPPER)		CABLE AMPACITY	TOTAL NUMBER OF CONDUITS	
	QTY	SIZE		QTY	SIZE (IN INCHES)
2500	6	600 KCMIL	420	6	4
2000	5	600 KCMIL	420	5	4
1600	5	600 KCMIL	420	5	4
1200	3	500 KCMIL	385	3	3
1000	3	400 KCMIL	335	3	3
800	2	300 KCMIL	285	2	3
630	2	350 KCMIL	310	2	3
600	2	350 KCMIL	310	2	3
400	1	600 KCMIL	420	1	4
250	1	250 KCMIL	255	1	2 1/2
100	1	2 KCMIL	115	1	2

TYPICAL CONDUIT AND WIRE SIZE BASED ON NEC 2008, ARTICLE 310.15 AND TABLE 310-16 AT 75C TEMPERATURE RATED CONDUCTOR AT 40C AMBIENT AND ANNEX C (LIQUID TIGHT FLEXIBLE METAL CONDUIT - LFMC)

(8)

MAX BRKR AMPS	WIRE (COPPER)		CABLE AMPACITY	TOTAL NUMBER OF CONDUITS	
	QTY	SIZE		QTY	SIZE (IN INCHES)
2500	6	750 KCMIL	418	6	4
2000	5	700 KCMIL	405	5	4
1600	4	700 KCMIL	405	4	4
1000	3	500 KCMIL	334	3	3 1/2
800	3	350 KCMIL	273	3	3

TABLE 3

GENSET MODEL	ALTERNATOR MODEL	DIM "A"	DIM "B"
❑ DQCA ❑ DQCB ❑ DQCC	❑ HC634G	109.7 [4.32]	431.9 [17.0]
	❑ HC634H	109.7 [4.32]	431.9 [17.0]
	❑ HC634J	109.7 [4.32]	431.9 [17.0]
	❑ HC634K	8.7 [.34]	330.9 [13.03]

QTY	ITEM	PART NO	DESCRIPTION OR MATERIAL

UNLESS OTHERWISE SPECIFIED, ALL DIMENSIONS ARE IN MILLIMETERS

DIM: X ±1; .X ±0.8; .XX± 0.38

HOLE: 0.00- 4.99 +0.15/-0.08; 5.00- 9.99 +0.20/-0.10; 10.00-17.49 +0.25/-0.13; 17.50-24.99 +0.30/-0.13

ANG TOL: ± 1.0° SCALE: 3/32

SIM TO

DO NOT SCALE PRINT

- CONFIDENTIAL - PROPERTY OF CUMMINS POWER GENERATION GROUP

FOR INTERPRETATION OF DIMENSIONING AND TOLERANCING, SEE ASME Y14.5M-1994

FIRST USED ON DOCA,CB,CC

DWN I_LANDRUS
CKD L_NAVARRETE
APVD L_NAVARRETE
DATE 07-27-06

SITE CODE PGF

CUMMINS POWER GENERATION
1400 73RD AVENUE NE, MINNEAPOLIS, MN 55432

CIRCUIT BRKR OUTLINE
(23 LITER)

DWG SIZE D | 0500_4540 | SHEET 3 of 3 | DWG REV B

Pro/ENGINEER

Pro/ENGINEER

A034L228

FEATURE CODE F202,F205 OPTIONAL FEATURE CODE K074,K102

REL NO	LTR	NO	REVISION	DWN	CKD	APVD	DATE
ECO-133125	C	1	ADD DQPAA,DQPAB INFO TO TABULATION	CJF	KK	K KISHORE	12MAR13
		2	SEE SHEET 2	CJF	KK	K KISHORE	12MAR13
		3	SEE SHEET 2	CJF	KK	K KISHORE	12MAR13
		4	SEE SHEET 2	CJF	KK	K KISHORE	12MAR13
		5	SEE SHEET 2	CJF	KK	K KISHORE	12MAR13
		6	TITLE "OUTLINE,ENCLOSURE" WAS "ENCLOSURE_OUTLINE"	CJF	KK	K KISHORE	12MAR13

TABULATION

MODEL	GENERATOR	KW	STEEL ENCLOSURE WEIGHT KG (LBS) ±5%	ALUMINUM ENCLOSURE WEIGHT KG (LBS) ±5%	CG_DIM "A"	CG_DIM "B"	CG_DIM "C"	DIM_D ± 75 [3]
DQCA,DQCB DQCC	HC6G		12339 [27202]	10884 [23994]	2038 [80.2]	1244.7 [49]	846 [33.3]	1529 [60]
	HC6H		12489 [27533]	11034 [24325]	2021 [79.6]		845 [33.3]	
	HC6J		12644 [27875]	11189 [24667]	2019 [79.5]		844 [33.2]	
	HC6K		12917 [28477]	11462 [25269]	2031 [80]		842 [33.1]	
DFGB,DFGE	HC5E		11373 [25074]	9918 [21866]	2199 [86.6]		1093 [43]	1490 [59]
	HC5F		11555 [25474]	10097 [22260]	2126 [83.7]		1057 [41.6]	
	HC6G		12008 [26474]	10553 [23266]	2080 [81.9]		1054 [41.5]	1599 [63]
	HC6H		12076 [26624]	10621 [23416]	2052 [80.8]		1054 [41.5]	
	HC6J		12371 [27274]	10916 [24066]	2020 [79.5]		1053 [41.5]	
DFHA,DFHB DFHC,DFHD DQFAA,DQFAB DQFAC,DQFAD	HC6G		12634 [27853]	11179 [24645]	2065 [81.3]		794 [31.3]	1570 [62]
	HC6H		12872 [28377]	11417 [25169]	2041 [80.4]		791 [31.1]	
	HC6J		13095 [28869]	11640 [25661]	2017 [79.4]		788 [31]	
	HC6K		13170 [29034]	11715 [25826]	2009 [79.1]		787 [31]	
	P7B		13256 [29224]	11801 [26016]	1960 [77.2]		786 [30.9]	1698 [67]
	P7C		13514 [29794]	12059 [26586]	1945 [76.6]		784 [30.9]	
DQPAA,DQPAB	HC5F		11101 [24474]	9646 [21266]	2043 [80.4]		827 [32.6]	1438 [56.6]
	HC6G		11173 [24632]	9718 [21425]	2059 [81.1]		826 [32.5]	
	HC6H		11411 [25157]	9956 [21949]	2081 [81.9]		823 [32.4]	

*** WEIGHT & CG'S ARE SHOWN WITH F202 STEEL ENCLOSURE, AND STANDARD WET GENSET. ADDITION OF OTHER FEATURES MAY CHANGE THE WEIGHT.

NOTES:

1. DIMENSIONS SHOWN IN [ ] ARE INCHES.
2. FOUNDATION REFERENCE POINT (—⊂⊃—). SEE FOUNDATION DRAWING FOR DETAILS.

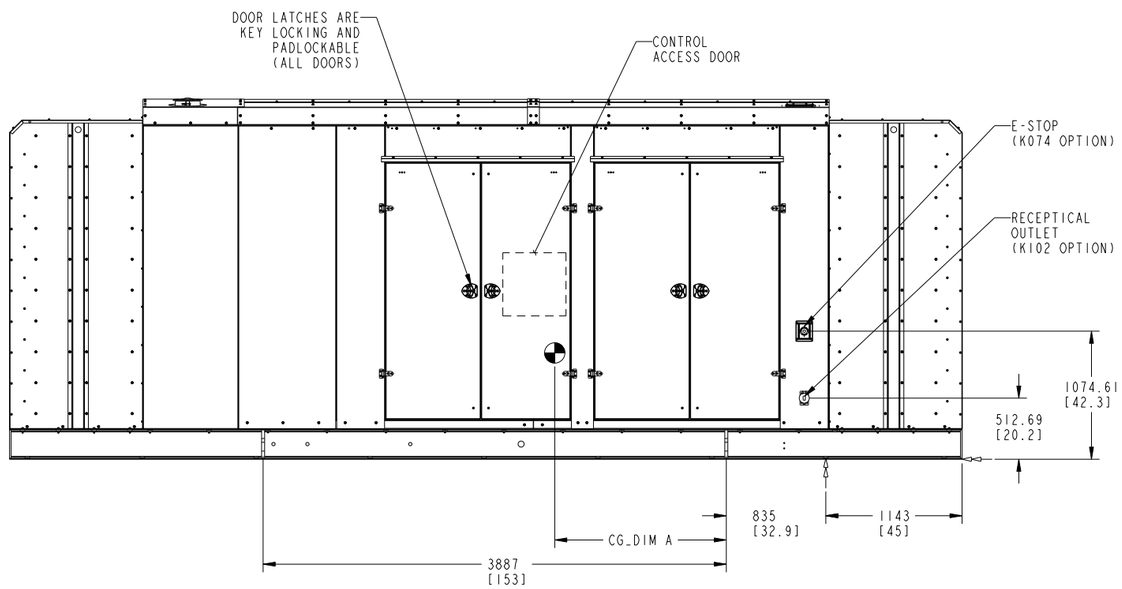

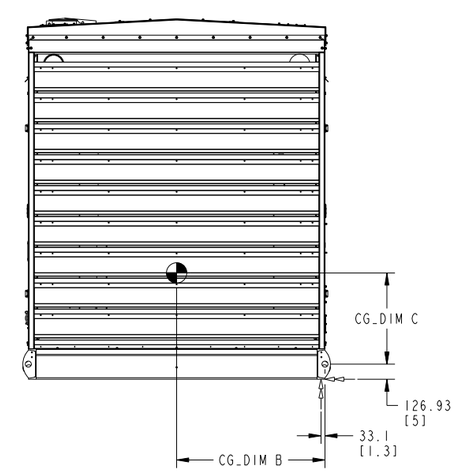

UNLESS OTHERWISE SPECIFIED, ALL DIMENSIONS ARE IN MILLIMETERS

DIM: X ± 3; .X ± 0.8; .XX± 0.38

HOLE: 0.00- 4.99 +0.15/-0.08; 5.00- 9.99 +0.20/-0.10; 10.00-17.49 +0.25/-0.13; 17.50-24.99 +0.30/-0.13

ANG TOL: ± 1.0°

SCALE: 3/64

SIM TO 0500-4147

DO NOT SCALE PRINT

- CONFIDENTIAL - PROPERTY OF CUMMINS POWER GENERATION GROUP

DWN D_CARPENTER

CKD Z_MOGES

APVD Z_MOGES

DATE 23JUL10

FOR INTERPRETATION OF DIMENSIONS AND TOLERANCING, SEE ASME Y14.5M-1994

FIRST USED ON DQCA

SITE CODE PGF

CUMMINS POWER GENERATION

OUTLINE,ENCLOSURE (LEVEL 2)

SWC SIZE D | A034L228 | SHEET 1 of 2 | DWG REV C

Drawing Name: A034L229 Revision: C
Part Name: A034L228 Revision: C
Sheet 1 of 3

Pro/ENGINEER

A034L228

REL NO	LTR	NO	REVISION	DWN	CKD	APVD	DATE
ECO-133125	C	2	EXHAUST---DQPAB WAS EXHAUST---DQMAA	CJF	KK	K KISHORE	12MAR13
		3	RMV DQMAA FROM EXHAUST---DQPAB	CJF	KK	K KISHORE	12MAR13
		4	EXHAUST---DQFAD WAS EXHAUST---DQCC	CJF	KK	K KISHORE	12MAR13
		5	ADD DIMS 2X 1495.3 [59], 307.3 [12], 325.4 [13]	CJF	KK	K KISHORE	12MAR13

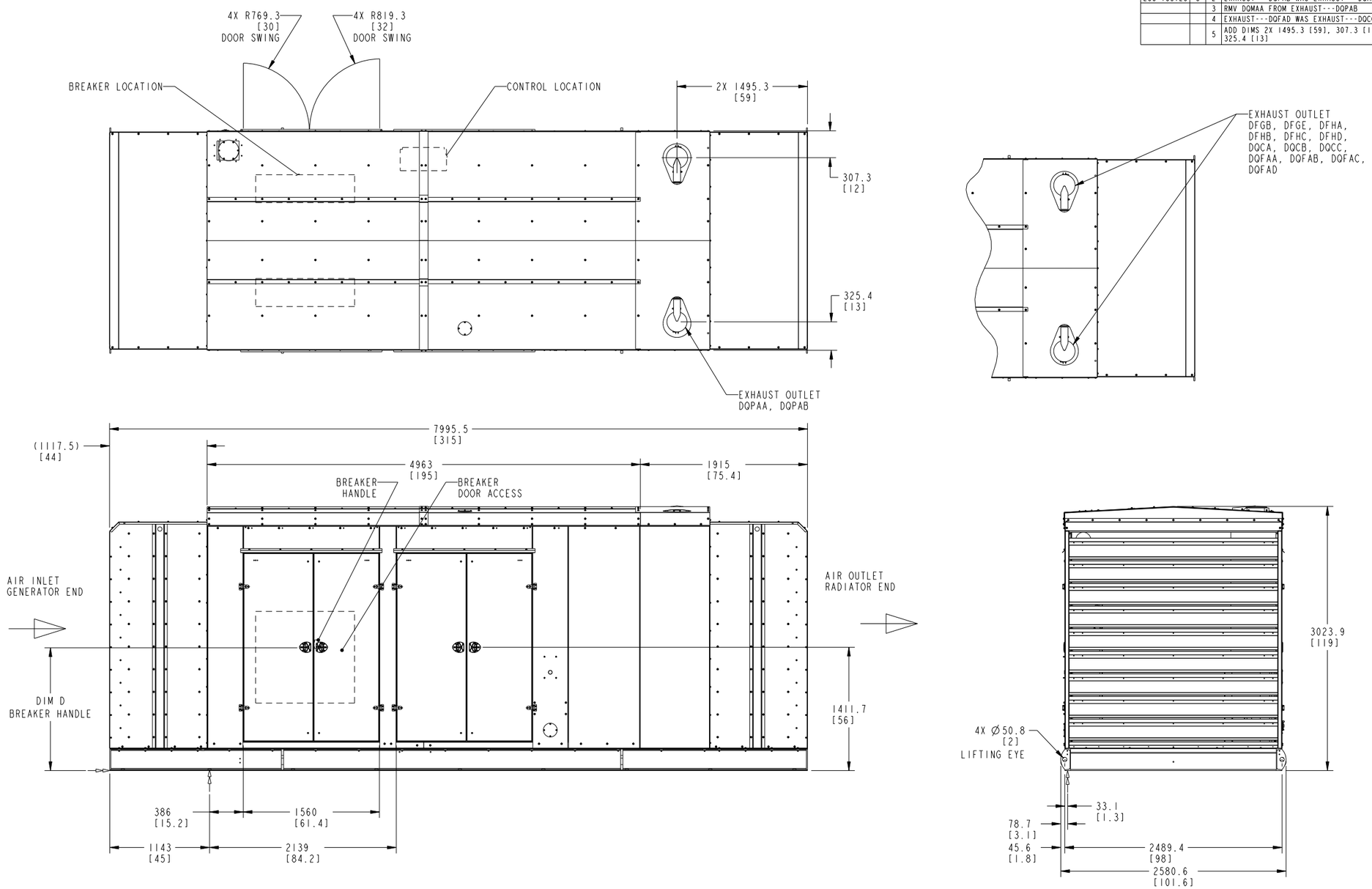

UNLESS OTHERWISE SPECIFIED, ALL DIMENSIONS ARE IN MILLIMETERS							
DIM	X ± 3	HOLE	0.00- 4.99 +0.15/-0.08	SIM TO 0500-4147	DWN D_CARPENTER		CUMMINS POWER GENERATION
	.X ± 0.8		5.00- 9.99 +0.20/-0.10	DO NOT SCALE PRINT	CKD Z_MOGES		OUTLINE, ENCLOSURE
	.XX± 0.38		10.00-17.49 +0.25/-0.13		APVD Z_MOGES		(LEVEL 2)
			17.50-24.99 +0.30/-0.13	- CONFIDENTIAL - PROPERTY OF CUMMINS POWER GENERATION GROUP	DATE 23JUL10	SITE CODE	
ANG TOL: ± 1.0°			SCALE: 3/64	FOR INTERPRETATION OF DIMENSIONING AND TOLERANCING, SEE ASME Y14.5M-1994	FIRST USED ON DQCA	PGF	DWG SIZE D A034L228 SHEET 2 OF 2 DWG REV C

Drawing Name: A034L229 Revision: C
Part Name: A034L228 Revision: C
Sheet 2 of 3

PTC® Creo® Parametric

REL NO	LTR	NO	REVISION	DRN	CKD	APVD	DATE
ECO-152906	E	5	ZN A-2: ADD DIM 1920 [76]	C.JF	KK	K KISHORE	29MAY15

FEATURE CODE C249, C205, C250, C251 WITH F202 OR F205

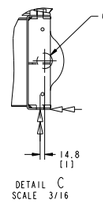

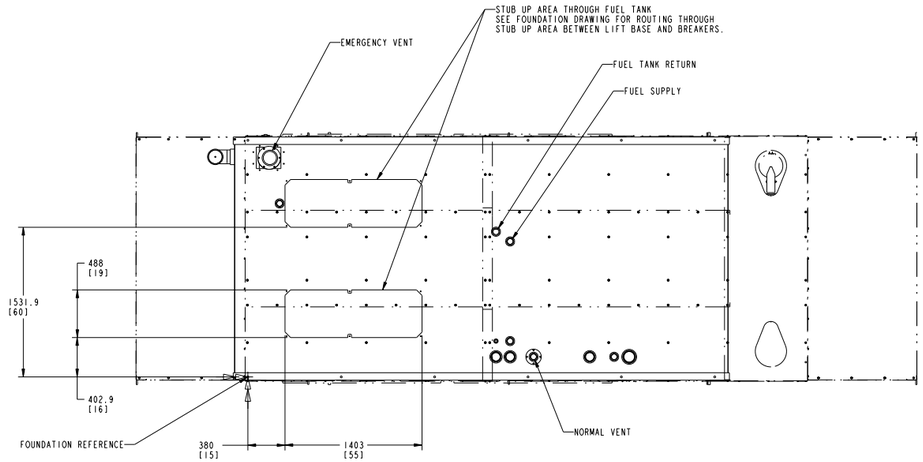

NOTES:

1. DIMENSION SHOWN IN [ ] ARE IN INCHES.
2. SEE FOUNDATION DRAWING FOR REFERENCE POINT LOCATION (—▷◁—) (SHEET 4).
3. SEE SHEETS 5 & 6 FOR WEIGHT & CG INFORMATION.
4. TANK CHANNEL SUPPORT BRACKETS (0319-5654) ARE OPTIONAL. IF CUSTOMER REQUIRES THE BRACKETS THEY ARE SHIPPED SEPARATELY. NOT SHOWN ON DRAWING.

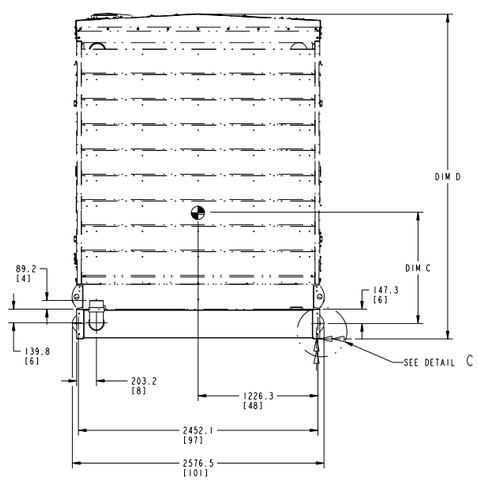

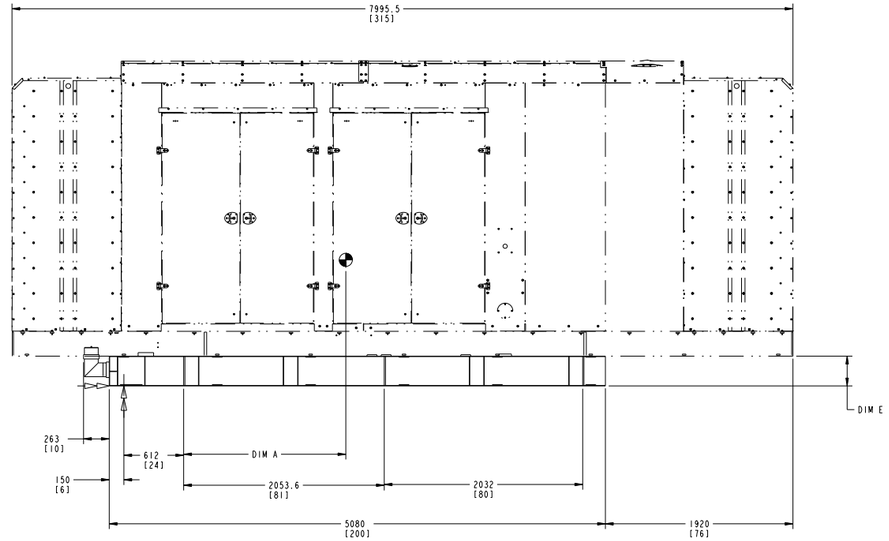

UNLESS OTHERWISE SPECIFIED, ALL DIMENSIONS ARE IN MILLIMETERS	SH M 0500-4166	DRN M_JOHNSON	CUMMINS POWER GENERATION
DIM TOL: X ±1; .X ±0.8; .XX ±0.38 — FRA TOL: 0.00-4.99 +0.15/-0.08; 5.00-9.99 +0.20/-0.10; 10.00-17.49 +0.25/-0.13; 17.50-24.99 +0.30/-0.13	DO NOT SCALE PRINT	CKD Z_MOGES	OUTLINE,FUEL SYSTEM (TANKS)
ANG TOL: ± 1.0° SCALE: 1/1	CONFIDENTIAL — PROPERTY OF CUMMINS POWER GENERATION GROUP	APVD Z_MOGES	
		DATE 03FEB11	SITE CODE PGF — REV E — A035J956 — SHEET 3 OF 5 — REV E
	CAD INTERPRETATION PER ASME Y14.5M-1994 ISO/IEC 11714-1	FIRST USED IN DFHD	

Drawing Name: A035J957 Revision: E
Part Name: A035J956 Revision: E
Sheet 3 of 6

PTC® Creo® Parametric

REL NO	LTR	NO	REVISION	DRN	CKD	APVD	DATE
ECO-152906	E	--	-----	CJF	KK	K KISHORE	29MAY15

NOTE:

1. DIMENSIONS IN [ ] ARE IN INCHES.
2. FUEL TANK HAS A FLANGE THICKNESS OF 6.4mm [.25 INCHES] ALLOW EXTRA LENGTH ON HARDWARE FOR UNEVENNESS OF MOUNTING SURFACE. (MOUNTING DIMENSIONS PERTAIN TO ALL FUEL TANKS)
3. LIFTING BASE OR FUEL TANK PERIMETER IS SHOWN. FOUNDATION SHOULD BE EXTENDED BEYOND THIS PERIMETER. SEE (T030) APPLICATION MANUAL.
4. HIDDEN LINES REPRESENT LIFT BASE CROSSMEMBERS.
5. FOR IBC/OSHPD INSTALLATIONS REFER SEISMIC REQUIREMENT INSTRUCTIONS A045K403. FOR NON SEISMIC INSTALLATION SIZE AN APPROPRIATE FOUNDATION BOLT FOR 24mm TANK MOUNTING HOLE.

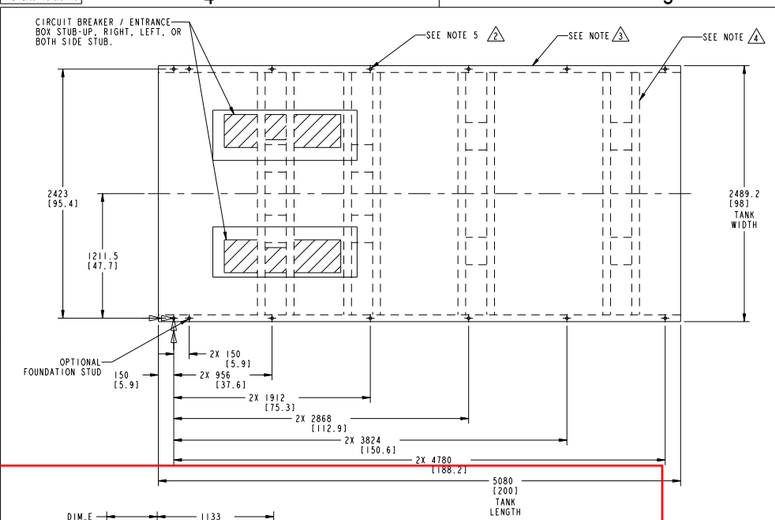

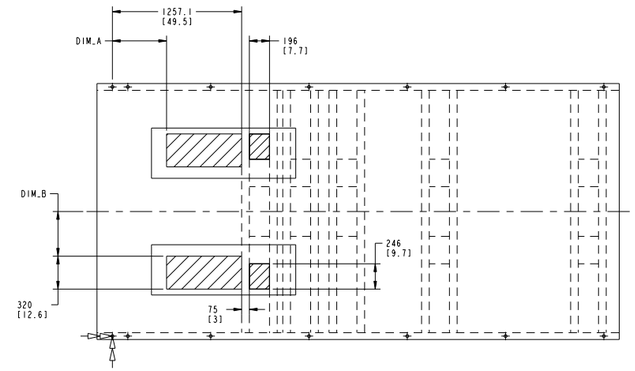

TABULATION			
GENSET	GENERATOR	DIM_A	DIM_B
DQFAA,DQFAB DQFAC,DQFAD	HC6G/H/J	527 [20.7]	434.5 [17.1]
	HC6K	425 [16.7]	
	P7B/C	444 [17.5]	448.7 [17.7]

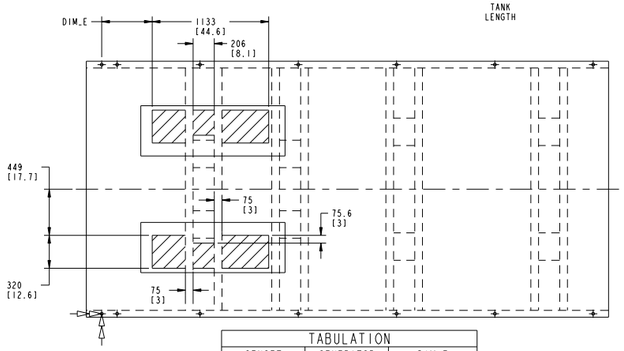

TABULATION		
GENSET	GENERATOR	DIM_E
DOCA,DOCB DOCC	HC6G/H/J	491.3 [19.3]
	HC6K	391.3 [15.4]

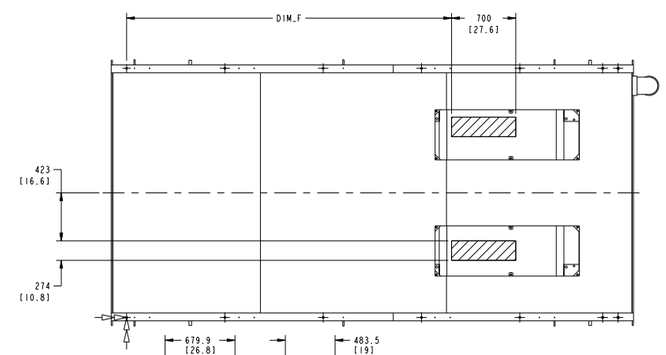

TABULATION		
GENSET	GENERATOR	DIM_F
DOMAA	HC5D, E & ALL HC6	1062 [41.8]
	HC5F	987 [38.8]

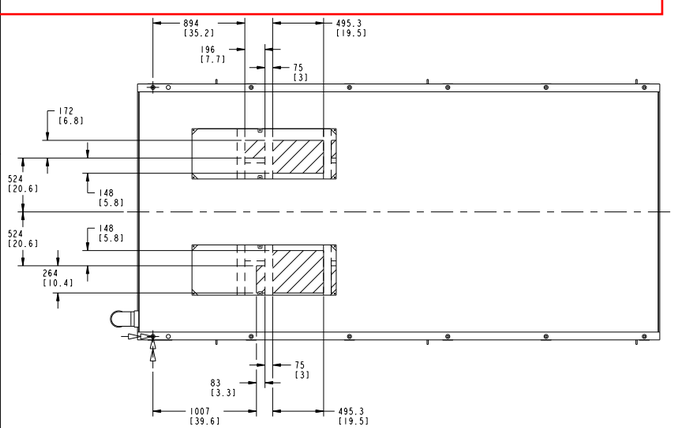

TABULATION	
GENSET	GENERATOR
DOPAA,DOPAB	HC5F

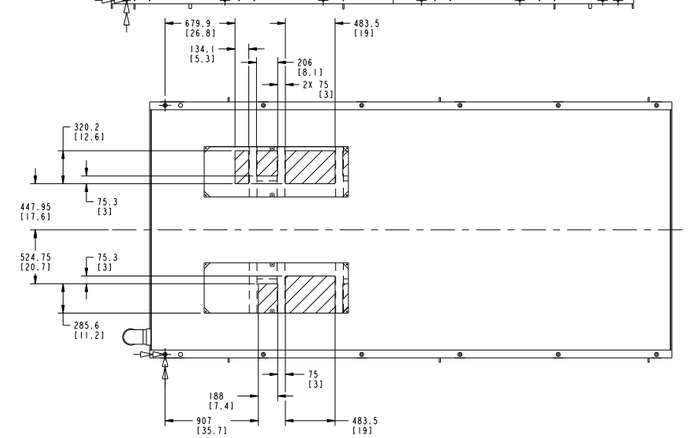

TABULATION	
GENSET	GENERATOR
DOPAA,DOPAB	HC6G,HC6H

UNLESS OTHERWISE SPECIFIED, ALL DIMENSIONS ARE IN MILLIMETERS

X ±1	0.00- 4.99 +0.15/-0.00	
.X ±0.4	5.00- 9.99 +0.20/-0.10	
.XX±0.36	10.00-17.49 +0.25/-0.13	
	17.50-24.99 +0.30/-0.13	

ANG TOL: ± 1.0° SCALE: 1/1

DWG № D500-4166 — DO NOT SCALE PRINT

CONFIDENTIAL — PROPERTY OF CUMMINS POWER GENERATION GROUP

DRN M.JOHNSON
CKD Z.MOGES
APVD Z.MOGES
DATE 03FEB11

SIZE FOR INTERPRETATION OF DIMENSIONS AND TOLERANCES REFER TO DRAWING FORMAT SIZE F12-24-1164 — DWF HRD-B DFHD

CUMMINS POWER GENERATION

OUTLINE,FUEL SYSTEM (TANKS)

SITE CODE PGF — REV E — A035J956 — SHEET 4 of 5 — REV E

Drawing Name: A035J957 Revision: E
Part Name: A035J956 Revision: E
Sheet 4 of 6

PTC® Creo® Parametric

REL NO	LTR	NO	REVISION	BY	CKD	APVD	DATE
ECO-152906	E	--	-----	CJF	KK	K KISHORE	29MAY15

TABULATION

FUEL TANK WITH WEATHER ENCLOSURE FEATURE CODE F200 OR F203

FUEL TANK FEATURE CODE	FUEL TANK SIZE/WEIGHT/ DIM_E	MODEL	GENERATOR	WEIGHT KG [LBS]	CG_DIM "A"	CG_DIM "C"	DIM_D
C249	200 GALLON 1380 [3040] 254 [10]	DQCA,DQCB DQCC	HC6G	1068.9 [235.66]	1994 [78.5]	792 [31.2]	3289 [129]
			HC6H	1084.0 [238.97]	1976 [77.8]	793 [31.2]	
			HC6J	1099.4 [242.38]	1958 [77.1]	795 [31.3]	
			HC6K	1126.7 [248.40]	1928 [75.9]	797 [31.4]	
		DQFAA,DQFAB DQFAC,DQFAD	HC6G	1121.9 [247.33]	2023 [79.7]	840 [33.1]	
			HC6H	1145.6 [252.57]	2001 [78.8]	843 [33.2]	
			HC6J	1168.0 [257.49]	1980 [77.9]	845 [33.3]	
			HC6K	1175.4 [259.14]	1972 [77.6]	845 [33.3]	
			P7B	1184.1 [261.04]	1951 [76.8]	846 [33.3]	
			P7C	1223.5 [269.74]	1929 [76]	850 [33.4]	
		DQMAA	HC5D	868.0 [191.37]	1872 [73.7]	787 [31.0]	
			HC5E	883.1 [194.68]	1852 [72.9]	785 [30.9]	
			HC5F	897.1 [197.77]	1829 [72.0]	785 [30.9]	
			HC6G	903.1 [199.09]	1811 [71.3]	792 [31.2]	
			HC6H	926.9 [204.34]	1780 [70.1]	790 [31.1]	
		DQPAA,DQPAB	HC5F	1008.3 [222.27]	2134 [84.0]	1100 [43.3]	
			HC6G	1015.5 [223.86]	2150 [84.6]	1099 [43.2]	
			HC6H	1039.3 [229.10]	2170 [85.4]	1095 [43.1]	
C205	660 GALLON 1600 [3528] 305 [12]	DQCA,DQCB DQCC	HC6G	1091.1 [240.54]	1987 [78.2]	758 [29.8]	3340 [131]
			HC6H	1106.1 [243.85]	1970 [77.6]	759 [29.9]	
			HC6J	1121.6 [247.26]	1953 [76.9]	761 [30]	
			HC6K	1148.9 [253.28]	1923 [75.7]	764 [30.1]	
		DQFAA,DQFAB DQFAC,DQFAD	HC6G	1144.0 [252.2]	2016 [79.4]	806 [31.7]	
			HC6H	1167.8 [257.45]	1994 [78.5]	809 [31.9]	
			HC6J	1190.1 [262.37]	1974 [77.7]	812 [32]	
			HC6K	1197.6 [264.02]	1966 [77.4]	813 [32]	
			P7B	1206.2 [265.92]	1946 [76.6]	814 [32]	
			P7B	1245.7 [274.62]	1925 [75.8]	818 [32.2]	
		DQMAA	HC5D	890.2 [196.25]	1869 [73.6]	744 [29.3]	
			HC5E	905.2 [199.56]	1847 [72.7]	742 [29.2]	
			HC5F	919.2 [202.65]	1826 [71.9]	742 [29.2]	
			HC6G	925.2 [203.97]	1808 [71.2]	749 [29.5]	
			HC6H	949.0 [209.22]	1778 [70.0]	749 [29.5]	
		DQPAA,DQPAB	HC5F	1030.3 [227.15]	2126 [83.7]	1091 [42.9]	
			HC6G	1037.5 [228.74]	2142 [84.3]		
			HC6H	1061.3 [233.98]	2162 [85.1]	1088 [42.8]	
C250	1000 GALLON 1846 [4069] 457 [18]	DQCA,DQCB DQCC	HC6G	1115.6 [245.95]	1984 [78.1]	734 [28.9]	3493 [137]
			HC6H	1130.6 [249.26]	1967 [77.4]	736 [29]	
			HC6J	1146.1 [252.67]	1950 [76.8]	738 [29.1]	
			HC6K	1173.4 [258.69]	1921 [75.6]	742 [29.2]	
		DQFAA,DQFAB DQFAC,DQFAD	HC6G	1168.5 [257.62]	2012 [79.2]	783 [30.8]	
			HC6H	1192.3 [262.86]	1991 [78.4]	787 [31]	
			HC6J	1214.6 [267.78]	1971 [77.6]	790 [31.1]	
			HC6K	1222.1 [269.43]	1964 [77.3]	791 [31.1]	
			P7B	1230.7 [271.33]	1943 [76.5]	792 [31.7]	
			P7C	1270.2 [280.03]	1923 [75.7]	797 [31.4]	
		DQMAA	HC5D	914.7 [201.66]	1867 [73.5]	716 [28.2]	
			HC5E	929.7 [204.97]	1844 [72.6]	716 [28.2]	
			HC5F	943.7 [208.06]	1824 [71.8]	716 [28.2]	
			HC6G	949.7 [209.38]	1808 [71.2]	724 [28.5]	
			HC6H	973.5 [214.63]	1778 [70.0]	724 [28.5]	
		DQPAA,DQPAB	HC5F	1054.9 [232.56]	2118 [83.3]	1064 [41.8]	
			HC6G	1062.1 [234.15]	2133 [83.9]		
			HC6H	1085.9 [239.39]	2153 [84.7]	1062 [41.8]	
C251	1500 GALLON 1914 [4220] 673 [26.5]	DQCA,DQCB DQCC	HC6G	1122.5 [247.46]	1979 [77.9]	701 [27.6]	3710 [146]
			HC6H	1137.5 [250.77]	1963 [77.3]	703 [27.7]	
			HC6J	1152.9 [254.18]	1946 [76.6]	706 [27.8]	
			HC6K	1180.2 [260.20]	1918 [75.5]	710 [27.9]	
		DQFAA,DQFAB DQFAC,DQFAD	HC6G	1175.4 [259.13]	2008 [79]	750 [29.5]	
			HC6H	1199.2 [264.37]	1987 [78.2]	754 [29.7]	
			HC6J	1221.5 [269.29]	1967 [77.5]	758 [29.8]	
			HC6K	1229.0 [270.94]	1960 [77.2]	759 [29.9]	
			P7B	1237.6 [272.84]	1940 [76.4]	760 [29.9]	
			P7C	1277.0 [281.54]	1920 [75.6]	766 [30.2]	
		DQMAA	HC5D	921.6 [203.17]	1867 [73.5]	675 [26.6]	
			HC5E	936.6 [206.48]	1846 [72.7]	675 [26.6]	
			HC5F	950.6 [209.57]	1826 [71.9]	675 [26.6]	
			HC6G	956.6 [210.89]	1808 [71.2]	683 [26.9]	
			HC6H	980.4 [216.14]	1780 [70.1]	686 [27.0]	
		DQPAA,DQPAB	HC5F	1061.7 [234.07]	2116 [83.3]	1039 [40.9]	
			HC6G	1068.9 [235.66]	2131 [83.8]		
			HC6H	1092.7 [240.90]	2151 [84.6]	1037 [40.8]	

*** WEIGHT & CG'S ARE SHOWN WITH F200 STEEL ENCLOSURE, AND STANDARD WET GENSET. ADDITION OF OTHER FEATURES MAY CHANGE THE WEIGHT. FOR F203 ENCLOSURE (ALUMINUM) REDUCE WEIGHT BY 720 (1588)

TABULATION

FUEL TANK WITH LEVEL 1 ENCLOSURE FEATURE CODE F201 OR F204

FUEL TANK FEATURE CODE	FUEL TANK SIZE/WEIGHT/ DIM_E	MODEL	GENERATOR	WEIGHT KG [LBS]	CG_DIM "A"	CG_DIM "C"	DIM_D
C249	200 GALLON 1380 [3040] 254 [10]	DQCA,DQCB DQCC	HC6G	1238.9 [273.12]	2309 [90.9]	825 [32.5]	3289 [129]
			HC6H	1253.9 [276.43]	2289 [90.1]	826 [32.5]	
			HC6J	1269.3 [279.84]	2269 [89.3]	826 [32.5]	
			HC6K	1296.6 [285.86]	2235 [88]	828 [32.6]	
		DQFAA,DQFAB DQFAC,DQFAD	HC6G	1291.8 [284.79]	2322 [91.4]	867 [34.1]	
			HC6H	1315.6 [290.03]	2296 [90.4]	868 [34.2]	
			HC6J	1337.9 [294.95]	2272 [89.4]	870 [34.2]	
			HC6K	1345.4 [296.60]	2263 [89.1]	870 [34.3]	
			P7B	1354.0 [298.50]	2242 [88.3]	871 [34.3]	
			P7C	1393.4 [307.20]	2214 [87.2]	873 [34.4]	
		DQMAA	HC5D	1038.0 [228.83]	2271 [89.4]	785 [30.9]	
			HC5E	1053.0 [232.14]	2245 [88.4]	785 [30.9]	
			HC5F	1067.0 [235.23]	2220 [87.4]	782 [30.8]	
			HC6G	1073.0 [236.55]	2202 [86.7]	790 [31.1]	
			HC6H	1096.8 [241.80]	2167 [85.3]	787 [31.0]	
		DQPAA,DQPAB	HC5F	1185.1 [261.24]	2246 [88.4]	1073 [42.4]	
			HC6G	1192.3 [262.83]	2262 [89.0]	1072 [42.2]	
			HC6H	1216.1 [268.08]	2283 [89.9]	1069 [42.1]	
C205	660 GALLON 1600 [3528] 305 [12]	DQCA,DQCB DQCC	HC6G	1261.0 [278.00]	2294 [90.3]	793 [31.2]	3340 [131]
			HC6H	1276.0 [281.31]	2275 [89.6]	794 [31.3]	
			HC6J	1291.5 [284.72]	2255 [88.8]	795 [31.3]	
			HC6K	1318.8 [290.74]	2222 [87.5]	797 [31.4]	
		DQFAA,DQFAB DQFAC,DQFAD	HC6G	1313.9 [289.67]	2307 [90.8]	835 [32.9]	
			HC6H	1337.7 [294.91]	2282 [89.8]	837 [33]	
			HC6J	1360.0 [300.38]	2259 [88.9]	839 [33]	
			HC6K	1367.5 [301.48]	2250 [88.6]	840 [33.1]	
			P7B	1376.1 [303.38]	2230 [87.8]	841 [33.1]	
			P7B	1415.6 [312.08]	2203 [86.7]	844 [33.2]	
		DQMAA	HC5D	1060.1 [233.71]	2253 [88.7]	747 [29.4]	
			HC5E	1075.1 [237.02]	2230 [87.8]	747 [29.4]	
			HC5F	1089.1 [240.11]	2205 [86.8]	744 [29.3]	
			HC6G	1095.1 [241.43]	2187 [86.1]	752 [29.6]	
			HC6H	1118.9 [246.68]	2154 [84.8]	752 [29.6]	
		DQPAA,DQPAB	HC5F	1207.1 [266.12]	2238 [88.1]	1069 [42.1]	
			HC6G	1214.3 [267.71]	2253 [88.7]	1068 [42.0]	
			HC6H	1238.1 [272.96]	2274 [89.5]	1066 [41.9]	
C250	1000 GALLON 1846 [4069] 457 [18]	DQCA,DQCB DQCC	HC6G	1285.5 [283.41]	2287 [90]	772 [30.4]	3493 [137]
			HC6H	1300.5 [286.72]	2268 [89.3]	773 [30.4]	
			HC6J	1316.0 [290.13]	2249 [88.6]	775 [30.5]	
			HC6K	1343.3 [296.15]	2217 [87.3]	777 [30.6]	
		DQFAA,DQFAB DQFAC,DQFAD	HC6G	1338.5 [295.08]	2300 [90.6]	814 [32.1]	
			HC6H	1362.2 [300.32]	2276 [89.6]	817 [32.2]	
			HC6J	1384.5 [305.24]	2253 [88.7]	819 [32.2]	
			HC6K	1392.0 [306.89]	2245 [88.4]	820 [32.3]	
			P7B	1402.1 [309.12]	2225 [87.6]	821 [32.3]	
			P7C	1440.1 [317.49]	2198 [86.5]	824 [32.4]	
		DQMAA	HC5D	1084.6 [239.12]	2245 [88.4]	724 [28.5]	
			HC5E	1099.6 [242.43]	2220 [87.4]	724 [28.5]	
			HC5F	1113.7 [245.52]	2197 [86.5]	721 [28.4]	
			HC6G	1119.6 [246.84]	2182 [85.9]	729 [28.7]	
			HC6H	1143.5 [252.09]	2146 [84.5]	729 [28.7]	
		DQPAA,DQPAB	HC5F	1231.7 [271.53]	2229 [87.8]	1048 [41.2]	
			HC6G	1238.9 [273.12]	2243 [88.3]	1047 [41.2]	
			HC6H	1262.7 [278.37]	2265 [89.1]	1046 [41.1]	
C251	1500 GALLON 1914 [4220] 673 [26.5]	DQCA,DQCB DQCC	HC6G	1292.4 [284.92]	2277 [89.7]	741 [29.2]	3710 [146]
			HC6H	1307.4 [288.23]	2259 [89]	743 [29.2]	
			HC6J	1322.9 [291.64]	2241 [88.2]	745 [29.3]	
			HC6K	1350.2 [297.66]	2209 [87]	747 [29.4]	
		DQFAA,DQFAB DQFAC,DQFAD	HC6G	1345.2 [296.59]	2291 [90.2]	784 [30.9]	
			HC6H	1369.1 [301.83]	2267 [89.3]	787 [31]	
			HC6J	1391.4 [306.75]	2245 [88.4]	790 [31.1]	
			HC6K	1398.9 [308.40]	2237 [88.1]	791 [31.1]	
			P7B	1407.5 [310.30]	2217 [87.3]	792 [31.2]	
			P7C	1447.0 [319.00]	2191 [86.3]	796 [31.3]	
		DQMAA	HC5D	1091.5 [240.63]	2235 [88.0]	688 [27.1]	
			HC5E	1106.5 [243.94]	2212 [87.1]	688 [27.1]	
			HC5F	1120.5 [247.03]	2192 [86.3]	688 [27.1]	
			HC6G	1126.5 [248.35]	2174 [85.6]	693 [27.3]	
			HC6H	1150.3 [253.60]	2141 [84.3]	696 [27.4]	
		DQPAA,DQPAB	HC5F	1238.5 [273.04]	2226 [87.6]	1026 [40.3]	
			HC6G	1245.7 [274.63]	2241 [88.2]		
			HC6H	1269.5 [279.88]	2262 [89.0]	1025 [40.3]	

*** WEIGHT & CG'S ARE SHOWN WITH F201 STEEL ENCLOSURE, AND STANDARD WET GENSET. ADDITION OF OTHER FEATURES MAY CHANGE THE WEIGHT. FOR F204 ENCLOSURE (ALUMINUM) REDUCE WEIGHT BY 896 (1975)

TABULATION

FUEL TANK WITH LEVEL 2 ENCLOSURE FEATURE CODE F202 OR F205

FUEL TANK FEATURE CODE	FUEL TANK SIZE/WEIGHT/ DIM_E	MODEL	GENERATOR	WEIGHT KG [LBS]	CG_DIM "A"	CG_DIM "C"	DIM_D
C249	200 GALLON 1380 [3040] 254 [10]	DQCA,DQCB DQCC	HC6G	1358.9 [299.59]	2204 [87]	1102 [43]	3272 [129]
			HC6H	1373.9 [302.90]	2187 [86]	1103 [43]	
			HC6J	1389.4 [306.31]	2170 [85]	1103 [43]	
			HC6K	1416.7 [312.33]	2140 [84]	1104 [43]	
		DQFAA,DQFAB DQFAC,DQFAD	HC6G	1411.9 [311.26]	2221 [87]	1141 [45]	
			HC6H	1435.6 [316.50]	2199 [87]	1143 [45]	
			HC6J	1457.9 [321.42]	2178 [86]	1144 [45]	
			HC6K	1465.4 [323.07]	2170 [85]	1161 [46]	
			P7B	1474.0 [324.97]	2151 [85]	1161 [46]	
			P7C	1513.5 [333.67]	2127 [84]	1147 [45]	
		DQMAA	HC5D	1158.0 [255.30]	2139 [84.2]	785 [30.9]	
			HC5E	1173.0 [258.61]	2118 [83.4]	785 [30.9]	
			HC5F	1187.1 [261.70]	2047 [80.6]	782 [30.8]	
			HC6G	1193.0 [263.02]	2082 [82.0]	790 [31.1]	
			HC6H	1216.9 [268.27]	2050 [80.7]	787 [31.0]	
		DQPAA,DQPAB	HC5F	1248.1 [275.14]	2139 [84.2]	962 [37.8]	
			HC6G	1255.3 [276.72]	2154 [84.8]		
			HC6H	1279.1 [281.97]	2174 [85.6]		
C205	660 GALLON 1600 [3528] 305 [12]	DQCA,DQCB DQCC	HC6G	1382.4 [304.47]	2193 [86]	1072 [42]	3323 [130.8]
			HC6H	1396.1 [307.78]	2177 [86]	1073 [42]	
			HC6J	1411.5 [311.19]	2160 [85]	1074 [42]	
			HC6K	1438.8 [317.21]	2131 [84]	1076 [42]	
		DQFAA,DQFAB DQFAC,DQFAD	HC6G	1434.0 [316.14]	2210 [87]	1112 [44]	
			HC6H	1457.8 [321.38]	2188 [86]	1114 [44]	
			HC6J	1480.1 [326.30]	2168 [85]	1116 [44]	
			HC6K	1487.6 [327.95]	2160 [85]	1116 [44]	
			P7B	1496.2 [329.85]	2142 [84]	1117 [44]	
			P7C	1535.6 [338.55]	2119 [83]	1120 [44]	
		DQMAA	HC5D	1180.2 [260.18]	2129 [83.8]	749 [29.5]	
			HC5E	1195.2 [263.49]	2108 [83.0]	749 [29.5]	
			HC5F	1209.2 [266.58]	2039 [80.3]	749 [29.5]	
			HC6G	1215.2 [267.90]	2072 [81.6]	754 [29.7]	
			HC6H	1239.0 [273.15]	2050 [80.4]	754 [29.7]	
		DQPAA,DQPAB	HC5F	1270.1 [280.02]	2133 [83.9]	962 [37.8]	
			HC6G	1277.3 [281.60]	2147 [84.5]	961 [37.8]	
			HC6H	1301.1 [286.85]	2167 [85.3]		
C250	1000 GALLON 1846 [4069] 457 [18]	DQCA,DQCB DQCC	HC6G	1405.6 [309.88]	2188 [86]	1052 [41]	3476 [137]
			HC6H	1420.6 [313.19]	2172 [86]	1054 [41]	
			HC6J	1436.1 [316.60]	2155 [85]	1055 [42]	
			HC6K	1463.4 [322.62]	2127 [84]	1057 [42]	
		DQFAA,DQFAB DQFAC,DQFAD	HC6G	1458.5 [321.55]	2205 [87]	1092 [43]	
			HC6H	1482.3 [326.79]	2184 [86]	1094 [43]	
			HC6J	1504.6 [331.71]	2164 [85]	1097 [43]	
			HC6K	1512.1 [333.36]	2156 [85]	1097 [43]	
			P7B	1520.7 [335.26]	2138 [84]	1098 [43]	
			P7C	1560.2 [343.96]	2115 [83]	1102 [43]	
		DQMAA	HC5D	1204.7 [265.59]	2123 [83.6]	729 [28.7]	
			HC5E	1219.7 [268.90]	2103 [82.8]	729 [28.7]	
			HC5F	1233.7 [271.99]	2035 [80.1]	729 [28.7]	
			HC6G	1239.7 [273.31]	2068 [81.4]	734 [28.9]	
			HC6H	1263.5 [278.56]	2037 [80.2]	734 [28.9]	
		DQPAA,DQPAB	HC5F	1294.7 [285.43]	2126 [83.7]	944 [37.1]	
			HC6G	1301.9 [287.01]	2140 [84.2]		
			HC6H	1325.7 [292.26]	2160 [85.0]	945 [37.2]	
C251	1500 GALLON 1914 [4220] 673 [26.5]	DQCA,DQCB DQCC	HC6G	1412.4 [311.39]	2181 [86]	1024 [40]	3693 [145]
			HC6H	1427.5 [314.70]	2165 [85]	1025 [40]	
			HC6J	1442.9 [318.11]	2157 [85]	1027 [40]	
			HC6K	1470.2 [324.13]	2131 [84]	1029 [41]	
		DQFAA,DQFAB DQFAC,DQFAD	HC6G	1465.4 [323.06]	2198 [87]	1064 [42]	
			HC6H	1489.1 [328.30]	2177 [86]	1067 [42]	
			HC6J	1511.5 [333.22]	2157 [85]	1069 [42]	
			HC6K	1518.9 [334.87]	2150 [85]	1070 [42]	
			P7B	1527.6 [336.77]	2092 [82]	1071 [42]	
			P7C	1567.0 [345.47]	2110 [83]	1075 [42]	
		DQMAA	HC5D	1211.5 [267.10]	2118 [83.4]	696 [27.4]	
			HC5E	1227.5 [270.61]	2098 [82.6]	696 [27.4]	
			HC5F	1240.6 [273.50]	2029 [79.9]	696 [27.4]	
			HC6G	1246.6 [274.82]	2062 [81.2]	701 [27.6]	
			HC6H	1270.4 [280.07]	2034 [80.1]	701 [27.6]	
		DQPAA,DQPAB	HC5F	1301.5 [296.94]	2124 [83.6]	924 [36.3]	
			HC6G	1308.7 [288.52]	2138 [84.1]		
			HC6H	1332.5 [293.77]	2158 [84.9]	925 [36.4]	

*** WEIGHT & CG'S ARE SHOWN WITH F202 STEEL ENCLOSURE, AND STANDARD WET GENSET. ADDITION OF OTHER FEATURES MAY CHANGE THE WEIGHT. FOR F205 ENCLOSURE (ALUMINUM) REDUCE WEIGHT BY 924 (2036)

UNLESS OTHERWISE SPECIFIED, ALL DIMENSIONS ARE IN MILLIMETERS

DEC	X ±1	0.00- 4.99 ±0.15/-0.00
	.X ±0.8	5.00- 9.99 ±0.20/-0.10
	.XX ±0.38	10.00-17.49 ±0.25/-0.13
		17.50-24.99 ±0.30/-0.13

ANG TOL: ± 1.0°

SCALE: 1/1

DWG NO 0500-4166

DO NOT SCALE PRINT

- CONFIDENTIAL - PROPERTY OF CUMMINS POWER GENERATION GROUP

DRN M. JOHNSON

CHK Z.MOGES

APVD Z.MOGES

DATE 03FEB11

CAD INTERPRETATION: PTC CREO 1.0 ELEMENTS/ PRO ASME Y14.5M-1994

FIRST USED ON DFHD

CUMMINS POWER GENERATION

OUTLINE,FUEL SYSTEM (TANKS)

SITE CODE PGF

REV E

A035J956

SHEET 5 OF 5

REV E

Drawing Name: A035J957 Revision: E
Part Name: A035J956 Revision: E
Sheet 5 of 6

PTC® Creo® Parametric

REL NO	LTR	NO	REVISION	DWN	CKD	APVD	DATE
ECO-149219	D	1	GALLONS FOR FEATURE CODE C250 1000 WAS 1500	CJF	KK	K KISHORE	14JAN15
		2	GALLONS FOR FEATURE CODE C251 1500 WAS 1000	CJF	KK	K KISHORE	14JAN15
		3	SECURITY CLASS PUBLIC WAS PROPRIETARY	CJF	KK	K KISHORE	14JAN15

GRADE/ROOF MOUNTED GENERATOR SETS

	CUMMINS GENSET MODEL	CONFIGURATION	SEISMIC ISOLATOR	QTY	ATTACHMENT TO STEEL	ATTACHMENT TO CONCRETE				
					ISOLATOR ATTACHMENT HARDWARE TO STEEL	ISOLATOR ATTACHMENT HARDWARE TO CONCRETE	ANCHOR EMBEDMENT	MINIMUM EDGE DISTANCE (FROM ANCHOR LOCATION)	CONCRETE COMPRESSIVE STRENGTH	SLAB THICKNESS
1	DQCA, DQCB, DQCC	SET-MOUNTED COOLING	A034C357 A050E753	8	4 PER ISOLATOR (32 TOTAL) 3/4" DIA, ASTM A325 BOLTS	4 PER ISOLATOR (32 TOTAL) HILTI KWIK BOLT TZ - CS, Ø3/4" X 4.75" (M20 X 120mm)	120mm MIN.	254mm MIN	4,000 PSI MIN.	305mm MIN.
2	DQFAA, DQFAB, DQFAE, DQFAF DQFAC, DQFAD, DQFAG, DQFAH	SET-MOUNTED & REMOTE COOLING	A034C357 A050E753	10	4 PER ISOLATOR (40 TOTAL) 3/4" DIA, ASTM A325 BOLTS	4 PER ISOLATOR (40 TOTAL) HILTI KWIK BOLT TZ - CS, Ø3/4" X 4.75" (M20 X 120mm)	120mm MIN.	356mm MIN.	4,000 PSI MIN.	305mm MIN.
3	DQPAA, DQPAB	SET-MOUNTED COOLING	A034C357 A050E753	8	4 PER ISOLATOR (32 TOTAL) 3/4" DIA, ASTM A325 BOLTS	4 PER ISOLATOR (32 TOTAL) HILTI KWIK BOLT TZ - CS, Ø3/4" X 4.75" (M20 X 120mm)	120mm MIN.	203mm MIN.	4,000 PSI MIN.	203mm MIN.

GRADE/ROOF MOUNTED LIFTING BASES

CUMMINS GENSET MODEL	FEATURE CODE	CONFIGURATION	CONCRETE ANCHORS	ANCHOR EMBEDMENT	MINIMUM EDGE DISTANCE (FROM ANCHOR LOCATION)	CONCRETE COMPRESSIVE STRENGTH	CONCRETE SLAB THICKNESS
DQPAA, DQPAB, DQCA, DQCB, DQCC DQFAA, DQFAB, DQFAC, DQFAD	F200 F203	LIFTING BASE	HILTI KWIK BOLT TZ - CS, QTY 12 Ø3/4" X 4.75" (M20 X 254mm)	120mm MIN.	305mm MIN.	4,000 PSI MIN.	305mm MIN.
DQPAA, DQPAB, DQCA, DQCB, DQCC DQFAA, DQFAB, DQFAC, DQFAD	F201 F204	LIFTING BASE	HILTI KWIK BOLT TZ - CS, QTY 16 Ø3/4" X 4.75" (M20 X 254mm)	120mm MIN.	254mm MIN	4,000 PSI MIN.	254mm MIN
DQPAA, DQPAB, DQCA, DQCB, DQCC DQFAA, DQFAB, DQFAC, DQFAD	F202 F205	LIFTING BASE	HILTI KWIK BOLT TZ - CS, QTY 18 Ø3/4" X 4.75" (M20 X 254mm)	120mm MIN.	254mm MIN	4,000 PSI MIN.	254mm MIN

GRADE/ROOF MOUNTED FUEL TANKS

FEATURE CODE	CUMMINS FUEL TANK PART NUMBER	GALLONS	CONFIGURATION	SEISMIC LEVEL	CONCRETE ANCHORS	ANCHOR EMBEDMENT	EDGE DISTANCE (FROM CORNER ANCHOR LOCATION)	CONCRETE COMPRESSIVE STRENGTH	CONCRETE SLAB THICKNESS
C253	A045S870	2400	TANK	1.40 < SDS <= 1.94 Z/H = 0.0	(QTY 18) 0.79" DIA. UNDERCUT ANCHORS HILTI HDA-P, M20 X 250-50	250mm MIN.	305mm MIN.	4,000 PSI MIN.	356mm MIN.
				SDS = 0.64, Z/H = 1					
				SDS < 1.40 Z/H = 0.0	(QTY 18) 3/4" DIA. EXPANSION ANCHORS HILTI KWIK BOLT TZ-CS	120mm MIN.	305mm MIN.	4,000 PSI MIN.	305mm MIN.
C252	A040X449	2000	TANK	1.20 < SDS <= 1.94 Z/H = 0.0	(QTY 16) 0.79" DIA. UNDERCUT ANCHORS HILTI HDA-P, M20 X 250-50	250mm MIN.	356mm MIN.	4,000 PSI MIN.	356mm MIN.
				SDS = 0.64, Z/H = 1					
				SDS < 1.20 Z/H = 0.0	(QTY 16) 3/4" DIA. EXPANSION ANCHORS HILTI KWIK BOLT TZ-CS	120mm MIN.	305mm MIN.	4,000 PSI MIN.	305mm MIN.
C250 C251	A045P211 A045P210	1000 1500	TANK	0.95 < SDS <= 1.94 Z/H = 0.0	(QTY 12) 0.79" DIA. UNDERCUT ANCHORS HILTI HDA-P, M20 X 250-50	250mm MIN.	406.4mm MIN.	4,000 PSI MIN.	356mm MIN.
				SDS = 0.64, Z/H = 1					
				SDS < 0.95 Z/H = 0.0	(QTY 12) 3/4" DIA. EXPANSION ANCHORS HILTI KWIK BOLT TZ-CS	120mm MIN.	305mm MIN.	4,000 PSI MIN.	305mm MIN.
C205 C249	A045P209 A045P208	660 200	TANK	1.10 < SDS <= 1.94 Z/H = 0.0	(QTY 12) 0.79" DIA. UNDERCUT ANCHORS HILTI HDA-P, M20 X 250-50	250mm MIN.	356mm MIN.	4,000 PSI MIN.	356mm MIN.
				SDS = 0.64, Z/H = 1					
				SDS < 1.10 Z/H = 0.0	(QTY 12) 3/4" DIA. EXPANSION ANCHORS HILTI KWIK BOLT TZ-CS	120mm MIN.	254mm MIN	4,000 PSI MIN.	305mm MIN.

-THIS IS A CONTROLLED ITEM-
PER CPG PROCEDURE FRE-1002

TO MAINTAIN COMPLIANCE WITH REQUIREMENTS OF THE CODES, STANDARDS, OR AGENCIES LISTED BELOW

☐ CSA ☐ UL ☐ CE ☐ RVIA ☐ ABYC
☒ IBC ☐ OTHER ____ ☐ OTHER ____ ☐ OTHER ____

CHANGES, DEVIATIONS, OR SUBSTITUTIONS OF MATERIAL, PROCESS, OR PERFORMANCE FOR THIS ITEM MUST BE APPROVED BY THE FOLLOWING CONTROLLED ITEM APPROVER.

RESPONSIBLE CIA ROLE STATIONARY GENSET CIA
RESPONSIBLE CIA ROLE ____
RESPONSIBLE CIA ROLE ____

UNLESS OTHERWISE SPECIFIED, ALL DIMENSIONS ARE IN MILLIMETERS

DIM		HOLE	
	X ± 1		0.00- 4.99 +0.15/-0.08
	.X ± 0.8		5.00- 9.99 +0.20/-0.10
	.XX ± 0.38		10.00-17.49 +0.25/-0.13
			17.50-24.99 +0.30/-0.13

ANG TOL: ± 1.0° SCALE: 1/1

SIM TO A030B114
DO NOT SCALE PRINT
- CONFIDENTIAL -
PROPERTY OF CUMMINS POWER GENERATION GROUP

DWN M.JURISCH
CKD V.GUPTA
APVD V.KODIMALA
DATE 20FEB13
FOR INTERPRETATION OF DIMENSIONING AND TOLERANCING, SEE ASME Y14.5M-1994
FIRST USED ON DQFAA

SITE CODE PGF

CUMMINS POWER GENERATION
INSTALLATION, GENSET
SEISMIC REQUIREMENTS

DWG SIZE D | A045K403 | SHEET 1 OF 3 | DWG REV D

Drawing Name: A045K404 Revision: D
Part Name: A045K403 Revision: D
Sheet 1 of 4

PTC® Creo® Parametric

REL NO	LTR	NO	REVISION	DWN	CKD	APVD	DATE
ECO-149219	D	--	-----	CJF	KK	K KISHORE	14JAN15

SEISMIC INSTALLATIONS NOTES:

1. THE INSTALLATION GUIDELINES IN THIS DRAWING ARE RECOMMENDATIONS FROM THE ISOLATOR SUPPLIER AND SHOULD BE CONTACTED IF IN DOUBT.

2. THE DESIGN OF POST-INSTALLED ANCHORS IN CONCRETE USED FOR THE COMPONENT ANCHORAGE IS PRE-QUALIFIED FOR SEISMIC APPLICATIONS IN ACCORDANCE WITH "ACI 355.2" AND DOCUMENTED IN A REPORT BY A REPUTABLE TESTING AGENCY. (EX. THE EVALUATION SERVICE REPORT ISSUED BY THE INTERNATIONAL CODE COUNCIL)

3. EQUIPMENT ANCHORAGE MUST BE INSTALLED PER THE MANUFACTURER'S INSTRUCTIONS.

4. ANCHORS MUST BE INSTALLED IN MINIMUM 4000 PSI COMPRESSIVE STRENGTH NORMAL WEIGHT CONCRETE EXCEPT WHERE OTHERWISE INDICATED. CONCRETE AGGREGATE MUST COMPLY WITH "ASTM C33". INSTALLATION IN STRUCTURAL LIGHTWEIGHT CONCRETE IS NOT PERMITTED UNLESS OTHERWISE APPROVED BY THE STRUCTURAL ENGINEER OF RECORD.

5. ANCHORS MUST BE INSTALLED TO THE TORQUE SPECIFICATION AS RECOMMENDED BY THE ANCHOR MANUFACTURER TO OBTAIN MAXIMUM LOADING.

6. ANCHORS MUST BE INSTALLED IN LOCATIONS SPECIFIED ON THIS INSTALLATION DRAWING.

7. WIDE WASHERS MUST BE INSTALLED AT EACH ANCHOR LOCATION BETWEEN THE ANCHOR HEAD AND EQUIPMENT FOR TENSION LOAD DISTRIBUTION. WIDE WASHERS MUST BE SERIES "W" OF AMERICAN NATIONAL STANDARD TYPE "A" PLAIN WASHERS (ANSI B18.22.1-1965, R1975) WITH THE NOMINAL WASHER SIZE SELECTED TO MATCH THE SPECIFIED NOMINAL ANCHOR DIAMETER.

8. CONCRETE FLOOR SLAB AND CONCRETE HOUSEKEEPING PADS MUST BE DESIGNED AND REBAR REINFORCED FOR SEISMIC APPLICATIONS IN ACCORDANCE WITH "ACI 318".

9. ALL HOUSEKEEPING PAD THICKNESSES MUST BE DESIGNED IN ACCORDANCE WITH THE PRE-QUALIFICATION TEST REPORT AS DEFINED IN NOTE 1 OR A MINIMUM OF 1.5X THE ANCHOR EMBEDMENT DEPTH, WHICHEVER IS LARGEST.

10. ALL HOUSEKEEPING PADS MUST BE DOWELLED OR CAST INTO THE BUILDING STRUCTURAL FLOOR SLAB AND DESIGNED FOR SEISMIC APPLICATION PER "ACI 318" AND AS APPROVED BY THE STRUCTURAL ENGINEER OF RECORD.

11. FLOOR MOUNTED EQUIPMENT (WITH OR WITHOUT A HOUSEKEEPING PAD) MUST BE INSTALLED TO A REBAR REINFORCED STRUCTURAL CONCRETE FLOOR THAT IS SEISMICALLY DESIGNED AND APPROVED BY THE ENGINEER OF RECORD TO RESIST THE ADDED SEISMIC LOADS FROM COMPONENTS BEING ANCHORED TO THE FLOOR.

12. WHEN INSTALLING TO A FLOOR, REBAR INTERFERENCE MUST BE CONSIDERED.

13. ATTACHING SEISMIC CERTIFIED EQUIPMENT TO ANY FLOOR OR WALL OTHER THAN THOSE CONSTRUCTED OF STRUCTURAL CONCRETE AND DESIGNED TO ACCEPT THE SEISMIC LOADS FROM SAID EQUIPMENT IS NOT PERMITTED BY THIS SPECIFICATION AND BEYOND THE SCOPE OF THIS CERTIFICATION.

14. ATTACHING SEISMIC CERTIFIED EQUIPMENT TO ANY FLOOR CONSTRUCTED OF LIGHT WEIGHT CONCRETE OVER STEEL DECKING IS NOT PERMITTED BY THIS SPECIFICATION AND BEYOND THE SCOPE OF THIS CERTIFICATION.

15. ATTACHING SEISMIC CERTIFIED EQUIPMENT TO ANY CONCRETE BLOCK WALLS OR CINDER BLOCK WALLS IS NOT PERMITTED BY THIS SPECIFICATION AND BEYOND THE SCOPE OF THIS CERTIFICATION.

16. INSTALLATION UPON ANY STEEL DUNNAGE SHALL BE COORDINATED WITH THE STRUCTURAL ENGINEER OF RECORD. STEEL DUNNAGE MUST BE CERTIFIED BY OTHERS AS IS BEYOND THE SCOPE OF THIS REPORT.

17. INSTALLATION UPON ANY ROOFTOP CURB SHALL BE COORDINATED WITH THE CURB MANUFACTURER AND THE STRUCTURAL ENGINEER OF RECORD. ANY CURB OR CONCRETE PAD THAT SUPPORTS THE GENSET UNIT IS BEYOND THE SCOPE OF THIS CERTIFICATION.

18. ALL ACCESSORY ATTACHMENTS (PIPE, CONDUIT, ETC.) TO THE EQUIPMENT SHALL BE ATTACHED IN A MANNER THAT ALLOWS RELATIVE MOTION (FLEX, SWING, JOIN/ELBOW, ETC.) TO PREVENT FAILURE DUE TO DIFFERENTIAL MOVEMENT BETWEEN THE EQUIPMENT AND ATTACHED ACCESSORY CAUSED BY SEISMIC LOADING ON THE SYSTEM.

19. REFER TO THE MANUFACTURER'S INSTALLATION INSTRUCTIONS FOR ANCHOR REQUIREMENTS AND MOUNTING CONSIDERATIONS FOR SEISMIC APPLICATIONS. MOUNTING REQUIREMENT DETAILS SUCH AS BRAND, TYPE, EMBEDMENT DEPTH, EDGE SPACING, ANCHOR SPACING, CONCRETE STRENGTH, WALL BRACING, AND SPECIAL INSPECTION MUST BE OUTLINED AND APPROVED BY THE PROJECT STRUCTURAL ENGINEER OF RECORD. THE INSTALLING CONTRACTOR IS RESPONSIBLE FOR THE PROPER INSTALLATION OF ALL ANCHORS AND MOUNTING HARDWARE, OBSERVING THE MOUNTING REQUIREMENT DETAILS OUTLINED BY THE ENGINEER OF RECORD. CONTACT THE MANUFACTURE'S REPRESENTATIVE IF A DETAILED SEISMIC INSTALLATION CALCULATION PACKAGE IS REQUIRED.

UNLESS OTHERWISE SPECIFIED, ALL DIMENSIONS ARE IN MILLIMETERS

DIM		HOLE	
	X ± 1		0.00- 4.99 +0.15/-0.08
	.X ± 0.8		5.00- 9.99 +0.20/-0.10
			10.00-17.49 +0.25/-0.13
	.XX± 0.38		17.50-24.99 +0.30/-0.13

ANG TOL: ± 1.0° SCALE: 1/1

SIM TO A030B114

DO NOT SCALE PRINT

- CONFIDENTIAL -
PROPERTY OF CUMMINS POWER GENERATION GROUP

DWN M.JURISCH
CKD V.GUPTA
APVD V.KODIMALA
DATE 20FEB13

FOR INTERPRETATION OF DIMENSIONING AND TOLERANCING, SEE ASME Y14.5M-1994

FIRST USED ON DQFAA

SITE CODE PGF

CUMMINS POWER GENERATION

INSTALLATION,GENSET
SEISMIC REQUIREMENTS

SIZE D DWG A045K403 SHEET 2 of 3 DWG REV D

PTC® Creo® Parametric

REL NO	LTR	NO	REVISION	DWN	CKD	APVD	DATE
ECO-149219	D	--	-----	CJF	KK	K KISHORE	14JAN15

REQUIREMENTS FOR GENSETS

DQPAA, DQPAB, DQCA, DQCB, DQCC
DQFAA, DQFAB, DQFAC, DQFAD
DQFAE, DQFAF, DQFAG, DQFAH

PARAMETERS	IBC 2000, 2003, 2006, 2009, 2012	
	Sds<=0.647	Sds<=1.94
	Ip<=1.5	Ip<=1.5
	ap/Rp<=1.25	ap/Rp<=1.25
	z/h=1.0 (ROOF)	z/h=0 (GRADE)
	Fp/Wp<=1.46 LRFD	Fp/Wp<=1.46 LRFD

UNLESS OTHERWISE SPECIFIED, ALL DIMENSIONS ARE IN MILLIMETERS

DIM: X ± 1; .X ± 0.8; .XX ± 0.38

HOLE: 0.00- 4.99 +0.15/-0.08; 5.00- 9.99 +0.20/-0.10; 10.00-17.49 +0.25/-0.13; 17.50-24.99 +0.30/-0.13

ANG TOL: ± 1.0°

SCALE: 1/1

SYM TO A030B114

DO NOT SCALE PRINT

- CONFIDENTIAL -
PROPERTY OF CUMMINS POWER GENERATION GROUP

DWN M. JURISCH
CKD V. GUPTA
APVD V. KODIMALA
DATE 20FEB13

FOR INTERPRETATION OF DIMENSIONING AND TOLERANCING, SEE ASME Y14.5M-1994

FIRST USED ON DQFAA

SITE CODE PGF

CUMMINS POWER GENERATION

INSTALLATION, GENSET
SEISMIC REQUIREMENTS

SIZE D | A045K403 | SHEET 3 of 3 | REV D

Drawing Name: A045K404 Revision: D
Part Name: A045K403 Revision: D
Sheet 3 of 4

THE VMC GROUP
The Power of Together ™

Cummins Power Generation

CERTIFICATE OF COMPLIANCE

SEISMIC DESIGN OF NONSTRUCTURAL COMPONENTS AND SYSTEMS

IBC CERTIFIED THE VMC GROUP

Certification No.

VMA-44898-CCS (Revision 8)

Expiration Date: 12/31/2016

Certification Parameters:

The nonstructural products (mechanical and/or electrical components) listed on this certificate are CERTIFIED[1] FOR SEISMIC APPLICATIONS in accordance with the following building code[2] releases.

IBC 2000, IBC 2003, IBC 2006, IBC 2009, IBC 2012

The following model designations, options, and accessories are included in this certification. Reference report number **VMA-44898-1, -2, -3** as issued by The VMC Group for a complete list of certified models, included accessories/options, and certified installation methods.

Cummins Power Generation Standard Engine Generator Set Packages

The above referenced equipment is **APPROVED** for seismic application when properly installed,[3] used as intended, and contains a Seismic Certification Label referencing this Certificate of Compliance[4]. As limited by the tabulated values, below grade, grade, and roof-level installations, installations in essential facilities, for life safety applications, and/or of equipment containing hazardous contents are permitted and included in this certification with an Equipment Importance Factor assigned as I_P=1.5.

Certified Seismic Design Levels	
S_{DS} <= 1.94	S_{DS} <= 0.64
z/h <= 0.0 (Equipment at Grade)	z/h <= 1.0 (Equipment on Roof)
Soil Classes A, B, C, D, Seismic Risk Category I, II, III, IV, and Seismic Design Categories A, B, C, D, E, and F are all covered under this certification, limited by the S_{DS} value stated above.	

Certified Seismic Installation Methods	
Rigid mounting from unit base to rigid structure	External isolation mounting from unit base to rigid structure

Shake Test of Active and Energized Components, Non-Active Components, and Equipment Structure:

Qualified by successful seismic shake table testing at the nationally recognized University of California Berkeley Pacific Earthquake Engineering Research Center under the witness of the Certified Seismic Qualification Agency, The VMC Group. Testing was conducted in accordance with ICC-ES AC-156 to envelope the required response spectrum (RRS) of maximum flexible region acceleration (A_{FLEX}) of 1.94 g and a zero period acceleration (A_{RIG}) of 0.78 g. This test level corresponds to an S_{DS} = 1.94 g with a z/h of 0.0. Functionality was verified before and after the shake test.

Basis of Design for Supports and Attachments to the Building:

For calculations and analysis of the equipment attachment to the building structure, the equivalent static force method was applied using the Seismic Design Acceleration, F_P/W_P,[5] for Load Resistance Factored Design (LRFD) methods. This includes but is not limited to the unit anchoring requirements and external isolation calculations.

Seismic Design Acceleration Equation $F_P/W_P = 0.4 \times (S_{DS}=1.94) \times (I_P=1.5) \times (a_P/R_P=1.25) \times (1+2(z/h=0.0)) = 1.46$ g

a_P/R_P is representative of the worst-case shake tested condition, as determined from Table 13.6-1 in ASCE7-10 Chapter 13.

THE VMC GROUP
The Power of Together ™

Cummins Power Generation

CERTIFICATE OF COMPLIANCE

SEISMIC DESIGN OF NONSTRUCTURAL COMPONENTS AND SYSTEMS

Certified Product Table:

						Steel Enclosure Options			Aluminum Enclosure Options			Fuel Tank Options
Genset Type	Model Designation	Rating (kW)	EPA Rating	Open Genset with Packaged Radiator	Open Genset with Remote Radiator	Weather Protective	Sound Level 1	Sound Level 2	Weather Protective	Sound Level 1	Sound Level 2	Standard Sub-base
Diesel 60 Hz ECO	DQFAH	1000	Tier 4	•	•	N/A	N/A	N/A	N/A	N/A	N/A	N/A
	DQFAG	900		•	•	N/A	N/A	N/A	N/A	N/A	N/A	N/A
	DQFAF	800		•	•	N/A	N/A	N/A	N/A	N/A	N/A	N/A
	DQFAE	750		•	•	N/A	N/A	N/A	N/A	N/A	N/A	N/A
Diesel 60 Hz	DQFAD	1000	Tier 2	•	•	•	•	•	•	•	•	≤2400 Gallons
	DQFAC	900		•	•	•	•	•	•	•	•	≤2400 Gallons
	DQFAB	800		•	•	•	•	•	•	•	•	≤2400 Gallons
	DQFAA	750		•	•	•	•	•	•	•	•	≤2400 Gallons
	DQCC	800		•	•	•	•	•	•	•	•	≤2400 Gallons
	DQCB	750		•	•	•	•	•	•	•	•	≤2400 Gallons
	DQCA	600		•	•	•	•	•	•	•	•	≤2400 Gallons
	DQPAB	650		•	•	•	•	•	•	•	•	≤2400 Gallons
	DQPAA	600		•	•	•	•	•	•	•	•	≤2400 Gallons

This certification **includes** the open generator set and the enclosed generator set when installed with or without the sub-base tank and with or without a package mounted radiator, as limited by the table above. The generator set and included options shall be a catalogue design and factory supplied. The generator set and applicable options shall be installed and attached to the building structure per the manufacturer supplied seismic installation instructions. This certification **excludes** all non-factory supplied accessories, including but not limited to mufflers, remote radiators, isolation/restraint devices and electrical components.

IBC CERTIFIED THE VMC GROUP

Issue Date: November 6, 2009
Revision: January 30, 2014
Expiration Date: December 31, 2016

THE VMC GROUP
The Power of Together ™

Cummins Power Generation

CERTIFICATE OF COMPLIANCE

SEISMIC DESIGN OF NONSTRUCTURAL COMPONENTS AND SYSTEMS

Notes and Comments:

1. All equipment listed herein successfully passed the seismic acceptance criteria for shake testing non-structural components and systems as set forth in the ICC AC-156. The Test Response Spectrum (TRS) enveloped the required response spectrum (RRS) for all units tested. The units cited in this certification were representative sample(s) of a contingent of models and all remained captive and structurally sound after the seismic shake simulation. The units also remained functionally operational after the simulation testing as functional testing was completed by the equipment manufacturer before and after the seismic simulations. Although a seismic qualified unit inherently contains some wind resisting capacity, that capacity is undetermined and is excluded from this certification. Snow/Ice loads have been neglected and thus limit the unit to be installed both indoors (covered by an independent protective structure) and out of doors (exposed to accumulating snow/ice) for ground snow loads no greater than 30 psf for all applications.

2. The following building codes are addressed under this certification:

   IBC 2012 – referencing ASCE7-10 and ICC AC-156
   IBC 2009 – referencing ASCE7-05 and ICC AC-156
   IBC 2006– referencing ASCE7-05 and ICC AC-156
   IBC 2003– referencing ASCE7-02 and ICC AC-156
   IBC 2000– referencing ASCE7-98 and ICC AC-156

3. Refer to the manufacturer supplied installation drawings for anchor requirements and mounting considerations for seismic applications. Required anchor locations, size, style, and load capacities (tension and shear) are specified on the installation drawings. Mounting requirement details such as anchor brand, type, embedment depth, edge spacing, anchor-to-anchor spacing, concrete strength, special inspection, wall design, and attachment to non-building structures must be outlined and approved by the Engineer of Record for the project or building. Structural walls, structural floors, and housekeeping pads must also be seismically designed and approved by the project or building Structural Engineer of Record to withstand the seismic anchor loads as defined on the installation drawings. The installing contractor is responsible for observing the installation detailed in the seismic installation drawings and the proper installation of all anchors and mounting hardware.

4. For this certificate and certification to remain valid, this certificate must correspond to the "Seismic Certification Label" found affixed to the unit by the factory. The label ensures the manufacturer built the unit in conformance to the IBC seismic design criteria set forth by the Certified Seismic Qualification Agency, The VMC Group, and meets the seismic design levels claimed by this certificate.

5. When the site soil properties or final equipment installation location are not known, the soil site coefficient, F_A, defaults to the Soil Site Class D coefficient. Soil Classes A, B, C, D, Seismic Risk Category I, II, III, IV, and Seismic Design Categories A, B, C, D, E, and F are all covered under this certification, limited by the S_{DS} values on page 1, respective to the applicable building code, Importance factor, and z/h ratio.

6. Mechanical, Electrical, and Plumbing connections to the equipment must be flexibly attached as to not transfer load through the connection. The structural integrity of any conduit, cable trays, piping, ductwork and/or flexible connections is the responsibility of others. This certification does not guarantee the equipment will remain compliant to UL or NEMA standards after a seismic event.

John P. Giuliano, PE
President, The VMC Group

Issue Date: November 6, 2009
Revision: January 30, 2014
Expiration Date: December 31, 2016

IBC CERTIFIED THE VMC GROUP

Cummins Power Generation

BTPC

bypass isolation transfer switch open or closed transition 150 – 4000 amps

BTPC bypass isolation transfer switches combine a drawout automatic transfer switch with isolation mechanism and a manual bypass switch, to provide redundant power transfer and re-transfer capability for critical-need applications requiring a reliable power supply to the load. BTPC switches are available with closed transition for transferring critical loads without interruption.

Like conventional transfer switches, BTPC transfer switches are designed for operation and switching of electrical loads between primary power and standby generator sets. The switch monitors both power sources, signals generator set startup, automatically transfers power and returns the load to the primary power source when the utility returns and stabilizes.

Features

- **PowerCommand® control:** A fully featured microprocessor-based control with digital display. Controls allow operator to enter settings and make adjustments to software-enabled features easily and accurately. Accommodates up to 8 event schedules.
- **Closed transition available:** By briefly connecting the two sources (for 100 msec or less), the transfer from the alternate source back to the normal source occurs without interruption in the power supply to loads.
- **Programmed transition:** Open transition timing can be adjusted to completely disconnect the load from both sources for a programmed time period, as recommended by NEMA MG-1 for transfer of inductive loads.
- **Closed door drawout operation:** Bypass and total isolation of the automatic transfer switch occurs behind closed doors, to provide arc flash protection for operator.
- **For critical loads:** Suitable for use in emergency, legally required and optional standby applications.

BTPC bypass-isolation transfer switch

- **Advanced transfer switch mechanism:** Unique bi-directional linear actuator provides smooth, continuous transfer switch action during automatic operation.
- **Robust control system design:** Optically isolated logic inputs and isolation transformers for AC power inputs provide high-voltage surge protection.
- **Main contacts:** Heavy-duty silver alloy contacts with multi-leaf arc chutes are rated for 100% load interruption. They require no routine contact maintenance and provide 100% continuous current ratings.
- **Communications capability:** The transfer switch is capable of communicating with other transfer switches, SCADA networked accessories, or Cummins Power Generation generators utilizing LonWorks® protocol.
- **Easy service/access:** Single-plug harness connection and compatible terminal markings simplify servicing. Access space is ample. Door-mounted controls are field-programmable; no tool is required.
- **Complete product line:** Cummins Power Generation offers a wide range of equipment, accessories and services to suit virtually any backup power application.
- **Warranty and service:** Products are backed by a comprehensive warranty and a worldwide network of distributors with factory-trained service technicians.

Transfer switch mechanism

- Transfer switch mechanism is electrically operated and mechanically held in the Source 1 and Source 2 positions. The transfer switch incorporates electrical and mechanical interlocks to prevent inadvertent interconnection of the sources.
- Independent break-before-make action is used for both 3-pole and 4-pole/ switched neutral switches. This design allows use of sync check operation when required, or control of the operating speed of the transfer switch for proper transfer of motor and rectifier-based loads (programmed transition feature).
- True 4-pole switching allows for proper ground (earth) fault sensing and consistent, reliable operation for the life of the transfer switch. The neutral poles of the transfer switch have the same ratings as the phase poles and are operated by a common crossbar mechanism, eliminating the possibility of incorrect neutral operation at any point in the operating cycle, or due to failure of a neutral operator.
- High pressure silver alloy contacts resist burning and pitting. Separate arcing surfaces further protect the main contacts. Contact wear is reduced by multiple leaf arc chutes that cool and quench the arcs. Barriers separate the phases to prevent interphase flashover. A transparent protective cover allows visual inspection while inhibiting inadvertent contact with energized components.
- Switch mechanism, including contact assemblies, is third party certified to verify suitability for applications requiring high endurance switching capability for the life of the transfer switch. Withstand and closing ratings are validated using the same set of contacts, further demonstrating the robust nature of the design.

Bypass mechanism

- Manual bypass switch mechanism allows the operator to select either the normal or emergency source by closing the bypass contacts. Visual indicators show bypass “source selected”, bypass "closed" or "open" to either source, and automatic transfer switch isolation or "disable." Bypass of the automatic switch is accomplished with permanently mounted, mechanically operated devices without disturbing the power supply to system loads, and without opening enclosure door.
- Isolation contacts allow the automatic transfer switch and the bypass switch to be separated electrically and mechanically. The automatic transfer switch is isolated by a drawout mechanism similar to that used on power circuit breakers on transfer switches rated 1200 amps and less. On 1600-4000 amp models the drawout carriage is wheel-mounted.
- Protective safety shutters, provided on switches up to and including 1200 amps, cover the stationary power terminals on the bypass switch when the automatic transfer switch is isolated and removed.
- The drawout mechanism can be latched in one of three positions: “connected”, “test”, and “isolated”. In the connected position the mechanism is locked. In the test position, the automatic switch is isolated but the controls receive power. In the isolated position, the automatic switch is completely isolated.
- The bypass switch mechanism is identical to the automatic switch except it is mechanically operated rather than electrically operated. Mechanical interlocks prevent operation of the bypass or automatic switches in any mode that would result in the interconnection of the sources.

Power command control

PowerCommand controls are microprocessor based and developed specifically for automatic transfer switch operation. The control includes the features and options required for most applications.

- Flash memory stores the control settings.
- Contents of the memory are not lost even if power to the controller is lost.
- On-board battery maintains the real-time clock setting and the engine start time delay.

Panels

Basic indicator panel:
Source available/connected LED indicators
Test/exercise/bypass buttons

Digital display: Standard

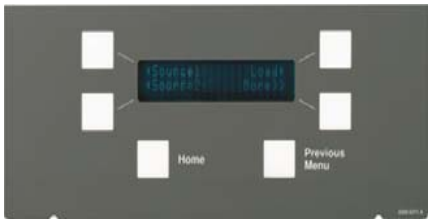

Analog bar graph meter display: optional (D009)

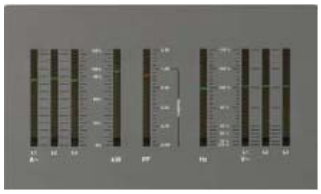

Control functions: Level 2 control

Open transition (in-phase)

Open transition (programmed)

Closed transition: **Includes fail-to-disconnect timer to prevent extended paralleling with the utility**

Utility-to-genset applications

Utility-to-utility applications

Genset-to-genset applications

Software adjustable time delays:
Engine start: 0 to 120 sec
Transfer normal to emergency: 0 to 120 sec
Re-transfer emergency to normal: 0 to 30 min
Engine stop: 0 to 30 min
Programmed transition: 0 to 60 sec

Undervoltage sensing: **3-phase normal, 3-phase emergency**
Accuracy: ±2%
Pickup: 85% to 98% of nominal voltage
Dropout: 75% to 98% of pickup setting
Dropout time delay: 0.1 to 1.0 sec

Overvoltage sensing: **3-phase normal, 3-phase emergency**
Accuracy: ±2%
Pickup: 95% to 99% of dropout setting
Dropout: 105% to 135% of nominal voltage
Dropout time delay: 0.5 to 120 sec

Over/under frequency sensing: **Normal and emergency**
Accuracy: ±0.05Hz
Pickup: ±5% to ±20% of nominal frequency
Dropout: ±1% beyond pickup
Dropout time delay: 0.1 to 15.0 sec

Voltage imbalance sensing:
Dropout: 2% to 10%
Pickup: 90% of dropout
Time delay: 2.0 to 20.0 sec

Phase rotation sensing:
Time delay: 100 msec
Loss of single phase detection
Time delay: 100 msec

Loss of single phase detection:
Time delay: 100 msec

Programmable genset exerciser: **Eight events/schedules with or without load**

PowerCommand control (continued)

Time-delay functions

Engine start: Prevents nuisance genset starts due to momentary power variation or loss. Not included in utility-to-utility systems.

Transfer normal to emergency: Allows genset to stabilize before application of load. Prevents power interruption if normal source variation or loss is momentary. Allows staggered transfer of loads in multiple transfer switch systems. For genset-to-genset applications, delays transfer of load from lead to secondary generator.

Re-transfer emergency to normal: Allows the utility to stabilize before re-transfer of load. Prevents needless power interruption if return of normal source is momentary. Allows staggered transfer of loads in multiple transfer switch systems. For genset-to-genset applications, delays re-transfer of load from secondary back to lead generator.

Engine stop: Maintains availability of the genset for immediate reconnection if the normal source fails shortly after transfer. Allows gradual genset cool-down by running unloaded. Not included in utility-to-utility applications.

Elevator pre-transfer signal: Requires optional relay signal module (M023). Delays transfer for pre-set interval of 0-60 seconds to prevent a power interruption during elevator operation.

User interfaces

Basic interface panel: LED indicators provide at-a-glance source and transfer switch status for quick summary of system conditions. Test and override buttons allow delays to be bypassed for rapid system checkout.

Digital display: The digital display provides a convenient method for monitoring load power conditions, adjusting transfer switch parameters, monitoring PowerCommand network status or reviewing transfer switch events. Password protection limits access to adjustments to authorized personnel. The digital display (M018) is standard on the BTPC.

User interface options

Bar graph meter display (D009): An LED bar graph display provides an easy-to-read indicator of the level of power being supplied to the load. Information displayed includes: 3-phase voltage and current, power factor, and kilowatts. Green, amber and red LEDs provide at-a-glance indication of system acceptability.

Front panel security key (M017): Locks front panel to prevent access to digital control settings. Prevents unauthorized activation of transfer or test functions.

Control options

Relay signal module (M023): Provides relay output contacts for sending information to the building monitoring and control system. Relay outputs include: Source 1 connected/available, Source 2 connected/available, not in auto, test/exercise active, failed to disconnect, failed to synchronize, failed to transfer/re-transfer, and elevator control pre-transfer signal.

Loadshed (M007): Removes the load from the emergency power source by driving the transfer switch to the neutral position when signaled remotely. Transfers load back to the emergency source when the signal contacts open. Immediately re-transfers back to the primary source when available. For utility-to-generator applications only.

PowerCommand network interface (M031): Provides connection to the PowerCommand network. LonWorks compatible for integration with building monitoring and control system.

Load power and load current monitoring (M022): Measures load phase and neutral, current, power factor, real power (kW) and apparent power (kVA). Warns of excessive neutral current resulting from unbalanced or nonlinear loads. Minimum current level detection is 3%.

Specifications

Voltage rating	600 VAC, 50 or 60 Hz
Arc interruption	Multiple leaf arc chutes provide dependable arc interruption.
Neutral bar	A full current-rated neutral bar with lugs is standard on enclosed 3-pole transfer switches.
Auxiliary contacts	Two isolated contacts (one for each source) indicating switch position are provided for customer use. Contacts are normally open, and close to indicate connection to the source. Wired to terminal block for easy access. Rated at 10 amps continuous at 250VAC maximum. UL recognized and CSA-certified.
Operating temperature	-40 ° F (-40 ° C) to 140 ° F (60 ° C)
Storage temperature	-40 ° F (-40 ° C) to 140 ° F (60 ° C)
Humidity	Up to 95% relative, non-condensing
Altitude	Up to 10,000 ft (3,000 m) without de-rating
Surge withstand ratings	Voltage surge performance and testing in compliance with the requirements of IEEE C62.41 (Category B3) and IEEE C62.45.
Total transfer time (source-to-source)	Will not exceed 6 cycles at 60 Hz with normal voltage applied to the actuator and without programmed transition enabled.
Manual operation	External manual operator is provided via the bypass and isolation mechanism, providing quickmake/quick-break operation under load.

Certifications

	All switches are UL 1008 listed and labeled, with UL-type rated cabinets and UL-listed CU-AL terminals.		All switches comply with NFPA 70, 99 and 110 (Level 1 systems).
	All switches are certified to CSA 178.1-07 Requirements for Transfer Switches.		All switches comply with NEMA ICS 10.
	Suitable for use in emergency, legally required and standby applications per NEC 700, 701 and 702.		All switches comply with IEEE 446 Recommended Practice for Emergency and Standby Power Systems.
	This transfer switch is designed and manufactured in facilities certified to ISO9001.		

Transition modes

Open transition/programmed: Controls the time required for the device to switch from source to source, so that the load-generated voltages decay to a safe level before connecting to an energized source. Recommended by NEMA MG1 to prevent nuisance-tripping breakers and load damage. Adjustable 0-10 seconds, default 0 seconds. Programmed transition is standard on 150-1000 amp switches, and optional on 1200-4000 amps.

Open transition/in-phase: Initiates open transition transfer when in-phase monitor senses both sources are in phase. Operates in a break-before-make sequence. Includes ability to enable programmed transition as a back-up on 150 – 1000 amp switches and 1200 – 4000 amp switches that support programmed or closed transition. If sources are not in phase within 120 seconds, the system will transfer using programmed transition.

Closed transition: Used in applications where loads are sensitive to the momentary power interruption that occurs when performing open transition between sources. Closed transition is accomplished by briefly (<100 msec) paralleling two good sources to eliminate the momentary break in the power supply.

Genset-to-genset: Either genset can be designated as the lead genset. If the lead genset goes down or is taken offline, the transfer switch starts the second genset and transfers the load. The control can be programmed to alternate between the two gensets at a set interval up to 336 hours (2 weeks).

* Not available on 1200 amp and 4000 amp.

UL withstand and closing ratings

The transfer switches listed below must be protected by circuit breakers or fuses. Referenced drawings include detailed listings of specific breakers or fuse types that must be used with the respective transfer switches. Consult with your distributor/dealer to obtain the necessary drawings. Withstand and Closing Ratings (WCR) are stated in symmetrical RMS amperes.

Transfer switch ampere	MCCB protection			Current limited breaker protection		
	WCR at volts max with specific manufacturers MCCBs	Max MCCB rating	Drawing reference	With specific current limiting breakers (CLB)	Max CLB rating	Drawing reference
150, 225, 260	30,000 at 480 25,000 at 600	400 A	A048E955	200,000 at 480	400 A	A051D533
				100,000 at 600	100,000 at 600	
300, 400, 600	65,000 at 480 65,000 at 600	1200 A	A051A578	200,000 at 480	1200 A	A048J544
				100,000 at 600	100,000 at 600	
800, 1000	65,000 at 480 65,000 at 600	1400 A	A048L248	200,000 at 480	1400 A	A048J546
				100,000 at 600	100,000 at 600	
1000, 1200 (closed transition)	85,000 at 480 65,000 at 600	1600 A	0098-7312	85,000 at 480	1600 A	Use MCCB ratings
				65,000 at 600	65,000 at 600	
1600, 2000	100,000 at 480 65,000 at 600	4000 A	Use 3 Cycle Ratings	100,000 at 480 65,000 at 600	4000 A	Use 3 Cycle Ratings
3000	100,000 at 480 65,000 at 600	4000 A	Use 3 Cycle Ratings	100,000 at 480 65,000 at 600	4000 A	Use 3 Cycle Ratings
4000	100,000 at 480 85,000 at 600	5000 A	0098-8576	100,000 at 480	5000 A	Use MCCB ratings
				85,000 at 600	85,000 at 600	

Fuse protection

Transfer switch ampere	WCR at volts max. with current limiting fuses	Max fuse, size and type	Drawing reference
150, 225, 260	200,000 at 600	600 A Class J, RK1, RK5 or 1200 A Class L, T	A048E955
300, 400, 600	200,000 at 600	600 A Class J, RK1, RK5 or 1200 A Class L, T	A051A578
800, 1000	200,000 at 600	600 A Class J, RK1, RK5, 1200 A Class T, or 2000 A Class L	A048L248
1200	200,000 at 480	2000 A Class L	0098-7312
	150,000 at 600		
1600, 2000	200,000 at 480	2500 A Class L	NA
3000	200,000 at 480	4000 A Class L	NA
4000	200,000 at 480	6000 A Class L	0098-8576
	150,000 at 600		

3-cycle ratings

Transfer switch ampere	WCR at volts max 3-cycle rating	Max MCCB rating	Drawing reference
1200	50,000 at 480	1600 A	0098-7312
	42,000 at 600		
1600, 2000	100,000 at 480	4000 A	N/A
3000	100,000 at 480	4000 A	N/A
4000	100,000 at 480	5000 A	0098-8576
	85,000 at 600		

Transfer switch lug capacities

All lugs accept copper or aluminum wire unless indicated otherwise.

Amp rating	Cables per phase	Size
150, 225	1	#6 AWG to 300 MCM
260	1	#6 AWG to 400 MCM
150, 225, 260[1]	1	#4 AWG to 500 MCM
300, 400	1	#3/0 AWG to 600 MCM
300, 400	2	#3/0 AWG to 250 MCM
300, 400[1]	2	#2 AWG to 600 MCM
600	2	250 MCM to 500 MCM
600[1]	2	#2 AWG to 600 MCM
800, 1000	4[2]	250 MCM to 500 MCM
800, 1000[1]	3	300 MCM to 750 MCM
1200	4	#2 AWG to 600 MCM
1600, 2000	8	#2 AWG to 600 MCM (lugs optional)
3000	8	#2 AWG to 600 MCM (lugs optional)
4000	12	1/0 AWG to 750 MCM (lugs optional)

Note 1: Optional lug capacities on accessories spec sheet AC-166.
Note 2: Four-wire for neutral bar is 3-pole only.
Note 3: Mechanical and compression lugs are available as options

Submittal detail

Amperage ratings
- ☐ 150
- ☐ 225
- ☐ 260
- ☐ 300
- ☐ 400
- ☐ 600
- ☐ 800
- ☐ 1000
- ☑ 1200
- ☐ 1600
- ☐ 2000
- ☐ 3000
- ☐ 4000

Voltage ratings
- ☐ R038 190
- ☐ R021 208
- ☐ R022 220
- ☐ R023 240
- ☐ R024 380
- ☐ R025 416
- ☐ R035 440
- ☐ R026 480
- ☑ R027 600

Pole configuration
- ☑ A028 Poles - 3 (solid neutral)
- ☐ A029 Poles - 4 (switched neutral)

Frequency
- ☑ A044 60 Hertz
- ☐ A045 50 Hertz

Transfer mode
- ☑ A077 Open transition/in-phase
- ☐ A078 Open transition/programmed
- ☐ A079 Closed transition

Application
- ☑ A035 Utility-to-genset
- ☐ A036 Utility-to-utility
- ☐ A037 Genset-to-genset

System options
- ☐ A041 Single phase, 2-wire or 3-wire
- ☑ A042 Three phase, 3-wire or 4-wire

Enclosure
- ☑ B001 Type 1: Indoor use, provides some protection against dirt (similar to IEC type IP30)
- ☐ B002 Type 3R:Intended for outdoor use, provides some protection from dirt, rain and snow (similar to IEC type IP34)
- ☐ B003 Type 4: Indoor or outdoor use, provides some protection from wind-blown dust and water spray (similar to IEC type IP65)
- ☐ B004 Open Construction: No enclosure - includes automatic transfer switch and controls (call factory for dimensions)
- ☐ B010 Type 12: Indoor use, some protection from dust (similar to IEC type IP61)
- ☐ B025 Type 4X: Stainless steel, indoor or outdoor use, provides some protection from corrosion (similar to IEC Type IP65)

Standards
- ☑ A046 UL 1008/CSA certification
- ☐ A064 NFPA 20 compliant (not available 1200-4000 amp switches)
- ☐ A080 Seismic certification

Control options
- ☐ M017 Security key - front panel
- ☑ M022 Load monitoring (min current level 3%)
- ☑ M023 Relay signal module. Includes pre-transfer module for elevator control
- ☑ M031 LonWorks Network Communications Module FTT-10

Meter
- ☑ D009 Analog bar graph meter

Battery chargers
- ☐ K001 2 A, 12/24 V
- ☐ KB59 15 A, 12 V
- ☐ KB60 12 A, 24 V

Protective relays
- ☐ M045 Paralleling timer and lockout relays, ANSI/IEEE 62PL and 86
- ☐ M046 Paralleling timer and lockout and reverse power relays, single phase, ANSI/IEEE 62PL, 86 and 32R
- ☐ M047 Paralleling timer and lockout and reverse power relays, three phase, ANSI/IEEE 62PL, 86 and 32R

Auxiliary relays

Relays are UL listed and factory installed. All relays provide two normally closed isolated contacts rated 10 amps at 600 VAC Relay terminals accept from one 18 gauge to two 12 gauge wires per terminal.

- ☑ L101 24 VDC coil - installed, not wired (for customer use)
- ☐ L102 24 VDC coil - emergency position - relay energized when switch in source 2 (emergency) position
- ☐ L103 24 VDC coil - normal position - relay energized when switch in source 1 (normal) position
- ☐ L201 12 VDC coil - installed, not wired (for customer use)
- ☐ L202 12 VDC coil - emergency position - relay energized when switch in source 2 (emergency) position
- ☐ L203 12 VDC coil - normal position - relay energized when switch in source 1 (normal) position

Miscellaneous options

- ☐ M003 Terminal block - 30 points (not wired)
- ☐ M007 Loadshed - from emergency - drives switch to neutral position when remote signal contact closes (utility-to-genset only)
- ☐ N009 Power connect - bus stabs (150-1000 amp open construction only)

Optional lug kits

- ☐ N046 Mechanical lugs – accept up to 8 #2 - 600 MCM cables per phase (1600-3000 amps only)
- ☐ N047 Mechanical lugs – accept up to 8 750 MCM cables per phase (1600-3000 amps only)
- ☐ N050 Compression lugs – accept up to 8 500 MCM cables per phase (1600-3000 amps only)
- ☐ N051 Compression lugs – accept up to 8 600 MCM cables per phase (1600-3000 amps only)
- ☐ N052 Compression lugs – accept up to 8 750 MCM cables per phase (1600-3000 amps only)
- ☐ N056 Mechanical lugs – accept up to 12 750 MCM cables per phase (4000 amps only)

Warranty

- ☐ G010 Years 0-2: Parts, labor and travel
  Years 3-5: Parts only
  Years 6-10: Main contacts only
- ☐ G013 Years 0-5: Comprensive
  Years 6-10: Main contacts only

Shipping

- ☐ A051 Packing - export box

Accessories

AC-166 Accessories specification sheet

Pro/ENGINEER

REL NO	LTR	NO	REVISION	DRN	CKD	APVD	DATE
ECO-103226	E	1	REDRAWN IN PRO/E; REVISE NOTES & TABLE	AWG	JM	LEWIS	27FEB09

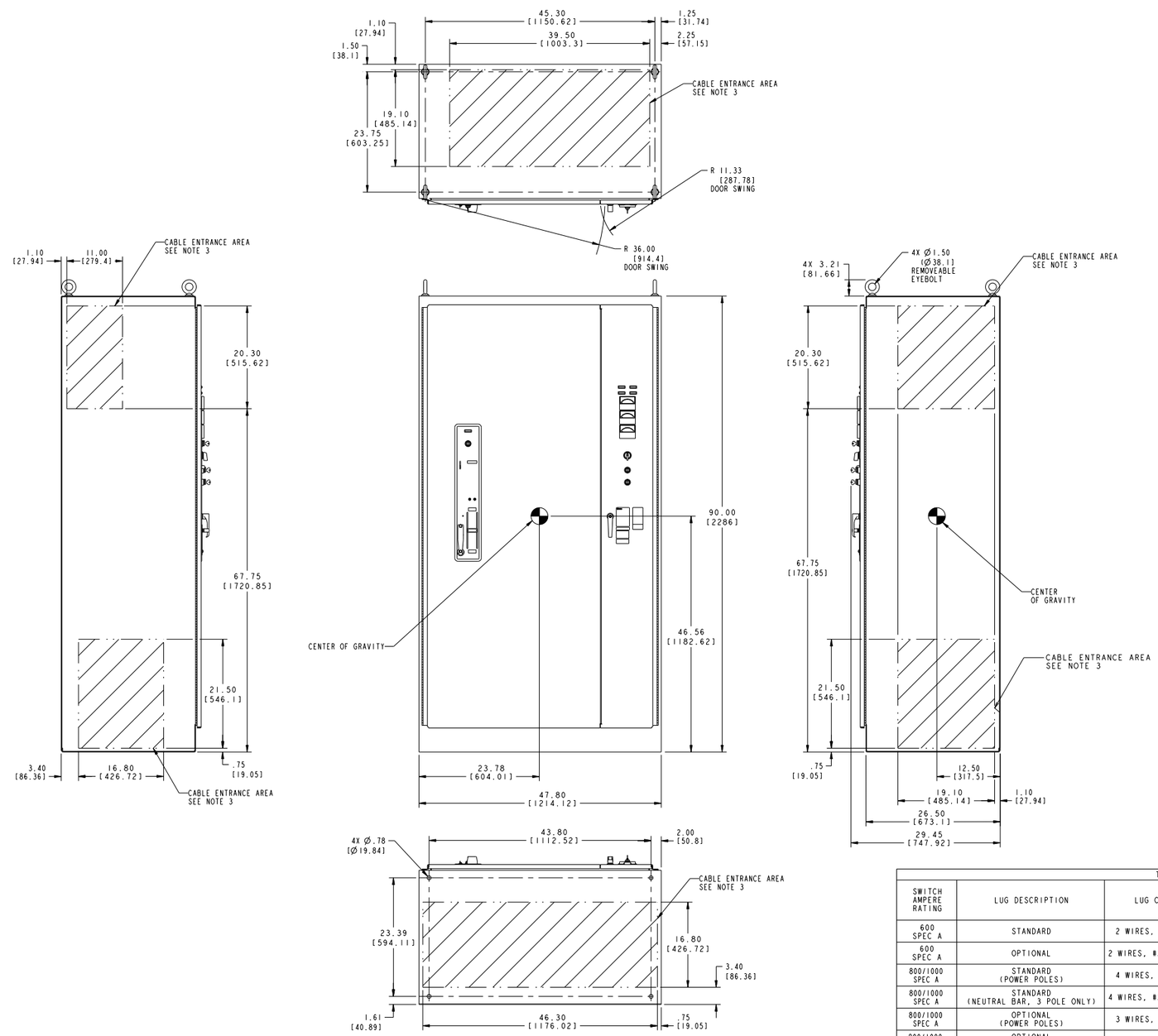

NOTES:

1. APPROXIMATE WEIGHT: 1097 POUNDS (497.6 KILOGRAMS).
2. DIMENSIONS IN [ ] ARE MILLIMETERS.
3. ALL CABLES SHALL ENTER CABINET IN AREAS INDICATED. DO NOT COMBINE CONTROL CABLES AND POWER CABLES IN THE SAME CONDUIT.
4. WIRE BENDING SPACE CONFORMS TO NATIONAL ELECTRIC CODE (NFPA70).
5. REFER TO THE NATIONAL ELECTRIC CODE FOR MINIMUM CLEAR SPACE IN FRONT OF THIS ENCLOSURE.
6. FOR INTERNAL DETAILS OF CABINET, SEE SHEET 2.
7. U.L. TYPE 1 CABINET

TABULATION

SWITCH AMPERE RATING	LUG DESCRIPTION	LUG CABLE CAPACITY	DIM A	DIM B	DIM C	DIM D	DIM E	DIM F	DIM G
600 SPEC A	STANDARD	2 WIRES, 250-500 MCM CU-AL	23.22 [589.79]	22.40 [568.96]	1.71 [43.43]	26.55 [674.37]	8.31 [211.07]	2.47 [62.74]	8.64 [219.41]
600 SPEC A	OPTIONAL	2 WIRES, #2 AWG-600 MCM CU-AL	21.10 [535.94]	20.23 [513.84]	1.71 [43.43]	24.43 [620.52]	8.31 [211.07]	2.47 [62.74]	8.64 [219.41]
800/1000 SPEC A	STANDARD (POWER POLES)	4 WIRES, 250-500 MCM CU-AL	22.25 [565.09]	22.25 [565.09]	2.53 [64.28]	-----	-----	-----	-----
800/1000 SPEC A	STANDARD (NEUTRAL BAR, 3 POLE ONLY)	4 WIRES, #2 AWG-600 MCM CU-AL	-----	-----	-----	25.33 [643.49]	7.01 [178.02]	3.13 [79.63]	8.39 [213.07]
800/1000 SPEC A	OPTIONAL (POWER POLES)	3 WIRES, 300-750 MCM CU-AL	22.25 [565.09]	22.25 [565.09]	2.53 [64.28]	-----	-----	-----	-----
800/1000 SPEC A	OPTIONAL (NEUTRAL BAR, 3 POLE ONLY)	4 WIRES, 1/0 AWG-750 MCM CU-AL	-----	-----	-----	25.33 [643.49]	7.01 [178.02]	3.13 [79.63]	8.39 [213.07]

UNLESS OTHERWISE SPECIFIED, ALL DIMENSIONS ARE IN MILLIMETERS

DIM	TOL	DIM	TOL
X ±1		0.00- 4.99	+0.15/-0.08
.X ±0.8		5.00- 9.99	+0.20/-0.10
.XX± 0.38		10.00-17.49	+0.25/-0.13
		17.50-24.99	+0.30/-0.13

ANG TOL: ± 1.0° SCALE: 1/1

DO NOT SCALE PRINT

CONFIDENTIAL - PROPERTY OF CUMMINS POWER GENERATION GROUP

DRN G COLLEEN
CKD J MORLEY
APVD L SMITH
DATE 06-12-07

FOR INFORMATION ONLY - DO NOT USE FOR ENGINEERING, MFG, OR CONSTRUCTION

FIRST USED ON DTPCD

CUMMINS POWER GENERATION

OUTLINE-CONTROL BOX

SITE CODE

PGF

REV E

0310_0570

SHEET 1 OF 2

SIZE C

Pro/ENGINEER

REL NO	LTR	NO	REVISION	DRN	CKD	APVD	DATE
ECO-103226	E	1	REDRAWN IN PRO/E; REVISE NOTES & TABLE	AWG	JM	LEWIS	27FEB09

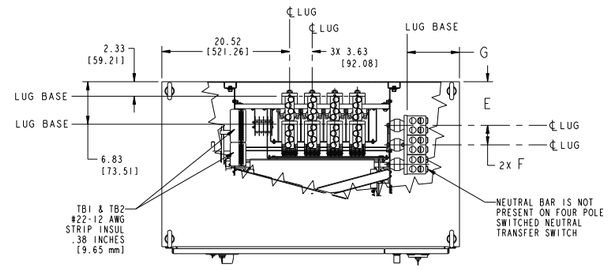

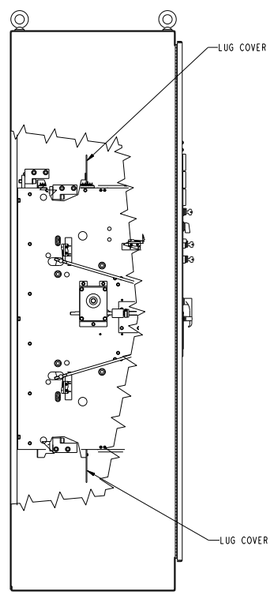

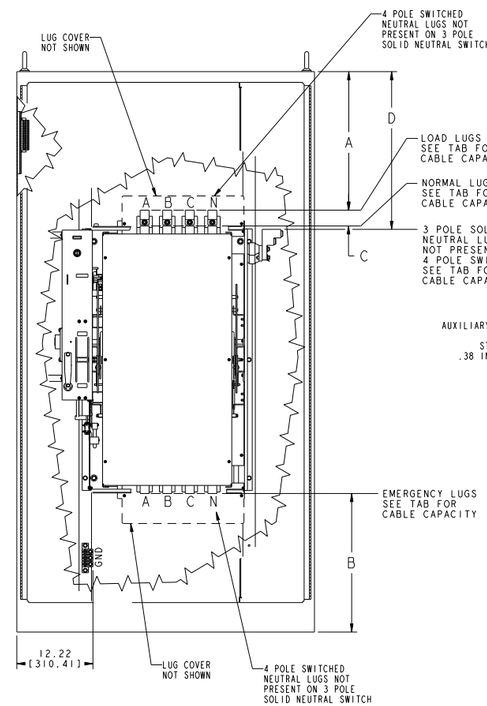

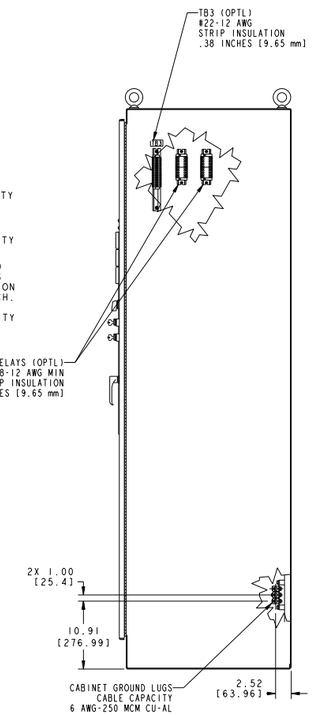

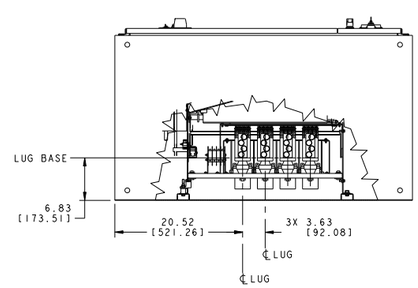

UNLESS OTHERWISE SPECIFIED, ALL DIMENSIONS ARE IN MILLIMETERS

DIM		
X ± 1	0.00- 4.99	+0.15/-0.08
.X ± 0.8	5.00- 9.99	+0.20/-0.10
.XX ± 0.38	10.00-17.49	+0.25/-0.13
	17.50-24.99	+0.30/-0.13

ANG TOL: ± 1.0° SCALE: 1/1

CHG IN: DO NOT SCALE PRINT

CONFIDENTIAL - PROPERTY OF CUMMINS POWER GENERATION GROUP

DRN G COLLEEN
CKD J MORLEY
APVD L SMITH
DATE 06-12-07

FOR INCORPORATION IN ELECTRONIC MFG. ASME Y14.34M-1994 DTPCD

FIRST USED ON

CUMMINS POWER GENERATION

OUTLINE-CONTROL BOX

SITE CODE

PGF

SIZE E 0310_0570

SHEET 2 of 2

REV E

REL NO	LTR	NO	REVISION	ZONE	DWN	CKD	APVD	DATE
ECO-110063	P	1	CHG RELAYS K10, K11 & K12, SEE ECO	D6,D5	GJT	VLO	J.KOCOVSKY	05APR11

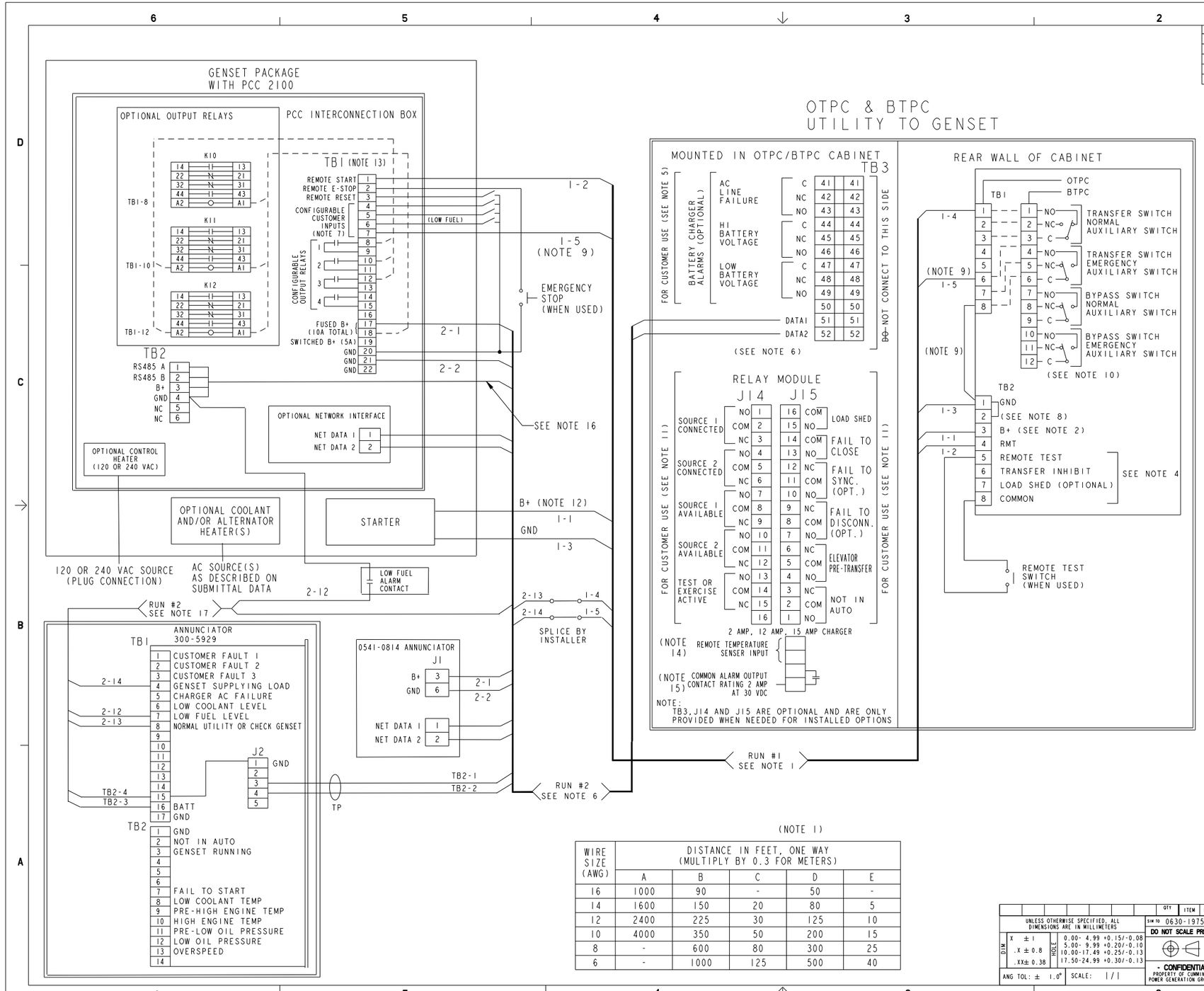

NOTES:

1. WIRE SIZES MUST BE AS FOLLOWS:
   RUN #1-GENSET TO TRANSFER SWITCH-LEAD SIZE MUST BE INCREASED IF A BATTERY CHARGER IS INSTALLED IN THE SWITCH.

   WITH NO BATT CHARGER-LEADS 1-1, -2, -3, -4, -5 USE COL A.

   WITH 2 AMP CHARGER, MAXIMUM VOLTAGE DROP OF 1.5 VOLTS, LEADS 1-1, &1-3 USE COL B.

   WITH 12/15 AMP CHARGER MAXIMUM VOLTAGE DROP OF 1.5 VOLTS, LEADS 1-1 & 1-3 USE COL. C.

   WITH 2 AMP CHARGER, MAXIMUM VOLTAGE DROP OF 0.75 VOLTS, LEADS 1-1, &1-3 USE COL D.

   WITH 12/15 AMP CHARGER, MAXIMUM VOLTAGE DROP OF 0.75 VOLTS, LEADS 1-1, & 1-3 USE COL E. TO MEET THE NFPA110 REQUIREMENT TO RETURN A FULLY DISCHARGED BATTERY TO 100% OF IT'S AMPERE-HOUR RATING WITHIN 24 HOURS USE COL. E.

2. IF OPTC NETWORK CARD IS USED, YOU MUST CONNECT B+ OR EXTERNAL BATTERY-BACKED POWER TO OTPC/BTPC DIGITAL BOARD AT P27.21(B+) & P27.22(GND).

3. FOR MULTIPLE TRANSFER SWITCHES, DUPLICATE RUN #1 FOR EACH SWITCH. DAISY CHAIN CONNECTION IS ACCEPTABLE PROVIDED WIRE SIZE & DISTANCE TO THE LAST SWITCH MEET THE SPECS IN NOTE 1.

4. CONNECT AN OPEN DRY CONTACT BETWEEN THE APPLICABLE TERMINAL AND COMMON (TB2-8). FOR REMOTE TEST, TRANSFER INHIBIT AND LOAD SHED. CLOSE TO ACTIVATE.

5. CONTACTS RATED: 4 AMPS AT 30 VDC OR 120V MAX.

6. REFER TO CUMMINS 900-0529 POWERCOMMAND NETWORK INSTALLATION & OPERATION MANUAL FOR WIRING INSTRUCTIONS. WIRE SIZE & LENGTH. USE STRANDED TWISTED PAIR WIRES WHEN CONNECTING DATA1 & DATA2 TO NETWORK. PART NO. 0334-1350 OR EQUAL.

7. CONNECTIONS TO TB1-4 THRU 7 ON GENSET ARE FOR CUSTOMER USE AND MAY BE CONFIGURED TO DISPLAY CUSTOM ALARM MESSAGES ON GENSET CONTROL. LOW FUEL IS REQUIRED FOR NFPA110 COMPLIANCE.

8. INSTALL JUMPER BETWEEN TB2-1 & TB2-2.

9. THIS CONNECTION IS USED IF ATS POSITION DISPLAY IS DESIRED IN REMOTE ANNUNCIATOR & ATS DOES NOT HAVE NETWORK INTERFACE. CONFIGURABLE INPUT IS PROGRAMMED "EPS SUPPLYING LOAD" & BOUND TO ANNUNCIATOR OVER NETWORK.

10. TRANSFER SWITCH SHOWN CLOSED TO NORMAL BYPASS SWITCH SHOWN IN NEUTRAL POSITION.

11. CONTACTS RATED: 2 AMPS AT 30 VDC OR 0.60 AMPS AT 120 VAC.

12. CONFIGURATION SHOWN IS FOR ATS-MOUNTED BATTERY CHARGER. IF WALL-MOUNTED CHARGER IS USED, CONNECT B+ & GND FROM CHARGER DIRECTLY TO BATTERY.

13. MAXIMUM WIRE SIZE ON TB1 IS 12 AWG. WIRING MUST BE STRANDED.

14. USE THE INVENTER REMOTE TEMPERATURE PROBE (0193-0530).

15. THE FOLLOWING FAILS WILL CAUSE A BATTERY CHARGER ALARM OUTPUT:
    LOW BATTERY VOLTAGE, HIGH BATTERY VOLTAGE, LOW AC INPUT VOLTAGE, HIGH AC INPUT VOLTAGE OVERCURRENT, HIGH CHARGER TEMPERATURE, BATTERY FAILURE, HIGH BATTERY TEMPERATURE (NOT AVAILABLE ON 2 AMP CHARGER).

16. NETWORK CONNECTIONS: 18 GA TWISTED PAIR OR CAT 5 CABLE. TOTAL NETWORK LENGHT CANNOT EXCEED 4000 FEET. UP TO 20 NODES CAN BE CONNECTED TO THE NETWORK. (NOTE: ANY COMMUNICATIONS WIRE CONNECTED TO THE GENSET SHOULD BE STRANDED CABLE).

17. REFER TO 0900-0301 FOR INSTALLATION OF 0300-5929.

18. 0300-5929 COMMUNICATION ONLY AVAILABLE WITH PCC2100 SOFTWARE VERSION 2.400 OR HIGHER.

(NOTE 1)

WIRE SIZE (AWG)	DISTANCE IN FEET, ONE WAY (MULTIPLY BY 0.3 FOR METERS)				
	A	B	C	D	E
16	1000	90	-	50	-
14	1600	150	20	80	5
12	2400	225	30	125	10
10	4000	350	50	200	15
8	-	600	80	300	25
6	-	1000	125	500	40

QTY	ITEM	PART NO	DESCRIPTION OR MATERIAL

UNLESS OTHERWISE SPECIFIED, ALL DIMENSIONS ARE IN MILLIMETERS

DIM: X ± 1; .X ± 0.8; .XX ± 0.38

HOLE: 0.00- 4.99 +0.15/-0.08; 5.00- 9.99 +0.20/-0.10; 10.00-17.49 +0.25/-0.13; 17.50-24.99 +0.30/-0.13

ANG TOL: ± 1.0°

SCALE: 1/1

SIM TO 0630-1975

DO NOT SCALE PRINT

- CONFIDENTIAL - PROPERTY OF CUMMINS POWER GENERATION GROUP

DWN L KAPLAN

CKD L SMITH

APVD L SMITH

DATE 05-21-99

FOR INTERPRETATION OF DIMENSIONING AND TOLERANCING, SEE ASME Y14.5M-1994

FIRST USED ON OTPC/BTPC

SITE CODE PGF

CUMMINS POWER GENERATION
1400 73RD AVENUE NE, MINNEAPOLIS, MN 55432

WD-INTERCONNECTION

DWG SIZE D — 0630_1974 — SHEET 7 OF 10 — DWG REV P

Pro/ENGINEER

Drawing Name: 0630-1974 Revision: P
Part Name: 0630-1974 Revision: P
Sheet 7 of 11

MASON WEST, INC.
1601 E. Miraloma Ave. Placentia, CA 92870
TEL (714) 630 - 0701, FAX (714) 632 - 0302

SEISMIC CERTIFICATE OF COMPLIANCE

CUMMINS POWER GENERATION
OTPC, OTEC, OTPCSE, OTECSE, CHPC, OHPC & BTPC
AUTOMATIC & BY-PASS TRANSFER SWITCHES

QUALIFIED TO IBC 2009/2012, ASCE 7-10 & ICC AC-156
Sds = 2.17g, Ip = 1.5, Site Class D, z/h = 1.0

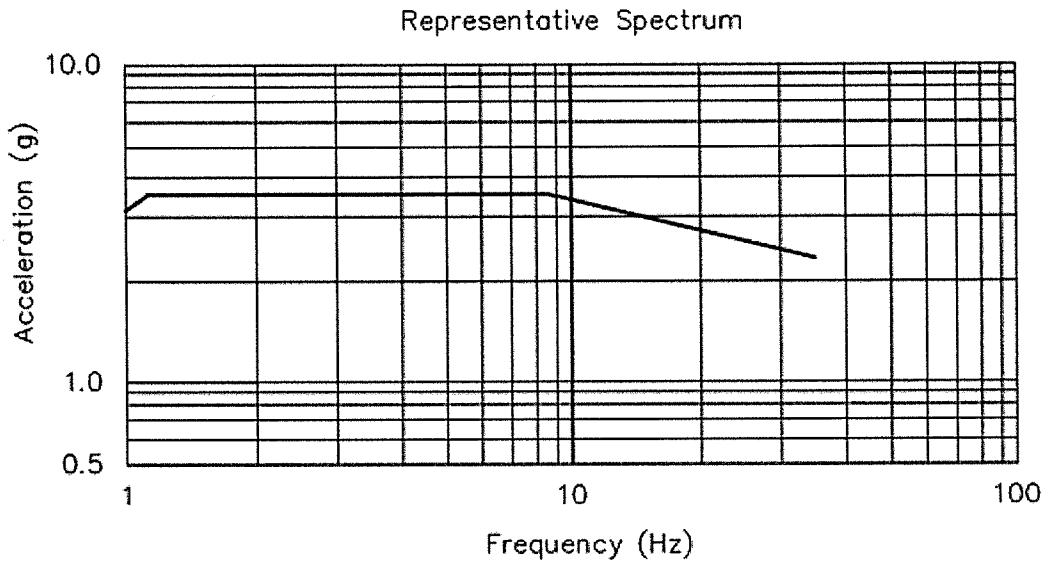

Reference Seismic Qualification Testing Reports:

1. Clark Dynamic Testing Laboratory Report No. T4374, T4418, T4683 & T4497
2. Environmental Testing Laboratory, Inc. Report No. ETL 11383 & 11383A

This is to certify that Mason West has reviewed the above referenced reports of the Seismic Qualification Test. The reports cover the testing data and results of the Automatic & By-Pass Transfer Switches provided by Cummins Power Generation. Each of the equipment represents the most seismically vulnerable construction in its product line platform. See Table 1A, 1B, 1C & 1D for certified models under this certification.

Mason West confirms that the equipment and the testing have complied with all of the requirements according to IBC 2009 / 2012 referencing ASCE 7-10 and ICC AC-156.

REGISTERED PROFESSIONAL ENGINEER
JIMMY Y.C. WONG
No. S4744
Exp. 12/31/2014
STRUCTURAL
STATE OF CALIFORNIA

Jimmy Wong, S.E.
Principal Structural Engineer
Mason West, Inc.
Issued Date: March 19, 2013

Cummins Part Number: A045V378

Enclosures: Table 1A, 1B, 1C & 1D for all certified models under this certification.

PowerCommand®
Remote Annunciator Panel
(LonWorks System annunciator)

> Specification sheet

Our energy working for you.™

Cummins® Power Generation

Description

The PowerCommand® Network Annunciator is a network component that provides remote system status indication for emergency and other power systems in compliance to the requirements of NFPA 110. The network annunciator may also be used for remote indication of any condition that is monitored by a PowerCommand Network.

The Network Annunciator reduces installation costs and improves design flexibility by use of a PowerCommand Network to transmit all the genset and transfer switch system signals rather than using relay contacts for this purpose.

Control power for PowerCommand Network products is usually derived from the genset starting batteries. The control functions over a voltage range from 8 VDC to 35 VDC.

Features

- Visual indication of 20 network conditions and network status.
- Audible indication of any network condition - Annunciator also includes pushbutton switch to silence the audible alarm. Alarm horn sound level is approximately 90 dB(A) at 30 cm.
- Standard NFPA 110 label, field configurable for other alarm and status conditions.
- Configurable for compliance to NFPA 99 requirements.
- Sealed membrane panel design provides environmental protection for internal components and is easy to clean.
- Warranty - PowerCommand Controls are supported by a worldwide network of independent distributors who provide parts, service and warranty support.
- UL Listed and labeled; CSA certified; CE marked.
- Wall mount NEMA 1 enclosure or flush mount configurations available.

S-1343e (9/07)

Specifications

Signal requirements

Network connections: Echelon® LonWorks®, twisted-pair 78 kbps, FT-10.

Control power: 8-30 VDC, 3.5 W (maximum) 0.8 W typical.

Wiring materials for network signals are UL Listed 4 twisted pair wiring. Terminations for control power accept wire up to 16 ga.

Environment

The annunciator is designed for proper operation in ambient temperatures from -40 °C to +70 °C (-40 °F to +158 °F) and for storage from -40 °C to +80 °C (-40 °F to +176 °F). Control will operate with humidity up to 95%, non-condensing and at altitudes up to 5000 m (13,000 ft).

Alarm Horn

Sound Level: 90 dB(A) at 30 cm

Physical

Weight: 1.45 kg (3.2 lbs) (board plus enclosure)

Power

Maximum Consumption: 5 W
Standby Consumption: 0.4 W or less
Network Length: Maximum 1400 m (4600 ft), when using NEMA Level 4 cable

Self-binding configurations - Supports use of up to four annunciators with up to one genset and one transfer switch.

Maximum wire lengths - control power-self-binding system

Wire size	12 VDC	24 VDC
22 ga	100 m (330 ft)	338 m (1100 ft)
20 ga	158 m (520 ft)	537 m (1760 ft)
18 ga	250 m (820 ft)	852 m (2790 ft)
16 ga	398 m (1300 ft)	1352 m (4430 ft)
14 ga	631 m (2070 ft)	1400 m (4600 ft)

Dimensions

Cut out detail (without enclosure)

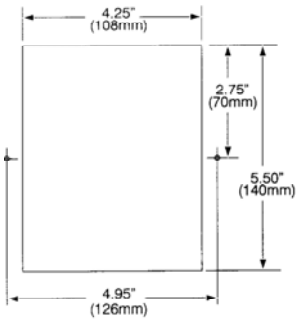

Annunciator enclosure

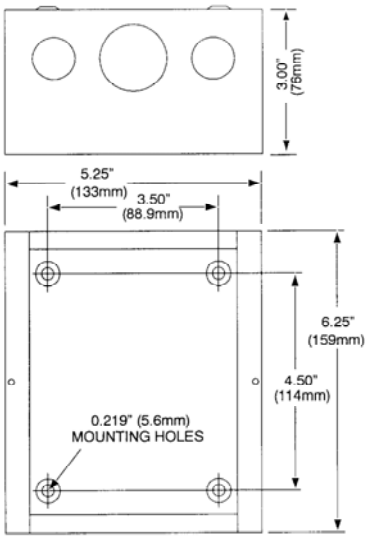

Dimensions: in (mm)

Our energy working for you.™

www.cumminspower.com

S-1343e (9/07)

Label configurations & standard bindings

NFPA 110 genset alarm and status annunciator

The following conditions are provided as standard on the annunciator:

- High battery voltage (A)
- Low battery voltage (A)
- Genset running (G)
- Genset supplying load (G)
- Pre-low oil pressure (A)
- Low oil pressure (R)
- Pre-high coolant temperature (A)
- High coolant temperature (R)
- Low engine temperature (A)
- Overspeed (R)
- Fail to start (overcrank) (R)
- Not in auto (R)
- Battery charger malfunction (A)
- Low fuel (A)
- Low coolant level (R)
- Spare (4) (G)
- Common alarm

(A) = Amber; (R) = Red; (G) = Green

Extended genset alarm and status annunciator

The following conditions are provided as standard on the annunciator:

- Check genset (R)
- Ground fault (A)
- High AC voltage (R)
- Low AC voltage (R)
- Under frequency (R)
- Overload (R)
- Over current (R)
- Short circuit (R)
- Reverse KW (R)
- Reverse kVAR (R)
- Fail to sync (A)
- Fail to close (R)
- Load demand (G)
- Genset CB tripped (R)
- Utility CB tripped (R)
- Emergency stop (R)
- Spare (4) (G)

(A) = Amber; (R) = Red; (G) = Green

8-Point (genset)

The following conditions are provided as standard on the annunciator:

- Check genset (A)
- Genset supplying load (A)
- Genset running (G)
- Not in auto (G)
- High/low engine temp (G)
- Low oil pressure (A)
- Low coolant level (R)
- Low fuel level (A)
- Spare (8) (G)

(A) = Amber; (R) = Red; (G) = Green

4-Point (genset)

The following conditions are provided as standard on the annunciator:

- Check genset (A)
- Genset supplying load (A)
- Genset running (G)
- Not in auto (G)
- Spare (16) (G)

(A) = Amber; (R) = Red; (G) = Green

ATS-extended

This annunciation set is often used with PLT-series equipment. The following conditions are provided as standard on the annunciator:

- Source 1 available (G)
- Source 2 available (G)
- Source 1 connected (G)
- Source 2 connected (G)
- Check ATS (R)
- ATS not in auto
- Test/exercise
- Transfer pending
- Load shed
- Transfer inhibit
- Fail to close
- Fail to disconnect
- Fail to synchronize
- Low battery-controller
- Low battery-network

(A) = Amber; (R) = Red; (G) = Green

ATS 8-point

The following conditions are provided as standard on the annunciator:

- Source 1 available (G)
- Source 2 available (G)
- Source 1 connected (G)
- Source 2 connected (G)
- Common alarm (A)
- Not in auto (R)
- Test/exercise mode (A)
- Low control battery (A)
- Spare (8) (G)

(A) = Amber; (R) = Red; (G) = Green

ATS 4-point

The following conditions are provided as standard on the annunciator:

- Source 1 available (G)
- Source 2 available (G)
- Source 2 connected (G)
- Source 1 connected (G)

(A) = Amber; (R) = Red; (G) = Green

Our energy working for you.™

www.cumminspower.com

S-1343e (9/07)

Custom alarm configuration

#	Color (R/Y/G)	Label	Horn (Y/N)	#	Color (R/Y/G)	Label	Horn (Y/N)
1				11			
2				12			
3				13			
4				14			
5				15			
6				16			
7				17			
8				18			
9				19			
10				20			

Ordering information

Part number	Description
0541-0814-01	Network annunciator, open construction, for panel mounting
0541-0814-02	Network annunciator including control box for surface wall mounting

See your distributor for more information.

Cummins Power Generation

Americas
1400 73rd Avenue N.E.
Minneapolis, MN 55432 USA
Phone: 763 574 5000 USA
Fax: 763 574 5298

Europe, CIS, Middle East and Africa
Manston Park Columbus Ave.
Manston Ramsgate
Kent CT 12 5BF United Kingdom
Phone 44 1843 255000
Fax 44 1843 255902

Asia Pacific
10 Toh Guan Road #07-01
TT International Tradepark
Singapore 608838
Phone 65 6417 2388
Fax 65 6417 2399

Our energy working for you.™

www.cumminspower.com

S-1343e (9/07)