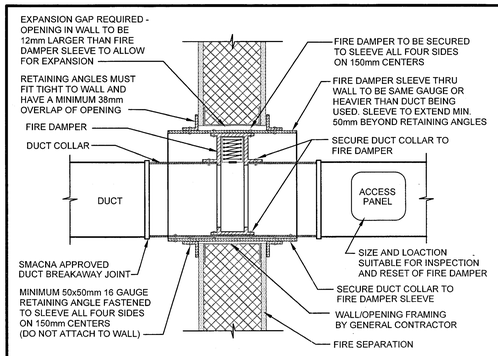

TYPICAL FIRE DAMPER

NOT TO SCALE

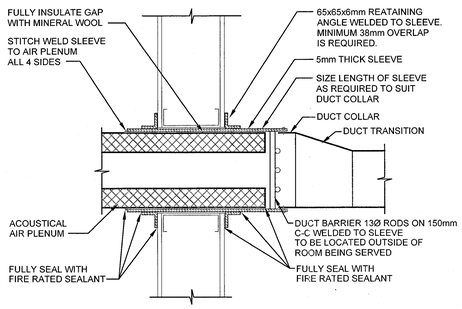

ACOUSTICAL PLENUM DUCT BARRIER INSTALLATION

NOT TO SCALE

ALL MATERIALS SHALL BE INSTALLED IN ACCORDANCE WITH THE "NAIMA" FIBROUS GLASS DUCT LINER INSTALLATION STANDARD.

NOTE:
ALL JOINTS TO BE CUT TO ASSURE TIGHT, GAPLESS FIT.

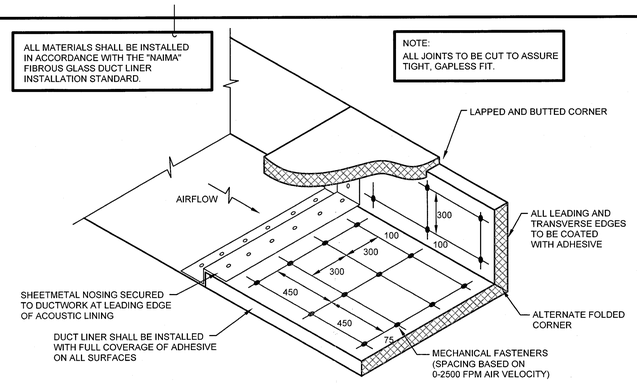

ACOUSTICAL LINING INSTALLATION

NOT TO SCALE

NOTE:
SIZING OF STEAM AND CONDENSATE PIPING TO BE AS PER MANUFACTURER'S RECOMMENDATIONS

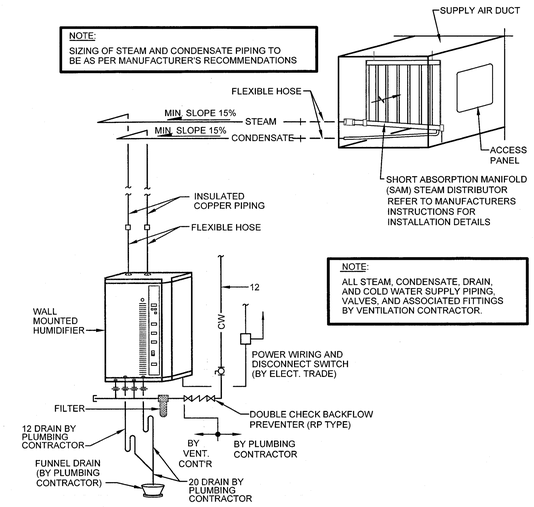

NOTE:
ALL STEAM, CONDENSATE, DRAIN, AND COLD WATER SUPPLY PIPING, VALVES, AND ASSOCIATED FITTINGS BY VENTILATION CONTRACTOR.

TYPICAL HUMIDIFIER PIPING

NOT TO SCALE

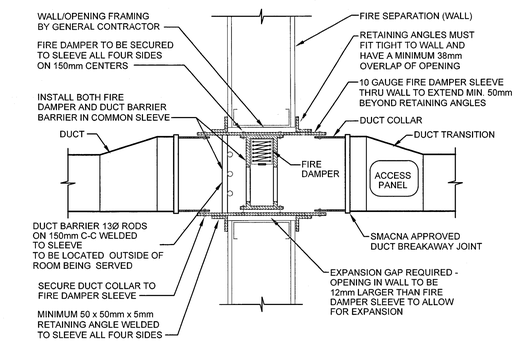

FREE AREA OF FIRE DAMPER TO MATCH FREE AREA OF ASSOCIATED DUCTWORK. INCREASE SIZE OF FIRE DAMPER AND PROVIDE DUCT TRANSITION AS REQUIRED.

FIRE DAMPER / SECURITY BAR INSTALLATION

NOT TO SCALE

NOTE:
ALL JOINTS ON DRAIN PAN ASSEMBLY TO BE SOLDERED WATER TIGHT.

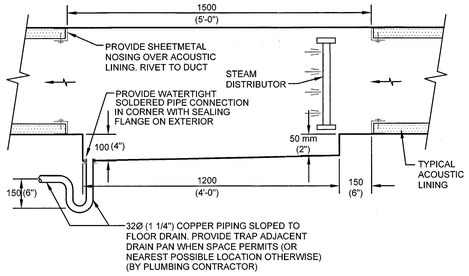

HUMIDIFIER DISTRIBUTOR DRAIN PAN

NOT TO SCALE

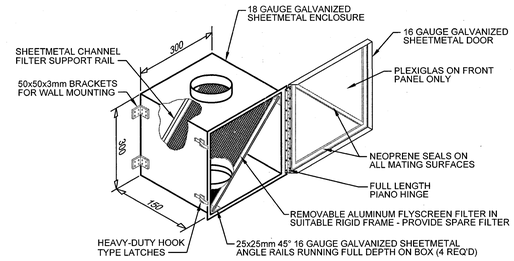

TYPICAL DRYER EXHAUST LINT TRAP

NOT TO SCALE

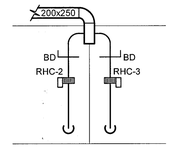

TYPICAL VENTILATION LAYOUT ROOM 166

NOT TO SCALE

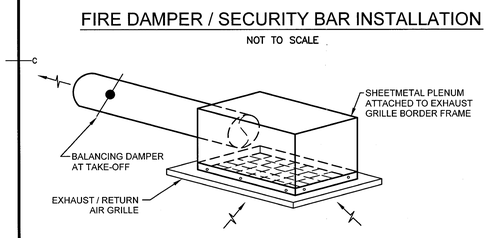

TYPICAL EXHAUST / RETURN GRILLE CONNECTION

NOT TO SCALE

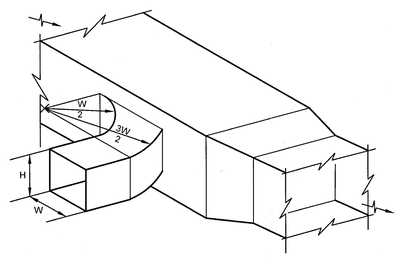

TYPICAL BRANCH DUCT TAKE-OFF

NOT TO SCALE

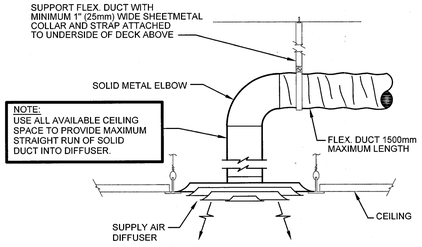

NOTE:
USE ALL AVAILABLE CEILING SPACE TO PROVIDE MAXIMUM STRAIGHT RUN OF SOLID DUCT INTO DIFFUSER.

TYPICAL SUPPLY AIR DIFFUSER

NOT TO SCALE

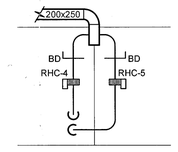

TYPICAL VENTILATION LAYOUT ROOM 169

NOT TO SCALE

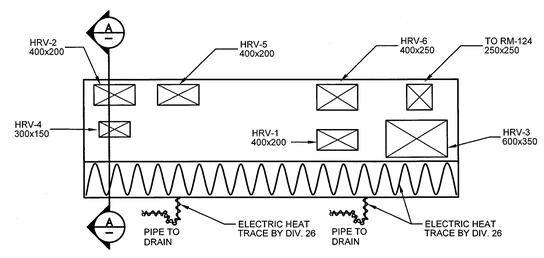

OUTDOOR AIR INTAKE PLENUM CONNECTION LAYOUT

SCALE: 1:25

0m 1m 2m 3m 4m 5m

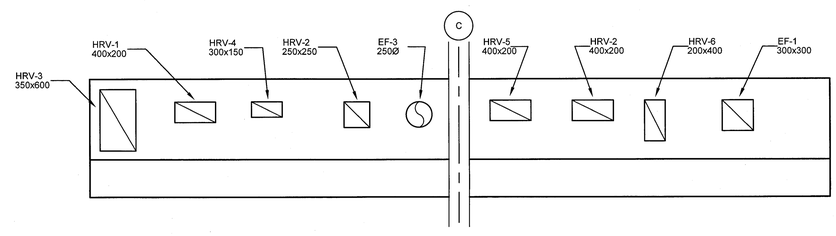

EXHAUST AIR PLENUM CONNECTION LAYOUT

SCALE: 1:25

0m 1m 2m 3m 4m 5m

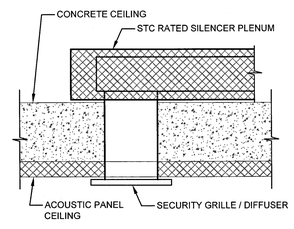

ROOM 160 DIFFUSER / GRILLE SECTION

NOT TO SCALE

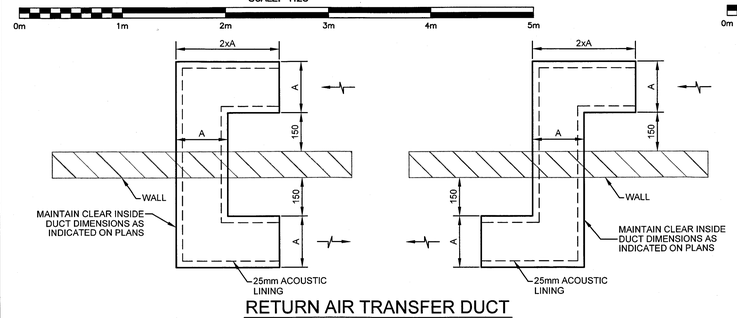

RETURN AIR TRANSFER DUCT

NOT TO SCALE

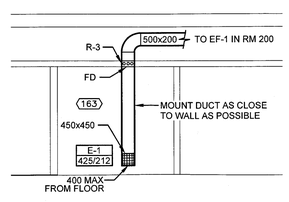

ROOM 163 EXHAUST AIR ELEVATION VIEW

SCALE : 1:100

0m 1m 2m 3m 4m 5m 6m 7m 8m 9m 10m

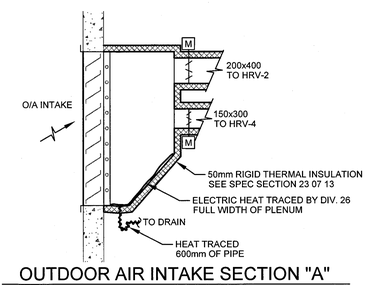

OUTDOOR AIR INTAKE SECTION "A"

SCALE : 1:20

0mm 500mm 1000mm 1500mm 2000mm 2500mm

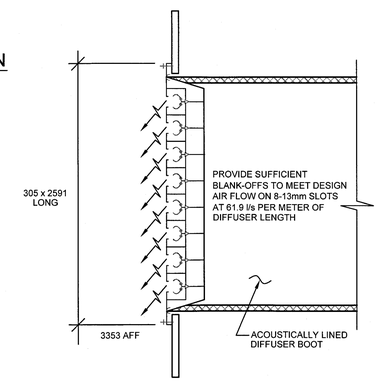

TYPICAL 13mm LINEAR SLOT DIFFUSER SECTION

NOT TO SCALE

Public Works and Government Services Canada / Travaux Publics et Services gouvernementaux Canada

exp Architects Inc.
t: +1.506.452.9000 | f: +1.506.459.3954
1133 Regent Street, Suite 300
Fredericton, NB E3B 3Z2
CANADA
www.exp.com

exp. Project No. FRE-00214763-A5

BUILDINGS · EARTH & ENVIRONMENT · ENERGY · INDUSTRIAL · INFRASTRUCTURE · SUSTAINABILITY

exp Services Inc.
t: +1.506.452.9000 | f: +1.506.459.3954
1133 Regent Street, Suite 300
Fredericton, NB E3B 3Z2
CANADA
www.exp.com

CONST. NORTH

KEY PLAN

SCALE – NTS

REGISTERED PROFESSIONAL ENGINEER Province of New Brunswick #M5761 Robert J. MacQuarrie Signature February 17, 2016 Date Province du Nouveau-Brunswick INGÉNIEUR INMATRICULÉ

revisions		date
0	RELEASED FOR CONSTRUCTION	01/29/2016

project / projet: NEW G.O.C.B SAINT–LÉONARD NEW BRUNSWICK

drawing / dessin: MECHANICAL DETAILS AND SECTIONS

designed / conçu: RWM
date: JANUARY 29, 2016
drawn / dessiné: SET
date: JANUARY 29, 2016
approved / approuvé: DAG
date: FEBRUARY 17, 2016
Tender / Soumission — PWGSC Project Manager / Administrateur de projets TPSGC

project number / no. du projet: R.069499.001

drawing no. / no. du dessin: 2301–3

PWGSC B1 (2004)

E-DRM/GDD-E: 535500 Version 1