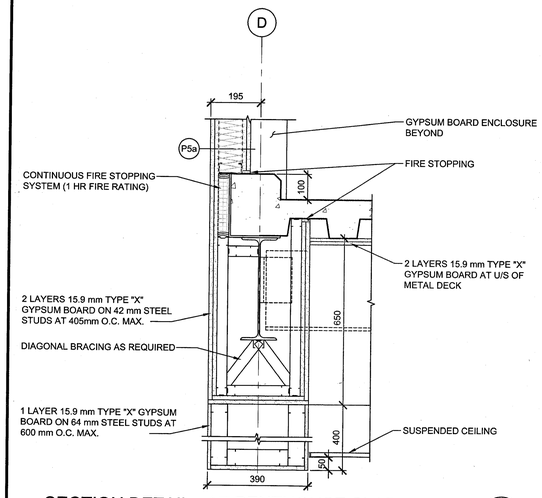

SECTION DETAIL - AT PENTHOUSE SLAB (1 / 304-2)

SCALE : 1:10

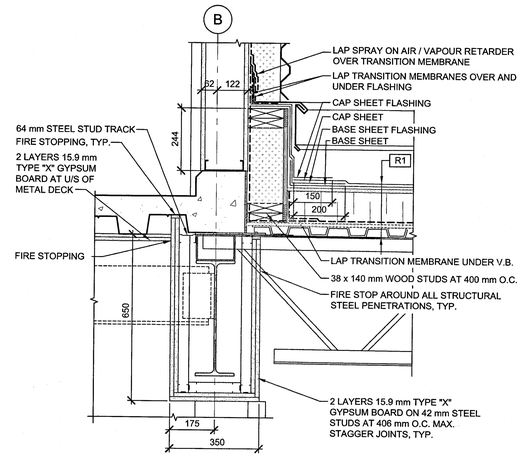

SECTION DETAIL - AT PENTHOUSE SLAB (2 / 304-2)

SCALE : 1:10

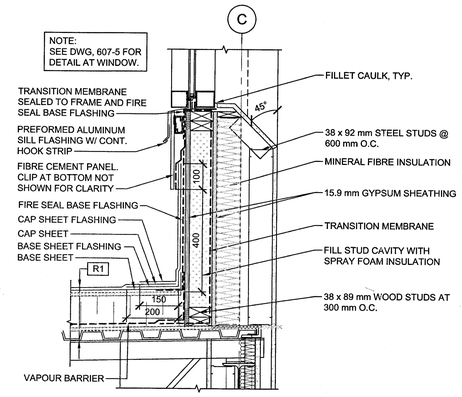

SECTION DETAIL - AT SPLINE WINDOWS (3 / 304-2)

SCALE : 1:10

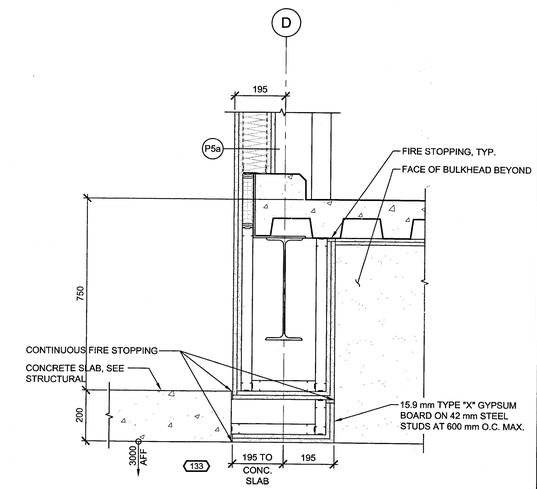

SECTION DETAIL - AT CONCRETE SLAB OVER RM 133 (4 / 304-2)

SCALE : 1:10

NOTE:
PROVIDE 12.7 mm CEMENT BOARD IN OVER OUTER LAYER OF GYPSUM BOARD FOR ALL EXPOSED SURFACES IN ROOM 163.

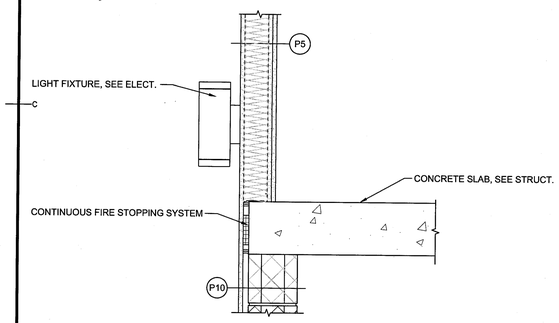

SECTION DETAIL - AT CORRIDOR 131 (5 / 304-2)

SCALE : 1:10

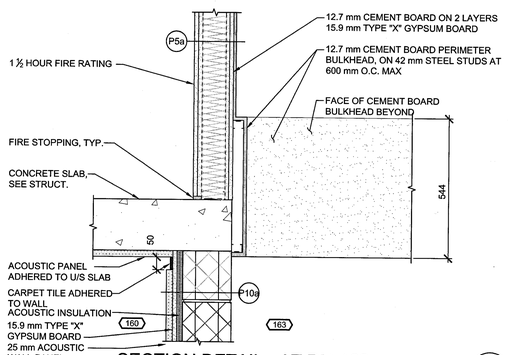

SECTION DETAIL - AT RM 163 (6 / 304-2)

SCALE : 1:10

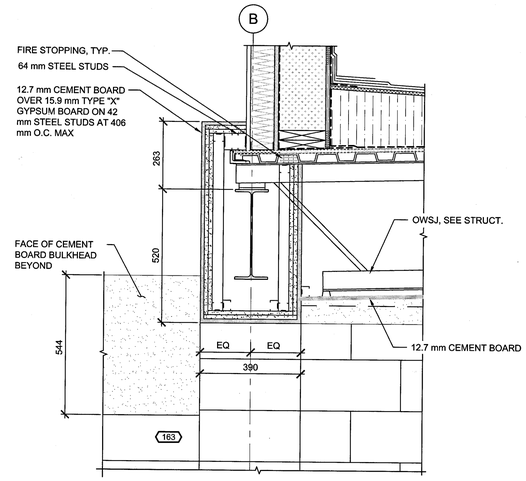

SECTION DETAIL - AT RM 163 (7 / 304-2)

SCALE : 1:10

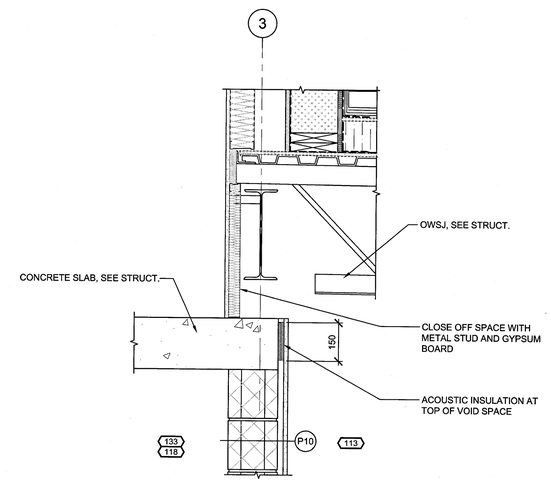

SECTION DETAIL - AT RMS 118 AND 133 (8 / 304-2)

SCALE : 1:10

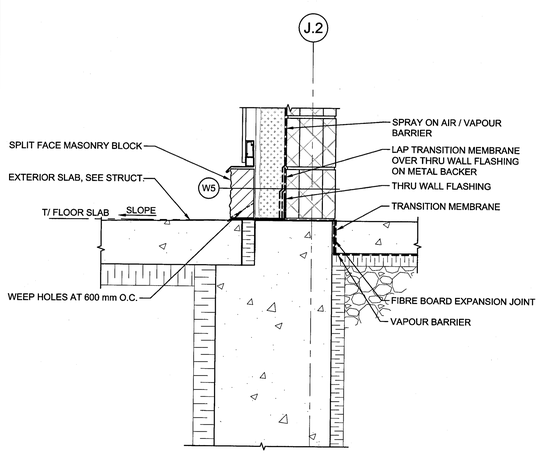

SECTION DETAIL - BASE AT FIBRE CEMENT SIDING (9 / 304-2)

SCALE : 1:10

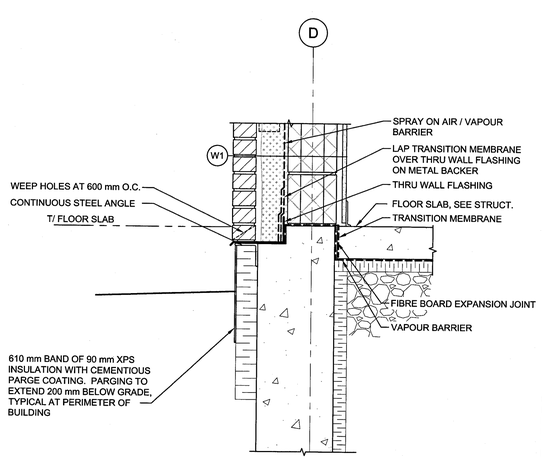

SECTION DETAIL - TYPICAL BASE AT BRICK (10 / 304-2)

SCALE : 1:10

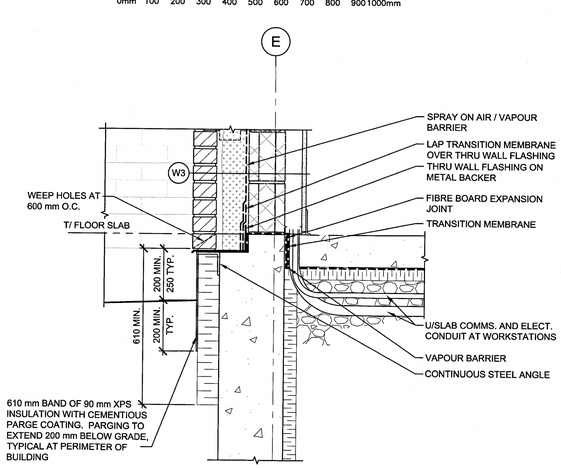

SECTION DETAIL - BASE AT W3 WALL (11 / 304-2)

SCALE : 1:10

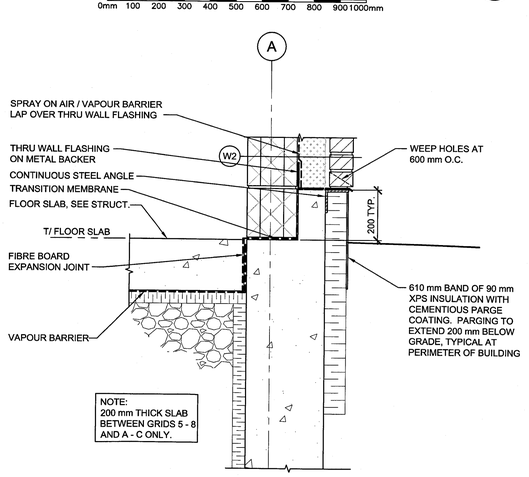

SECTION DETAIL - BASE AT THICKENED SLAB (12 / 304-2)

SCALE : 1:10

PWGSC B1 (2004)

E-DRM/GDD-E: 535500 Version 1

Public Works and Government Services Canada / Travaux Publics et Services gouvernementaux Canada

exp Architects Inc.
t: +1.506.452.9000 | f: +1.506.459.3954
1133 Regent Street, Suite 300
Fredericton, NB E3B 3Z2
CANADA
www.exp.com

exp. Project No. FRE-00214763-A5

BUILDINGS · EARTH & ENVIRONMENT · ENERGY · INDUSTRIAL · INFRASTRUCTURE · SUSTAINABILITY

GENERAL NOTES:

1. SEE DRAWING 201-7 FOR BELOW SLAB / BELOW GRADE FILL DETAILS.

22127 CERTIFICATE of PRACTICE 2016.02.17 Colin Turner exp ARCHITECTS INC. ARCHITECTS ASSOCIATION of NEW BRUNSWICK

revisions		date
0	RELEASED FOR CONSTRUCTION	01/29/2016

project / projet: NEW G.O.C.B SAINT–LÉONARD NEW BRUNSWICK

drawing / dessin: SECTION DETAILS

designed / conçu: CET
date: JANUARY 29, 2016
drawn / dessiné: BCF
date: JANUARY 29, 2016
approved / approuvé: DAG
date: FEBRUARY 17, 2016
Tender / Soumission: PWGSC Project Manager / Administrateur de projets TPSGC 2016/02/23

project number / no. du projet: R.069499.001

drawing no. / no. du dessin: 604–6