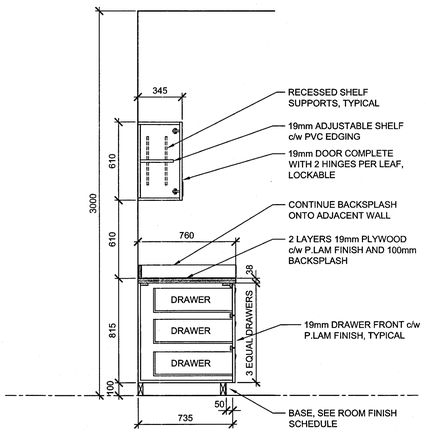

SECTION RMS 161, 162 — 1 / 606-7

SCALE : 1:20

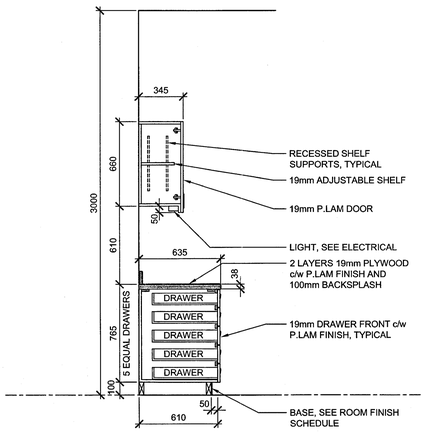

SECTION RM 171 — 2 / 606-7

SCALE : 1:20

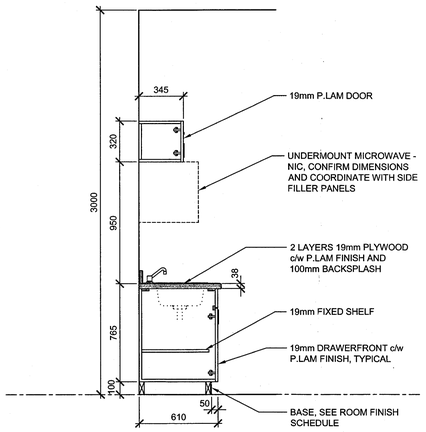

SECTION RM 171 — 3 / 606-7

SCALE : 1:20

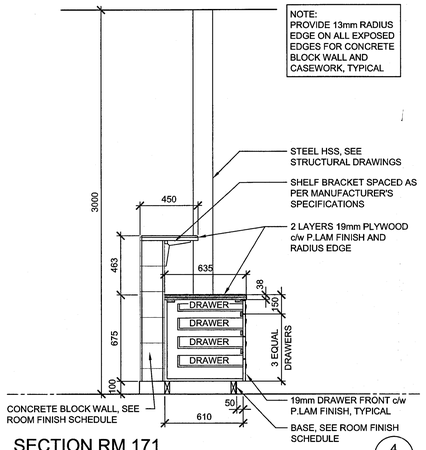

SECTION RM 171 — 4 / 606-9

SCALE : 1:20

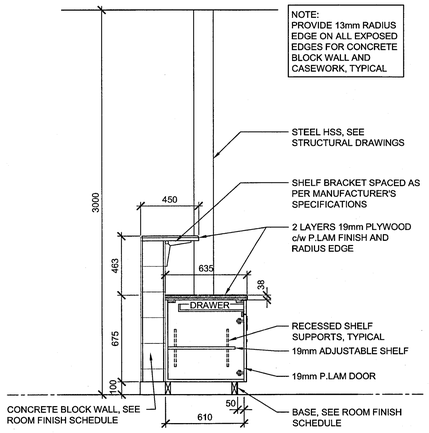

SECTION RM 171 — 5 / 606-9

SCALE : 1:20

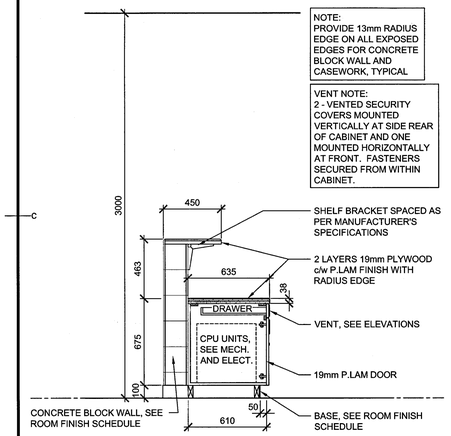

SECTION RM 171 — 6 / 606-9

SCALE : 1:20

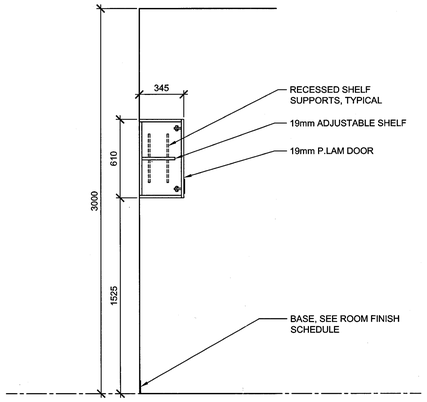

SECTION RM 138 AND 175 — 7 / 606-9&10

SCALE : 1:20

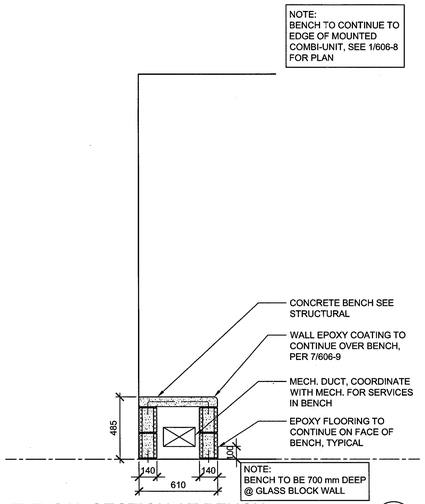

TYPICAL SECTION AT BENCH — 8 / 606-9

SCALE : 1:20

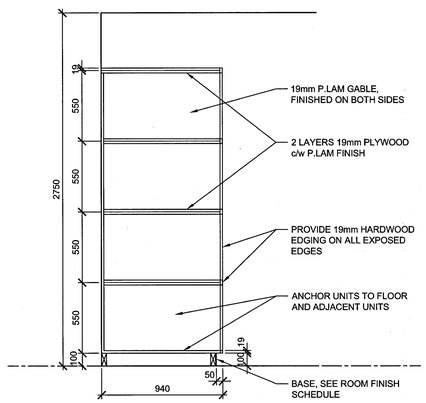

SECTION RM 141 — 9 / 606-10

SCALE : 1:20

NOT USED — 10

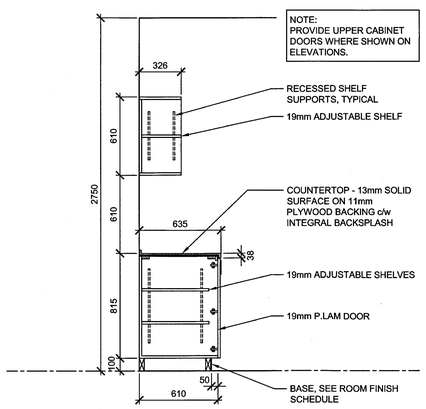

TYPICAL SECTION — 11

SCALE : 1:20

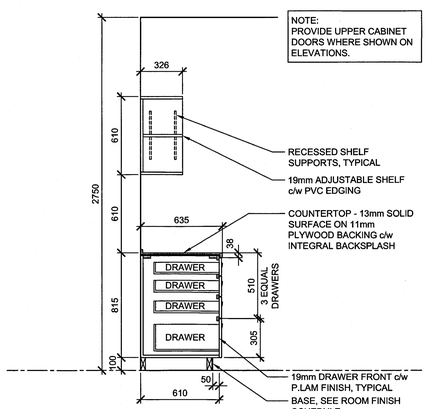

TYPICAL SECTION — 12

SCALE : 1:20

NOT USED — 13

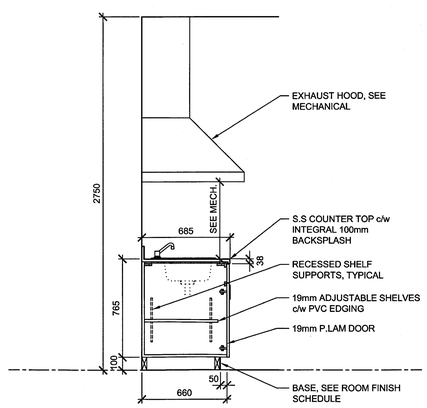

SECTION RM 132 — 14 / 606-11

SCALE : 1:20

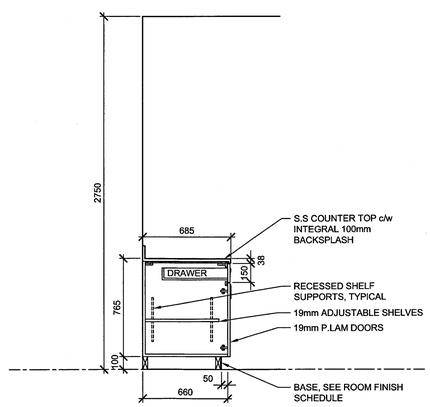

SECTION RM 132 — 15 / 606-11

SCALE : 1:20

GENERAL NOTES:

1. DRAWER UNITS AND UPPER CABINET ABOVE DRAWER UNITS ARE TO RECEIVE ACCENT COLOUR P.LAM FINISH. REFER TO ELEVATIONS FOR LOCATIONS OF ACCENT P.LAM COLOUR.
2. PROVIDE 25mm THICK ADJUSTABLE SHELVING FOR CABINET WIDTHS GREATER THAN 925 WIDE. SEE ELEVATIONS FOR LOCATIONS.

Public Works and Government Services Canada / Travaux Publics et Services gouvernementaux Canada

exp Architects Inc.
E: +1.506.452.9000 | F: +1.506.459.3954
1133 Regent Street, Suite 300
Fredericton, NB E3B 3Z2
CANADA
www.exp.com

exp. Project No. FRE-00214763-A5

BUILDINGS · EARTH & ENVIRONMENT · ENERGY · INDUSTRIAL · INFRASTRUCTURE · SUSTAINABILITY

22127 CERTIFICATE of PRACTICE 2016.02.17 Colin Turner exp ARCHITECTS INC. ARCHITECTS ASSOCIATION of NEW BRUNSWICK

revisions		date
0	RELEASED FOR CONSTRUCTION	01/29/2016

project / projet: NEW G.O.C.B SAINT–LÉONARD NEW BRUNSWICK

drawing / dessin: CASEWORK SECTIONS

designed / conçu: SJO/GAR/CET
date: JANUARY 29, 2016
drawn / dessiné: GB
date: JANUARY 29, 2016
approved / approuvé: DAG
date: FEBRUARY 17, 2016
Tender / Soumission: 2016/02/23
PWGSC Project Manager / Administrateur de projets TPSGC

project number / no. du projet: R.069499.001

drawing no. / no. du dessin: 606–13