Public Works and Government Services Canada | Travaux publics et Services gouvernementaux Canada

RETURN BIDS TO:
RETOURNER LES SOUMISSIONS À:

Bid Receiving - PWGSC / Réception des soumissions - TPSGC
11 Laurier St. / 11, rue Laurier
Place du Portage, Phase III
Core 0B2 / Noyau 0B2
Gatineau, Québec K1A 0S5
Bid Fax: (819) 997-9776

SOLICITATION AMENDMENT
MODIFICATION DE L'INVITATION

The referenced document is hereby revised; unless otherwise indicated, all other terms and conditions of the Solicitation remain the same.

Ce document est par la présente révisé; sauf indication contraire, les modalités de l'invitation demeurent les mêmes.

Comments - Commentaires

Vendor/Firm Name and Address
Raison sociale et adresse du fournisseur/de l'entrepreneur

Issuing Office - Bureau de distribution

Electrical & Electronics Products Division
11 Laurier St./11, rue Laurier
7B3, Place du Portage, Phase III
Gatineau, Québec K1A 0S5

Title - Sujet BATTERY,NONRECHARGEABLE	
Solicitation No. - N° de l'invitation W8486-163198/A	**Amendment No. - N° modif.** 001
Client Reference No. - N° de référence du client W8486-163198	**Date** 2016-02-26
GETS Reference No. - N° de référence de SEAG PW-$$HN-458-68900	
File No. - N° de dossier hn458.W8486-163198	**CCC No./N° CCC - FMS No./N° VME**
Solicitation Closes - L'invitation prend fin **at - à 02:00 PM** **on - le 2016-03-31**	**Time Zone** **Fuseau horaire** Eastern Standard Time EST
F.O.B. - F.A.B. **Plant-Usine:** ☐ **Destination:** ☑ **Other-Autre:** ☐	
Address Enquiries to: - Adresser toutes questions à: Lee, Carlos	**Buyer Id - Id de l'acheteur** hn458
Telephone No. - N° de téléphone (819) 420-0336 ( )	**FAX No. - N° de FAX** (819) 953-4944
Destination - of Goods, Services, and Construction: **Destination - des biens, services et construction:**	

Instructions: See Herein

Instructions: Voir aux présentes

Delivery Required - Livraison exigée	**Delivery Offered - Livraison proposée**
Vendor/Firm Name and Address **Raison sociale et adresse du fournisseur/de l'entrepreneur** **Telephone No. - N° de téléphone** **Facsimile No. - N° de télécopieur**	
Name and title of person authorized to sign on behalf of Vendor/Firm (type or print) **Nom et titre de la personne autorisée à signer au nom du fournisseur/ de l'entrepreneur (taper ou écrire en caractères d'imprimerie)** **Signature**	**Date**

Canada

Amendment 001 is raised to provide additional specifications and to extend the closing date as follows:

Closing Date:

INSERT:

March 31, 2016

DELETE:

March 2, 2016

All other terms and conditions remain unchanged.

BA-521/LS (AN/PRC-521)
NON RECHARGEABLE BATTERY SPECIFICATION

End User Equipment: **RT-5113/PRC-521**

Voltage and Capacity: .....**12 Volts nominal @ 3000 ma-H**

CELLS

Chemical System:.....**Lithium Sulphur Dioxide ($LiSO_2$)**

Cell Type:.....**A Type cell 1500 ma-H capacity @ 250 ma-H discharge**

Number of Cell:.....**8**

Cell Formation: .....**Two parallel rows of four cells in series**

Cell Manufacturer: .....**Contractor choice**

CELL CLUSTER

Safety Features:.....

1. **Each string must have anti charge Schottky diode (IN5822) or better specifications**
2. **The battery must contain a one time use thermal device that shall open between 87 and 93°C to prevent any catastrophic failure. The device shall be located as close as possible to the geometric centre of the cluster**
3. **The battery shall be short circuit protected. The re-settable fuse shall have a holding current of 1.5 to 1.95A and a series resistance of less than 0.08 ohms at ambient temperature. The re-settable fuse shall be capable of carrying a current of 1 A at 55°C. When shorted across the battery terminals with a total resistance less than 50 milliohms, there shall not be any damage to the battery. When the short is removed, the battery shall be able to meet the full discharge capacity**
4. **Cell cluster relief pressure system**
5. **The battery must have a mechanical Complete Discharge Device (CDD)**
6. **The battery must have a blocking mechanism to prevent electrical contact with the Ni-Cad battery charging terminals of the battery charger system (BCS) and to preclude the $LiSO_2$ battery full insertion in the battery tray pocket of the BCS**

Cell Vent Type: .....**Hermetic diaphragm type on negative end**

Pressure Relief System: .....**PVC encapsulated cell cluster with pressure relief tube connected to vent in case housing**

Pressure Relief Vent: .....**Bottom of housing**

Potting Filler: .....**The PVC encapsulated cell cluster is contained within the housing with epoxy potting**

Wire and Soldering:.....**Soldering shall conform to MIL-HDBK-454A Guideline 5 and J-STD-006A requirements for electronic grade solder alloy and fluxed and non-fluxed solid solders for electronic soldering applications. Wires shall be per MIL-DTL-16878G**

BATTERY

Battery Performance: .....**@ 20 deg C = 3 Amp-H and @ -30 deg C = 1.2 Amp-H**

Battery Operating Temp:....**-40 deg C to 55 deg C**

Battery Weight:.....**280 grams maximum**

Case Materials:.....**Polycarbonate #121 or ABS T-Grade (both approved)**

Case Constructions:.....**2 Piece case injection moulded**

Case Dimensions: .....**Length 75 ± 0.5 mm Width 38 ± 0.5 mm Height 70.6 ± 1.0 mm, see Figure 1**

Contact of Positive and Negative: Stainless Steel only

Contact Seal:.....**Watertight seal permanently bonded around the footprint of the positive (+) contact terminal to prevent water ingress**

Battery Shelf Life:.....**5 Years at 20 deg C (>85% of rated capacity)**

Non-operating Temp: .....**The battery shall show no evidence of breaking or cracking of the case or cover when subjected to thermal shock temperature cycling in the range of –59 deg C to 70 deg C**

Storage Characteristics: .....**The battery shall show no evidence of breaking, cracking or leakage of the case or cover when subjected to storage in the temperature range of –59 deg C to 70 deg C**

TABLE OF CONTENTS

FIGURE/ANNEX

1.0 SCOPE

This specification establishes the performance, design and test requirements for the non-rechargeable battery as part of the AN/PRC-521, Lightweight Assault Radio (LAR).

2.0 APPLICABLE DOCUMENT

The following documents form part of this specification to the extent specified herein. Copy of the following documents can be obtain from "Global Info Centre, 305-240 Ste Catherine, Ottawa Ontario, K2P 2G8, (613) 237-4250 or 1-800-567-1914, FAX (613) 237-4251".

STANDARDS:

Military

MIL-HDBK-454A	General Guidelines For Electronic Equipment (03 November 2000)
MIL-STD-810F	Environmental Engineering Considerations and Laboratory Tests, Notice 2 Change (30 August 2002)
MIL-STD-1472F	Human Engineering (23 August 1999)
MIL-PRF-49471B (CR)	Performance Specification Batteries, Non-Rechargeable, High Performance (Amendment 1, 25 April 2002)

Federal

FED-STD-595B	Federal Standard Colours Used In Government Procurement Change Notice 1 (January 11,1994)

SPECIFICATIONS

Military

MIL-F-14072C	Military Specification Finishes For Ground Based Electronic Equipment (04 October 1990)

CFTO

A-LM-117-001/FP-001	Transportation of Dangerous Materials by Canadian Forces Aircraft Ch 1(1996-12-01)

C-01-100-100/AG-006	Specification - Writing, Format And Production Of Technical Publications (1996-03-01)
C-02-008-001/TS-000	General Safety Lithium Batteries Handing, Storage, Preservation and Disposal Instructions Basic C/W Ch 1 (1995-02-08)
D-02-002-001/SG-001	Standard Identification Marking of Canadian Military Property Basic C/W Ch 3 (1992-02-04)
ISO 9002	Quality Systems – Model For Quality Assurance in Production and Installation
ISO 10012-1	Quality Assurance Requirements For Measuring Equipment (1992-01-15)

3.0 REQUIREMENTS

3.1 Non-Rechargeable Battery Definition

3.1.1 General Description. The non-rechargeable battery provides power to the AN/PRC-521. The non-rechargeable battery shall use lithium chemistry ($LiSO_2$).

3.1.2 Mission. The non-rechargeable battery shall provide operating power to the AN/PRC-521 Transceiver. The radio performance shall not be allowed to degrade due to the use of non-rechargeable battery.

3.1.3 Interface Definition. The non-rechargeable battery shall interface with the RT-5113/PRC-521 Transceiver, Light Assault Radio (LAR), and the AN/PRC-521 accessories carrying harness as per checklist L-53-757-000/LC-000. The non-rechargeable battery shall be designed to electrically and mechanically preclude the battery being charged by the Analyzer-Charger Battery Set, when inserted in MT-5321/G Battery Tray. A blocking mechanism shall be incorporated in the battery interface to prevent any connection with the IRIS battery charger.

3.1.4 Operational And Organizational Concepts. There are two non-rechargeable batteries per RT-5113/PRC-521 Transceiver, one in use and other as spare in the carrying harness.

3.2 CHARACTERISTICS

3.2.1 Performance Characteristics. The non-rechargeable battery shall meet or exceed the following characteristics.

3.2.1.1 First Article Cells Inspection. The cells used to manufacture the battery shall be tested in accordance with Section 4.4 of MIL-PRF-49471B including the cell series short circuit protection paragraph 4.7.10.8 and not show any of the problems listed in paragraph 3.4.4.2 of MIL-PRF-49471B. The cell sample size shall be as per paragraph 4.4.1.1 of MIL-PRF-49471B.

3.2.1.2 Battery. The battery shall be subjected to inspection and certification in accordance with Table II of MIL-PRF-49471B. The battery sample size shall be as per Table II, of MIL-PRF-49471B.

3.2.1.2.1 Battery Short Circuit Test. The batteries shall be tested for a short circuit as per paragraph 4.7.10.3 of MIL-PRF-49471B (CR). The batteries shall be inspected for compliance to the applicable requirements of paragraph 3.4.4.2 and 3.4.4.3.

3.2.1.2.2 Charge Protection. The batteries shall be fitted with a charge protection device and tested as per paragraph 4.7.10.6 of MIL-PRF-49471B (CR). The amount of reverse current shall not exceed 2.0 milliamperes in either leg of the battery.

3.2.1.3 Minimum Battery Life. The non-rechargeable battery shall meet the minimum discharge time indicated below at the ambient temperatures indicated for the LAR Transmit-Receive and standby duty cycles and at current levels indicated.

Minimum Life (hrs)	TX/RX/STANDBY	Ambient Temperature (deg C)
24	1:1:8	+55ºC
24	1:1:8	+20ºC
12	1:1:8	-20ºC
09	1:1:8	-30ºC

The maximum current draw of the RT-5113/PRC-521 in Transmit, Receive and Stand By Mode is 944mA, 60mA and 27mA respectively. Transmit and receive duration shall be 20 $\pm$ 1 seconds and standby duration shall be 160 $\pm$ 1 seconds. It is highly desirable that the battery exceeds the minimum requirement stated above, particularly for the cold temperature requirement.

3.2.1.4 Electrical Performance. The non-rechargeable battery shall meet the following electrical parameters.

3.2.1.4.1 Voltage. Battery voltage shall be 12 Volts nominal and 14 volts maximum. The non-rechargeable battery shall be protected from reverse/charging voltage application by an internal diode, IN5822 or equivalent. The battery cut-off voltage shall be 8.0 volts.

3.2.1.4.2 Current. The non-rechargeable battery shall be capable of supplying a peak current of 1A at a voltage of 9.5 V after being submitted to a load of 1 A for 45 seconds at room temperature.

3.2.1.5 Performance After Storage

3.2.1.5.1 Performance After Normal Storage. The battery shall retain at least 95% of its initial capacity following a storage period of 12 months at 20° C and 60% relative humidity from date of manufacture or shipment.

3.2.1.5.2 Performance After High Temperature Storage. The battery shall retain at least 80% of its initial capacity when discharged at +55° C and at least 35% of its initial capacity when discharged at –30° C, following a storage period of 4 weeks at +71° C and 60% relative humidity from date of manufacture or shipment.

3.2.1.6 Complete Discharge Device (CDD). The battery assembly shall be equipped with a mechanical CDD, rendering the battery non-reactive as per Para 3.4.5.2 in MIL-PRF-49471B. The CDD shall be covered with a non-tampering label as per Para 3.12.3 to provide a positive operability indication. The CDD shall be tested as per Para 4.7.10.7.

3.2.2 Physical Characteristics

3.2.2.1 Physical Construction. Physical construction of the non-rechargeable battery shall meet the physical construction requirements of MIL-PRF-49471B, paragraph 3.4. The non-rechargeable battery shall interface with the RT-5113/PRC-521 Transceiver battery contacts and the battery release catch.

3.2.2.1.1 Size. Dimensions of the non-rechargeable battery and the position of the terminals shall interface with the RT-5113/PRC-521 Transceiver and its carrying harness. (Connection to the RT-5113/PRC-521 Transceiver being through one of the two Width/Depth sides).

Height:	70.6 mm ± 1mm
Width:	75.0 mm ± 0.5mm
Depth:	38.0 mm ± 0.5mm

3.2.2.2 Weight. The maximum weight of the non-rechargeable battery shall be 280 grams.

3.2.2.3 Tools. No tools shall be required to insert the non-rechargeable battery onto the RT-5113/PRC-521 Transceiver. Activating the battery release catch of the LAR radio shall enable the non-rechargeable battery to be removed by hand; otherwise, the battery shall be secure in position attached to the Transceiver. The battery shall engage fully to the radio when torque to a maximum of 34 Inch-Pounds and shall not engage to the radio battery contacts when a torque force of 15 Inch Pounds is applied. The battery shall de-

engage completely the radio bayonet battery contacts when a torque of less than 30 Inch Pounds is applied in the other direction when the battery release catch is depressed.

3.2.2.3.1 Mounting Screws For Terminals. Two (2) mounting screws shall be furnished for the two (2) negative terminals and tightened to impede the sideways movement of the negative terminals.

3.2.2.4 Battery Case Pressure Relief. The battery case shall be provided with the means to safely release any liquids or gases that may vent from the component $LiSO_2$ cells.

3.2.2.5 Battery Terminal Water Seal. A neoprene O-ring seal shall snugly fit around the positive battery terminal footprint in such a manner as to form a water tight-seal around the positive terminal when the battery is inserted to the RT-5113/PRC-521 Transceiver.

3.2.2.6 Materials, Process and Parts. All vendor supplied materials and parts used in the manufacture of non-rechargeable battery shall be new (unused) and of controlled quality. The age of cells, from the time of their fabrication to the time of their presentation for acceptance inspection as batteries, shall be between 5 and 180 days. The non-rechargeable battery design and construction shall be in accordance with the established Electronic Industry Association practices and standards for this type of equipment. The design shall allow ease of operation of the radio equipment and shall be consistent with the requirements specified herein.

a. Casing: The non-rechargeable battery case shall be constructed of durable plastic;

b. Filling: The unused space within the non-rechargeable battery case shall be filled without interfering with proper function of the cell pressure-relief vent; and

c. Filling material: The use of filling material shall restrain and provide support for all components preventing any component or assemblies movement.

3.2.2.6.1 Insulation, Potting And Component Layout. The contractor shall describe in writing how the internal components used, the wire types and the placements of the wires have been designed to meet the specifications of the first article tests. The contractor shall demonstrate that the insulation material used around the cells and around the wires are adequate to prevent any short-circuit between the components during and after the stress tests. The contractor shall demonstrate that the potting material holding the cell components restrains the components from any movement inside the battery. No connections or bare wires shall be left un-insulated and all sharp edges shall be rounded to prevent break through of the insulation material.

3.2.2.6.2 Schematic, Pictorial And Diagrams. The contractor shall provide to the Crown Technical Authority:

a. A complete schematic of the battery;
   Layout diagrams of the battery and its internal components with their internal connections; and
b. Pictures of the battery's internal components with internal connections.

The layout diagrams and the pictures shall describe the internal wires used and the interconnections between the cells and the internal components. The layout diagrams and the pictures shall describe how the wires are routed (placement) inside the battery.

3.2.2.7 Workmanship. The workmanship shall be in accordance with MIL-HDBK-454A, Guideline 9.

3.2.2.8 Safety. The safety design considerations shall be in accordance with MIL-STD-1472F paragraph 5.13.5.4 and C-02-008-001/TS-000. The battery shall include a mechanism which prevents its connection to the Iris battery charger and a CDD as per MIL-PRF-49471B paragraph 3.4.5.2.

3.2.2.9 Colour And Finish. The non-rechargeable battery shall be coloured at the time of moulding, in accordance to standard industrial practices for good workmanship, rendering a smooth appearance. The finish shall conform to the latest issue of the following standards/specifications.

3.2.2.9.1 Colour. The selected colour of the finished coat shall be in accordance with the FED-STD-595B Colours, colour white mat # 37925.

3.2.2.9.2 Metal Surfaces. Metal surfaces shall be of the corrosion resistant type or shall be treated in accordance to MIL-F-14072C, type 1 (exposed).

3.2.3 Environmental Conditions

3.2.3.1 Environmental Requirements. Unless otherwise stated, all elements of the battery shall meet all environmental requirements specified herein. In general, the equipment life cycle shall encompass the environmental stress mechanisms both natural and induced for the following cases:

3.2.3.2 Environmental Extremes. Environmental testing shall be the sole responsibility of the contractor and shall be conducted in accordance with the First Article Test Plan, subject to the approval of the Technical Authority, and carried out as part of the battery first article qualification. In order to be capable of operating under all climatic environmental extremes encountered by Canadian Forces in Canada, and world wide in support of operations, including all maritime environments, the battery shall meet the following environmental extremes IAW MIL-STD-810F:

(a) High Temperature	Method 501.4, Procedure I, Table 501.4-II to +70°C Induced Conditions Non-Operating, 7 Cycles and Procedure II, Table 501.4-I to +49° C Ambient Air Conditions Operating, 1 Cycle;
(b) Low Temperature	Method 502.4, Procedure I, Table 502.4-I to –51°C Non-Operating, Exposure Duration 72 Hours and Procedure II, Table 502.4-II to –30°C Operating, Exposure Duration 24 Hours;
(c) Solar Radiation	Method 505.4, Procedure I, Figure 505.4-1 Worldwide Deployment Conditions to +49°C, Exposure 3 Cycles;
(d) Rain	Method 506.4, Procedure I at 10mm-Hour Rain With 18 m/s Wind, Figure 506.4-1 Exposure Time 24 Hours;
(e) Humidity	Method 507.4, Figure 507.4-1, Exposure Time and Levels Five 48 Hours Cycles at +60°C with Relative Humidity of 95±4%;
(f) Fungus	Method 508.4, Table 508.5-I U.S. Standard Fungus, Exposure Duration 28 Days;
(g) Salt Fog	Method 509.4, Figure 509.4.1, Exposure Duration, Four 24 Hours Cycles;
(h) Sand and Dust	Method 510.4, Procedure I In Concentration Of (a) 10±0.7g/m^3 With 8.9m/s Wind Speed For The Blowing Dust Test, Exposure Duration, 6 Hours at +23°C and 6 Hours at +49°C: (b) Procedure II 2.2±0.5g/m^3 With 18-29m/s Wind Speed for the Blowing Sand Test, Exposure Duration 90 Minutes Per Axis;
(j) Vibration	Method 514.5, Procedure I, Category 4, Item(s) Configuration as Restrained or Stacked Cargo: (a) Exposure Levels of Figure 514.5C-2 for a Duration of 16 Minutes per Axis; and (b) Exposure Levels of Figure 514.5C-4, for a Duration of 16 Minutes per Axis; and
(k) Shock	Method 516.5, Procedure I, Functional Shock Figure 516.5-10 for 1 Impact (in each plane) of Half Sine-Wave 20g Peak 11msec Duration and Procedure IV

Transit Drop Table 516.5-VI Height of Drop 100 cm, 1 Drop onto Smooth Concrete Floor for the High and Low temperature.

3.2.3.3 Performance Requirements. A quantity of 40 first article inspection batteries shall be submitted to the above environmental conditions, and shall meet the following requirements:

a. Visual Inspection. No evidence of physical damage that would cause a malfunction;

b. Battery Voltage. The environmental tests cannot cause more than a 4% decrease in voltage output measured at ambient temperature; and

c. Failure. The battery case shall not crack, bulge, leak, vent, emit flame, burn or explode. Such failures shall be considered a catastrophic failure and the complete batch rejected until corrective action is taken.

3.2.4 Transportable. The non-rechargeable battery shall not be damaged when transported by all commercial and armed forces means including transportation as loose cargo without requiring any additional wrapping or storage. The battery shall comply with the requirements of C-02-008-001/TS-000 General Safety Lithium Batteries Handing, Storage, Preservation and Disposal Instructions Basic and shall also meet International Air Transportation Association (IATA) regulation and A-LM-117-001/FP-001 Transportation of Dangerous Materials by Canadian Forces Aircraft.

3.3 DESIGN AND CONSTRUCTION

3.3.1 Nameplates and Product Marking. The nameplates and product marking shall be in accordance with MIL-HDBK-454A, Guideline 67 and D-02-002-001/SG-001.

3.3.2 Human Engineering. The non-rechargeable battery shall be easily installed, by a user, under battlefield conditions wearing environmental clothing or nuclear, biological and chemical (NBC) protective clothing/equipment. Subject to approval of the Technical Authority, off the shelf components may be modified to conform to MIL-STD-1472F. However, the following sections of MIL-STD-1472F shall apply:

a. Paragraph 4.4 Human Engineering Design;
b. Paragraph 4.9 Ruggedness;
c. Paragraph 4.10, Design for NBC Contamination Survivability; and
d. Paragraph 5.5, Labelling.

3.4 Documentation. Documentation shall be in DND bilingual format as described in CFTO C-01-100-100/AG-006. Equipment documentation shall include as a minimum:

a. Configuration identification data;
b. Instructions for handling, storage, packing, shipping; and

c. Safety instructions.

3.5 Precedence. In the event of conflict between documents referenced herein, the following order of precedence applies, in order of decreasing precedence as listed below:

a. This Specification;
b. NATO standards;
c. ABCA standards;
d. Canadian Military specifications;
e. U.S. Federal specification;
f. U.S. Military specifications; and
g. Industrial specifications.

4.0 QUALITY ASSURANCE PROVISIONS/TESTING

4.1 First Article Inspection Requirements. The non-rechargeable battery furnished under this specification shall have passed first article inspection to the requirements of section 3 above. A First Article Test Plan, First Article Test Descriptions and Procedures and a First Article Test Report shall follow the procedures of Section 4.4 of MIL-PRF-49471B tailored to requirements of section 3 of this specification. It shall include the examinations and tests found in both Table I and Table II of MIL-PRF-49471B. A copy of the First Article Test Report shall be provided to the DND Technical Authority seven (7) days prior to the shipment date. The Crown reserves the right to refused the contracted shipment based on failure(s) found in the First Article Test Report.

4.2 Inspection System. The contractor shall maintain an inspection system that conforms to ISO 9002.

4.3 Calibration System. Instrumentation and equipment utilized in the manufacture and testing of the non-rechargeable battery shall be maintained and calibrated in accordance with ISO 10012-1.

QUALIFICATION PRODUCT LIST EVALUATION

1. DLCSPM has decided to establish a Qualification Product List (QPL) for its procurement of BA-521/LS batteries for the LAR radio. To establish this list, DLCSPM will be pre-qualifying each proposal by submitting the contractor batteries to a series of pre-determined tests. Only proposals having successfully completed each test shall be allowed on the list. During the tests if any battery submitted fails to meet an evaluation criteria, the submission from this contractor shall be declared non-compliant and the contractor shall be disqualified from the QPL. The list shall be valid for a period of three years with additional optional years at the Crown discretion.

2. To participate in the process each contractor shall submit 15 completely assembled BA-521/LS batteries. The batteries submitted for the evaluation shall be the exact end product being submitted for this RFP and for the future RFP if the contractor is admitted to the QPL. The contractor will be responsible for the $3000.00 pre-qualifying test costs. The batteries and the $3000.00 cheque shall be submitted to PWGSC at contract closure date. The cheque shall be made out to DRDC the recipient described in the RFP documents. The DRDC Battery Laboratory shall perform the battery tests and evaluations. DRDC, through PWGSC, will be providing each contractor with the evaluation and test results at test completion of its product under the form of a letter- report. It is estimated that six weeks will be required to perform all pre-qualified tests. All submitted QPL batteries and funds shall be non refundable.

3. The scope of the pre-qualification test shall evaluate some of the most stringent tests included in the BA-521/LS SOW. The areas that will be evaluated during the pre-qualification tests are the battery capacity conformances at different temperatures, battery ruggedness and construction specifications and the battery High Temperature Storage (HTS) tests.

4. Preliminary Statistical Data and Inspection (Row1, Figure C.1): every battery shall be visually inspected (such as battery dimensions, connector, finish, etc), mass measurement, open circuit voltage, torque measurements as per paragraph 6 and external workmanship. Battery bayonet mechanism and connector shall be checked as for the SOW requirement, ensuring that the blocking mechanism prohibits insertion into the IRIS charger, etc. The battery external dimensions shall be as specified in the SOW.

5. For all categories, (Row 1, Figure C.1), two out of the three batteries of each group shall begin with a drop test from a height of 1 meter, impacted on a smooth concrete floor, with the batteries pre-conditioned to the test temperature requirement. Afterwards, the batteries shall meet the test requirements of the intended test and the requirements of the drop test as stipulated in the MIL-PRC-49471B Paragraph 3.10.

6. Torques measurements (Row 1, Figure C.1): each battery shall be tested for the ability to mate to the LAR radio battery contacts. Each battery shall engage fully to the radio when torque up to a maximum of 34 Inch-Pounds is applied and shall not engage to the radio battery contacts when a torque force less than 15 Inch Pounds is applied. The battery shall de-engage completely from the radio bayonet battery contacts when a torque of less than 30 Inch Pounds is applied in the other direction with the battery release catch is depressed.

7. The HTS test (Row 2-3, Figure C.1) shall ensure that the batteries meet the discharge requirement after accelerated aging. The batteries capacity shall exceed 9 hours at –30C.

8. The voltage delay of each battery (Row 4, Figure C.1) shall be measured at the beginning of discharging, using a load of 944 mA. For a cut-off voltage of 8.0V, the voltage delay must be less than 30 seconds. This voltage delay time shall be noted. The batteries shall then be discharged according to the periodic load as described in paragraph 9.

9. The capacity requirements (Row 4, Figure C.1) are based on the periodic transmit, receive and stand-by currents and times of 944 mA for 20 sec, 60 mA for 20 sec and 27 mA for 160 sec for each of the following temperature capacity requirements:

Minimum Life (Hrs)	TX/RX/Stand By	Temperature
24	1:1:8	+55C
24	1:1:8	+20C
12	1:1:8	-20C
09	1:1:8	-30C

The batteries shall meet the time requirement as stipulated.

10. The battery voltages, measured after the CDD has been activated for five days, shall be less than 4 Volts (Row 5, Figure C.1). Note that this is not the MIL-PRC-49471B test, which involves a fully charged battery.

11. The batteries shall be evaluated for their construction as detailed in the SOW, (Row 6, Figure C.1). The battery casings will be opened to ensure that all the internal components as stipulated in the SOW are present, that the construction and the workmanship shall ensure that no short-circuit shall occur or have a potential of occurring, that no bare wires or interconnection are left unprotected and are covered by a heat shrink tubing and that sufficient potting compound are supporting all the internal components to prevent any component movement. Each cell protective vent mechanism shall be free of potting material.

12. Note that after each QPL Evaluation step, any battery failing to meet the performance requirements detailed in Annex B paragraph 3.2.3.3 a or c, shall disqualify the contractor submission from the QPL.

13. The QPL Evaluation tests shall not exempt the contractor from testing its product for the complete first article test requirements as stated in the SOW. The successful contractor shall submit with its final deliverables all of the test results of the first article tests as specified in the SOW.

A total of 15 Batteries are required.

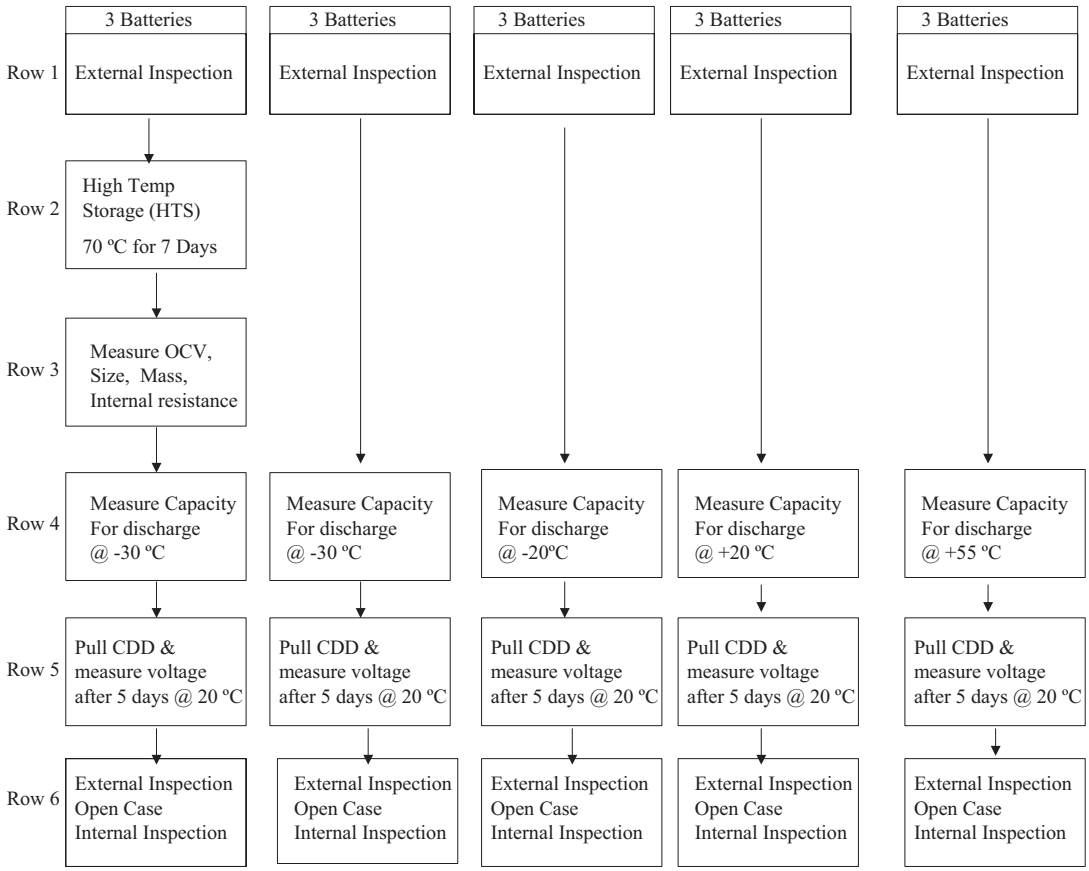

Figure C.1

Note A: Row 1, two out of three batteries will be submitted to a 1 m Drop Test.

Note B: Row 2 and 3, OCV, internal resistance and mass measurements taken before and after HTS.

Note C: Row 6, a minimum of two batteries shall be internally inspected, additional batteries could be inspected at Crown discretion.

Dimensions For The $LiSO_2$ Battery

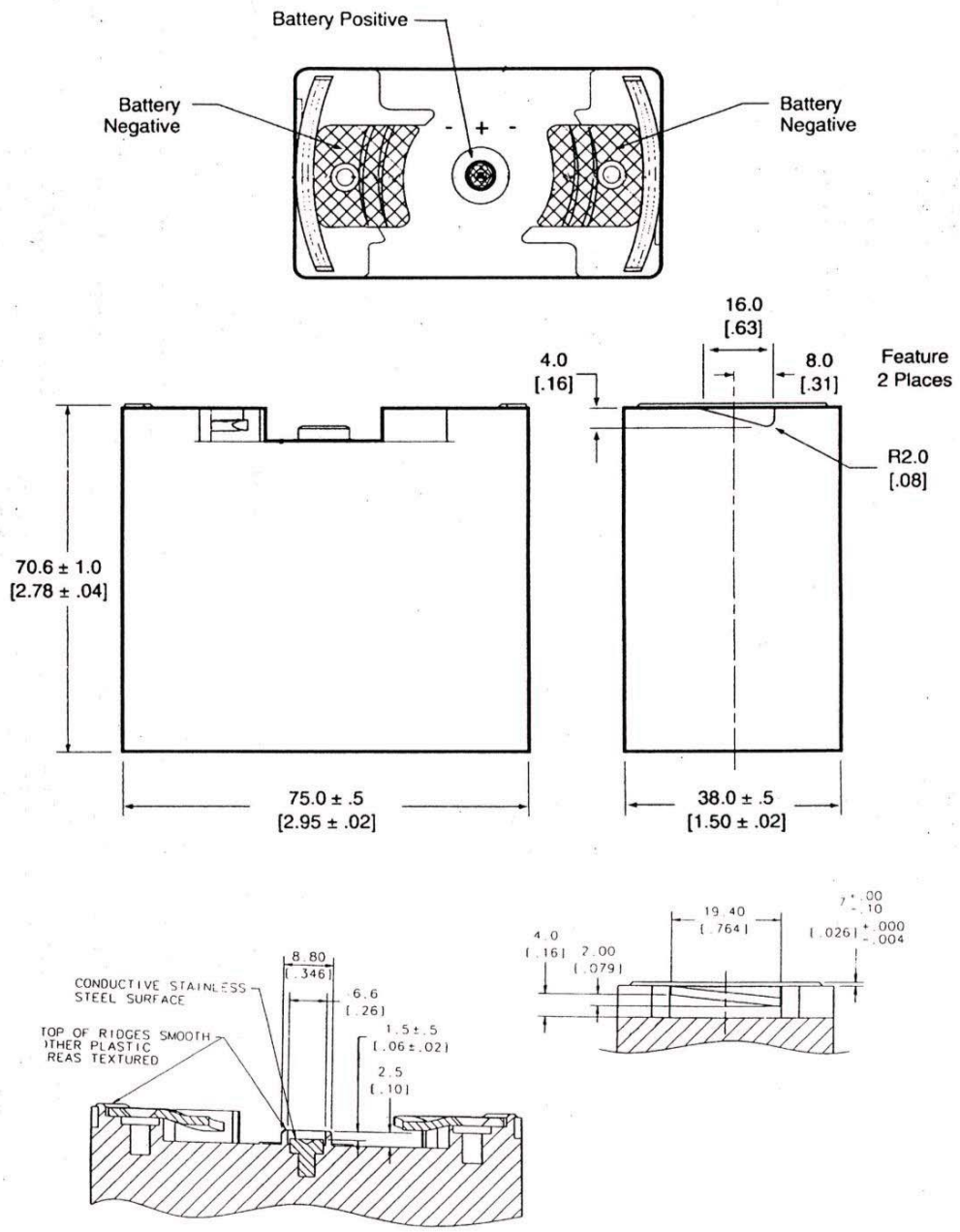

FIGURE 1

Note 1: The top portion of Figure 1 depicts the top of the Ni-Cad battery. A blocking mechanism shall be designed in the battery interface to prevent contact between the battery connections and the IRIS battery charger system.

Note 2: Upon request, technical drawings of the RT-5113/PRC-521 Transceiver battery connector and the MT-5321/G Battery Charger Tray will be provided by the Crown. In addition, the technical authority will provide access to a non-functional radio to ensure that the battery can connect properly, access to a harness to ensure that the radios and batteries will fit and access to a battery charger to ensure that the battery will not connect to it. This access will be provided during normal business hours at the technical authorities location: Louis St-Laurent Building, 555 Blvd de la Carriere, Hull, Quebec. Contractors wanting this access to equipment shall contact Chief Warrant Officer Lacoste at (819) 994-6797 or Warrant Officer Turcotte at (819) 994-4035 and arrange an appointment.

Battery Charger Tray Front View For Ni-Cad Battery

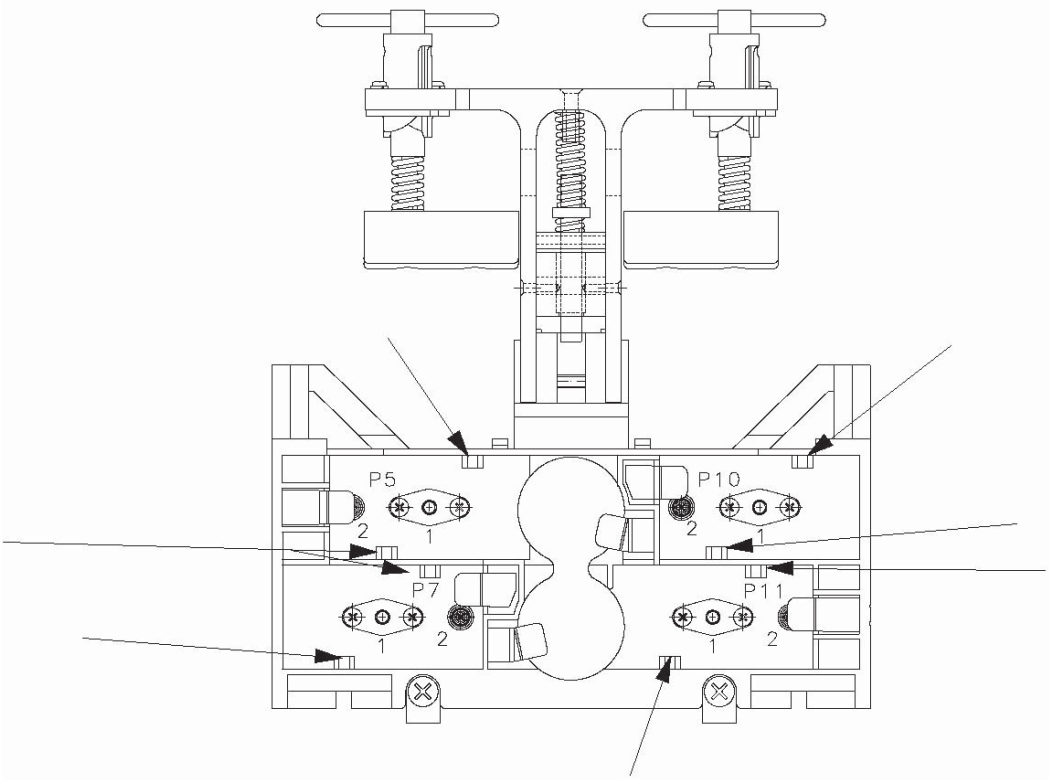

NOTE: Arrows indicate tabs that are critical to preventing the accidental insertion of non rechargeable batteries.

FIGURE 2

Note 3: Figure 2 is a front view of the battery tray to indicate the location of the blocking tabs to preclude complete insertion of non-rechargeable batteries. The figure is not to scale.