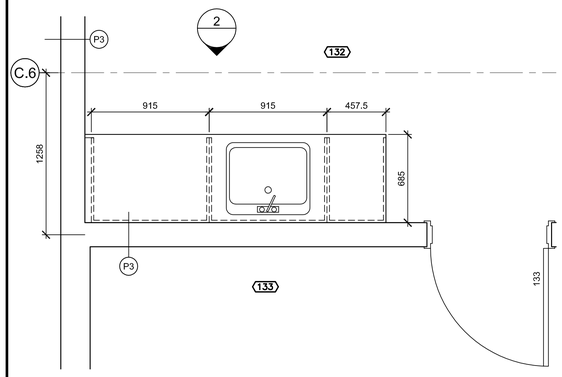

ENLARGED PLAN 1 / 601-1

SCALE : 1:20

0mm 500mm 1000mm 1500mm 2000mm 2500mm

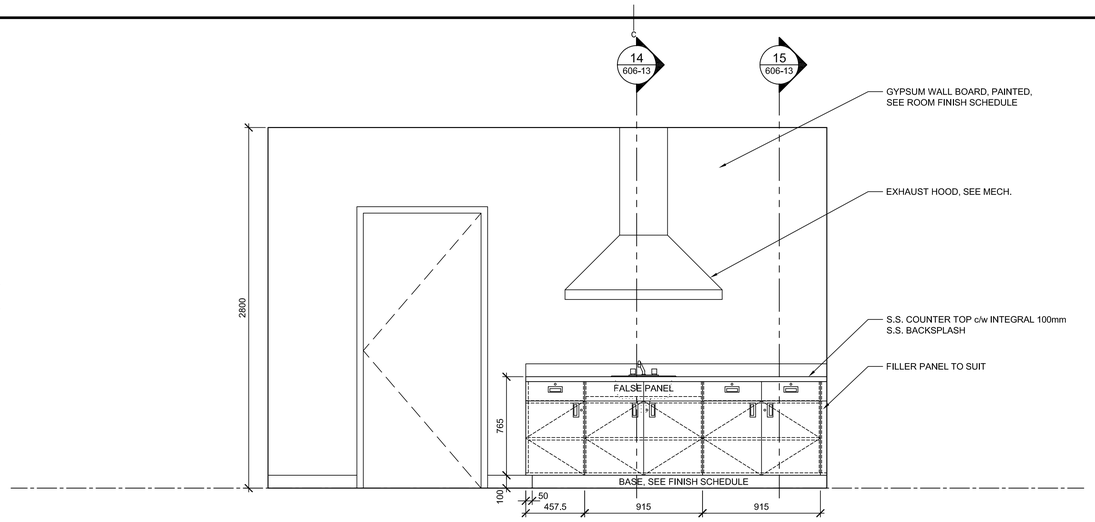

ELEVATION RM 132 2 / 601-1

SCALE : 1:20

0mm 500mm 1000mm 1500mm 2000mm 2500mm

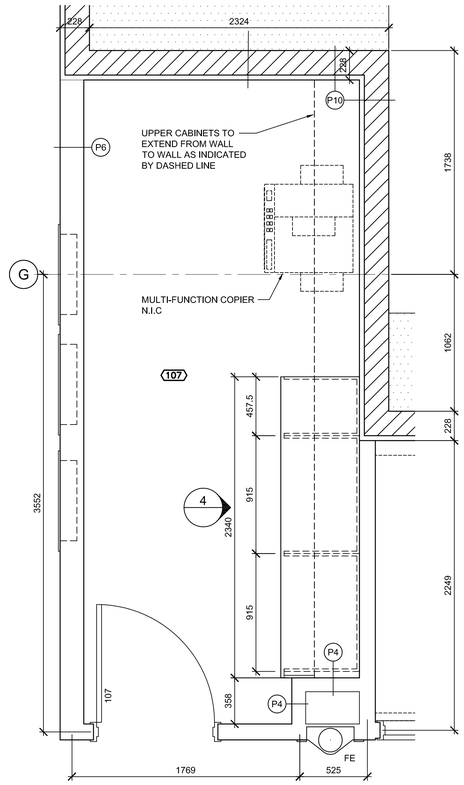

ENLARGED PLAN 1 / 601-1

SCALE : 1:20

0mm 500mm 1000mm 1500mm 2000mm 2500mm

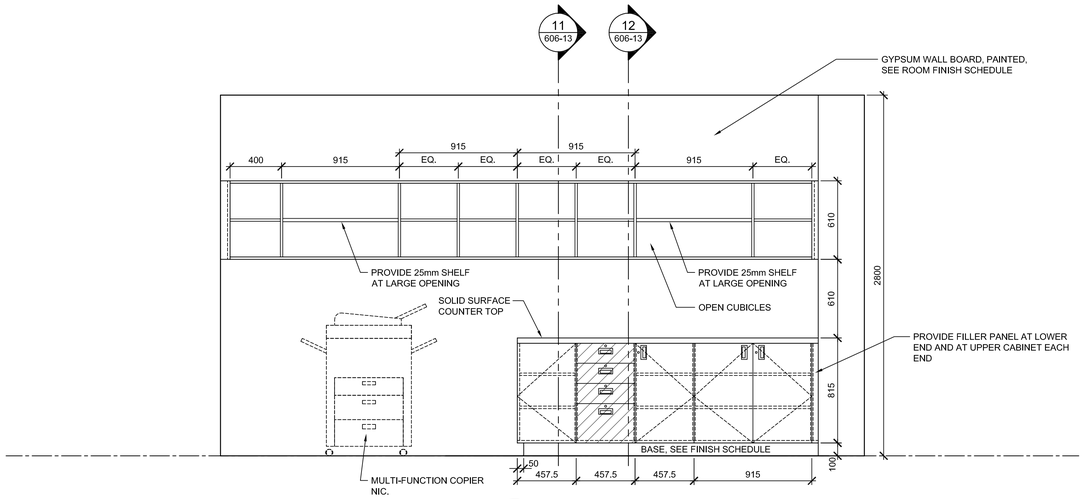

ELEVATION RM 107 4

SCALE : 1:20

0mm 500mm 1000mm 1500mm 2000mm 2500mm

NOTE:
FACE OF DRAWER UNIT INDICATED WITH HATCH PATTERN TO RECEIVE ACCENT COLOUR P.LAM FINISH

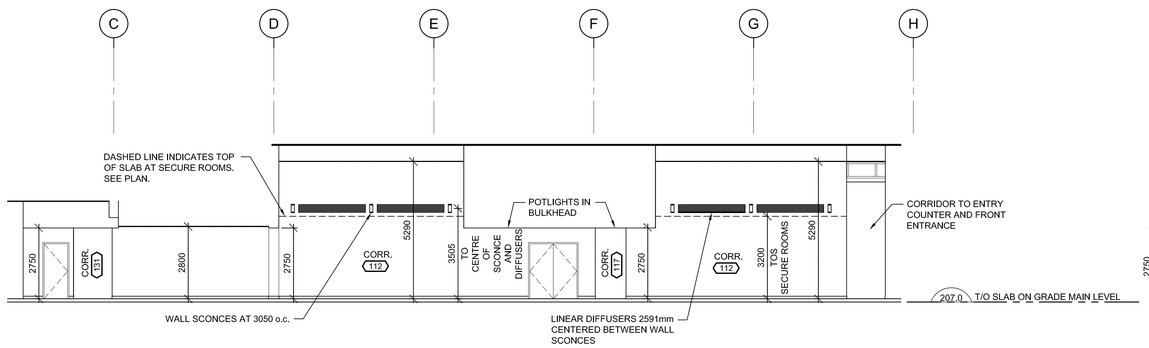

CORRIDOR 112 - INTERIOR ELEVATION 5 / 601-1

SCALE : 1:100

0m 1m 2m 3m 4m 5m 6m 7m 8m 9m 10m

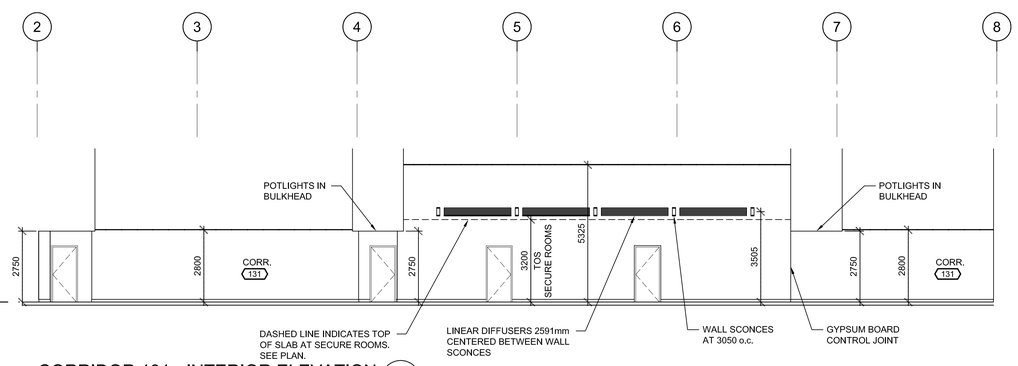

CORRIDOR 131 - INTERIOR ELEVATION 6 / 601-1

SCALE : 1:100

0m 1m 2m 3m 4m 5m 6m 7m 8m 9m 10m

Public Works and Government Services Canada / Travaux Publics et Services gouvernementaux Canada

exp Architects Inc.
t: +1.506.452.9000 | f: +1.506.459.3954
1133 Regent Street, Suite 300
Fredericton, NB E3B 3Z2
CANADA
www.exp.com

exp. Project No. FRE-00214763-A5

BUILDINGS · EARTH & ENVIRONMENT · ENERGY · INDUSTRIAL · INFRASTRUCTURE · SUSTAINABILITY

22127 CERTIFICATE of PRACTICE 2016.02.17 Colin Turner exp ARCHITECTS INC. ARCHITECTS' ASSOCIATION of NEW BRUNSWICK

revisions		date
0	RELEASED FOR CONSTRUCTION	01/29/2016

project / projet

NEW G.O.C.B SAINT–LÉONARD NEW BRUNSWICK

drawing / dessin

CASEWORK AND INTERIOR ELEVATIONS RMS 107, 132 AND CORRIDORS 112 AND 131

designed / conçu: SJO/GAR/CET
date: JANUARY 29, 2016
drawn / dessiné: GB
date: JANUARY 29, 2016
approved / approuvé: DAG
date: FEBRUARY 17, 2016
Tender / Soumission
PWGSC Project Manager / Administrateur de projets TPSGC
project number / no. du projet: R.069499.001
drawing no. / no. du dessin: 606–11