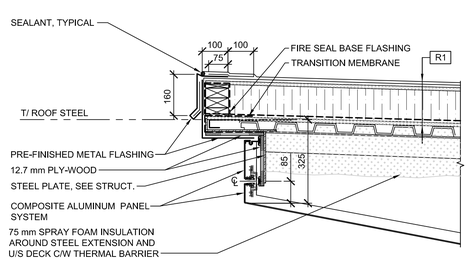

SECTION DETAIL - AT ROOF EDGE (1 / 604-2)

SCALE : 1:10

0mm 100 200 300 400 500 600 700 800 900 1000mm

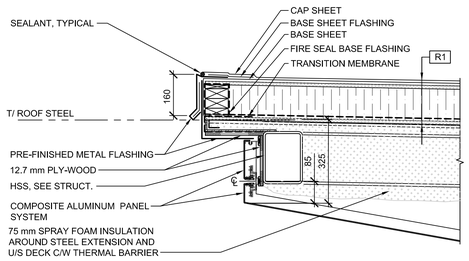

SECTION DETAIL - AT ROOF EDGE (2 / 604-2)

SCALE : 1:10

0mm 100 200 300 400 500 600 700 800 900 1000mm

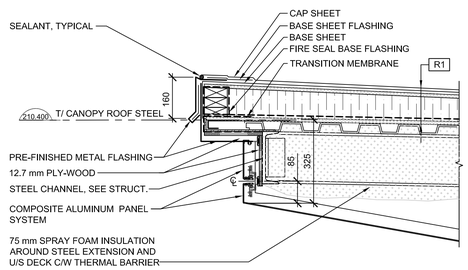

SECTION DETAIL - AT CANOPY ROOF EDGE (3 / 604-2)

SCALE : 1:10

0mm 100 200 300 400 500 600 700 800 900 1000mm

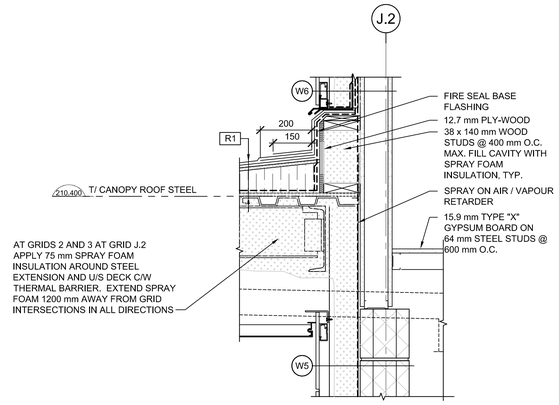

SECTION DETAIL - AT CANOPY / WALL (4 / 604-2)

SCALE : 1:10

0mm 100 200 300 400 500 600 700 800 900 1000mm

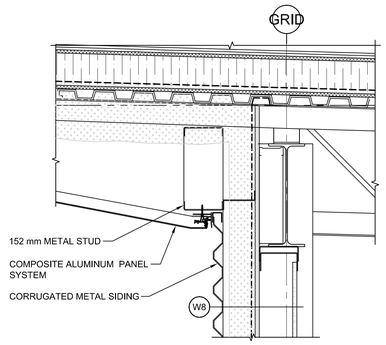

SECTION DETAIL - ROOF DETAIL (5 / 604-2)

SCALE : 1:10

0mm 100 200 300 400 500 600 700 800 900 1000mm

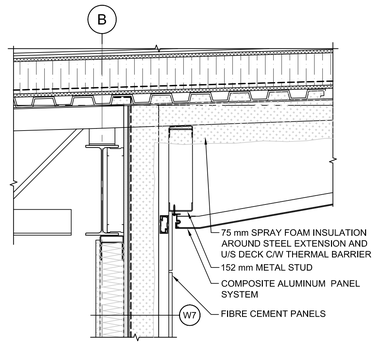

SECTION DETAIL - ROOF DETAIL (6 / 604-2)

SCALE : 1:10

0mm 100 200 300 400 500 600 700 800 900 1000mm

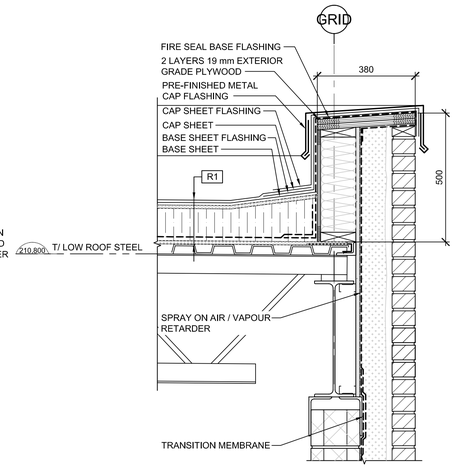

SECTION DETAIL - ROOF AT PARAPET (7 / 604-2)

SCALE : 1:10

0mm 100 200 300 400 500 600 700 800 900 1000mm

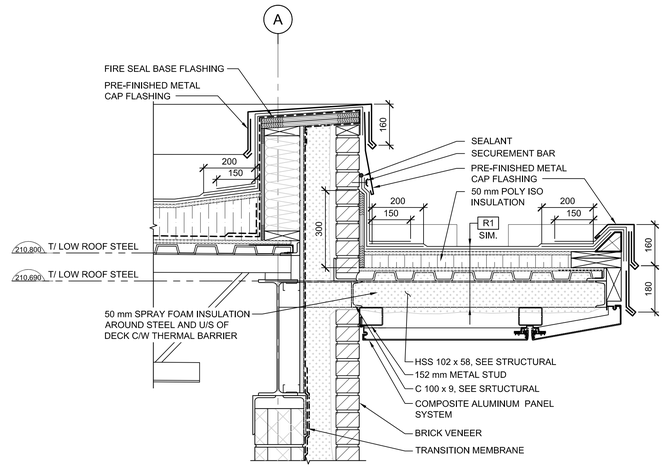

SECTION DETAIL - AT ENTRANCE CANOPY (8 / 604-3)

SCALE : 1:10

0mm 100 200 300 400 500 600 700 800 900 1000mm

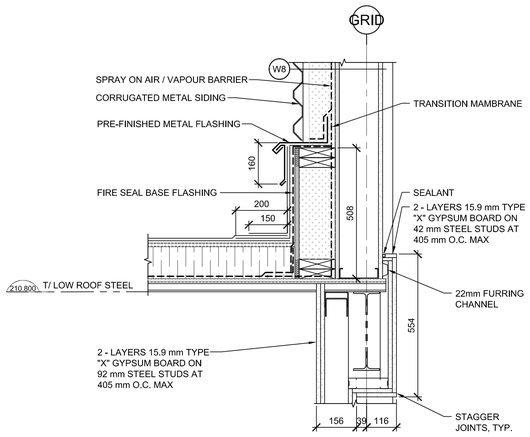

SECTION DETAIL (9 / 604-2)

SCALE : 1:10

0mm 100 200 300 400 500 600 700 800 900 1000mm

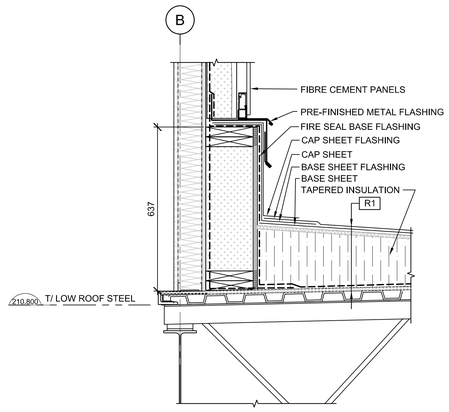

SECTION DETAIL (10 / 604-2)

SCALE : 1:10

0mm 100 200 300 400 500 600 700 800 900 1000mm

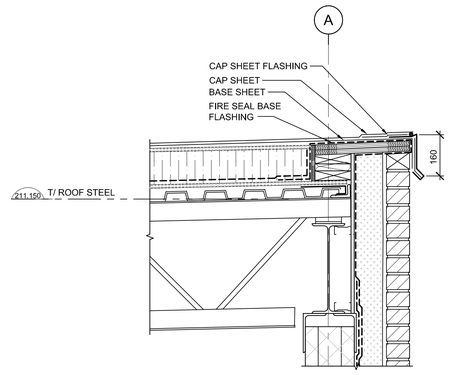

SECTION DETAIL - AT HIGH ROOF (11 / 604-3)

SCALE : 1:10

0mm 100 200 300 400 500 600 700 800 900 1000mm

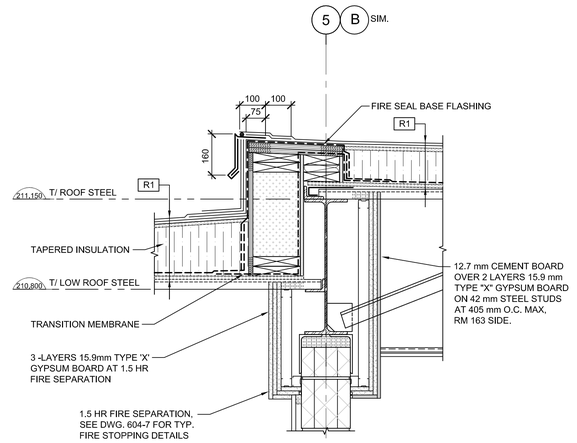

SECTION DETAIL - AT HIGH / LOW ROOF (12 / 604-3)

SCALE : 1:10

0mm 100 200 300 400 500 600 700 800 900 1000mm

Public Works and Government Services Canada / Travaux Publics et Services gouvernementaux Canada

exp Architects Inc.
t: +1.506.452.9000 | f: +1.506.459.3954
1133 Regent Street, Suite 300
Fredericton, NB E3B 3Z2
CANADA
www.exp.com

exp. Project No. FRE-00214763-A5

BUILDINGS · EARTH & ENVIRONMENT · ENERGY · INDUSTRIAL · INFRASTRUCTURE · SUSTAINABILITY

22127 CERTIFICATE of PRACTICE 2016.02.17 Colin Turner exp ARCHITECTS INC. ARCHITECTS ASSOCIATION of NEW BRUNSWICK

revisions		date
0	RELEASED FOR CONSTRUCTION	01/29/2016

project / projet

NEW G.O.C.B SAINT–LÉONARD NEW BRUNSWICK

drawing / dessin

SECTION DETAILS

designed / conçu: CET
date: JANUARY 29, 2016
drawn / dessiné: BCF
date: JANUARY 29, 2016
approved / approuvé: DAG
date: FEBRUARY 17, 2016
Tender / Soumission
PWGSC Project Manager / Administrateur de projets TPSGC
project number / no. du projet: R.069499.001
drawing no. / no. du dessin: 604–5

PWGSC B1 (2004)

E–DRM/GDD–E: 527793