04 11

0 10 20 30 40 50 60 70 80 90 100 110 120 130 140 150 160 170 180 190 200 millimetres

LEGEND

PVC	PVC (POLYVINYL CHLORIDE) PIPING
DI	RO/DI WATER TUBING (HIGH DENSITY POLYETHYLENE)
SS	STAINLESS STEEL TUBING (HYDROGEN PIPING)
	MOTORIZED DAMPER WITH END SWITCH
	PUMP
	SHUT-OFF VALVE
	CHECK VALVE
	BALL VALVE
	PRESSURE GAUGE
	DIRECTION OF FLOW
	THERMAL INSULATION
X	EQUIPMENT TAG (REFER TO SCHEDULE)
X	DRAWING NOTE TAG
	AIR DUCT RISE/DROP
	AIR RISE/DROP / GRILLE
T	DDC TEMPERATURE SENSOR
F	FIRE/FLAME SENSOR
HS	HYDROGEN GAS SENSOR
HT	HYDROGEN GAS TRANSMITTER
BDD	BACK DRAFT DAMPER
	MANUAL BALANCING DAMPER
M	MOTORIZED DAMPER
	FLEXIBLE DUCT CONNECTION
TYPE SIZE CFM	GRILLE TAG
TYPE SIZE OUTPUT	RADIATION UNIT TAG
EQ NO	EQUIPMENT TAG
H E	ELECTRIC HEATING ELEMENT
	FAN INSIDE A CABINET
DP	DIFFERENTIAL PRESSURE GAUGE

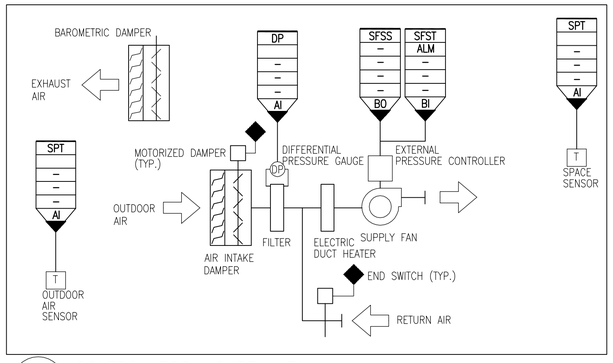

1 M000 CONTROL ROOM SUPPLY FAN
N.T.S.

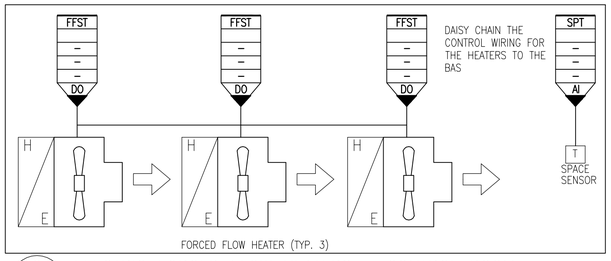

2 M000 ELECTRIC FORCED FLOW HEATERS – CONTROL ROOM
N.T.S.

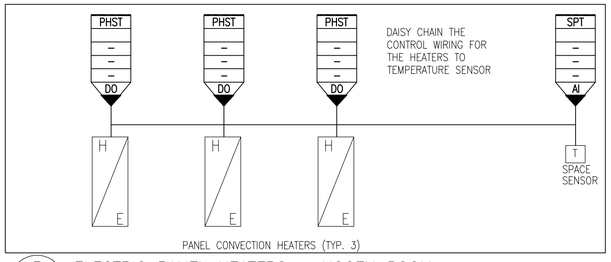

3 M000 ELECTRIC PANEL HEATERS – HOGEN ROOM
N.T.S.

GENERAL NOTES:

1. THE CONTRACTOR SHALL VERIFY EXACT LOCATIONS, SIZES, INVERTS, ETC. PRIOR TO COMMENCEMENT OF WORK. VERIFY ALL CONNECTION POINTS ON SITE.
2. REFER TO ARCHITECTURAL AND ELECTRICAL DRAWINGS FOR COORDINATION PURPOSES.
3. ALL CUTTING & PATCHING OF FLOOR SLABS, WALLS ETC. TO BE PERFORMED BY GENERAL CONTRACTOR.
4. ALL WORK SHALL COMPLY IN EVERY RESPECT WITH ALL NATIONAL, PROVINCIAL AND LOCAL CODES AND BY-LAWS, WHICH SHALL BE CONSIDERED PART OF THE SPECIFICATION. IN THE CASE OF CONFLICTING REQUIREMENTS, BE GOVERNED BY THE MOST STRINGENT REGULATIONS.
5. THE CONTRACTOR SHALL INSTALL WATER SYSTEMS IN COMPLETE ACCORDANCE WITH THE RECOMMENDATIONS OF THE NATIONAL/PROVINCIAL BUILDING CODE, AND ALL AUTHORITIES HAVING JURISDICTION IN THE PROVINCE OF ONTARIO.
6. THE CONTRACTOR SHALL PROVIDE FABRICATION DRAWINGS AND PROVIDE SHOP DRAWINGS FOR ALL EQUIPMENT AND DUCTWORK LAYOUT PRIOR TO ORDERING EQUIPMENT AND FABRICATION OF WORK.
7. THE CONTRACTOR SHALL INSTALL HYDROGEN SYSTEMS IN COMPLETE ACCORDANCE WITH NFPA 2, 50 AND BNQ 1784, THE NATIONAL/PROVINCIAL BUILDING CODE, AND ALL AUTHORITIES HAVING JURISDICTION IN THE PROVINCE OF ONTARIO.
8. COORDINATE THE EXACT LOCATIONS OF EQUIPMENT, DUCT OPENINGS, AND DUCT LOCATIONS WITH THE STRUCTURE. COORDINATE THE EXACT LOCATIONS OF EQUIPMENT WITH ARCHITECTURAL FLOOR PLANS AND DEPARTMENTAL REPRESENTATIVE.
9. COORDINATE THE EXACT LOCATION OF THE MECHANICAL EQUIPMENT ON SITE WITH THE CONTRACTOR, GENERAL CONTRACTOR, ARCHITECTURAL CEILING PLAN, LIGHTING LAYOUT, ETC. TO ENSURE THAT THERE ARE NOT ANY CONFLICTS DURING INSTALLATION.
10. ALL HYDROGEN PIPING TO BE 316 STAINLESS STEEL TUBING AS PER SPECIFICATIONS. (REFER TO SCHEMATIC FOR SIZING). NOTE TUBING SIZES GIVEN IN INCHES.
11. ALL RO/DI WATER TUBING/FITTINGS/VALVES SUPPLIED WITH THE RO SYSTEM, CONTRACTOR IS NOT TO SUBSTITUTE ANY NON-MANUFACTURER SUPPLIED PIPE/VALVED FITTINGS.
12. INFLATION VALVE AND SPARE TO BE MOUNTED IN ACCESSIBLE LOCATION (1200mm) A.F.F. NEAR INFLATION ROOM VIEWING WINDOW.
13. GOVERNMENT FURNISHED EQUIPMENT (GFE) TO BE PROVIDED BY CLIENT AND TO BE INSTALLED IN ACCORDANCE WITH MANUFACTURER'S INSTRUCTIONS.
14. ALL SUPPLY WATER AND RO REJECT WATER PIPING TO BE SCHEDULE 40 PVC. ALL ASSOCIATED VALVES AND FITTINGS TO BE PVC AS PER SPECIFICATIONS.
15. ALL CONTRACTOR SUPPLIED H... TUBING AND FITTINGS TO BE SWAGELOK AS PER SPECIFICATIONS.
16. HYDROGEN GENERATOR TO BE INSTALLED IN ACCORDANCE WITH MANUFACTURER'S INSTRUCTIONS.
17. PROVIDE ANY SUBMITTAL SUBSTITUTIONS WITH EQUAL PERFORMANCE AS EQUIPMENT SPECIFIED.
18. THE CONTRACTORS ARE RESPONSIBLE FOR THE MUTUAL COORDINATION OF ALL ELECTRICAL REQUIREMENTS OF MECHANICAL EQUIPMENT. COORDINATION IS TO INCLUDE THE COMMUNICATION OF ALL FINAL ELECTRICAL NAMEPLATE INFORMATION BETWEEN THE CONTRACTORS, THE COMMUNICATION OF THE DETAILED CONTROL INFORMATION AS WELL AS ANY ANCILLARY INFORMATION REQUIRED FOR THE FINAL SYSTEMS TO OPERATE AS INTENDED BY THE RESPONSIBLE PROFESSIONAL ENGINEER. THE COORDINATION IS TO OCCUR PRIOR TO THE ORDERING OF EQUIPMENT BY EITHER TRADE. NO EXTRA COMPENSATION WILL BE ALLOWED DUE TO FAILURE TO CARRY OUT THIS COORDINATION. REPORT AT ONCE TO THE CONSULTANT ANY DEFECT, DISCREPANCY, OMISSION OR INTERFERENCE AFFECTING THE SATISFACTORY COMPLETION OF WORK.

GENERAL NOTES: HVAC

1. THE CONTRACTOR SHALL CAREFULLY REMOVE & RELOCATE EXISTING EQUIPMENT AS PER OWNERS REQUIREMENTS.
2. ALL DUCTWORK TO BE OF 100% ALUMINUM CONSTRUCTION AS PER SPECIFICATIONS.
3. ALL MOTORIZED DAMPERS TO BE OF 100% ALUMINUM CONSTRUCTION C/W SPARK PROOF ACTUATOR AS PER SPECIFICATIONS.
4. ALL DUCT DIMENSIONS DENOTE INTERNAL "OPEN" AREA OF THE DUCT.
5. ALL DUCTWORK PENETRATING THE BUILDING THERMAL ENVELOPE SHALL BE INSULATED A MINIMUM 10'-0" BACK FROM THE BUILDING PENETRATION.
6. THE CONTRACTOR SHALL INSTALL HEATING AND VENTILATION SYSTEMS IN COMPLETE ACCORDANCE WITH THE RECOMMENDATIONS OF THE NATIONAL/PROVINCIAL BUILDING CODE, ASHRAE, SMACNA LATEST EDITION DUCT STANDARDS, APPLICABLE NFPA STANDARDS, AND ALL AUTHORITIES HAVING JURISDICTION IN THE PROVINCE OF ONTARIO.
7. ALL INSULATING MATERIALS, METHODS, SIZES AND TYPES OF INSULATION FOR ALL DUCT WORK SHALL BE INSTALLED TO THE REQUIREMENTS OF THE ASHRAE STANDARDS 90.1-2010 "ENERGY STANDARD FOR BUILDING EXCEPT LOW-RISE RESIDENTIAL BUILDINGS", AND THERMAL INSULATION ASSOCIATION OF CANADA (TIAC) STANDARDS.

DRAWING LIST

DRAWING NUMBER	DRAWING TITLE
M000	MECHANICAL LEGEND, DRAWING LIST,GENERAL NOTES AND CONTROL DIAGRAMS
M100	FLOOR PLAN HYDROGEN/WATER SYSTEM
M200	HYDROGEN/WATER SYSTEM SCHEMATIC AND EQUIPMENT SCHEDULE
M201	HYDROGEN/WATER SYSTEM GOVERNMENT FURNISHED EQUIPMENT DETAILS
M300	FLOOR PLAN VENTILATION SYSTEM
M301	VENTILATION SYSTEM DETAILS AND EQUIPMENT SCHEDULE
M400	CONTROL SYSTEM SCHEMATIC AND INPUT/OUTPUT SCHEDULE

Public Works and Government Services Canada
Travaux publics et Services gouvernementaux Canada

HHAngus
HHAngus & Associates Limited Consulting Engineers
1127 Leslie Street, Toronto, ON, M3C 2J6 · Canada
www.hhangus.com | T 416 443 8200 | F 416 443 8290

LICENSED PROFESSIONAL ENGINEER
D.B. DOVAS
100178914
PROVINCE OF ONTARIO

FOR BID PURPOSES AND NOT FOR CONSTRUCTION

revision		date
05	ISSUED FOR TENDER	29/01/2016
04	ISSUED FOR 99% PROGRESS SET	04/12/2015
03	ISSUED FOR 66% PROGRESS SET	30/10/2015
02	ISSUED FOR 33% PROGRESS SET	09/10/2015
01	ISSUED FOR CLASS C ESTIMATE	13/05/2015

Do not scale drawings.
Verify all dimensions and conditions on site and immediately notify the Departmental Representative of all discrepancies.

A Detail No. / No. du détail
B drawing no. – where detail required / dessin no. – où détail exigé
C drawing no. – where detailed / dessin no. – où détaillé

project title / titre du projet
EGBERT Ontario
6248 8TH LINE, L0L 1N0
NEW HYDROGEN GENERATION (HOGEN) AND BALLOON LAUNCHING BUILDING

drawing title / titre du dessin
MECHANICAL LEGEND, DRAWING LIST, GENERAL NOTES AND CONTROL DIAGRAMS

drawn by / dessine par: HB
designed by / conc par: DD
approved by / approuve par: DD
bid / offre
project manager / administrateur de projets
project date / date du projet: JAN 29, 2016
project no. / no. du projet: R.071909.001
drawing no. / dessine no.: M000

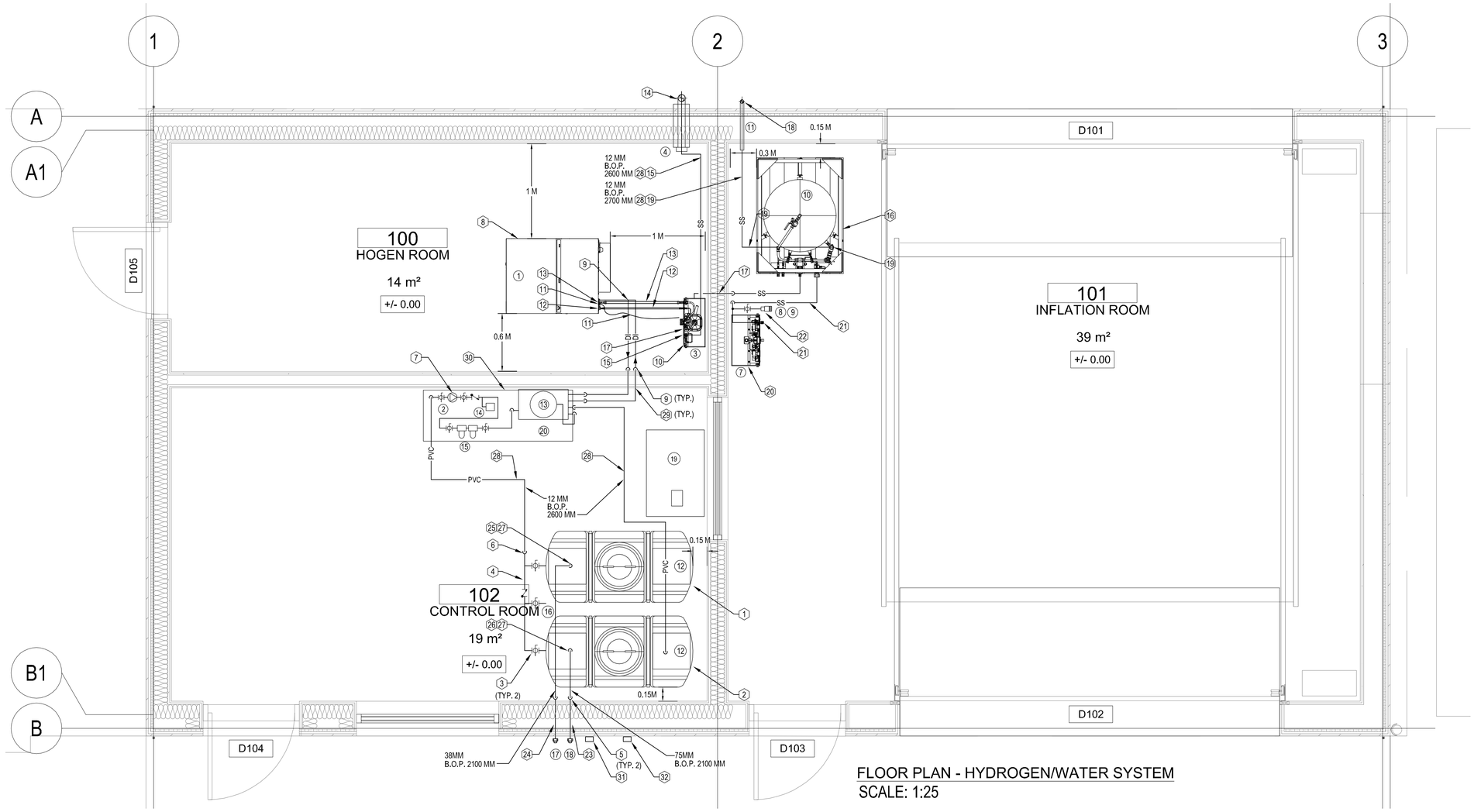

FLOOR PLAN - HYDROGEN/WATER SYSTEM
SCALE: 1:25

DRAWING NOTES

1. FRESH WATER STORAGE TANK TO BE LOCATED AS SHOWN. ENSURE ADEQUATE CLEARANCE FOR PIPING/VALVING BETWEEN FRESH AND WASTE WATER TANKS. WATER SUPPLY PIPE TO CONNECT TO BOTTOM TANK OUTLET. REFER TO SCHEMATIC AND EQUIPMENT SCHEDULE FOR ADDITIONAL REQUIREMENTS.
2. WASTE WATER STORAGE TANK TO BE LOCATED AS SHOWN. ENSURE ADEQUATE CLEARANCE FOR PIPING/VALVING BETWEEN FRESH AND WASTE WATER TANKS. WATER SUPPLY PIPE TO CONNECT TO BOTTOM TANK OUTLET. REFER TO SCHEMATIC AND EQUIPMENT SCHEDULE FOR ADDITIONAL REQUIREMENTS.
3. TANK ISOLATION VALVE TO BE ACCESSIBLE AT FLOOR LEVEL AS SHOWN.
4. FRESH AND WASTEWATER STORAGE TANK PIPING TO BE LOW LEVEL AND SUPPORTED FROM FLOOR.
5. SECURE THE PIPE TO THE WALL. ON INSIDE OF ROOM, TRANSITION FROM SS TO PVC.
6. WATER SUPPLY PIPE TO RISE UP BETWEEN TANKS AS SHOWN. PIPE TO BE FIRMLY SECURED TO CEILING WITH APPROPRIATE CLAMPS. COORDINATE EXACT PLACEMENT ON SITE.
7. PUMP SUPPLIED BY CONTRACTOR.
8. HYDROGEN GENERATOR (HOGEN UNIT) TO BE LOCATED AS SHOWN. REFER TO SCHEMATIC, DETAILS, AND EQUIPMENT SCHEDULE FOR ADDITIONAL REQUIREMENTS. PROVIDE 100MM HIGH CONCRETE HOUSEKEEPING PAD SIZED TO DIMENSIONS OF HOGEN, 97MMX79MM, CONFIRM PRIOR TO FABRICATION.
9. R.O. SUPPLY AND RETURN TUBING TO EXTEND SECURED TO CONTROL ROOM WALL AT APPROXIMATELY 1250 MM A.F.F. THROUGH WALL TO HOGEN ROOM AND DROP TO 170 MM A.F.F. AND EXTEND TO REAR OF HOGEN UNIT AS SHOWN. TUBING TO BE SECURED TO HOGEN ROOM WALL. PROVIDE CONNECTION TO HOGEN UNIT, AND APPROPRIATE TUBING SUPPORT FROM FLOOR. REFER TO SCHEMATIC AND DETAILS. PROVIDE PLASTIC ESCUTCHEON AT WALL PENETRATION. USE HDP PIPING.
10. VENT VALVE ASSEMBLY TO BE SECURED TO WALL WHERE SHOWN AT 29 MM A.F.F . REFER TO SCHEMATIC, DETAILS, AND EQUIPMENT SCHEDULE FOR ADDITIONAL REQUIREMENTS.
11. HOGEN UNIT REJECT WATER LINE TO EXTEND TO CATCH CAN BENEATH VENT VALVE ASSEMBLY. REFER TO SCHEMATIC AND DETAILS.
12. HYDROGEN SUPPLY LINE (FLEXIBLE) TO CONNECT TO HOGEN UNIT AND VENT VALVE ASSEMBLY AS SHOWN. REFER TO SCHEMATIC AND DETAILS.
13. HYDROGEN/WATER BYPRODUCT LINE (FLEXIBLE) TO CONNECT TO HOGEN UNIT AND VENT VALVE ASSEMBLY AS SHOWN. REFER TO SCHEMATIC AND DETAILS.
14. HEATED WALL VENT ASSEMBLY TO BE LOCATED ON EXTERIOR WALL MOUNT BOTTOM OF ASSEMBLY AT 2500MM A.F.F. WHERE SHOWN. REFER TO SCHEMATIC, DETAILS, AND EQUIPMENT SCHEDULE FOR ADDITIONAL REQUIREMENTS.
15. HYDROGEN/WATER BYPRODUCT LINE TO CONNECT TO VENT VALVE ASSEMBLY, RISE UP TO APPROXIMATELY 455 MM B.O.P. ON INTERIOR WALL AND EXTEND TO TO EXTERIOR WALL AS SHOWN. PROVIDE CONNECTION TO HEATED WALL VENT ASSEMBLY. LINE TO BE SECURED TO INTERIOR WALL USING SWAGELOK TUBING SUPPORTS. REFER TO SCHEMATIC AND DETAILS.
16. HYDROGEN STORAGE TANK TO BE LOCATED AS SHOWN. REFER TO SCHEMATIC, DETAILS, AND EQUIPMENT SCHEDULE FOR ADDITIONAL REQUIREMENTS. COORDINATE EXACT PLACEMENT WITH DEPARTMENTAL REPRESENTATIVE. REFER TO SPECIFICATIONS FOR SEISMIC RESTRAINT REQUIREMENTS.
17. HYDROGEN SUPPLY LINE TO CONNECT TO VENT VALVE ASSEMBLY AND EXTEND THROUGH WALL TO HYDROGEN STORAGE TANK ASSEMBLY IN INFLATION ROOM. PROVIDE CONNECTION TO HYDROGEN STORAGE TANK ASSEMBLY. LINE TO BE SECURED TO HOGEN ROOM AND INFLATION ROOM INTERIOR WALLS AND ALUMINUM FRAME EXTENDING FROM INFLATION ROOM WALL USING SWAGELOK TUBING SUPPORTS. ALUMINUM FRAME TO BE PROVIDED BY MECHANICAL CONTRACTOR. REFER TO SCHEMATICS AND DETAILS.
18. WALL VENT ASSEMBLY TO BE LOCATED ON EXTERIOR WALL, MOUNT BOTTOM OF ASSEMBLY AT 4500MM A.F.F. REFER TO SCHEMATIC, DETAILS, AND EQUIPMENT SCHEDULE FOR ADDITIONAL REQUIREMENTS.
19. HYDROGEN STORAGE TANK VENT LINE TO CONNECT TO VENT OUTLET PIPE AND EXTEND TO EXTERIOR WALL AS SHOWN. PROVIDE CONNECTION TO WALL VENT ASSEMBLY. LINE TO TO BE SECURED TO INTERIOR/EXTERIOR WALL USING SWAGELOK PIPE SUPPORTS. REFER TO SCHEMATIC AND DETAILS.
20. DISPENSING VALVE ASSEMBLY TO BE SECURED TO WALL WHERE SHOWN. REFER TO SCHEMATIC, DETAILS, AND EQUIPMENT SCHEDULE FOR ADDITIONAL REQUIREMENTS.
21. HYDROGEN SUPPLY LINE TO CONNECT TO STORAGE TANK AND EXTEND TO INTERIOR WALL AS SHOWN. PROVIDE CONNECTION TO DISPENSING VALVE ASSEMBLY. LINE TO BE SECURED TO INTERIOR WALL AND ALUMINUM FRAME EXTENDING FROM INFLATION ROOM WALL USING SWAGELOK TUBING SUPPORTS. ALUMINUM FRAME TO BE PROVIDED BY CONTRACTOR. REFER TO SCHEMATIC AND DETAILS.
22. HYDROGEN FILL BYPASS LINE TO BE PROVIDED AS SHOWN C/W SHUT OFF VALVE AND QUICK DISCONNECT COUPLER. LINE TO BE ACCESSIBLE AND SECURED TO WALL WHERE SHOWN. REFER TO SCHEMATIC AND EQUIPMENT SCHEDULE FOR ADDITIONAL REQUIREMENTS. COORDINATE EXACT PLACEMENT WITH DEPARTMENTAL REPRESENTATIVE.
23. WASTE WATER REMOVAL PIPE TO EXTEND THROUGH EXTERIOR WALL AT 900 MM ABOVE GRADE. PROVIDE 75 MM FEMALE STAINLESS STEEL LOCKING CAM FITTING C/W PLUG AND CHAIN
24. FRESH WATER PIPE TO EXTEND THROUGH EXTERIOR WALL AT 900 MM ABOVE GRADE. PROVIDE 38 MM MALE STAINLESS STEEL LOCKING CAM FITTING C/W CAP AND CHAIN
25. PIPING TO EXTEND 100 MM INTO THE TANK
26. PIPING TO EXTEND 100 MM ABOVE TANK BOTTOM
27. PROVIDE FLOAT SWITCH TO BE MOUNTED INSIDE TANK
28. PROVIDE PIPE SUPPORTS SUSPENDED FROM STRUCTURE
29. PROVIDE FIRESTOPPING MATERIAL AND SEAL TIGHT TO MATCH WALL RATING
30. CONTRACTOR TO PROVIDE AND INSTALL COUNTER APPROXIMATELY AS SHOWN. FINAL LOCATION TO BE VERIFIED WITH DEPARTMENTAL REPRESENTATIVE PRIOR TO INSTALLATION
31. CONTRACTOR TO PROVIDE HIGH LEVEL ALARM AND INDICATOR LIGHT TO BE LOCATED 2400MM A.F.F ON EXTERIOR OF THE BUILDING AND TIED TO WASTE WATER
32. CONTRACTOR TO PROVIDE HIGH LEVEL ALARM AND INDICATOR LIGHT TO BE LOCATED 2400MM A.F.F ON EXTERIOR OF THE BUILDING AND TIED TO WASTE WATER

Public Works and Government Services Canada
Travaux publics et Services gouvernementaux Canada

HHAngus
HHAngus & Associates Limited Consulting Engineers
1127 Leslie Street, Toronto, ON, M3C 2J6 Canada
www.hhangus.com | T 416 443 8200 | F 416 443 8290

LICENSED PROFESSIONAL ENGINEER
D. B. DOVAS
100178914
PROVINCE OF ONTARIO

FOR BID PURPOSES AND NOT FOR CONSTRUCTION

revision		date
05	ISSUED FOR TENDER	29/01/2016
04	ISSUED FOR 99% PROGRESS SET	04/12/2015
03	ISSUED FOR 66% PROGRESS SET	30/10/2015
02	ISSUED FOR 33% PROGRESS SET	09/10/2015
01	ISSUED FOR CLASS C ESTIMATE	13/05/2015

Do not scale drawings.
Verify all dimensions and conditions on site and immediately notify the Departmental Representative of all discrepancies.

A Detail No. / No. du détail
B drawing no. – where detail required / dessin no. – où détail exigé
C drawing no. – where detailed / dessin no. – où détaillé

project title / titre du projet
EGBERT — Ontario
6248 8TH LINE, LOL 1N0
NEW HYDROGEN GENERATION (HOGEN) AND BALLOON LAUNCHING BUILDING

drawing title / titre du dessin
FLOOR PLAN HYDROGEN/ WATER SYSTEM

drawn by / dessine par: HB
designed by / conc par: DD
approved by / approuve par: DD
bid / offre
project manager / administrateur de projets
project date / date du projet: JAN 29, 2016
project no. / no. du projet: R.071909.001
drawing no. / dessine no.: M100

GSC–A1 DATE PLOTTED: 2016–01–29 PLOT SCALE: 1:1 CAD FILE: HOGEN–M100–WATER_SYSTEM

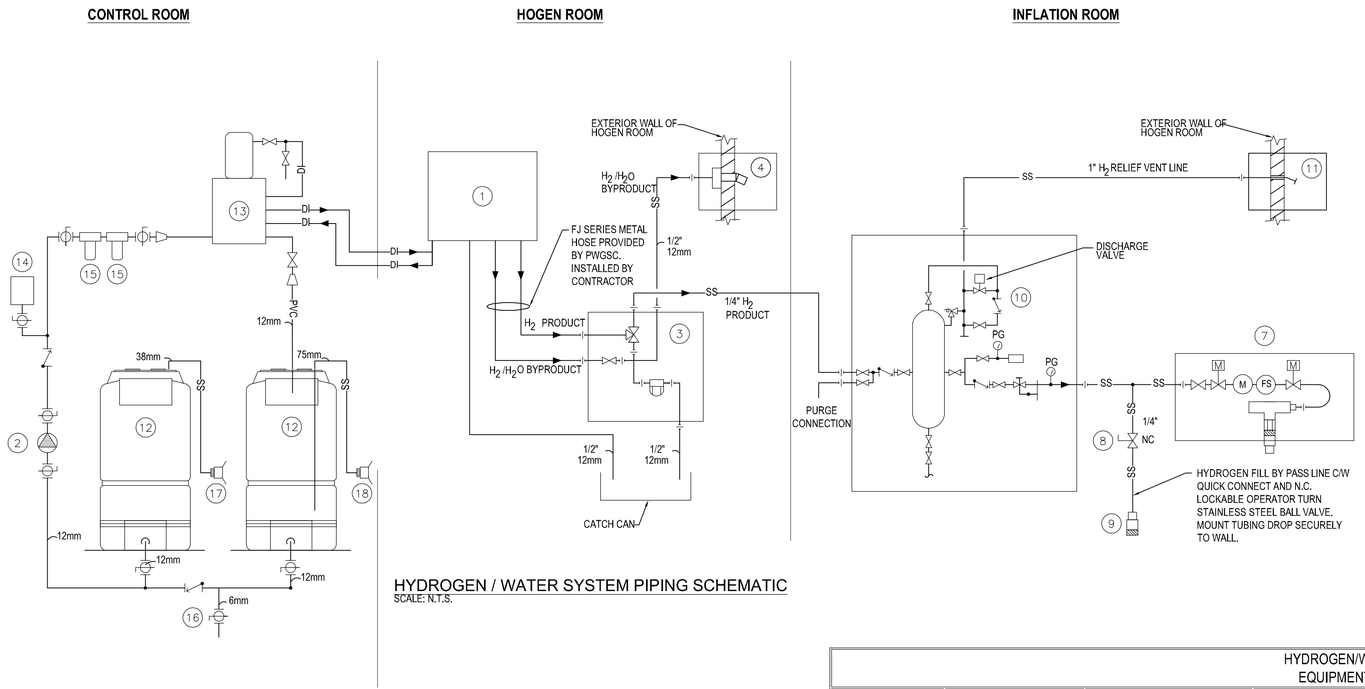

HYDROGEN / WATER SYSTEM PIPING SCHEMATIC
SCALE: N.T.S.

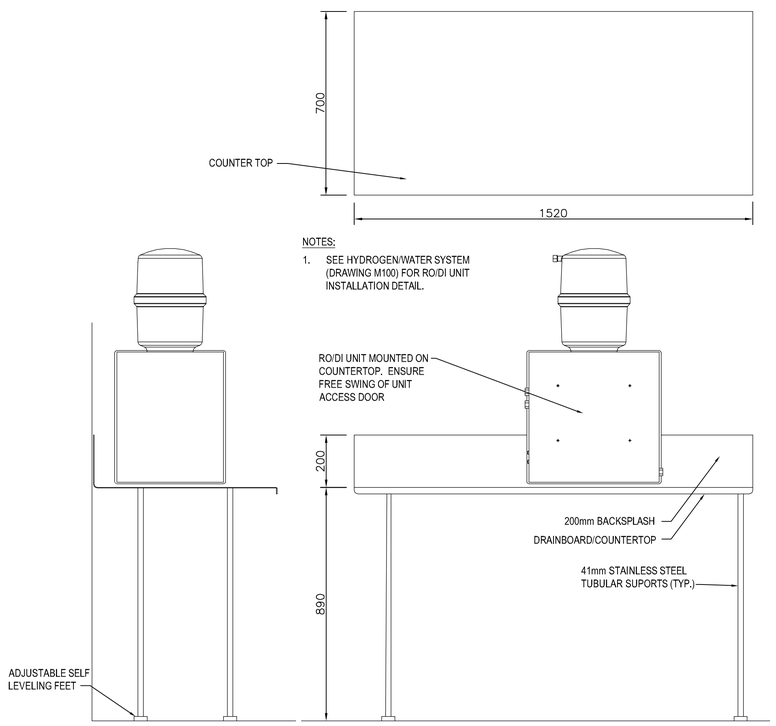

20 COUNTER DETAIL
N.T.S.

HYDROGEN/WATER SYSTEM EQUIPMENT SCHEDULE				
EQUIPMENT TAG	DESCRIPTION	MANUFACTURER MODEL NUMBER	NOTES	GOVERNMENT FURNISHED EQUIPMENT
1	HYDROGEN GENERATOR	HOGEN S40	SUPPLIED BY DEPARTMENTAL REPRESENTATIVE. INSTALLED BY CONTRACTOR IN ACCORDANCE WITH MANUFACTURER'S REQUIREMENTS. SEE DETAIL FOR ADDITIONAL INFO.	YES
2	WATER PUMP	SHURFLO 2088-594-144	SUPPLIED AND INSTALLED BY CONTRACTOR. 120V/60HZ/1Ø MOTOR, 75 L/MIN, AT 30 PSI DISCHARGE, BUILT-IN CHECK VALVE, PROVIDE WITH POWER CORD, REFER TO SPECIFICATIONS	
3	VENT VALVE ASSEMBLY MODULE C/W DRAIN PAN	SWAGELOK	SUPPLIED BY DEPARTMENTAL REPRESENTATIVE. INSTALLED BY CONTRACTOR IN ACCORDANCE WITH INSTALLATION INSTRUCTIONS. SECURE TO WALL (LOCATION SHOWN ON PLAN). MAXIMUM INSTALLATION HEIGHT TO BE 50mm BELOW THE H□BY-PRODUCT CONNECTION PORT ON THE HOGEN UNIT. CONNECT ASSEMBLY TO HOGEN H□PRODUCT AND BY-PRODUCT PORTS W/ SWAGELOK FJ SERIES METAL HOSE. PIPE ASSEMBLY DRAIN CONNECTION TO DRAIN PAN BENEATH UNIT. SEE DETAIL FOR ADDITIONAL INFO. HOSE PROVIDED BY PWGSC DEPARTMENTAL REPRESENTATIVE.	YES
4	HEATED WALL VENT ASSEMBLY	ENVIRONMENT CANADA	SUPPLIED BY DEPARTMENTAL REPRESENTATIVE. INSTALLED BY CONTRACTOR IN ACCORDANCE WITH INSTALLATION INSTRUCTIONS. MINIMUM MOUNTING HEIGHT 300mm BELOW GENERATION ROOM CEILING LEVEL. INSTALL W/ A 2° DOWNWARD SLOPE TO THE EXTERIOR. SEAL EXTERIOR WALL PENETRATION W/ EXTERIOR RATED SILICONE CAULKING. SEE DETAIL FOR ADDITIONAL INFO.	YES
7	DISPENSING VALVE ASSEMBLY MODULE	SWAGELOK	SUPPLIED BY DEPARTMENTAL REPRESENTATIVE. INSTALLED BY CONTRACTOR. SECURE TO WALL (LOCATION SHOWN ON PLAN), CONNECT MODULE TO H□STORAGE TANK USING 316SS 1/4", 0.035" WALL TUBING. SEE DETAIL FOR ADDITIONAL INFORMATION. SOLENOID VALVES, FLOW SWITCH, METERING VALVE, SHALL BE SUPPLIED WITH THE ASSEMBLY.	YES
8	STAINLESS STEEL LOCKABLE BALL VALVE (6.5mm)	SWAGELOK 43G SERIES	SUPPLIED BY DEPARTMENTAL REPRESENTATIVE. INSTALLED BY CONTRACTOR. 316 STAINLESS STEEL CONSTRUCTION, LOCKOFF, 6.5mm UNION.	YES
9	S.S. QUICK CONNECT	SWAGELOK SS-QFIGS-16PF	SUPPLIED BY DEPARTMENTAL REPRESENTATIVE. INSTALLED BY CONTRACTOR. 25mm (1") 316SS QUICK CONNECT FULL FLOW.	YES
10	HYDROGEN STORAGE TANK ASSEMBLY	INOX INDUSTRIES INC. P13-023-1	SUPPLIED BY DEPARTMENTAL REPRESENTATIVE. INSTALLED BY CONTRACTOR. ALL VALVES, GAUGES, FITTINGS, WILL BE PREASSEMBLED WITH TANK. SEE DETAIL FOR ADDITIONAL INFO.	YES
11	WALL VENT ASSEMBLY	SWAGELOK	SUPPLIED BY DEPARTMENTAL REPRESENTATIVE. INSTALLED BY CONTRACTOR IN ACCORDANCE WITH INSTALLATION INSTRUCTIONS. ASSEMBLY FLANGE TO BE MOUNTED, SEAL FLANGE WITH EXTERIOR RATED SILICONE CAULKING.	YES
12	WATER STORAGE TANK	EQUINOX E-325WS	SUPPLIED AND INSTALLED BY CONTRACTOR. 1476L POLYETHYLENE WATER STORAGE TANK, 1525mm X 750mm X 1500mm(H), POLYETHYLENE LID, 12mm THREADED PVC OUTLET AT NEAR THE OF BOTTOM OF TANK. REFER TO SPECIFICATIONS.	
13	RO/DI WATER PURIFICATION SYSTEM	AQUA SOLUTIONS H-40-C	SUPPLIED BY DEPARTMENTAL REPRESENTATIVE. INSTALLED BY CONTRACTOR IN ACCORDANCE WITH MANUFACTURER'S REQUIREMENTS. SEE DETAIL FOR ADDITIONAL INFO.	YES
14	ACCUMULATE TANK	SHURFLO	SUPPLIED AND INSTALLED BY CONTRACTOR. 8L STAINLESS STEEL, 20 PSI PRECHARGE PRESSURE. REFER TO SPECIFICATIONS.	
15	WATER FILTER HOLDER	---	SUPPLIED AND INSTALLED BY CONTRACTOR. C/W WALL BRACKET, PROVISIONS FOR MOUNTING A PRESSURE DIFFERENTIAL SENSING GAUGE. HOLDS 62.5mm DIA. x 250mm FILTER CARTRIDGE. REFER TO SPECIFICATIONS.	
16	SAMPLING VALVE	---	SUPPLIED AND INSTALLED BY CONTRACTOR. 1/4 TURN PVC VALVE. REFER TO SPECIFICATIONS.	
17	STAINLESS STEEL 38 MM MALE LOCKING CAM FITTING	---	STAINLESS STEEL CONSTRUCTION, MALE COUPLER WITH FEMALE NPT, C/W CAP AND RETENTION CHAIN. SUPPLIED AND INSTALLED BY CONTRACTOR.	
18	STAINLESS STEEL 75 MM FEMALE LOCKING CAM FITTING	---	STAINLESS STEEL CONSTRUCTION, FEMALE COUPLER WITH FEMALE NPT, C/W PLUG AND RETENTION CHAIN. SUPPLIED AND INSTALLED BY CONTRACTOR.	
19	CONTROL TABLE CONSOLE	HAMMOND 1471C36	SUPPLIED AND INSTALLED BY CONTRACTOR. 1220mm X 460mm X 915mm CABINET. REFER TO SPECIFICATIONS.	
20	COUNTER	--	SUPPLIED AND INSTALLED BY CONTRACTOR. PROVIDE 304 STAINLESS STEEL COUNTER TOP REFER TO SPECIFICATIONS AND DETAIL	

Public Works and Government Services Canada
Travaux publics et Services gouvernementaux Canada

HHAngus
HHAngus & Associates Limited Consulting Engineers
1127 Leslie Street, Toronto, ON, M3C 2J6 · Canada
www.hhangus.com | T 416 443 8200 | F 416 443 8290

LICENSED PROFESSIONAL ENGINEER
D.B. DOVAS
100178914
PROVINCE OF ONTARIO

FOR BID PURPOSES AND NOT FOR CONSTRUCTION

revision		date
05	ISSUED FOR TENDER	29/01/2016
04	ISSUED FOR 99% PROGRESS SET	04/12/2015
03	ISSUED FOR 66% PROGRESS SET	30/10/2015
02	ISSUED FOR 33% PROGRESS SET	09/10/2015
01	ISSUED FOR CLASS C ESTIMATE	13/05/2015

Do not scale drawings.
Verify all dimensions and conditions on site and immediately notify the Departmental Representative of all discrepancies.

A B C
A Detail No. / No. du détail
B drawing no. – where detail required / dessin no. – où détail exigé
C drawing no. – where detailed / dessin no. – où détaillé

project title / titre du projet
EGBERT Ontario
6248 8TH LINE, LOL 1N0
NEW HYDROGEN GENERATION (HOGEN) AND BALLOON LAUNCHING BUILDING

drawing title / titre du dessin
HYDROGEN/WATER SYSTEM SCHEMATIC & EQUIPMENT SCHEDULE

drawn by / dessine par: HB
designed by / conc par: DD
approved by / approuve par: DD
bid / offre
project manager / administrateur de projets
project date / date du projet: JAN 29, 2016
project no. / no. du projet: R.071909.001
drawing no. / dessine no.: M200

04 11

0 10 20 30 40 50 60 70 80 90 100 110 120 130 140 150 160 170 180 190 200 millimetres

HYDROGEN STORAGE TANK NOTES:

1. HYDROGEN STORAGE TANK AND INSTRUCTIONS PROVIDED BY DEPARTMENTAL REPRESENTATIVE. CONTRACTOR TO INSTALL IN STRICT ACCORDANCE WITH INSTRUCTIONS.
2. ALL DIMENSIONS SHOWN ARE FOR REFERENCE ONLY.
3. INSTALLATION CLEARANCES MUST BE OBSERVED TO MAINTAIN ACCESS FOR SERVICING. REFER TO DETAIL.
4. REFER TO INSTALLATION INSTRUCTIONS CONNECTION POINTS AND ADDITIONAL DETAILS.
5. HYDROGEN STORAGE TANK WEIGHT; 357KG.

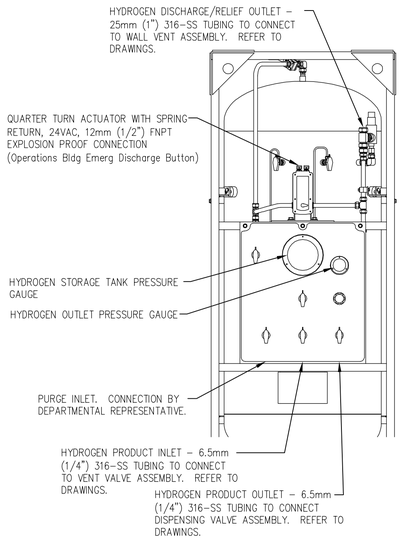

10 DETAIL - HYDROGEN STORAGE TANK
N.T.S.

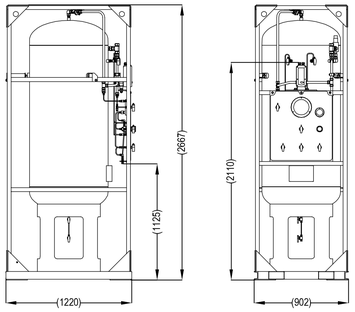

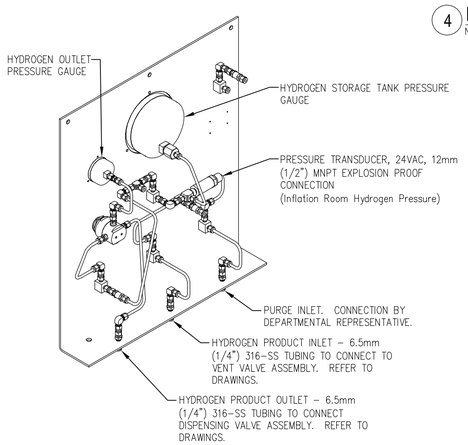

HEATED WALL VENT ASSEMBLY NOTES:

1. HEATED WALL VENT ASSEMBLY AND INSTALLATION INSTRUCTIONS PROVIDED BY DEPARTMENTAL REPRESENTATIVE. CONTRACTOR TO INSTALL IN STRICT ACCORDANCE WITH INSTALLATION INSTRUCTIONS.
2. HEATED WALL VENT ASSEMBLY TO BE INSTALLED IN EXTERIOR WALL OF HOGEN ROOM. REFER TO DRAWINGS.
3. HEATED WALL VENT ASSEMBLY TUBE TO BE SLOPED TOWARDS BUILDING EXTERIOR AT ANGLE SHOWN WITH REFERENCE TO TRUE LEVEL.
4. SEALANT TO BE APPLIED AT POINTS B, C, AND D. SEALANT TYPE: RTV SILICONE.
5. POWER WIRING TO BE CONNECTED THROUGH COUPLING ON TOP OF CONTROL BOX TO LABELED WIRES AND GROUNDED. USE 14AWG WIRE. CONNECTION TO BE APPROVED FOR USE IN A CLASS 1, ZONE 2, GROUP IIC ENVIRONMENT.
6. CONTROL WIRING TO BE CONNECTED THROUGH COUPLING ON TOP OF CONTROL BOX TO LABELED WIRES. USE 20AWG WIRE. CONNECTION TO BE APPROVED FOR USE IN A CLASS 1, ZONE 2, GROUP IIC ENVIRONMENT.
7. SWAGELOK FITTINGS MAY BE POSITIONED ROTATIONALLY PRIOR TO TIGHTENING.

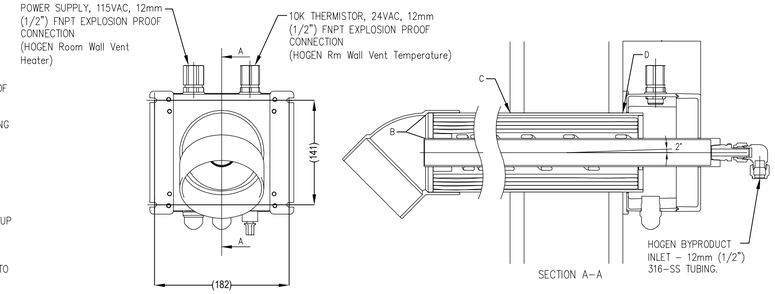

4 DETAIL - HEATED WALL VENT ASSEMBLY
N.T.S.

VENT VALVE ASSEMBLY NOTES:

1. VENT VALVE ASSEMBLY TO BE PROVIDED BY DEPARTMENTAL REPRESENTATIVE, AND INSTALLED BY CONTRACTOR.
2. ALL DIMENSIONS SHOWN ARE FOR REFERENCE ONLY.
3. VENT VALVE ASSEMBLY MUST BE LOCATED TO THE RIGHT SIDE OF THE HOGEN AS SHOWN ON DRAWINGS.
4. VENT VALVE ASSEMBLY TO BE MOUNTED TO WALL AND FLOOR USING APPROPRIATE HARDWARE.
5. ACTUAL MOUNTING POINTS MAY VARY SLIGHTLY.

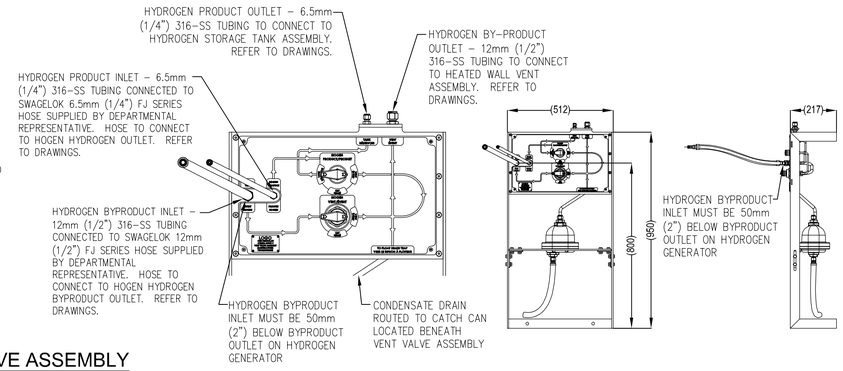

3 DETAIL - VENT VALVE ASSEMBLY
N.T.S.

HYDROGEN GENERATOR (HOGEN) NOTES:

1. HYDROGEN GENERATOR (HOGEN) AND MANUFACTURER'S INSTRUCTIONS PROVIDED BY DEPARTMENTAL REPRESENTATIVE. CONTRACTOR TO INSTALL IN STRICT ACCORDANCE WITH MANUFACTURER'S INSTRUCTIONS.
2. ALL DIMENSIONS SHOWN ARE FOR REFERENCE ONLY.
3. INSTALLATION CLEARANCES MUST BE OBSERVED TO MAINTAIN ACCESS FOR SERVICING. REFER TO DETAIL.
4. REFER TO HOGEN S-40 INSTALLATION MANUAL FOR CONNECTION POINTS AND ADDITIONAL DETAILS (PD-0100-0001 REV M).
5. AC POWER FEED REQUIRES AIR TIGHT CONNECTION TO MAINTAIN PURGE PRESSURE IN CABINET. COORDINATE WITH ELECTRICAL CONTRACTOR.
6. HOGEN WEIGHT; 216KG. SHIPPING WEIGHT 295 KG.

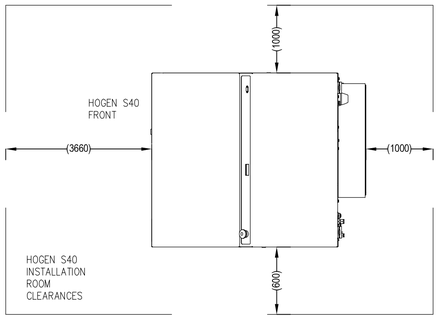

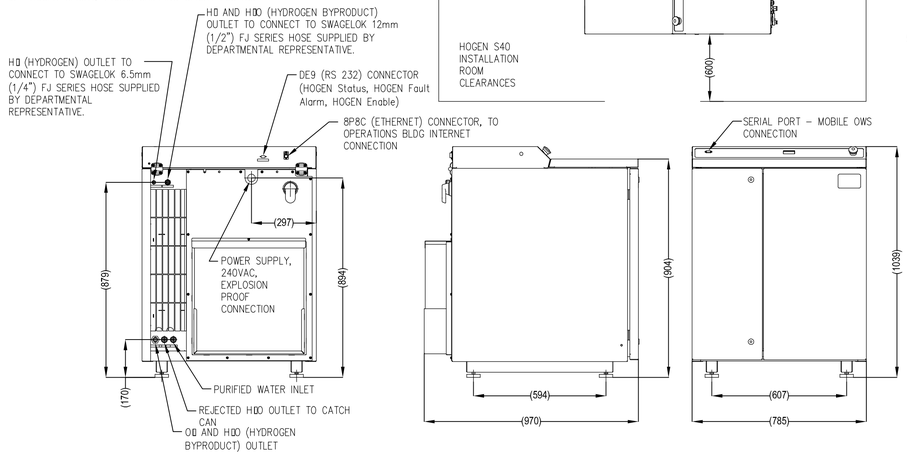

1 DETAIL - HYDROGEN GENERATOR (HOGEN)
N.T.S.

DISPENSING VALVE ASSEMBLY NOTES:

1. DISPENSING VALVE ASSEMBLY TO BE PROVIDED BY DEPARTMENTAL REPRESENTATIVE, AND INSTALLED BY CONTRACTOR.
2. ALL DIMENSIONS SHOWN ARE FOR REFERENCE ONLY.
3. CONNECTIONS TO BOTH SOLENOID VALVES AND FLOW SWITCH TO BE MADE WITH FLEXIBLE CONDUIT APPROVED FOR USE IN A CLASS 1, ZONE 1, GROUP IIC ENVIRONMENT.
4. DISPENSING VALVE ASSEMBLY TO BE MOUNTED TO WALL AND FLOOR USING APPROPRIATE HARDWARE.
5. ACTUAL MOUNTING POINTS MAY VARY SLIGHTLY.

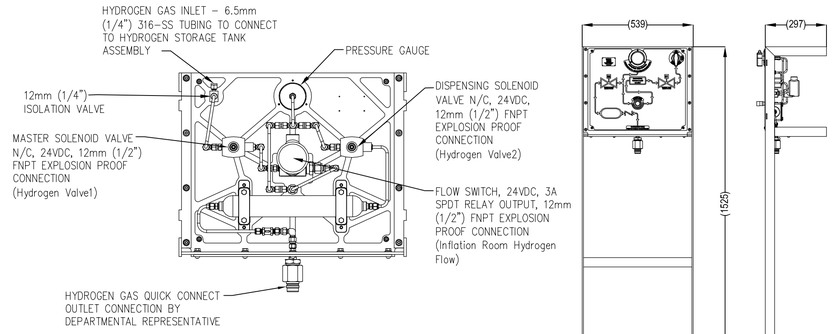

7 DETAIL - DISPENSING VALVE ASSEMBLY
N.T.S.

RO/DI WATER PURIFICATION SYSTEM NOTES:

1. WATER PURIFICATION UNIT AND MANUFACTURER'S INSTRUCTIONS PROVIDED BY DEPARTMENTAL REPRESENTATIVE. CONTRACTOR TO INSTALL IN STRICT ACCORDANCE WITH MANUFACTURER'S INSTRUCTIONS.
2. ALL DIMENSIONS SHOWN ARE FOR REFERENCE ONLY.
3. PURITY METER SENSOR (NOT SHOWN) MOUNTED ABOVE PORTS ON RIGHT SIDE OF CABINET.
4. REFER TO AQUA SOLUTIONS OPERATING MANUAL FOR CONNECTION POINTS AND ADDITIONAL DETAILS (MODEL H-40-C).

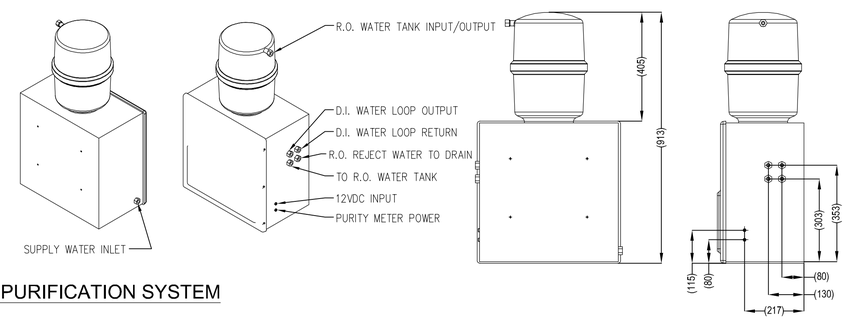

13 DETAIL - RO/DI WATER PURIFICATION SYSTEM
N.T.S.

Public Works and Government Services Canada
Travaux publics et Services gouvernementaux Canada

HHAngus
HHAngus & Associates Limited Consulting Engineers
1127 Leslie Street, Toronto, ON, M3C 2J6 Canada
www.hhangus.com | T 416 443 8200 | F 416 443 8290

LICENSED PROFESSIONAL ENGINEER
D.B. DOVAS
100178914
PROVINCE OF ONTARIO

FOR BID PURPOSES AND NOT FOR CONSTRUCTION

revision		date
05	ISSUED FOR TENDER	29/01/2016
04	ISSUED FOR 99% PROGRESS SET	04/12/2015
03	ISSUED FOR 66% PROGRESS SET	30/10/2015
02	ISSUED FOR 33% PROGRESS SET	09/10/2015
01	ISSUED FOR CLASS C ESTIMATE	13/05/2015

Do not scale drawings.
Verify all dimensions and conditions on site and immediately notify the Departmental Representative of all discrepancies.

A Detail No. / No. du détail
B drawing no. – where detail required / dessin no. – où détail exigé
C drawing no. – where detailed / dessin no. – où détaillé

project title / titre du projet
EGBERT — Ontario
6248 8TH LINE, L0L 1N0

NEW HYDROGEN GENERATION (HOGEN) AND BALLOON LAUNCHING BUILDING

drawing title / titre du dessin
HYDROGEN/WATER SYSTEM GOVERNMENT FURNISHED EQUIPMENT DETAILS

drawn by / dessine par: HB
designed by / conc par: DD
approved by / approuve par: DD
bid / offre
project manager / administrateur de projets
project date / date du projet: JAN 29, 2016
project no. / no. du projet: R.071909.001
drawing no. / dessine no.: M201

GSC-A1 DATE PLOTTED: 2016-01-29 PLOT SCALE: 1:1 CAD FILE: HOGEN-M201-DETAILS

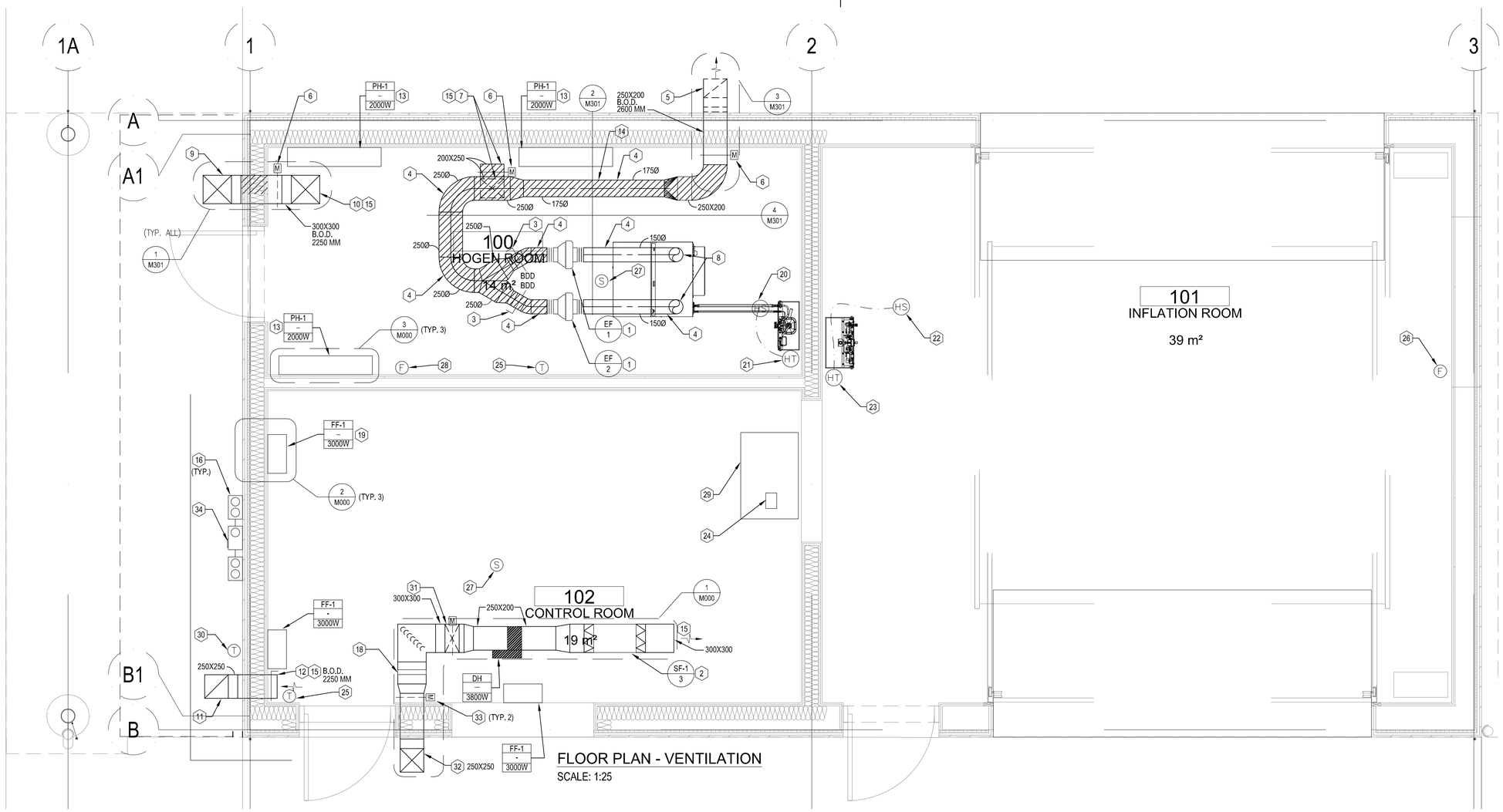

FLOOR PLAN - VENTILATION

SCALE: 1:25

DRAWING NOTES:

1. PROVIDE AND INSTALL INLINE SPARK PROOF EXHAUST FAN AS SHOWN C/W FLEXIBLE DUCT CONNECTIONS AND MOUNTING BRACKETS. FAN TO BE SUSPENDED FROM UNDERSIDE OF CEILING. REFER TO DETAIL EQUIPMENT SCHEDULE, AND SPECIFICATIONS FOR ADDITIONAL REQUIREMENTS.
2. PROVIDE AND INSTALL INLINE SUPPLY FAN AS SHOWN C/W FLEXIBLE DUCT CONNECTIONS AND MOUNTING BRACKETS. FAN AND DUCTWORK TO BE SUSPENDED FROM UNDERSIDE OF CEILING MINIMUM OF 2500MM TO BOTTOM OF THE UNIT AND ASSOCIATED DUCTWORK
3. BACK DRAFT DAMPER OF ALL ALUMINUM CONSTRUCTION TO BE LOCATED AS SHOWN.
4. DUCT WORK TO BE OF ALL ALUMINUM CONSTRUCTION AND BE SUPPORTED FROM UNDERSIDE OF STRUCTURE AS SHOWN WITH BOTTOM. PROVIDE OF DUCT AT 2443 MM A.F.F. PROVIDE THERMAL INSULATION OVER ENTIRE LENGTH DOWNSTREAM OF SPARK PROOF EXHAUST FAN.
5. EXHAUST DUCT MAIN TO EXTEND THROUGH EXTERIOR WALL AT HIGH LEVEL AS SHOWN. DUCT TO TURN DOWN A MINIMUM OF 1200MM ON BUILDING EXTERIOR C/W WITH ALUMINUM BIRD SCREEN AT DUCT OPENING. INSULATE BACK FROM WALL PENETRATION AS SHOWN. REFER TO DETAIL.
6. PROVIDE AND INSTALL 120V MOTORIZED DAMPER OF ALL ALUMINUM CONSTRUCTION WITHIN DUCT AS SHOWN C/W SPARK PROOF ACTUATOR. REFER TO DETAILS AND SPECIFICATIONS FOR ADDITIONAL REQUIREMENTS.
7. RECIRCULATION DUCT DROP TO BE LOCATED AS SHOWN, AND OFFSET TO BE TIGHT AGAINST WALL, DOWNSTREAM OF MOTORIZED DAMPER. DUCT TO EXTEND TO 450MM ABOVE FINISHED FLOOR C/W ALUMINUM WIRE MESH GRILLE AT OPENING. REFER TO DETAIL.
8. EXHAUST DUCT INTAKE TO TURN UPWARDS TO FACE CEILING AS SHOWN. PROVIDE ALUMINUM WIRE MESH GRILLE AT EXHAUST DUCT OPENING. DUCT OPENING TO BE A MINIMUM OF 100 MM BELOW CEILING.
9. SUPPLY AIR DUCT TO EXTEND THROUGH EXTERIOR WALL AT HIGH LEVEL AS SHOWN. DUCT TO TURN DOWN AND EXTEND TO A MAXIMUM HEIGHT OF 1200MM ABOVE GRADE ON BUILDING EXTERIOR C/W ALUMINUM BIRD SCREEN AT DUCT OPENING. REFER TO DETAIL.
10. SUPPLY AIR DUCT TO TURN DOWN ON BUILDING INTERIOR AND EXTEND TO 450MM ABOVE FINISHED FLOOR C/W ALUMINUM WIRE MESH GRILLE AT DUCT OPENING. PROVIDE MOTORIZED DAMPER AND FILTER BANK OF ALL ALUMINUM CONSTRUCTION ON DUCT DROP. TRANSITION DUCT TO 175MM ROUND BELOW FILTER BANK TO ALLOW INSTALLATION OF AIRFLOW MEASUREMENT STATION. INSULATE OVER ENTIRE LENGTH BACK FROM WALL PENETRATION AS SHOWN. REFER TO DETAIL.
11. RELIEF AIR DUCT TO EXTEND THROUGH EXTERIOR WALL AT HIGH LEVEL AS SHOWN. DUCT TO TURN DOWN AND EXTEND TO A MAXIMUM HEIGHT OF 1200MM ABOVE GRADE ON BUILDING EXTERIOR C/W ALUMINUM BIRD SCREEN AT DUCT OPENING.
12. RELIEF AIR DUCT WITH BAROMETRIC DAMPER SET TO 0.1" W.G. TO OPEN DUCT TO BE TIGHT TO INTERIOR WALL. PROVIDE 25MM DUCT INSULATION OVER ENTIRE LENGTH THROUGH THE PENETRATION. FROM INTERIOR TO EXTERIOR, TERMINATE INSULATION OUTSIDE AT WALL EDGE AND PROVIDE WATER TIGHT SEAL.
13. CONTRACTOR TO PROVIDE AND INSTALLSPARK PROOF ELECTRIC HEATER OF SIZE INDICATED AS SHOWN. CONTROL WIRING TO BE BY CONTRACTOR. COORDINATE INSTALLATION WITH ELECTRICAL. REFER TO CONTROL SCHEMATICS AND SPECIFICATIONS FOR ADDITIONAL REQUIREMENTS.
14. DUCT TO BE ROUTED EXACTLY AS SHOWN, INCLUDING A MINIMUM 1400MM STRAIGHT SECTION TO ACCOMMODATE AIR FLOW MEASUREMENT SENSOR. REFER TO SECTION FOR ADDITIONAL DETAILS.
15. PROVIDE OPEN-ENDED DUCT WITH 12MMX12MM MESH COVER.
16. MOUNT EXTERIOR WARNING LIGHTS PER MANUFACTURER RECOMMENDATION COORDINATE INSTALLATION WITH DEPARTMENT REPRESENTATIVE PRIOR TO INSTALL PROVIDE A NEMA 4 ENCLOSURE, 250(W)X150(H)X150(D) SEPARATE EACH ENCLOSURE BY 75MM AND DIVISION 26 TO PROVIDE CONDUIT TO BEACONS AND HORN
17. PROVIDE AND INSTALL NEW ALUMINUM GRAVITY VENT C/W ALUMINUM BIRD SCREEN ON ROOF OVER EXISTING ROOF PENETRATION. MODIFY ROOF OPENING TO SUIT. REFER TO EQUIPMENT SCHEDULES.
18. PROVIDE A 300X300X25 DISPOSABLE PANEL MERV 8 FILTER C/W FILTER RACK.
19. CONTRACTOR TO PROVIDE AND INSTALL NEW ELECTRIC FORCE FLOW HEATER OF SIZE INDICATED AS SHOWN. CONTROL WIRING BY CONTRACTOR. REFER TO CONTROL SCHEMATICS AND SPECIFICATIONS FOR ADDITIONAL REQUIREMENTS. MOUNT BOTTOM 250MM A.F.F.
20. HOGEN ROOM REMOTE HYDROGEN GAS SENSOR TO BE MOUNTED ON ARM OF ALL ALUMINUM CONSTRUCTION ABOVE HOGEN UNIT AS SHOWN, WITHIN 150MM OF CEILING. ARM TO BE SECURED TO INTERIOR WALL. EXACT LOCATION TO BE CONFIRMED WITH DEPARTMENTAL REPRESENTATIVE. REFER CONTROL SCHEMATICS AND SPECIFICATIONS FOR ADDITIONAL REQUIREMENTS.
21. HOGEN ROOM HYDROGEN GAS TRANSMITTER TO BE MOUNTED AT EYE LEVEL AS SHOWN. EXACT LOCATION TO BE CONFIRMED WITH DEPARTMENTAL REPRESENTATIVE. REFER CONTROL SCHEMATICS AND SPECIFICATIONS FOR ADDITIONAL REQUIREMENTS.
22. INFLATION ROOM REMOTE HYDROGEN GAS SENSOR TO BE MOUNTED ON ARM OF ALL ALUMINUM CONSTRUCTION, APPROXIMATELY 300MM ABOVE TOP OF HYDROGEN STORAGE TANK AS SHOWN. ARM TO BE SECURED TO INTERIOR WALL. EXACT LOCATION TO BE CONFIRMED WITH DEPARTMENTAL REPRESENTATIVE. REFER TO CONTROL SCHEMATICS AND SPECIFICATIONS FOR ADDITIONAL REQUIREMENTS.
23. INFLATION ROOM HYDROGEN GAS TRANSMITTER TO BE MOUNTED AT EYE LEVEL AS SHOWN. EXACT LOCATION TO BE CONFIRMED WITH DEPARTMENTAL REPRESENTATIVE. REFER TO CONTROL SCHEMATICS AND SPECIFICATIONS FOR ADDITIONAL REQUIREMENTS.
24. PROPOSED LOCATION FOR CONTROL SYSTEM LCD PANEL. REFER TO CONTROL DRAWING AND CONTROL TABLE CONSOLE DETAIL.
25. DDC TEMPERATURE SENSOR TO BE LOCATED ON WALL AS SHOWN. REFER CONTROL SCHEMATICS AND SPECIFICATIONS FOR ADDITIONAL REQUIREMENTS.
26. FIRE AND FLAME SENSOR TO BE LOCATED ON WALL AT 2800MM A.F.F. TO PROVIDE UNOBSTRUCTED VIEW OF HYDROGEN STORAGE TANK AND DISPENSING VALVE ASSEMBLY. REFER TO CONTROL SCHEMATICS AND SPECIFICATIONS FOR ADDITIONAL REQUIREMENTS.
27. SMOKE DETECTOR TO BE LOCATED APPROXIMATELY AS SHOWN. COORDINATE EXACT LOCATION ON SITE. REFER TO CONTROL SCHEMATICS AND SPECIFICATIONS FOR ADDITIONAL REQUIREMENTS.
28. FIRE AND FLAME SENSOR TO BE LOCATED ON WALL AT SUITABLE HEIGHT TO PROVIDE UNOBSTRUCTED VIEW OF HOGEN UNIT, VENT VALVE ASSEMBLY, AND HEATED WALL VENT ASSEMBLY. REFER TO CONTROL SCHEMATICS AND SPECIFICATIONS FOR ADDITIONAL REQUIREMENTS.
29. CONTRACTOR TO PROVIDE AND INSTALL CONTROL TABLE CONSOLE, APPROXIMATELY AS SHOWN. COORDINATE FINAL LOCATION WITH DEPARTMENTAL REPRESENTATIVE. REFER TO EQUIPMENT TAG 19 ON M-200 FOR ADDITIONAL DETAILS
30. PROVIDE OUTSIDE AIR TEMPERATURE SENSOR MOUNTED 2032MM ABOVE GRADE WITH SHIELD WIRED TO THE BAS
31. PROVIDE OPEN RETURN DUCT DOWN, EXTEND MINIMUM 150MM BELOW BOTTOM OF DUCT AND PROVIDE MOTORIZED MODULATING DAMPER WITH 12MMX12MM MESH SCREEN OVER OPENING.
32. SUPPLY DUCT MAIN TO EXTEND THROUGH EXTERIOR WALL AT HIGH LEVEL AS SHOWN. DUCT TO TURN DOWN A MINIMUM OF 1200MM ON BUILDING EXTERIOR C/W WITH ALUMINUM BIRD SCREEN AT DUCT OPENING. INSULATE BACK FROM WALL PENETRATION AS SHOWN.
33. PROVIDE END SWITCH ON DAMPER, INTERLOCK WITH SF-1, PROVIDE CONTROL RELAY FROM 24V TRANSFORMER PROVIDED BY MANUFACTURER OF SF-1
34. MOUNT EXTERIOR AUDIBLE HORN IN THE CENTER OF THE WARNING LIGHTS INSTALL PER MANUFACTURER'S RECOMMENDATION

Public Works and Government Services Canada
Travaux publics et Services gouvernementaux Canada

HHAngus
HHAngus & Associates Limited Consulting Engineers
1127 Leslie Street, Toronto, ON, M3C 2J6 Canada
www.hhangus.com | T 416 443 8200 | F 416 443 8290

LICENSED PROFESSIONAL ENGINEER
D.B. DOVAS
100178914
PROVINCE OF ONTARIO

FOR BID PURPOSES AND NOT FOR CONSTRUCTION

revision		date
05	ISSUED FOR TENDER	29/01/2016
04	ISSUED FOR 99% PROGRESS SET	04/12/2015
03	ISSUED FOR 66% PROGRESS SET	30/10/2015
02	ISSUED FOR 33% PROGRESS SET	09/10/2015
01	ISSUED FOR CLASS C ESTIMATE	13/05/2015

Do not scale drawings.
Verify all dimensions and conditions on site and immediately notify the Departmental Representative of all discrepancies.

A B C
A Detail No. / No. du détail
B drawing no. – where detail required / dessin no. – où détail exigé
C drawing no. – where detailed / dessin no. – où détaillé

project title / titre du projet
EGBERT — Ontario
6248 8TH LINE, LOL 1NO
NEW HYDROGEN GENERATION (HOGEN) AND BALLOON LAUNCHING BUILDING

drawing title / titre du dessin
FLOOR PLAN
VENTILATION SYSTEM

drawn by / dessine par: HB
designed by / conc par: DD
approved by / approuve par: DD
bid / offre
project manager / administrateur de projets
project date / date du projet: JAN 29, 2016
project no. / no. du projet: R.071909.001
drawing no. / dessine no.: M300

FAN SCHEDULE

TAG	LOCATION	MAKE	MODEL	TYPE	DRIVE	FLOW (CFM)	FLOW (L/S)	E.S.P. (IN. H20)	E.S.P. (Pa)	SPEED (RPM)	ELECTRICAL KW/VOLTS	SOUND	NOTES
EF-1	HOGEN ROOM	MARC	ISFX160	INLINE, BACKWARD INCLINED	DIRECT	150	71	1.0	249	2750	0.13/120	-	PLASTIC CONSTRUCTION, CSA CERTIFICATION FOR CLASS 1, ZONE 2, GROUP IIC OPERATION, C/W INDOOR MOUNTING BRACKET
EF-2	HOGEN ROOM	MARC	ISFX160	INLINE, BACKWARD INCLINED	DIRECT	150	71	1.0	249	2750	0.13/120	-	PLASTIC CONSTRUCTION, CSA CERTIFICATION FOR CLASS 1, ZONE 2, GROUP IIC OPERATION, C/W INDOOR MOUNTING BRACKET
SF-1	CONTROL ROOM	N/A	N/A	INLINE CABINET	DIRECT	200	94.4	0.6	150	1681	0.19/120	1.4 SONES	GALVANIZED STEEL CONSTRUCTION, ACOUSTICALLY LINED CABINET, C/W EC MOTOR WITH EXTERNAL SPEED CONTROL, PROVIDE WITH 24 VOLT TRANSFORMER

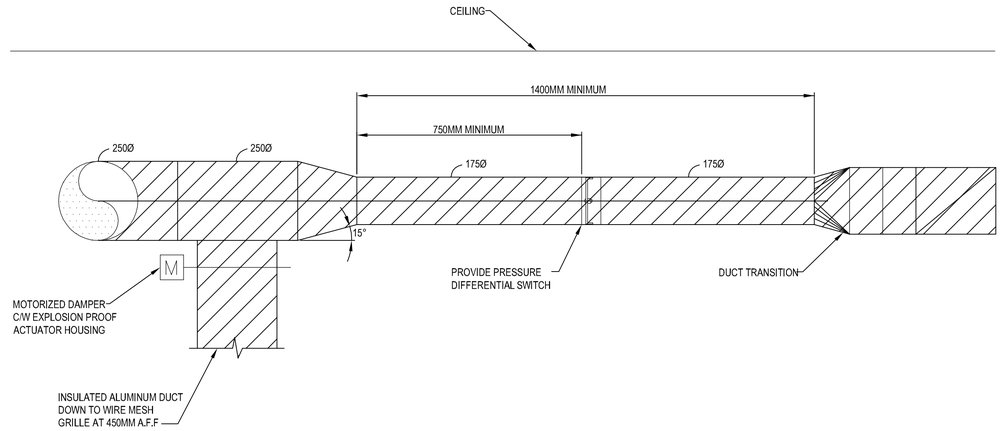

4 / M301 HOGEN ROOM EXHAUST SYSTEM DETAIL
N.T.S.

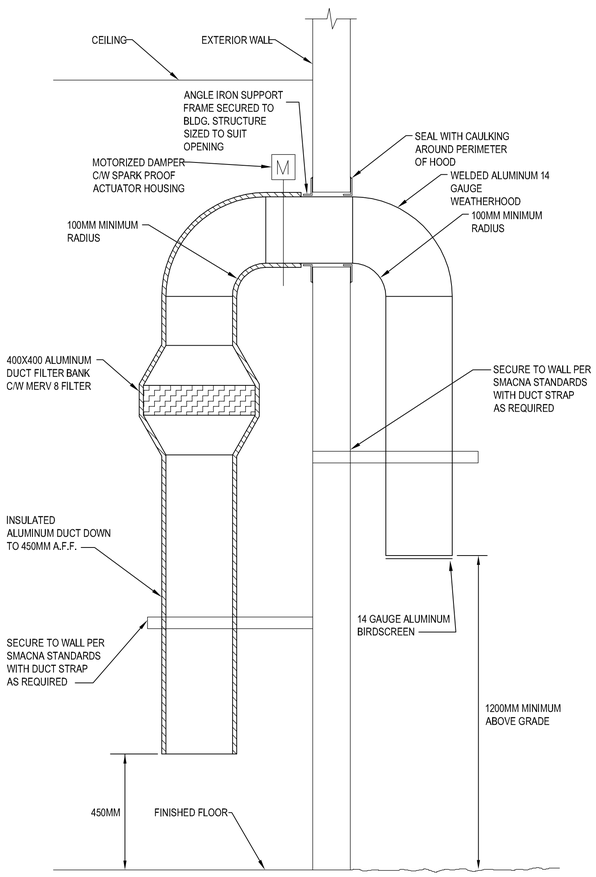

1 / M301 HOGEN ROOM FRESH AIR INTAKE DETAIL
N.T.S.

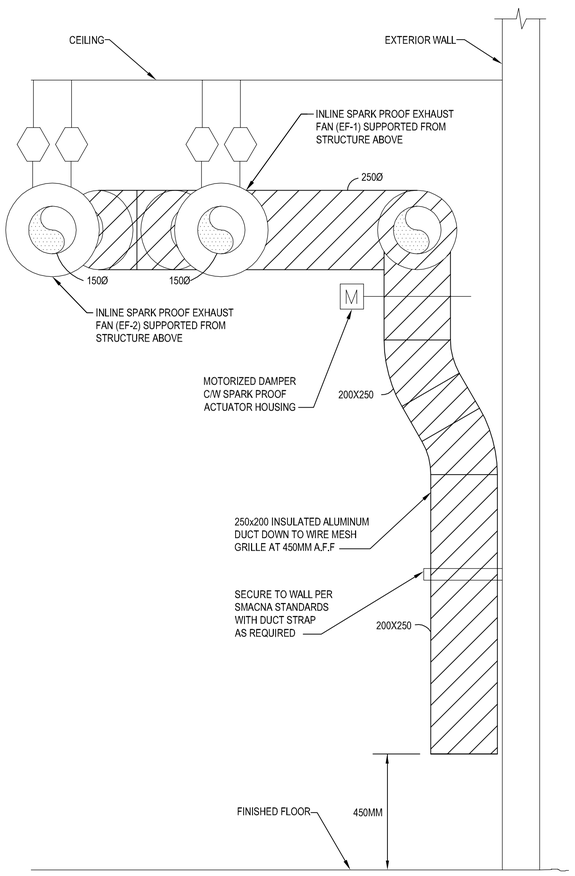

2 / M301 HOGEN ROOM EXHAUST SYSTEM DETAIL
N.T.S.

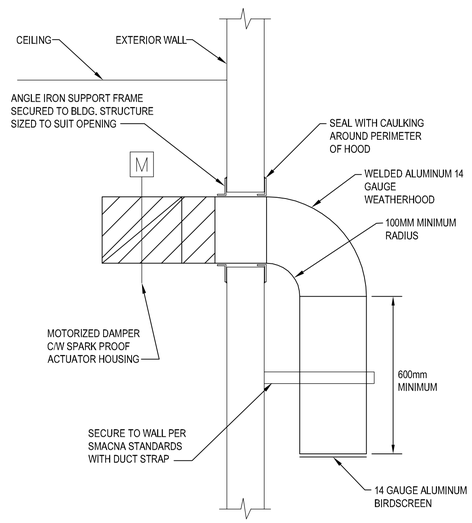

3 / M301 HOGEN ROOM EXHAUST SYSTEM DETAIL
N.T.S.

Public Works and Government Services Canada
Travaux publics et Services gouvernementaux Canada

HHAngus
HHAngus & Associates Limited Consulting Engineers
1127 Leslie Street, Toronto, ON, M3C 2J6 Canada
www.hhangus.com | T 416 443 8200 | F 416 443 8290

LICENSED PROFESSIONAL ENGINEER
D.B. DOVAS
100178914
PROVINCE OF ONTARIO

FOR BID PURPOSES AND NOT FOR CONSTRUCTION

revision		date
05	ISSUED FOR TENDER	29/01/2016
04	ISSUED FOR 99% PROGRESS SET	04/12/2015
03	ISSUED FOR 66% PROGRESS SET	30/10/2015
02	ISSUED FOR 33% PROGRESS SET	09/10/2015
01	ISSUED FOR CLASS C ESTIMATE	13/05/2015

Do not scale drawings.
Verify all dimensions and conditions on site and immediately notify the Departmental Representative of all discrepancies.

A / B C
A Detail No. / No. du détail
B drawing no. – where detail required / dessin no. – où détail exigé
C drawing no. – where detailed / dessin no. – où détaillé

project title / titre du projet
EGBERT Ontario
6248 8TH LINE, LOL 1N0

NEW HYDROGEN GENERATION (HOGEN) AND BALLOON LAUNCHING BUILDING

drawing title / titre du dessin
VENTILATION SYSTEM DETAILS & EQUIPMENT SCHEDULE

drawn by / dessine par: HB
designed by / conc par: DD
approved by / approuve par: DD
bid / offre
project manager / administrateur de projets
project date / date du projet: JAN 29, 2016
project no. / no. du projet: R.071909.001
drawing no. / dessine no.: M301

04 11

0 10 20 30 40 50 60 70 80 90 100 110 120 130 140 150 160 170 180 190 200 millimetres

POINT ADDRESS	POINT NAME/FUNCTION	INPUT	OUTPUT	BINARY	ANALOG	MULTI-STATE	ALARM INDICATION	NOTES
300.BI1	Control Room Smoke Det	X		X			X	WIRE TO CONTROL ROOM SMOKE DETECTOR. REFER TO DRAWINGS FOR SMOKE DETECTOR LOCATION.
300.BI2	Control Room Emerg Stop Button	X		X			X	WIRE TO CONTROL ROOM EMERGENCY STOP BUTTON. REFER TO CONTROL TABLE CONSOLE DETAIL FOR EMERGENCY STOP BUTTON LOCATION.
300.BI3	Control Room Dispense Enable Button	X		X			X	WIRE TO CONTROL ROOM DISPENSE BUTTON. REFER TO CONTROL TABLE CONSOLE DETAIL FOR DISPENSING BUTTON LOCATION.
300.MI4	HOGEN Status	X				X	X	DB9 (RS 232) CONNECTOR AT REAR OF HOGEN. HOGEN PROVIDED BY DEPARTMENTAL REPRESENTATIVE. REFER TO DRAWINGS FOR LOCATION. REFER TO DETAIL.
300.BI5	HOGEN Fault Alarm	X		X			X	DB9 (RS 232) CONNECTOR AT REAR OF HOGEN. HOGEN PROVIDED BY DEPARTMENTAL REPRESENTATIVE. REFER TO DRAWINGS FOR LOCATION. REFER TO DETAIL.
300.MI6	HOGEN Room Flame Detector	X				X	X	WIRE TO HOGEN ROOM HONEYWELL FLAME SENSOR. REFER TO DRAWINGS FOR FLAME SENSOR LOCATION. CLASS 1 ZONE 2 GROUP IIC.
300.AI7	HOGEN Room Gas Level	X			X		X	WIRE TO HOGEN ROOM HONEYWELL GAS TRANSMITTER. REFER TO DRAWINGS FOR TRANSMITTER LOCATION. CLASS 1 ZONE 2 GROUP IIC.
300.BI8	HOGEN Rm H2 Gas Sensor Fault	X		X			X	WIRE TO HOGEN ROOM HONEYWELL GAS TRANSMITTER. REFER TO DRAWINGS FOR TRANSMITTER LOCATION. CLASS 1 ZONE 2 GROUP IIC.
300.AI9	HOGEN Rm Wall Vent Temperature	X			X		X	WIRE TO HEATED WALL VENT ASSEMBLY PROVIDED BY DEPARTMENTAL REPRESENTATIVE. REFER TO DRAWINGS FOR LOCATION. REFER TO DETAIL.
300.AI10	HOGEN EF1 Amps	X			X			WIRE TO EF-1 CURRENT SENSOR. FOR GRAPHICAL DISPLAY.
300.AI11	HOGEN EF2 Amps	X			X			WIRE TO EF-2 CURRENT SENSOR. FOR GRAPHICAL DISPLAY.
300.AI12	HOGEN Rm Fresh Air Flow	X			X		X	WIRE TO HOGEN ROOM AIRFLOW SENSOR. REFER TO DETAIL FOR AIRFLOW STATION LOCATION. CLASS 1 ZONE 2 GROUP IIC.
300.AI13	HOGEN Room Temperature	X			X		X	WIRE TO HOGEN ROOM TEMPERATURE SENSOR. REFER TO DRAWINGS FOR SENSOR LOCATION. CLASS 1 ZONE 2 GROUP IIC.
300.BI14	Inflation Room Hydrogen Flow	X		X			X	WIRE TO FLOW SWITCH ON DISPENSING VALVE ASSEMBLY PROVIDED BY DEPARTMENTAL REPRESENTATIVE. REFER TO DRAWINGS FOR LOCATION. REFER TO DETAIL.
300.AI15	Inflation Room Hydrogen Pressure	X			X			WIRE TO PRESSURE TRANSDUCER ON HYDROGEN STORAGE TANK ASSEMBLY PROVIDED BY DEPARTMENTAL REPRESENTATIVE. REFER TO DRAWINGS FOR LOCATION. REFER TO DETAIL.
300.MI16	Inflation Room Flame Detector	X				X	X	WIRE TO INFLATION ROOM HONEYWELL FLAME SENSOR. REFER TO DRAWINGS FOR FLAME SENSOR LOCATION. CLASS 1 ZONE 1 GROUP IIC.
300.AI101	Inflation Room Gas Level	X			X		X	WIRE TO INFLATION ROOM HONEYWELL GAS TRANSMITTER. REFER TO DRAWINGS FOR TRANSMITTER LOCATION. CLASS 1 ZONE 1 GROUP IIC.
300.BI102	Inflation Rm H2 Gas Sensor Fault	X		X			X	WIRE TO INFLATION ROOM HONEYWELL GAS TRANSMITTER. REFER TO DRAWINGS FOR TRANSMITTER LOCATION. CLASS 1 ZONE 1 GROUP IIC.
300.BI103	Operations Bldg Emerg Discharge Button	X		X			X	WIRE TO EMERGENCY DISCHARGE VALVE ACTUATOR ON HYDROGEN STORAGE TANK ASSEMBLY PROVIDED BY DEPARTMENTAL REPRESENTATIVE. WIRE TO EMERGENCY DISCHARGE BUTTON LOCATED ON PANEL 200 EXTERIOR IN OPERATIONS BUILDING. REFER TO DETAIL.
300.BI104	HOGEN Room Smoke Det	X		X			X	WIRE TO HOGEN ROOM SMOKE DETECTOR. REFER TO DRAWINGS FOR SMOKE DETECTOR LOCATION. CLASS 1 ZONE 2 GROUP IIC.
300.BI105	Light-Horn Test	X		X				WIRE TO TEST BUTTON LOCATED WITHIN PANEL 300 IN CONTROL ROOM.
300.AI201	Control Room Temperature	X			X		X	WIRE TO CONTROL ROOM TEMPERATURE SENSOR/THERMOSTAT. REFER TO DRAWINGS FOR SENSOR LOCATION.
300.BO1	Exterior Red Light		X	X				WIRE TO EXTERIOR RED LIGHT. REFER TO DRAWINGS FOR LOCATION. 24V LED.
300.BO2	Exterior Yellow Light		X	X				WIRE TO EXTERIOR YELLOW LIGHT. REFER TO DRAWINGS FOR LOCATION. 24V LED.
300.BO3	Exterior Green Light		X	X				WIRE TO EXTERIOR GREEN LIGHT. REFER TO DRAWINGS FOR LOCATION. 24V LED.
300.BO4	Exterior White Light		X	X				WIRE TO EXTERIOR WHITE LIGHT. REFER TO DRAWINGS FOR LOCATION. 24V LED.
300.BO5	Exterior Blue Light		X	X				WIRE TO EXTERIOR BLUE LIGHT. REFER TO DRAWINGS FOR LOCATION. 24V LED.
300.BO6	Exterior Horn		X	X				WIRE TO EXTERIOR AUDIBLE ALARM. REFER TO DRAWINGS FOR EXTERIOR ALARM LOCATION.
300.BO7	Control Room Red Light		X	X				WIRE TO CONTROL ROOM STACK LIGHT. REFER TO CONTROL TABLE DETAIL FOR STACK LIGHT LOCATION. 24V LED.
300.BO8	Control Room Yellow Light		X	X				WIRE TO CONTROL ROOM STACK LIGHT. REFER TO CONTROL TABLE DETAIL FOR STACK LIGHT LOCATION. 24V LED.
300.BO9	Control Room Green Light		X	X				WIRE TO CONTROL ROOM STACK LIGHT. REFER TO CONTROL TABLE DETAIL FOR STACK LIGHT LOCATION. 24V LED.
300.BO10	Control Room White Light		X	X				WIRE TO CONTROL ROOM STACK LIGHT. REFER TO CONTROL TABLE DETAIL FOR STACK LIGHT LOCATION. 24V LED.
300.BO11	Control Room Blue Light		X	X				WIRE TO CONTROL ROOM STACK LIGHT. REFER TO CONTROL TABLE DETAIL FOR STACK LIGHT LOCATION. 24V LED.
300.BO12	Control Room Horn		X	X				WIRE TO AUDIBLE ALARM BUILT INTO CONTROL ROOM STACK LIGHT. REFER TO CONTROL TABLE DETAIL FOR STACK LIGHT LOCATION.
300.BO13	Hydrogen Dispensing Light		X	X				WIRE TO CONTROL ROOM DISPENSE BUTTON. REFER TO CONTROL TABLE CONSOLE DETAIL FOR DISPENSING BUTTON LOCATION.
300.BO14	Control Room Heater1		X	X				WIRE TO CONTROL ROOM FORCE FLOW HEATER. REFER TO DRAWINGS FOR HEATER LOCATION.
300.BO15	Control Room Heater2		X	X				WIRE TO CONTROL ROOM FORCE FLOW HEATER. REFER TO DRAWINGS FOR HEATER LOCATION.
300.BO16	HOGEN Enable		X	X				DB9 (RS 232) CONNECTOR AT REAR OF HOGEN. HOGEN PROVIDED BY DEPARTMENTAL REPRESENTATIVE. REFER TO DRAWINGS FOR LOCATION. REFER TO DETAIL.
300.BO101	HOGEN Room Wall Vent Heater		X	X				WIRE TO HEATED WALL VENT ASSEMBLY PROVIDED BY DEPARTMENTAL REPRESENTATIVE. REFER TO DRAWINGS FOR LOCATION. REFER TO DETAIL.
300.BO102	HOGEN Room Heater1		X	X				WIRE TO HOGEN ROOM EXPLOSION PROOF HEATER. REFER TO DRAWINGS FOR HEATER LOCATION. CLASS 1 ZONE 2 GROUP IIC.
300.BO103	HOGEN Room EF1 Start/Stop		X	X				WIRE TO EF-1 FAN STARTER. FAN STARTER TO BE LOCATED IN CONTROL ROOM.
300.BO104	HOGEN Room EF2 Start/Stop		X	X				WIRE TO EF-2 FAN STARTER. FAN STARTER TO BE LOCATED IN CONTROL ROOM.
300.AO105	HOGEN Rm Mixed Air Dampers		X		X			WIRE TO HOGEN ROOM MOTORIZED DAMPER ACTUATORS. REFER TO DRAWINGS FLR LOCATION. CLASS 1 ZONE 2 GROUP IIC.
300.BO106	Hydrogen Valve1		X	X				WIRE TO MASTER DISPENSING VALVE SOLENOID ON DISPENSING VALVE ASSEMBLY PROVIDED BY DEPARTMENTAL REPRESENTATIVE. REFER TO DRAWINGS FOR LOCATION. REFER TO DETAIL.
300.BO107	Hydrogen Valve2		X	X				WIRE TO SECONDARY DISPENSING VALVE SOLENOID ON DISPENSING VALVE ASSEMBLY PROVIDED BY DEPARTMENTAL REPRESENTATIVE. REFER TO DRAWINGS FOR LOCATION. REFER TO DETAIL.
300.BO108	Control Room Heater3		X	X				WIRE TO CONTROL ROOM FORCE FLOW HEATER. REFER TO DRAWINGS FOR HEATER LOCATION.
300.BO109	HOGEN Room Heater2		X	X				WIRE TO HOGEN ROOM EXPLOSION PROOF HEATER. REFER TO DRAWINGS FOR HEATER LOCATION. CLASS 1 ZONE 2 GROUP IIC.
300.BO110	HOGEN Room Heater3		X	X				WIRE TO HOGEN ROOM EXPLOSION PROOF HEATER. REFER TO DRAWINGS FOR HEATER LOCATION. CLASS 1 ZONE 2 GROUP IIC.
200.BI1	Operations Bldg Emerg Stop Button	X		X			X	WIRE TO OPERATIONS BUILDING EMERGENCY STOP BUTTON. REFER TO OPERATIONS BUILDING DETAIL FOR EMERGENCY STOP BUTTON LOCATION.
200.BO1	Operations Bldg Red Light		X	X				WIRE TO CONTROL ROOM STACK LIGHT. REFER TO CONTROL TABLE DETAIL FOR STACK LIGHT LOCATION. 24V LED.
200.BO2	Operations Bldg Yellow Light		X	X				WIRE TO CONTROL ROOM STACK LIGHT. REFER TO CONTROL TABLE DETAIL FOR STACK LIGHT LOCATION. 24V LED.
200.BO3	Operations Bldg Green Light		X	X				WIRE TO CONTROL ROOM STACK LIGHT. REFER TO CONTROL TABLE DETAIL FOR STACK LIGHT LOCATION. 24V LED.
200.BO4	Operations Bldg White Light		X	X				WIRE TO CONTROL ROOM STACK LIGHT. REFER TO CONTROL TABLE DETAIL FOR STACK LIGHT LOCATION. 24V LED.
200.BO5	Operations Bldg Blue Light		X	X				WIRE TO CONTROL ROOM STACK LIGHT. REFER TO CONTROL TABLE DETAIL FOR STACK LIGHT LOCATION. 24V LED.
200.BO6	Operations Bldg Horn		X	X				WIRE TO AUDIBLE ALARM BUILT INTO CONTROL ROOM STACK LIGHT. REFER TO CONTROL TABLE DETAIL FOR STACK LIGHT LOCATION.

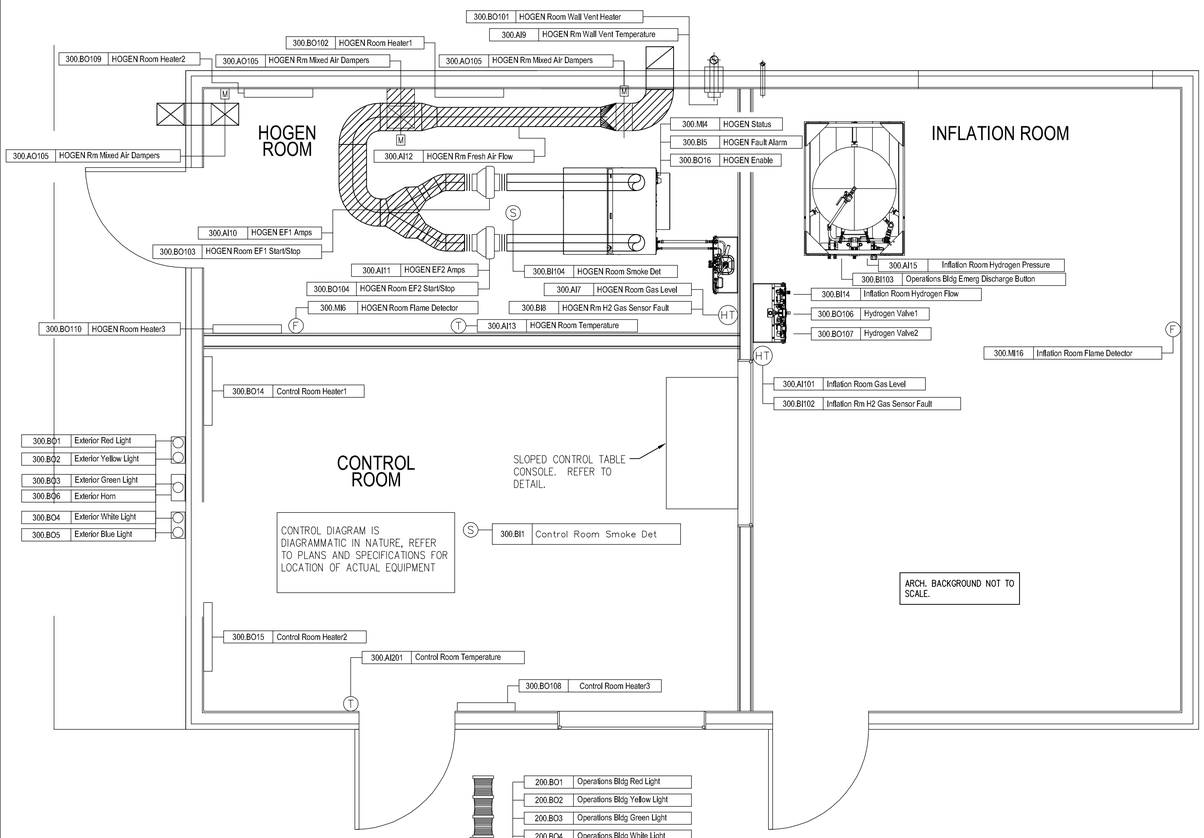

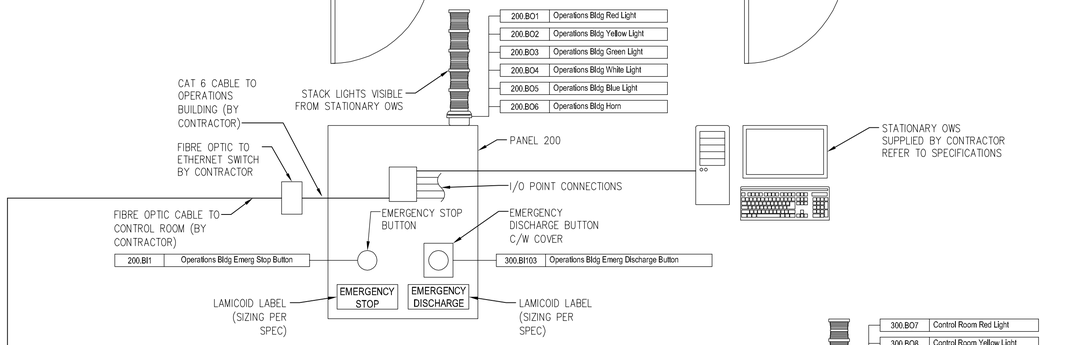

DETAIL - OPERATIONS BUILDING

N.T.S.

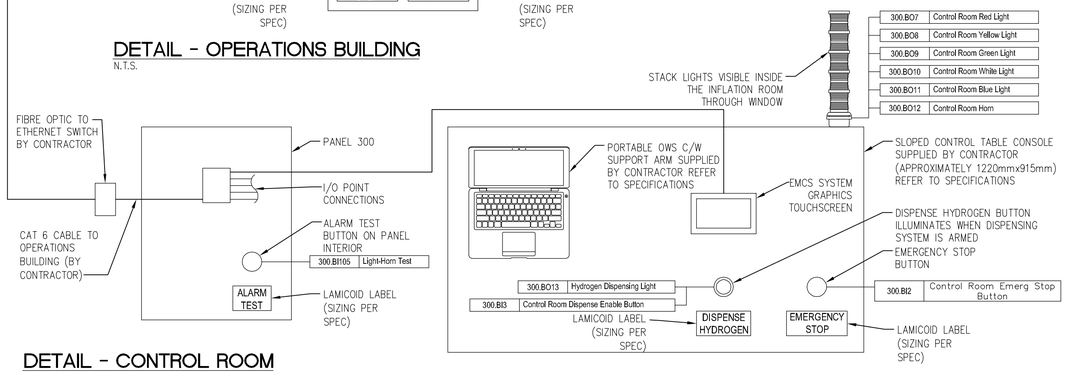

DETAIL - CONTROL ROOM

SCALE: N.T.S.

Public Works and Government Services Canada
Travaux publics et Services gouvernementaux Canada

HHAngus
HHAngus & Associates Limited Consulting Engineers
1127 Leslie Street, Toronto, ON, M3C 2J6 Canada
www.hhangus.com | T 416 443 8200 | F 416 443 8290

LICENSED PROFESSIONAL ENGINEER
D.B. DOVAS
100178914
PROVINCE OF ONTARIO

FOR BID PURPOSES AND NOT FOR CONSTRUCTION

revision		date
05	ISSUED FOR TENDER	29/01/2016
04	ISSUED FOR 99% PROGRESS SET	04/12/2015
03	ISSUED FOR 66% PROGRESS SET	30/10/2015
02	ISSUED FOR 33% PROGRESS SET	09/10/2015
01	ISSUED FOR CLASS C ESTIMATE	13/05/2015

Do not scale drawings.
Verify all dimensions and conditions on site and immediately notify the Departmental Representative of all discrepancies.

A Detail No. / No. du détail
B drawing no. – where detail required / dessin no. – où détail exigé
C drawing no. – where detailed / dessin no. – où détaillé

project title / titre du projet
EGBERT — Ontario
6248 8TH LINE, LOL 1NO

NEW HYDROGEN GENERATION (HOGEN) AND BALLOON LAUNCHING BUILDING

drawing title / titre du dessin
CONTROL SYSTEM SCHEMATIC & INPUT/OUTPUT SCHEDULE

drawn by / dessine par: HB
designed by / conc par: DD
approved by / approuve par: DD
bid / offre
project manager / administrateur de projets
project date / date du projet: JAN 29, 2016
project no. / no. du projet: R.071909.001
drawing no. / dessine no.: M400

GSC-A1 DATE PLOTTED: 2016-01-29 PLOT SCALE: 1:1 CAD FILE: HOGEN-M400-SCHEDULE