Public Works and Government Services Canada | Travaux publics et Services gouvernementaux Canada

RETURN BIDS TO:
RETOURNER LES SOUMISSIONS À:
by email: Jean-François Goyette
jean-francois.goyette
@tpsgc-pwgsc.gc.ca

SOLICITATION AMENDMENT
MODIFICATION DE L'INVITATION

The referenced document is hereby revised; unless otherwise indicated, all other terms and conditions of the Solicitation remain the same.

Ce document est par la présente révisé; sauf indication contraire, les modalités de l'invitation demeurent les mêmes.

Comments - Commentaires

Vendor/Firm Name and Address
Raison sociale et adresse du fournisseur/de l'entrepreneur

Issuing Office - Bureau de distribution
Furniture Division/Division des ameublements
11 Laurier St. / 11, rue Laurier
6B1, Place du Portage
Gatineau
Québec
K1A 0S5

Title - Sujet LOI Carling Campus	
Solicitation No. - N° de l'invitation E60PQ-160002/B	**Amendment No. - N° modif.** 001
Client Reference No. - N° de référence du client E60PQ-160002	**Date** 2016-04-07
GETS Reference No. - N° de référence de SEAG PW-$$PQ-956-70768	
File No. - N° de dossier pq956.E60PQ-160002	**CCC No./N° CCC - FMS No./N° VME**
Solicitation Closes - L'invitation prend fin **at - à 02:00 PM** **on - le 2016-04-28**	**Time Zone** **Fuseau horaire** Eastern Daylight Saving Time EDT
F.O.B. - F.A.B. **Plant-Usine:** ☐ **Destination:** ☐ **Other-Autre:** ☐	
Address Enquiries to: - Adresser toutes questions à: Goyette, J-F	**Buyer Id - Id de l'acheteur** pq956
Telephone No. - N° de téléphone (613) 219-0728 ( )	**FAX No. - N° de FAX** ( ) -
Destination - of Goods, Services, and Construction: **Destination - des biens, services et construction:** 3500 Carling Ave, Ottawa, On	

Instructions: See Herein

Instructions: Voir aux présentes

Delivery Required - Livraison exigée	**Delivery Offered - Livraison proposée**
Vendor/Firm Name and Address **Raison sociale et adresse du fournisseur/de l'entrepreneur** **Telephone No. - N° de téléphone** **Facsimile No. - N° de télécopieur**	
Name and title of person authorized to sign on behalf of Vendor/Firm (type or print) **Nom et titre de la personne autorisée à signer au nom du fournisseur/ de l'entrepreneur (taper ou écrire en caractères d'imprimerie)** **Signature**	**Date**

Canada

PART 1 - GENERAL INFORMATION

This Part does not need to be reviewed as part of the early engagement process.

PART 2 - OFFEROR INSTRUCTIONS

This Part does not need to be reviewed as part of the early engagement process.

PART 3 - OFFER PREPARATION INSTRUCTIONS

This Part does not need to be reviewed as part of the early engagement process.

PART 4 - EVALUATION PROCEDURES AND BASIS OF SELECTION

4.1 Evaluation Procedures

(a) Offers will be assessed in accordance with the entire requirement of the Request for Standing Offers including the technical and financial evaluation criteria.

(b) An evaluation team composed of representatives of Canada and Brookfield Global Integrated Solutions will evaluate the offers.

4.1.1 Technical Evaluation

4.1.1.1 Mandatory Technical Criteria

Attention Bidders: Write beside each of the criteria the relevant page number(s) from your proposal which addresses the requirement identified in the criteria.			
	Page #	**Yes**	**No**
MTSC1 The Bidder must submit one (1) plan view and one (1) 3D view of the cluster of eight (8) typical fixed workstations as specified in Annex XX. Collectively, these drawings must indicate the following information:			
• Location with dimensions of all required poles, raceways, communication knock-outs (minimum of four) and duplex electrical outlets. • Distance between back-to-back offset communications knockouts. Distance must be a minimum of four (4) inches. • Heights with dimensions of raceways 1, 2 and 3 from finished floor. • The components, their manufacturer and model, used to complete these typical configurations. All products offered must be included in XX.			

MTSC 2.1 The Bidder must submit one floor plan for the floor listed in Annex A supplied by PSPC with the Bid Package. Each floor plan must show the following, as a minimum: 1. the proposed products must meet the requirements of Annexes A. The products that must be shown include those listed below: : • All interconnecting panel systems and supported components; • all mobile pedestals; • all accessories; • all metal personal storage cabinets; • all wire management and electrical capacity of the proposed products; 3. the placement of the proposed products and the placement of the wire management and electrical capacity. The placement must correspond to the requirements of Annex A; 4. the height of the proposed panels must meet the height requirements of Annex A. MTSC 2.2 The floor plans in MTS2.1 must be submitted as an electronic format .dwg Autocad 2012 or older file. ---------- The Bidder is advised that despite Canada evaluating the above aspects of the bid, the Bidder, if awarded the resulting contract, is responsible for meeting all requirements of the contract in Part 6 herein			

M4 – The Bidder must demonstrate that the waste disposal facility has appropriate certification and agreements. To demonstrate the bidder must provide documentation outlining the following: • That their identified disposal facility retains a valid provincial Certificate of Approval for Waste Disposal issued by the Province where the facility is located • A copy of the agreement(s)/arrangement(s) in place to accept the waste components and materials from the bidder during the entire duration of the standing offer			

4.1.2 Mandatory Management Criteria

	Page #	Meets	Does not meet
MMC1- The Offeror must demonstrate that the company has successfully completed at least one project of a minimum value of $400,000.00 within the last 4 years. To demonstrate MMC1, the Offeror must provide a project summary meeting the following: -The summary should be a maximum of one page; -The project described must be for the supply, delivery and installation of workstations. -The summary must indicate the value of the project, the start and end date and a brief description. -The summary should include invoices. The Offeror must include a reference which may be contacted by Canada to validate the information provided in MMC1. The reference provided should include the following information: -Name -Title -Contact Information (valid e-mail and/or contact information)			
MMC2 - If the proposed solution includes refurbishment and/or remanufacturing, the Offeror must demonstrate that the company has successfully completed projects for a minimum total value of $250,000. To demonstrate MMC2, the Offeror must provide a summary of its completed projects. The summary should include the following: -The project(s) described must be of a total aggregate value of at least $100,000.00 which may be demonstrated with one or multiple projects. -At least one project must be valued at a minimum of $100,000. -The summary must clearly indicate that refurbishment and/or remanufacturing was included in the project(s), and that this part of the work consisted of at least %50 of the total value of the project. -The project(s) described must be for the Supply, delivery and installation of office furniture and must include refurbishment and/or remanufacturing. -The summary must indicate the value of the project(s), the start and end date and a brief description. -The summary should include invoices. The Offeror must include a reference which may be contacted by Canada to validate the information provided in MMC2. The reference provided should include the following information: -Name -Title			

-Contact Information (valid e-mail and/or contact information)			
MMC3- The Offeror must identify a Project Manager that will be responsible for supervising and completing the Work. The Offeror must provide information, through the form of a cover letter, CV, or other, demonstrating that the Project Manager has completed one or more projects meeting the following: -The project(s) must be for the supply, delivery and installation of workstations; -The project(s) described must be of a total aggregate value of at least $250,000.00 which may be demonstrated with one or multiple projects. -At least one project must be valued at a minimum of $100,000 -The Offeror must indicate the value of the project(s), the start and end date and a brief description. -The Offeror must clearly describe the role of the proposed Project Manager for each project. The Project Manager must have had a leadership role in each project. -The Project Manager may have completed the project(s) as an employee of the Offeror, or as an employee of another firm. -The Offeror should include invoices for each project. The Offeror must include a reference which may be contacted by Canada to validate the information provided in MMC3. The reference provided should include the following information: -Name -Title -Contact Information (valid e-mail and/or contact information)			

4.1.2 Financial Evaluation

4.1.2.1 Mandatory Financial Criteria

MFC 1	Offerors must complete and submit their financial offer in accordance with Annex B-1 – Basis of Payment and Annex B – 2 – Financial Evaluation. The total amount of Applicable Taxes must be shown separately.
MFC 2	To demonstrate compliance with MFC 1, the Offeror must provide Firm Unit Prices, Firm Hourly Rates and Firm % Rates for all products and services offered in Annexes B-1 and B-2
MFC 3	If Refurbished Furniture is offered, The Offeror must complete the applicable Annex B-1 Refurbished Furniture for all manufacturers for which refurbishment is offered in Annex B-2 Financial Evaluation.

4.1.2.2 *SACC Manual* Clause M0220T (2013-04-25), Evaluation of Price

4.2 Basis of Selection

4.2.1 The lowest compliant offer will be recommended for issuance of a Standing Offer.

This Part does not need to be reviewed as part of the early engagement process.

PART 5 – CERTIFICATIONS AND ADDITIONAL INFORMATION

Offerors must provide the required certifications and additional information to be issued a standing offer.

The certifications provided by Offerors to Canada are subject to verification by Canada at all times. Canada will declare an offer non-responsive, will have the right to set-aside a standing offer, or will declare a contractor in default if any certification made by the Offeror is found to be untrue whether made knowingly or unknowingly during the offer evaluation period, during the Standing Offer period, or during the contract period.

The Standing Offer Authority will have the right to ask for additional information to verify the Offeror's certifications. Failure to comply and to cooperate with any request or requirement imposed by the Standing Offer Authority will render the offer non-responsive, result in the setting aside of the Standing Offer or constitute a default under the Contract.

5.1 Certifications Required with the Offer

Offerors must submit the following duly completed certifications as part of their offer.

5.1.2 Additional Certifications Required with the Offer

This Part does not need to be reviewed as part of the early engagement process.

5.2 Certifications Precedent to the Issuance of a Standing Offer and Additional Information

The certifications and additional information listed below should be submitted with the offer, but may be submitted afterwards. If any of these required certifications or additional information is not completed and submitted as requested, the Standing Offer Authority will inform the Offeror of a time frame within which to provide the information. Failure to provide the certifications or the additional information listed below within the time frame provided will render the offer non-responsive.

5.2.3 Additional Certifications Precedent to Issuance of a Standing Offer

5.2.3.1 Status and Availability of Resources

The Offeror certifies that, should it be issued a standing offer as a result of the Request for Standing Offer, every individual proposed in its offer will be available to perform the Work resulting from a call-up against the Standing Offer as required by Canada's representatives and at the time specified in a call-up or agreed to with Canada's representatives. If for reasons beyond its control, the Offeror is unable to provide the services of an individual named in its offer, the Offeror may propose a substitute with similar qualifications and experience. The Offeror must advise the Standing Offer Authority of the reason for the substitution and provide the name, qualifications and experience of the proposed replacement. For the purposes of this clause, only the following reasons will be considered as beyond the control of the Offeror: death, sickness, maternity and parental leave, retirement, resignation, dismissal for cause or termination of an agreement for default.

If the Offeror has proposed any individual who is not an employee of the Offeror, the Offeror certifies that it has the permission from that individual to propose his/her services in relation to the Work to be performed and to submit his/her résumé to Canada. The Offeror must, upon request from the Standing Offer Authority, provide a written confirmation, signed by the individual, of the permission given to the Offeror and of his/her availability. Failure to comply with the request may result in the offer being declared non-responsive.

5.2.3.2 Capacity to Supply Remanufactured Products

This certification must be completed by Offerors who will supply Remanufactured products to complete any part of the work. Remanufactured products are defined as used products other than those supplied by Canada.
Canada will require approximately 5500 workstations as part of this Requirement. Each workstation includes panels, worksurfaces attached to the panel, one freestanding height-adjustable table, one pedestal with cushion and one wardrobe, in accordance with the specifications at Annex A.
Indicate the percentage (%) in terms of dollar value, of remanufactured products which can be supplied to complete the Work.

The Offeror certifies that ___**%** of products supplied will be remanufactured. This percentage represents the total dollar value of all products supplied to supply 5500 workstations.
If the Offeror fails to meet the % of remanufactured products identified in this certification, Canada reserves the right to implement any of the following measures:

a) Set-aside the Standing Offer;
b) Apply Vendor Performance Corrective Measures;
c) Terminate a Call-up for default;
d) Request a claim for additional cost incurred.

5.2.3.3 Forest Stewardship Council (FSC) Certification

Provide the suppliers or manufacturers FSC chain of custody certificate for all new wood based furniture products supplied.

PART 6 - SECURITY, FINANCIAL AND INSURANCE REQUIREMENTS

This Part does not need to be reviewed as part of the early engagement process.

PART 7 - STANDING OFFER AND RESULTING CONTRACT CLAUSES

A. STANDING OFFER

This Part does not need to be reviewed as part of the early engagement process.

7.4 Term of Standing Offer

7.4.1 Period of the Standing Offer

The period for making call-ups and providing services against the Standing Offer is from *(date of issuance of the Standing Offer* to *(five years after date of issuance of the Standing Offer)* inclusive.

.

7.7 Identified Users

The Identified User authorized to make call-ups against the Standing Offer is: Public Works and Government Services Canada and the Department of National Defence.

7.8 Call-up Procedures

This Part does not need to be reviewed as part of the early engagement process.

7.9 Call-up Instrument

The Work will be authorized or confirmed by the Identified User(s) using form PWGSC-TPSGC 942, Call-up against a Standing Offer.

7.10 Limitation of Call-ups

Individual call-ups against the Standing Offer must not exceed $400,000.00 (Applicable Taxes included). Call-ups exceeding this amount can be issued by the Standing Offer Authority.

7.11 Financial Limitation

The total cost to Canada resulting from call ups against the Standing Offer must not exceed the sum of $ 12,500,000.00 *(Applicable Taxes included)* unless otherwise authorized in writing by the Standing Offer Authority. The Offeror must not perform any work or services or supply any articles in response to call ups which would cause the total cost to Canada to exceed the said sum, unless an increase is so authorized.

The Offeror must notify the Standing Offer Authority as to the adequacy of this sum when 75 percent of this amount has been committed, or 4 months before the expiry date of the Standing Offer, whichever comes first. However, if at any time, the Offeror considers that the said sum may be exceeded, the Offeror must promptly notify the Standing Offer Authority.

(…)

7.13 Certifications

7.13.1 Compliance

The continuous compliance with the certifications provided by the Offeror with its offer and the ongoing cooperation in providing additional information are conditions of issuance of the Standing Offer (SO). Certifications are subject to verification by Canada during the entire period of the SO and of any resulting contract that would continue beyond the period of the SO. If the Offeror does not comply with any certification, fails to provide the additional information, or if it is determined that any certification made by the Offeror in its offer is untrue, whether made knowingly or unknowingly, Canada has the right to terminate any resulting contract for default and set aside the Standing Offer.

This Part does not need to be reviewed as part of the early engagement process.

B. RESULTING CONTRACT CLAUSES

This Part does not need to be reviewed as part of the early engagement process.

ANNEX "A-1"

STATEMENT OF WORK

The contractor must provide a solution for supplying, delivering and installing the interconnecting panel systems as described in all parts of this Annex. The proposed solution may include new, refurbished or remanufactured components, or may include any combination of these.

Annex A is also comprised of the following:

Annex A-2-a Technical Specifications - New Components
Annex A-2-b Technical Specifications – Refurbished / Remanufactured Components
Annex A-3 Typical Interconnected Panel System Layouts and 3-D's
Annex A-4 Floor Plan
Annex A-5 Furniture Delivery and Installation Schedule
Annex A-X Existing DND Assets and Lease End / Move Dates
Annex A-6 Existing Carling Campus Assets / Inventories
Annex A- 8 Power/Communications

1. Supply the Products

1.1 The Contractor, when issued Call-ups pursuant to the Standing Offer, must supply the products listed in the resulting call-up. All products must conform to the requirements of the associated bid solicitation which must be only those listed in Annex B Basis of Payment.

1.2 All products supplied must conform to the Specifications contained in Annex A-2-a Technical Specifications – New Components, and/or Annex A-2-b Technical Specifications – Refurbished / Remanufactured Components.

1.3 Throughout the process, the Contractor must assist in the Call-up preparation which includes but is not limited to, reviewing orders for correctness of components, quantities, sizes/dimensions, finishes, site verifications, etc at no additional cost to Canada.

2. Deliver the Products

2.1 The Contractor, when issued call-ups pursuant to the Standing Offer, must work with the site construction contractor to deliver the products in accordance with the delivery instructions.

3. Install the Products

3.1 The Contractor, when issued call-ups pursuant to the Standing Offer, must work with the site construction contractor to install the products in accordance with the installation instructions.

3.2 The Contractor must provide adequate manpower and staffing to work concurrently on multiple floors and/or in multiple buildings at no additional cost to Canada.

4. Site Inspection and Documentation

The Contractor, when issued Call-ups pursuant to this Standing Offer, as a minimum, must provide all of the services below for the products supplied when requirements contain floor plan(s).

4.1 The Contractor must conduct a site condition inspection for the floor(s) / area(s) that form part of the Call-up. Access to the floor(s) / area(s) must be coordinated with the Project Authority. The inspections must occur no later than the date(s) prescribed in the Call-up.

4.2 Using the information from the site condition inspection(s), and in conjunction with the Contractor's Standing Offer, by no later than five business days from the date of the inspection(s), the Contractor must prepare and deliver, to the Project Authority at no additional cost to Canada, a complete draft installation drawing for the floor(s) / area(s) inspected.

The draft installation drawing must show the following, as a minimum:

a) All furniture (including sizes and dimensions);
b) Furniture location and critical dimensions required to ensure conformance with all applicable codes, standards and regulations;
c) Interconnected panel system and room numbers;
d) Indications of powered and non-powered screens/panels;
e) Indications of power poles locations;
f) Electrical outlets;
g) Telecommunications/data symbols;
h) Lighting components requirements; and
i) Deviations from original floor plans (if any) and include rationale.

4.3 If, due to site conditions, panel cutting and work surface cutting are required, the Project Authority must be notified in writing before it is incorporated into the installation drawings.

5. Hours of Service

The Contractor must deliver the products and provide all services on the days and at the times set out in the resulting Call-up.

The definition of during Normal Business Hours and Outside Normal Business Hours are listed below.

a) During Normal Business Hours is defined as from 07:00 to 17:00 hours, Monday through Friday except Federal Government Statutory holidays.

b) During Outside Normal Business Hours is defined as:

i. between 17:00 through 07:00 hours, Monday through Friday except Federal Government Statutory holidays;

ii. all hours on Federal Government Statutory holidays;

iii. all hours on Saturdays and/or Sundays.

6. Perform Product Related Services:

6.1 Assessment of Existing furniture, including Interconnected panel systems

6.1.1. The Contractor must produce inventories including the assessment of the condition of existing product.

6.1.2. The Contractor must provide an inventory as described in this Standing Offer that must include one or more of the following:

a) Perform an assessment of the condition of existing furniture

Existing product must be inspected at various sites within the National Capital Region.

Product including interconnected panel system components, such as panels, work surfaces, and mobile pedestals shall be categorized to define the level of refurbishing required as follows:

- Limited structural integrity;
- Severely damaged;
- Require cleaning only;
- Require cleaning and limited replacement of component hardware;
- Require new finishes, i.e. re-skin panels, re-laminate work surfaces, re-paint pedestals;
- Require new finishes as stated above, with limited replacement of component hardware.

b) Perform an assessment of the condition of the existing interconnected panel electrical systems

6.1.3. The documentation associated with the services stated above must be in a readable and editable format as requested by the Project Authority and be in the official language of choice of the Project Authority. If furniture is being re-used, this information must be included in the inventories produced as part of this project.

6.2 Maintenance of Inventory and Asset Management System

The Contractor must maintain and update all inventories provided by the Project Authority and created by the Contractor for this Standing Offer for the duration of the Project.

The Contractor must release fully updated inventories to the Project Authority upon request at any point during the duration of the Standing Offer.

6.2.1. Inventory of components used for Carling Campus furniture / interconnected panel system installation.

The Contractor must provide the electronic inventory in Microsoft Excel based on the format provided by the Project Authority.

Minimum parts/component information required must be but are not restricted to the following:

a. manufacturer
b. product line
c. part number
d. part description
e. finish / colour
f. quantity on hand
g. condition
h. refurbished or new
i. quantity on order and
j. substitute parts if applicable.

6.2.2. Inventory of components identified for disposal / recycling
Minimum parts/component information required must be: quantity of interconnected panel systems by pod grouping and footprint, with typical components listing.

6.2.3. Maintain and Asset Management System

The contractor must provide an electronic version (Microsoft Excel) of their asset management system for the inventory of products. The asset management system must:

a. Maintain the inventory / all inventory components / information provided as part of this Standing Offer;
b. Have the ability to reserve components for a job;
c. Have the ability to notify the designated IU official(s) when an item reorder is needed to configure additional furniture groupings including interconnected panel systems.

6.3 Dismantling of Existing Interconnected Panel Systems

All interconnected panel systems assets identified by Canada for potential re-use or disposal are to be dismantled into their parts as required and packed / made ready for transportation.

6.4 Pick Up, Delivery and Transportation of Product

The Contractor must pick-up, load, relocate and transport existing product identified for re-use or disposal. Transportation must end at the final destination (ie Carling Campus or recycling facility).

Pick-up and delivery must be made during the times specified by the Project Authority.
All vehicles used on the site must be clearly identified, clean and meet provincial safety standards.

6.5 Warehousing / Storage

All furniture belonging to the Government of Canada must be stored in a secured facility.
The facility must be equipped with a wet sprinkler system, alarm and a temperature-controlled climate.
All products must be stored clear of the floor in a manner to prevent damage.

6.6 Refurbished Existing Furniture, Including Interconnected Panel Systems

All new furniture and components (including new components used in the refurbishing/remanufacturing process) must meet Annex A-2-a Technical Specifications – New.
All refurbished/remanufactured furniture and components must meet Annex A-2-b Technical Specifications – Refurbished / Remanufactured.

6.7 Disposal

All furniture, including interconnected panel systems and associated components, identified for disposal by the Project Authority or an authorized representative must be:

a. separated into Broken / Damaged / Unusable Items – to be broken down by the Contractor into qualifying waste streams for recycling as follows:
a. General landfill waste
b. Source separated paper fibres (cardboard, boxboard and various papers)
c. Source separated recyclables (plastic, glass, metals)
d. Other (scrap, steel, wood, printer/copier toner, confidential shredding)

b. Sent to the appropriate facility for recycling or landfill waste. The Contractor is to utilize recycling facilities whenever possible.

b. Surplus Items – may be bought back by the Contractor. If the Contractor chooses this option, the Contractor will present a buy-back proposal to the Government of Canada for review. The Government of Canada does not guarantee the proposed buy-back will be accepted. Disposal of the product not scheduled for re-use remains in contract if a buy-back for this product is not accepted.

ANNEX A – 2-a
TECHNICAL SPECIFICATIONS FOR NEW FURNITURE

1. DESCRIPTION

1.1. This specification must be read in conjunction with, and meet the latest publications and testing requirements in article 2.0 of this annex with the exemption of CAN/CGSB-44.227 Free-standing Office Desk Products and Components paragraph 6.5.3 - Usable Space and of CAN/CGSB-44.229 Interconnecting Panel Systems and Supported Components paragraph 6.6.3 - Usable Space.

2. PERFORMANCE REQUIREMENTS

2.1. All interconnecting panels and supported components must meet CAN/CGSB-44.229 with the exception of paragraph 6.6.3 – Usable Space.

2.2. All free-standing components must meet CAN/CGSB-44.227 with the exception of paragraph 6.5.3 – Usable Space.

2.3. The chemical and particle emissions of the furniture proposed must meet Section 7.6.1 of ANSI/BIFMA x7.1 when tested in accordance with ANSI/BIFMA M7.1, Standard Test Method for Determining VOC emissions for Office Furniture Systems, Components and Seating. Office furniture emission standards must be GreenGuard, SCS Indoor Advantage or other approved third-party certification programs.

2.4. Particleboard must meet ANSI A 20A5.1. If used as a substrate, particleboard must be Grade M2 or greater

2.5. Glazing
2.5.1. New safety glass: to CAN/CGSB 12.1, Type 2-tempered or ANSI Z97

2.6. Mobile pedestals, storage towers, or any other metal storage units must be tested in accordance with the applicable sections of ANSI/BIFMA X5.9-2004 or ANSI/BIFMA X5.9-2012.

2.7. All referenced publications or test methods are to be the latest issue by the closing date of the
RFSO unless otherwise indicated in the Annex.

3. TEST REQUIREMENTS

3.1. Test reports must not be more than five years old from the date the test was performed.

3.2. Revised Test Standard(s): If changes have been made to the test standard(s), retesting is required within nine (9) months of the issuance date of the revised test standard regardless of the age of testing previously performed. It is only necessary to retest the products that were revised in the new edition of the standard. As such, if test requirements did not change it is not necessary to retest products.

3.3. Product Changes – when changes are made to the products, retesting must be determined by an acceptable test facility. Any changes to the products must continue to conform to all testing requirements within this Annex.

3.4. For all test reports that are not specific to the products in the Standing Offer, the Supplier must provide an explanation to Canada as to why the "worst-case condition" applies to the products. The definition of "worst-case condition" can be found in BIFMA PD-1.

3.5. All tests must be completed by an acceptable test facility.

3.6. An Acceptable Test Facility is defined as a laboratory that is accredited by a nationally recognized body such as Standards Council of Canada, A2LA (American Association for Laboratory Accreditation) or is listed on the Canadian General Standards Board (CGSB) Laboratory Acceptance Program for the applicable scope of testing requested.

4. ENVIRONMENTAL REQUIREMENTS

4.1. All furniture must be either Greenguard or SCS Indoor Advantage-certified, or have calculated indoor air concentrations that are less than or equal to those established in Table EQ15 for furniture systems and seating determined by a procedure based on the U.S. Environmental Protection Agency's Environmental Technology Verification (ETV) Large Chamber Test Protocol for Measuring Emissions of VOC's and Aldehydes (September 1999), testing protocol conducted in an independent air quality testing laboratory.

4.2. Table EQ 15: Indoor Air Concentrations

Chemical Contaminant	Emission Limits Systems Furniture	Emission Limits Multiple Office Seating
TVOC	0.5mg/m³	0.25mg.m³
Formaldehyde	50 parts per billion	25 parts per billion
Total Aldehydes	100 parts per billion	50 parts per billion
4-PC (as an odorant)	0.0065mg/m³	0.00325mg/m³

4.3. Holes drilled into the composite wood product components at the factory must be supplied with plugs that can be removed when the holes are required for the assembly of the workstation components. Holes do not need to be plugged if the product does not emit formaldehyde resulting in an indoor air concentration of more than 50 µg/m³. (This can be achieved by product listing on Ecologo, Greenguard, etc.)

4.4. All paints must be water-based, solvent free, and applied as a powder coat.

4.5. All adhesives used in manufacturing must be Hazardous Air Pollutant (HAP) free. (Refer to Environment Canada, Canadian Environmental Protection Act 1999 Schedule 1 (CEPA 1999)

4.6. Furniture, system and component parts must not contain plastic foam that is manufactured or formulated using Chlorofluorocarbon (CFCs) or Hydrochlorofluorocarbons (HCFCs).

4.7. All furniture, systems and components must be manufactured at a facility that has an established program for solid waste auditing, has prepared a waste reduction plan and has instituted a means to track progress towards waste reduction and diversion from disposal of materials such as metals, plastics, fabrics, wood, and fiberglass.

4.8 Packaging must be minimized to that required to adequately protect the furniture from mechanical damage or soiling. No packaging may be left on site or landfilled. It must be disposed by the installer at an off-site location where it can be reused, recycled and/or recovered.

4.9 All major rigid plastic parts must be stamped with a composition code for future recycling.

Major plastic part refers to a main part of the component and is integral to the design of the component. Items considered major components are pencil trays, and base covers. Items not considered major are the work surface edges and panel end trims.

4.10. Any wood products used in any of the required furniture product must be Forest Stewardship Council (FSC) certified.

4.11. All steel parts must contain a minimum of 25% recycled content.

4.12. Any sealants or adhesives applied at the construction site must not exceed the following requirements:

4.12.1 Adhesives, Sealants and Sealant Primers: South Coast Air Quality District (SCAQMD) Rule #116A5 requirements in effect on January 1, 2003 and rule amendment dated October 3, 2003

4.12.2. Aerosol Adhesives: Green Seal Standard GS-36 requirements in effect on October 19, 2000

5. GENERAL REQUIREMENTS

5.1 General:

5.1.1. All necessary hardware attachments, trims, top caps, end caps, wall mounts, etc. that are required to ensure a complete installation must be supplied, including but not limited to, all panel-to-panel hinge connectors, all end-of-panel trim, wall mount attachments, electrical harnesses, covers for electrical/communications knock-outs, mounting cantilevers, brackets, task lights, utility poles, etc.

5.1.2 In addition to the labeling requirement stated in CAN/CGSB-44.229-200A5, all panels and components that consist of primary, secondary or dedicated surfaces must also be permanently and legibly marked with the product code and the date of manufacture or alternatively the expiry date of the warranty.

6. SUBSTITUTIONS:

Any work surface or component other than those listed in Annex B-1 - Basis of

Payment is not acceptable. No substitute will be accepted.

7. INTERCONNECTED PANEL SYSTEM

7.1. Interconnected panel system frames must have a monolithic base frame with add-on module(s).

7.2. Interconnected panel system must be comprised of the following:

7.2.1. Monolithic base frame heights of 762mm – 914mm (30” – 36”) to be finished with one interchangeable, fabric-upholstered, tackable tile on each face of Interconnected panel

7.2.2. Add-on module(s) finished with interchangeable, fabric-upholstered, tackable tiles on each face of the add-on module or frosted glazing.

7.3. Frame heights of 991mm – 116A5mm (39” – 46”) must be one of the following:

7.3.1. Monolithic base frame with one add-on module both finished with fabric tiles or;

7.3.2. Monolithic frame, only if required to achieve specified range of height, finished with
fabric tiles.

7.4. Frame heights of 1270mm – 1372mm (50” – 54”) must be comprised of a monolithic base frame as per 7.2.1 and minimum two (2) add-on modules.

7.5. Frame heights of 1524mm – 1676mm (60”-66”) must be comprised of a monolithic base frame as per 7.2.1 and minimum three (3) add-on modules.

7.6. Refer to Component Listing, Annex XXX for required interconnected panel system widths and heights.

7.7. Interconnected panel system must be complete with integrated wire and cable management and electrical capacity, Refer to Annex A-8

7.7.1. Each workstation must be provided with vertical and horizontal cable management systems to conceal any external cables. Refer to Annex A- 8 Power/Communications for additional information on cable/wire management.

7.8 The interior (core) of each interconnected panel must be open with the exception of metal horizontal framing. Framing members are required to accommodate both horizontal and vertical separation between raceways – refer to Annex XXX

7.9. Interconnected panel system frames must be constructed of cold rolled steel or extruded aluminum which has a recycled content greater than 10%.

7.10. When base raceways exist on interconnected panel system, base must be covered and concealed in a finish to match interconnected panel system frame finish.

7.11. All fabric tiles must be constructed in such a manner as to maintain tile shape when removed from interconnected panel system frame and/or be capable of being repositioned in the frame with no sagging or loss of tensile strength.

7.12. Framed glazing add-on modules must be single glazed symmetric with frosted standard glass or frosted acrylic. The glazing add-on frame must match frame of base panel.

7.13. Interconnected panel tiles must be field-interchangeable to allow any tile within an interconnected panel configuration to be removed.

7.14. Interconnected panels must have the ability to provide a variation of upholstered tiles (same grade of fabric) on each side of Interconnected panel and/or on same side of Interconnected panel.

7.15. Interconnected panel system thickness: Thickness must be no greater than 102mm (4”).

7.16. All critical aisle inside clear dimensions indicated on plans must be met.

7.17. Filler interconnected panel must be available for gaps between an interconnected panel and any column or wall larger than 76mm (3”) and less than the smallest standard interconnected panel system width available.

7.17.1. Filler panel must be consistent with appearance of adjacent interconnected panels.

7.17.2. Filler panels are not required to be ‘powered’.

7.18. Interconnected panel system trim: Unless interconnected panel system top finish, ends and corner linking devices are integrated in the interconnected panel system design, the interconnected panel system must provide low profile and smooth metal top caps no greater than 10mm (3/8”) in projection, interconnected panel system end trims no greater than 10mm (3/8”) projection and corner posts that can be attached to the interconnected panel system without visible connecting devices in order to provide a uniform appearance.

7.19. All exposed interconnected panel system ends at the "+", "L" and "T" connections must be finished with a compatible filler piece.

8. SUPPORTED COMPONENTS AND PANEL-HUNG WORK SURFACES

8.1. Work surfaces must be available in various widths and depths as listed in Annex XXX Component Listing

8.2. Work surfaces must have a wire way cut out(s) or a 13mm – 25mm (½” - 1”) full width gap between back edge of work surface and interconnected panel system to allow cords to pass to the underside of the work surface.

8.2.1. If wire way cut out(s) are provided, work surfaces 1524mm (60”) and greater to have two (2) wire way cut outs.

8.3. All work surfaces must be able to accept installation of mounting hardware and attachments, have horizontal wire management across the entire width at underside of surface. Wire management trays, rings or clips are acceptable.

8.4. Work surfaces must be installed level and at a determined height interval with adjacent work surfaces in a secure and stable manner.

8.5. Work surfaces must be capable of being mounted on interconnected panel system by use of cantilevers and support legs. All work surfaces are to be predrilled to accept installation of support hardware and attachments. Where two panel-hung work surfaces meet, a separate cantilever must support each of the individual work surface edges. All cantilevered work surfaces must be installed level and flush with adjacent work surfaces.

8.6. Work Surface Support Legs: These supports must be provided for panel-hung work surfaces whenever a return interconnected panel is not present. Support legs must be C-leg, H-leg, T-leg or post-leg.

8.6.1.Work surface support legs must be height adjustable ranging from 660mm (26”) to 813mm (32”) adjustable in 25mm (1”) increments

8.7. Minimum work surface thickness must be 25mm (1”)

8.8. Transaction work surfaces must be securely mounted as add-ons to the interconnected panel system.

9. FREE-STANDING HEIGHT-ADJUSTABLE (HA) WORK SURFACES

9.1. Free-standing HA work surfaces must have crank, torsion or counter-balance height adjustment mechanism. Mechanism must allow for continuous adjustability throughout the range of height. Height-adjustment control to be located in easily accessible yet unobtrusive location.

9.2. Underside of free-standing HA work surfaces must have clear area for installation of keyboard tray or a keyboard mounting kit must be provided.

9.3. Minimum free-standing HA work surface thickness must be 25mm (1”)

9.4. Free-standing HA work surfaces 1219mm (48”) and greater must have two (2) wire way cut outs or grommets, or a 13mm – 25mm (½” - 1”) full width gap between back edge of free-standing HA work surface and interconnected panel system to allow cords to pass to the underside of the free-standing HA work surfaces.

9.5. All free-standing HA work surfaces must have horizontal wire management across the entire width at underside of surface.

9.6. All support component finishes must match the frame finish selected for the interconnected panel system.

9.7. Free-standing HA work surface support legs must be C-leg, T-Leg or H-leg. Support legs must not unduly encroach on or impede on knee-space and ability to move from adjacent work surface to adjacent work surface. Support legs must be constructed of metal and available in a variety of painted finishes.

9.A5. Free-standing HA work surface must have sit-stand height adjustability range of at least 79mm - 940mm (27”– 41”).

9.9. Free-standing HA work surfaces height adjustable must be available in a variety of widths, Refer to 'Component Listing' in Annex 'C' for sizes.

9.9. All free-standing HA work surfaces when installed must fit within the inside finished clear dimensions of the interconnected panel system when they are enclosed by the interconnected panel system within a workstation footprint.

10. STORAGE

10.1. All storage within a single workstation must be metal, available in the identical finishes and/or complimentary finishes and must provide a uniform appearance in quality, style, material, finish and workmanship.

10.1.1. **Locks:**

10.1.1.1. All drawers and doors must be lockable.

10.1.1.2. Two (2) keys must be provided for each storage unit within a workstation.

10.1.1.3. The minimum number of key combinations must be 100.

10.1.1.4. A total of three (3) master keys must be provided to the client.

10.1.1.5. All storage within a workstation must be keyed-alike.

10.1.1.6. Locks or cylinders must be designed to allow for easy installation or replacement in the field and have a corrosion resistant finish

10.1.2. **Drawers**:

10.1.2.1. All drawers must be metal with metal face panels.

10.1.2.2. Drawers must be self-latching, enclosed in one body unit.

10.1.2.3. Width of drawers must be 381mm - 457mm (15" - 18")

10.1.3. **Doors**:

10.1.3.1. All storage unit doors must be painted metal finish.

10.1.3.2. All swing cabinet doors must be capable of opening a minimum of 90 degrees.

10.1.3.3. Resilient bumpers must be provided on all door assemblies to minimize impact noise when doors close.

10.2. **Metal Mobile Pedestals with Upholstered Seat Cushion:**

10.2.1. Box/file (B/F) complete with removable pencil tray

10.2.2. Must have carpet casters for carpeted flooring.

10.2.3. Must have smooth surfaces and be covered entirely in a consistent, dust-free paint finish.

10.2.4. Must have radius edges on all corners including the drawers. There must not be any pointed edges, which may cause a safety hazard.

10.2.5. Must have an integrated upholstered seat cushion

10.2.6. Must fit underneath the work surface mounted at standard height of 737mm (29") above finished floor.

10.2.7. Must be no less than 381mm (15") wide and no greater than 457mm (18") wide.

10.2.A5. Must be no deeper than 610mm (24") and not project past the front edge of a 610mm (24") deep work surface.

10.3. **Metal Mobile Pedestals without Upholstered Seat Cushion:**

10.3.1. Box/File (B/F)configuration

10.3.2. Must have carpet casters for carpeted flooring.

10.3.3. Must have smooth surfaces and be covered entirely in a consistent, dust-free paint finish.

10.3.4. Must have radius edges on all corners including the drawers. There must not be any pointed edges, which may cause a safety hazard.

10.3.5. Must fit underneath the work surface mounted at standard height of 737mm (29")above finished floor.

10.3.6. Must be no less than 381mm (15") wide and no greater than 457mm (18") wide.

10.3.7. Must be no deeper than 610mm (24") and not project past the front edge of a 610mm (24") deep work surface.

10.3.A5. Must come complete with a finished top.

10.4. **Metal Storage Towers:**

10.4.1. Footprint size to be 5A54mm - 610mm x 5A54mm - 610mm (23"-24" x 23" 24")

10.4.2. The following configuration must be available in 1270mm – 1372mm (50"-54") height for workstations and 1575mm – 1676mm (62"-66") height for enclosed offices

10.4.2.1.Full-height valet/coat compartment with hanging rod or hooks, 152mm – 229mm (6" -9")

10.4.2.2.Two file drawers below and hinged door compartment with adjustable shelf above, adjacent to valet/coat compartment

10.4.3. Must be available in 'left' and 'right'- handed configurations

10.4.4. Must have smooth surfaces and be covered entirely including the top in a consistent, dust-free paint finish.

10.4.5. Must have radius edges on all corners including the drawers. There must not be any pointed edges, which may cause a safety hazard.

11. ACCESSORIES

11.1. **Accessory Rail:**

11.1.1. Accessory rail must be installed over-top of a fabric tile. Width of the rail must correspond with interconnected panel width. Refer to Annex B-1 - Basis of Payment for sizes.

11.1.2. Accessory rail must be securely mounted on the interconnected panel mounting system ensuring that there is no damage to interconnected panel system or work surface.

11.1.3. Must be able to accommodate a minimum of three (3) accessories. Allow for a selection of three (3) different paper management accessories from a minimum of five (5) options.

11.1.4. Accessory rail finish to be painted metal to match interconnected panel system trim.

11.2. **Coat Hooks:**

11.2.1. Coat hooks will be provided only where required and are not to be included for each workstation.

11.2.2. Coat hooks to be installed at top of interconnected panel system frame without hardware or causing damage to interconnected panel system finishes.

11.2.3. Coat hook must not exceed a horizontal projection of 38mm (1 ½").

11.3. **Articulating Keyboard and Mouse Support Surface:**

11.3.1. The keyboard and mouse support surface must be attached to the underside of Free-Standing Height Adjustable Work surfaces (Section 9) and be capable of being height adjusted by the user with or without the use of a lever, to any position within a minimum range of 279mm (11") allowing 117mm (5") below and 152mm (6") above the monitor support surface.

11.3.2. Once the keyboard and mouse support surface has been locked in the desired position, the surface must remain stable during normal use.

11.3.3. The keyboard and mouse support surface must have the ability to slide under the work surface when not in use.

11.3.4. The keyboard and mouse support surface must be equipped with a

wrist rest featuring a gel-based cushion.

11.3.5. The keyboard and mouse support surface must accommodate ergonomic-style keyboards.

11.3.6. The keyboard and mouse support surface must be equipped with an integrated area for mouse, minimum 200 x 200mm (A5" x A5") directly on the keyboard support surface, at the right and left of the keyboard tray.

11.3.7. The keyboard and mouse support surfaces must be capable of having a rearward tilt of at least -15º and a forward tilt of at least +/--10º; and a horizontal rotation of +/-30º.

11.3.8. The keyboard and mouse support surface must have both a non-slip surface and a lip along the back edge of this surface in order to prevent the keyboard or the mouse from falling off the support surface.

11.4. **Task Light Fixtures**

11.4.1. Freestanding desk LED task light must include:

11.4.1.1. A height adjustable stem

11.4.1.2. Pivoting light head both horizontally and vertically

11.4.1.3. A minimum lamp life of 35,000 hours

12. FINISHES

12.1. **Fabrics**

12.1.1. Fabrics must contain a minimum recycled content of 40% polyester or other environmentally appropriate material.

12.1.2. Fabrics must have a minimum weight of 10oz. per linear yard.

12.1.3. Fabric Selection must include:

12.1.3.1. A minimum of nine (9) fabric card options with six (6) patterned and three (3) solids for interconnecting panel system tile fabrics.

12.1.3.2. A minimum of six (6) fabric card options with three (3) patterned and three (3) solids for mobile pedestal cushioned seat upholstery.

12.2. **Work Surfaces:**

12.2.1. All work surfaces must be finished with high-pressure laminate.

12.2.2. Finishes selection for panel-hung and free-standing work surfaces must match. Must include a minimum selection of ten (10) standard horizontal finishes such as but not limited to solids, patterns and wood grains.

12.2.3. The submission must include a minimum of five (5) different polymer edge trim colours.

12.3. **All Other Surfaces:**

12.3.1. Finishes selection for storage towers must match and mobile pedestals must match or coordinate.

ANNEX A-2-b
TECHNICAL SPECIFICATION – REFURBISHED / REMANUFACTURED COMPONENTS

1. DESCRIPTION

1.1. This specification details the technical requirements, which apply to refurbished and / or remanufactured product.

2. PERFORMANCE REQUIREMENTS

2.1. The chemical and particle emissions of any new materials included in the refurbishment / remanufacturing process of the furniture proposed must meet Section 7.6.1 of ANSI/BIFMA x7.1-2007 when tested in accordance with ANSI/BIFMA M7.1-2007, Standard Test Method for Determining VOC emissions for Office Furniture Systems, Components and Seating. Office furniture emission standards must be GreenGuard, SCS Indoor Advantage or other approved third-party certification programs.

2.2. New particleboard must meet ANSI A 20A5.1. If used as a substrate, particleboard must be Grade M2 or greater.

2.4. New Fabrics
The fabric must meet the ACT Voluntary Performance Guidelines for Wrapped Panels and Upholstered Walls.

2.5. Drawer Slides, Casters and Lock Mechanisms
Replacement drawer slides, casters and lock mechanisms must meet the applicable acceptance levels, when tested in accordance with the appropriate sections of ANSI/BIFMA X5.9 – Storage Units – Tests.

2.6. All referenced publications or test methods are to be the latest issue by the closing date of the RFSO unless otherwise indicated.

3. TEST REQUIREMENTS

3.1. Test reports must not be more than five years old from the date the test was performed.

3.2. Revised Test Standard(s): If changes have been made to the test standard(s), retesting is required within nine (9) months of the issuance date of the revised test standard regardless of the age of testing previously performed. It is only necessary to retest the products that were revised in the new edition of the standard. As such, if test requirements did not change it is not necessary to retest products.

3.3. Product Changes – when changes are made to the products, retesting must be determined by an acceptable test facility. Any changes to the products must continue to conform to all testing requirements within this Annex.

3.4. For all test reports that are not specific to the products in the Standing Offer, the Supplier must provide an explanation to Canada as to why the "worst-case condition" applies to the products. The definition of "worst-case condition" can be found in BIFMA PD-1.

3.5. All tests must be completed by an acceptable test facility.

3.6. An Acceptable Test Facility is defined as a laboratory that is accredited by a nationally recognized body such as Standards Council of Canada, A2LA (American Association for Laboratory Accreditation) or is listed on the Canadian General Standards Board (CGSB) Laboratory Acceptance Program for the applicable scope of testing requested.

4. ENVIRONMENTAL REQUIREMENTS

4.1. Holes drilled into the composite wood product components that are no longer being used (ie from former keyboard tray installation, former furniture bracket installation) are to be filled.

4.2. Paints applied must be water-based, solvent free, and applied as a powder coat. Interior paints applied on-site must meet the limitations and restrictions concerning chemical components set by the following standards:

- 4.2.1. Topcoat Paints: Green Seal Standard GS-11, Paints, January 1997.
- 4.2.2. Anti-Corrosive and Anti-Rust Paints: Green Seal Standard GC-03, anti-Corrosive Paints, Second Edition, January 7, 1997 For Applications on Ferrous Metal Substrates.
- 4.2.3. All other Architectural Coatings, Primers and Undercoats: South Coast Air Quality Management District (SCAQMD) Rule #1113, Architectural Coatings, rules in effect on January 1, 2004.

4.3. Adhesives must be Hazardous Air Pollutant (HAP) free. (Refer to Environment Canada, Canadian Environmental Protection Act 1999 Schedule 1 (CEPA 1999)

4.4. New furniture, system and component parts must not contain plastic foam that is manufactured or formulated using Chlorofluorocarbon (CFCs) or Hydrochlorofluorocarbons (HCFCs).

- 4.4.1. All systems furniture and seating furniture that has been manufactured, refurbished or refinished within one year prior to occupancy must be either Greenguard or SCS Indoor Advantage-certified, or have calculated indoor air concentrations that are less than or equal to those established in Table EQ15 for furniture systems and seating determined by a procedure based on the U.S. Environmental Protection Agency's Environmental Technology Verification (ETV) Large Chamber Test Protocol for Measuring Emissions of VOC's and Aldehydes (September 1999), testing protocol conducted in an independent air quality testing laboratory. Calculated indoor are concentrations that are less than or equal to those in Table EQ15 for furniture systems and seating may be determined by a procedure based on BIFMA M7.1-2005 and X7.1-2005 testing protocol conducted in an independent third party air quality testing laboratory.

Table EQ 15: Indoor Air Concentrations

Chemical Contaminant	Emission Limits Systems Furniture	Emission Limits Multiple Office Seating
TVOC	0.5mg/m³	0.25mg.m³
Formaldehyde	50 parts per billion	25 parts per billion
Total Aldehydes	100 parts per billion	50 parts per billion
4-PC (as an odorant)	0.0065mg/m³	0.00325mg/m³

4.5. All refurbishing / remanufacturing must be done at a facility that has an established program for solid waste auditing, has prepared a waste reduction plan and has instituted a means to track progress towards waste reduction and diversion from disposal of materials such as metals, plastics, fabrics, wood, and fiberglass.

4.6. Packaging must be minimized to that required to adequately protect the furniture from mechanical damage or soiling. No packaging may be left on site or landfilled. It must be disposed by the installer at an off-site location where it can be reused, recycled and/or recovered.

4.7. All new major rigid plastic parts must be stamped with a composition code for future recycling.

4.7.1. Major plastic part refers to a main part of the component and is integral to the design of the component. Items considered major components are pencil trays, and base covers. Items not considered major are the work surface edges and panel end trims.

4.8. Any new wood products or components must be Forest Stewardship Council (FSC) certified. Provide the vendor's or manufacturer's Forest Stewardship Council chain-of-custody (COC) certificate number for all wood-based furniture product.

4.9. New Steel parts must contain a minimum of 25% recycled content.

4.10. Any sealants or adhesives applied at the construction site must not exceed the following requirements:

4.10.1 Adhesives, Sealants and Sealant Primers: South Coast Air Quality District (SCAQMD) Rule #116A5 requirements in effect on January 1, 2003 and rule amendment dated October 3, 2003

4.10.2. Aerosol Adhesives: Green Seal Standard GS-36 requirements in effect on October 19, 2000

5. GENERAL REQUIREMENTS

5.1 General:

5.1.1. Necessary hardware attachments, trims, top caps, end caps, wall mounts, etc. that are required to ensure a complete installation must be supplied, including but not limited to, all panel-to-panel hinge connectors, all end-of-panel trim, wall mount attachments, electrical harnesses, covers for electrical/communications knock-outs, mounting cantilevers, brackets, task lights, utility poles, etc.

5.1.2. Refurbished / remanufactured panels and components that consist of primary, secondary or dedicated surfaces must be permanently and legibly marked with the product code and the date of manufacture and the expiry date of the warranty.

6. CLEANING

6.1 Cleaning of original panel fabric.

6.1.1 Fabric panels must be vacuumed and/or cleaned with products that

6.1.2. have a Global Eco-labelling Network (GEN) approved eco-label or equivalent that confirms both the environmental features and the performance of the product.

6.1.3. Acoustic backing must be kept dry during cleaning process.

6.2. Cleaning of metal and plastic parts / components / accessories.

6.2.1. All exposed metal and plastic will be cleaned to remove dirt, scuff marks, blemishes etc., accumulated during service.

6.3. Worksurface cleaning

6.3.1. All work surfaces must be cleaned to remove dirt, blemishes etc. accumulated during service.

6.4.. Storage cleaning

6.4.1. All pedestals (including upholstered seat cushions as applicable) must be cleaned inside and outside to remove dirt, blemishes etc.

7. REFURBISHING

7.1 Panel refurbishing

7.1.1. All refurbished panels, powered and non-powered, must maintain cable pathways which are capable of accommodating the electrical, voice and data cables and are an integral part of the panel.

7.2. Repair / painting of metal parts.

7.2.1. All metal parts, such as side rails, connectors, base plates etc., requiring painting must be removed from the panel. Leveling glides are to be verified if functional and repaired.

7.2.2. All worn, dysfunctional or missing moving parts must be replaced.

7.2.3. Metal parts requiring surface refinishing must be sanded, cleaned and finished using low VOC content or non-toxic surface coatings.

7.2.4. Levelling glides are to be verified if functional and repaired if necessary.

7.2.5. There must be no tool, machine or cross sanding marks.

7.2.6. All unused knock-outs and/or access points which are visible on refurbished panels must be covered with the appropriate service part to prevent unsightly holes.

7.3. Removal / replacement of original panel fabric and or elements.

7.3.1. The original fabric must be removed from the panel when the fabric will be re-used and panel resizing is required.

7.3.2. All fabric must be mounted squarely to the panel frame, pulled taut to ensure no sagging and secured in accordance with the OEM's installation instructions.

7.3.3. Refurbished panels must not show any visible threads.

7.4.. Worksurface refurbishing

7.4.1. All refurbished work surfaces must be cut according to requirements, re-laminated or repaired if any damage occurs during refurbishment and new trim applied.

7.4.2. When a surface must be re-laminated, the resultant work surface must be a balanced construction to resist warping and the underside must be smoothly finished

7.5. Free-standing height-adjustable work surfaces not supplied by the existing inventory must be created by applying new height adjustable bases to existing 48" wide x 24" deep surfaces.

7.6. Refurbished / remanufactured storage within a single workstation must be metal.

7.7 Locks or locking devices must be re-cored or rekeyed as applicable. A master key must be provided for all key lock combinations.

7.7.1. The minimum number of key combinations must be 100.

7.7.2. A total of three (3) master keys must be provided to the client.

7.8. Worn / damaged seat cushion fabric must be removed and the cushion re-upholstered.

8. PANEL CUTTING

8.1. Panels must be cut as required

8.2. Cut panels must be finished to OEM standard.

8.3 Cut panels must be compatible with new panels and associated components from the same manufacturer and product line.

10. ACCESSORIES

10.1. All accessories must match the interconnected panel system.

10.2. Accessory Panel / Rail

10.2.1. Width of the accessory panel / rail must correspond with interconnected panel width.

10.2.2. Accessory rail includes the panel mounted rail assembly and associated accessories.

10.2.3. Accessory rail must be able to accommodate a minimum of three (3) accessories. Allow for a selection of three (3) different paper management accessories from a minimum of five (5) options.

11. FINISHES

11.1 All finishes within an interconnected panel system must match or coordinate.

11.2 Finishes for interconnected panel system layouts must match or coordinate with one another.

11.3. Fabrics

11.3.1. Fabrics must contain a minimum recycled content of 40% polyester or other environmentally appropriate material.

11.3.2. Fabrics must have a minimum weight of 10oz. per linear yard.

11.3.3. Fabric Selection must include:

11.1.3.1. A minimum of nine (9) fabric card options with six (6) patterned and three (3) solids for interconnecting panel system tile fabrics.

11.1.3.2. A minimum of six (6) fabric card options with three (3) patterned and three (3) solids for mobile pedestal cushioned seat upholstery.

11.4. Work Surfaces:

11.4.1. All work surfaces must be finished with high-pressure laminate.

11.4.2. Finishes selection for panel-hung and free-standing work surfaces must match. Must include a minimum selection of ten (10) standard horizontal finishes such as but not limited to solids, patterns and wood grains.

11.4.3. The submission must include a minimum of five (5) different polymer edge trim colours.

11.5. All Other Surfaces:

11.5.1. Finishes selection for storage towers and mobile pedestals must match or coordinate.

11.5.2. Must include a minimum selection of ten (10) standard metal finishes.

12. WARRANTEE

12.1. Work stations where the extent of refurbishment is cleaning shall have a lifetime equivalent to the balance of the remaining OEM warrantee or at least five (5) years in daily use in an office environment, whichever is greater, from the day of delivery and acceptance by the Project Authority.

12.2. The refurbished / remanufactured work stations shall have a lifetime of at least five (5) years in daily use in an office environment, from the day of delivery and acceptance by the Project Authority.

ANNEX "B-1 a, b, and c"

BASIS OF PAYMENT

(*see attached*)

ANNEX B-2

FINANCIAL EVALUATION

(see attached)

Annex B – 3
Financial Evaluation Scenario (Part 1 of 2)

Evaluation Scenario
The following fictional scenario is used to evaluate the financial proposals of the Offerors. It is not an actual order but it is built in a way that is representative of reality.
The Offeror must supply and install the workstations on one floor in accordance with the Floorplans at Annex A-4. In order to fulfill the requirement, the Offeror can provide new product or remanufactured product. Alternatively, the Offeror can use the client's existing used furniture, which includes Teknion TOS and Leverage systems and Herman Miller Ethospace systems. Any existing furniture used to complete any part of the Work must be dismantled on-site, refurbished, delivered to Carling Campus and installed. Any existing furniture not used to complete any part of the Work must be disposed by the Offeror. Disposal will be audited by Canada. Product Related Services are also required by the client.

New Furniture
Any new furniture offered must meet the Specifications for New Furniture detailed in Annex A-2-a.

Remanufactured Furniture
Any remanufactured furniture offered must meet the Specifications for Remanufactured Furniture detailed in Annex A-2-b. If the Offeror decides to offer Remanufactured Furniture, the Offeror must complete the Capacity to Supply Remanufactured Products Certification at Part 5 – Certifications. The Offeror cannot offer a higher % of remanufactured product (in terms of total $ value of all products) than what is indicated in the certification at Part 5.

Refurbished Furniture
The Offeror can refurbish and reuse existing products belonging to the Client. A list of existing products is found at the Financial Evaluation Scenario – Part 2 of 2 – Existing Product.

Combination of different types of furniture
The Offeror can provide a combination of different types of furniture as described above.

Disposal (cost per component)
The Offeror must dispose of all products that will not be refurbished by the Offeror to complete the Work. The products are identified at the Financial Evaluation Scenario – Part 2 of 2 – Existing Product. Disposal must meet the Requirements for Disposal described at Annex Z (N/A).

Storage (price per cubic feet per month) and Transportation.
Because of an expiring lease, the Offeror may have to store products in order to complete the Work.

Product Related Services
The Offeror must perform the following Product Related Services, regardless of the proposed solution:

1. Perform 5 person-hours of inspection & inventory services during normal working hours.
2. Perform 5 person-hours of inspection & inventory services after normal working hours.
3. Perform 10 person-hours of dismantling services.

These services must be performed in accordance with section 6 of the SOW.

Financial Evaluation Scenario – Part 2 of 2 - Existing Products

Existing products can be refurbished and reused in part or in their entirety. There are not enough existing products to complete the entire floorplan. Any product that will not be reused to complete the Work must be disposed of by the Contractor. The Cost of dismantling and disposal must be included in the financial proposal as applicable.

In order to complete the floorplan, the Offeror can choose amongst the following solutions:

Solution 1: all new workstations (189 new) - dispose of 151 workstations, estimated at 6,870.5 cubic feet (equivalent of 80% of total number of workstations)

Solution 2: a maximum of 80% refurbished workstations (50% TOS, 20% Ethos, 10% Lev) and 20% new workstations (94 TOS, 38 Ethos, 19 Lev, 38 new) - no disposal

Solution 3: using some but not all of the workstations available for refurbishment as follows:

3.1. Supply a maximum of 70% refurbished using 50% TOS and 20% Ethos (94 TOS, 38 Ethos, 57 new) - dispose of 19 workstations, estimated at 864.5 cubic feet (equivalent of 10% of total number of workstations)

3.2. Supply a maximum of 60% refurbished using 50% TOS and 10% Lev (94 TOS, 19 Lev, 76 new) - dispose of 39 workstations, estimated at 1,774.5 cubic feet (equivalent of 20% of total number of workstations)

3.3. Supply a maximum of 50% refurbished using 50% TOS (94 TOS, 95 new)) - dispose of 57 workstations, estimated at 2,593.5 cubic feet (equivalent of 30% of total number of workstations)

3.4. Supply a maximum of 30% refurbished using 20% Ethos & 10% Lev (38 Ethos, 19 Lev, 132 new) - dispose of 95 workstations, estimated at 4,322.5 cubic feet (equivalent of 50% of total number of workstations)

3.5. Supply a maximum of 20% refurbished using 20% Ethos (38 Ethos, 151 new) - dispose of 113 workstations, estimated at 5,141.5 cubic feet (equivalent of 60% of total number of workstations)

3.6. Supply a maximum of10% refurbished using 10% Lev (19 Lev, 170 new) - dispose of 132 workstations, estimated at 6,006 cubic feet (equivalent of 70% of total number of workstations)

Solution 4: using remanufactured components - all workstations supplied may be remanufactured workstations, or any of the percentages above may be replaced with remanufactured furniture - dispose of up to 151 workstations, estimated at 6,870.5 cubic feet (equivalent of 80% of total number of workstations)

Annex A-3

Typical Workstations Layouts and 3-D Views

Typicals are provided for information purposes only. Other workstation layouts will exist due to various factors on building floorplates.

WORKSTATION COMPONENT LEGEND			
A1	610mm D x 1220mm W (24" x 48"), free-standing, height-adjustable (HA) work surface	E	Articulating Keyboard and Mouse Support Surface
B1	610mm D x 1829mm W (24" x 72"), free-standing, height-adjustable (HA) work surface	F1	610mm (24") Accessory Rail
B2	610mm D x 1220mm W (24" x 48"), panel-hung work surface	F2	1220mm (48") Accessory Rail
C	Drawer Pedestal	H2	914mm Ø (36") Mobile Table N.I.C.
D	Storage Tower	J	Systems Furniture Coat Hook
	Interconnecting panel with two (2) quadraplex data outlets and two (2) duplex electrical outlets		Interconnecting panel with one (1) duplex electrical outlet
	Interconnecting panel with three raceways – no data or duplex outlets		Indicates panel shared with adjacent workstation for privacy

FREE WORKSTATION 1.5m²	
3-D View	Plan View
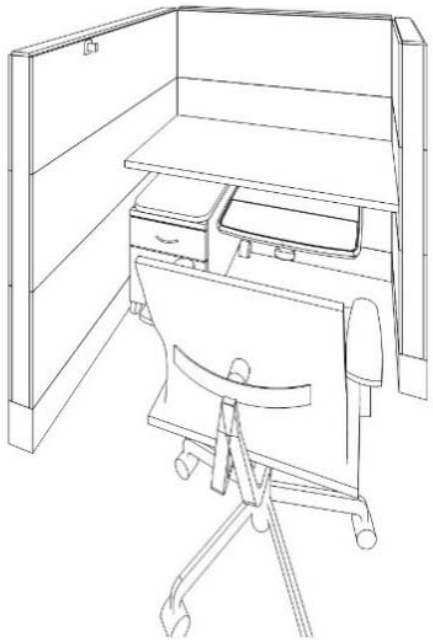	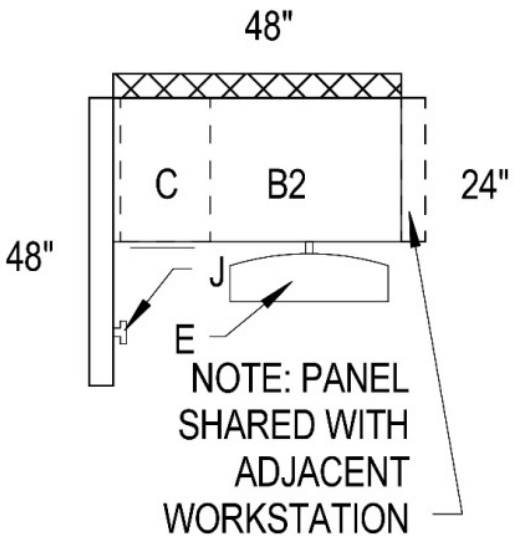

FLEX WORKSTATION 3.0m²

3-D View	Plan View
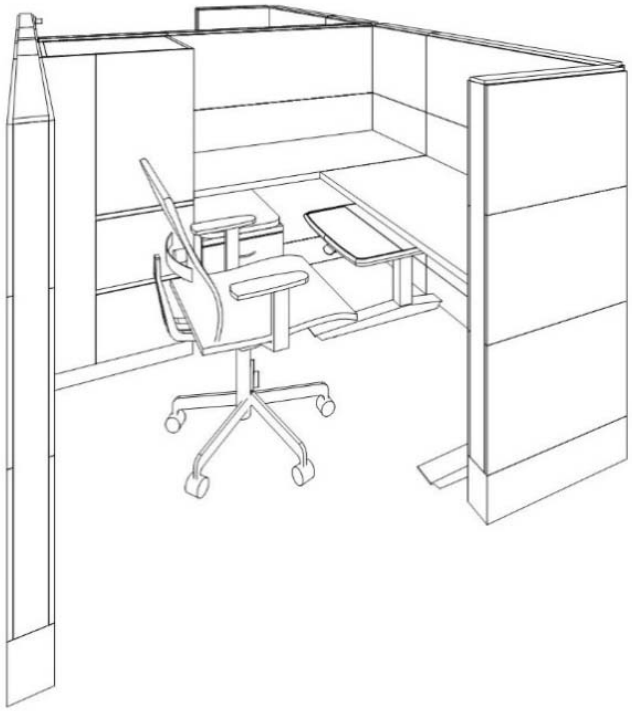	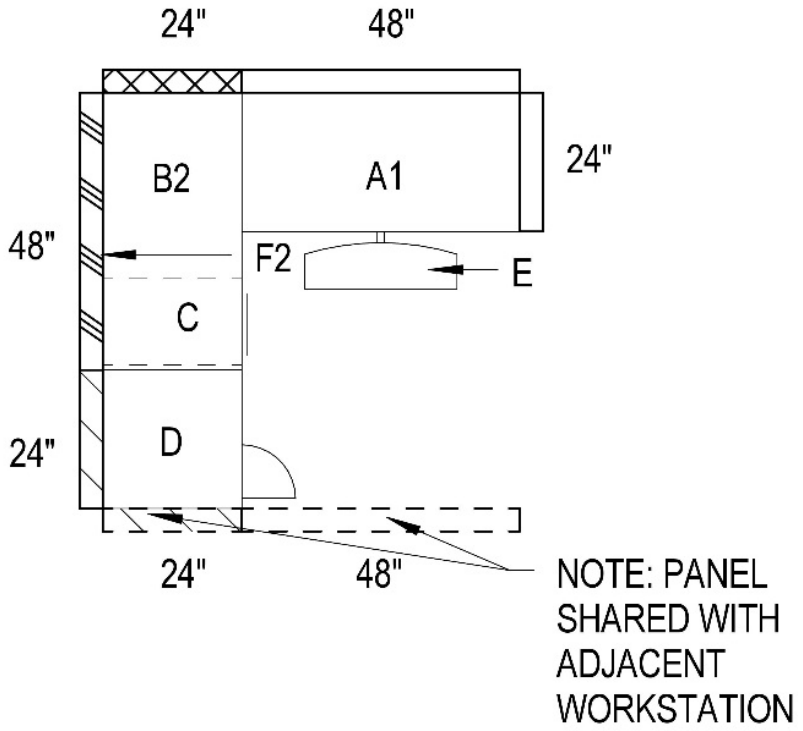

FIXED WORKSTATION 4.5m² – ORIENTATION 1

3-D View	Plan View
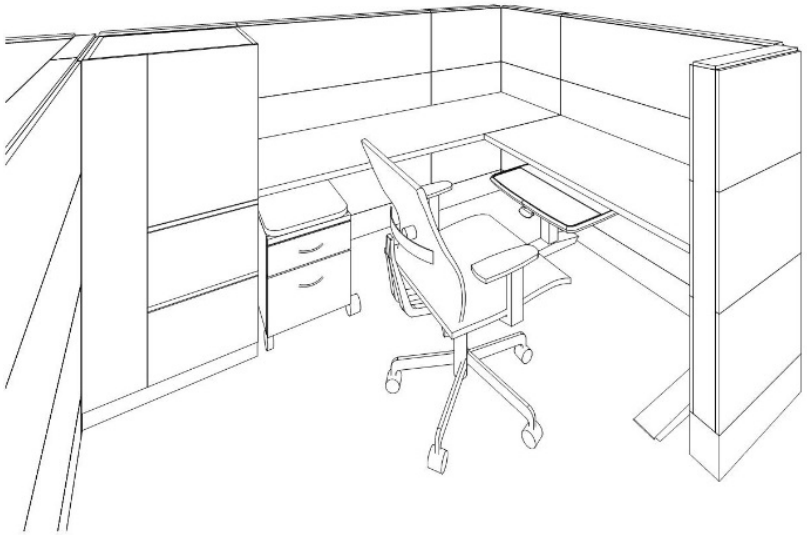	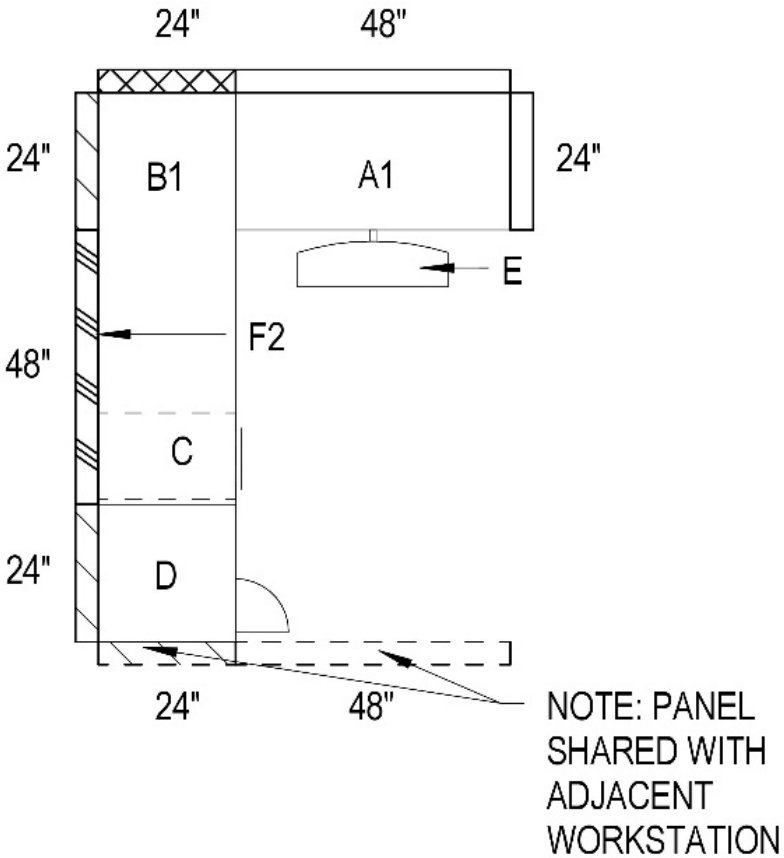

FIXED WORKSTATION 4.5m² – ORIENTATION 2

3-D View	Plan View
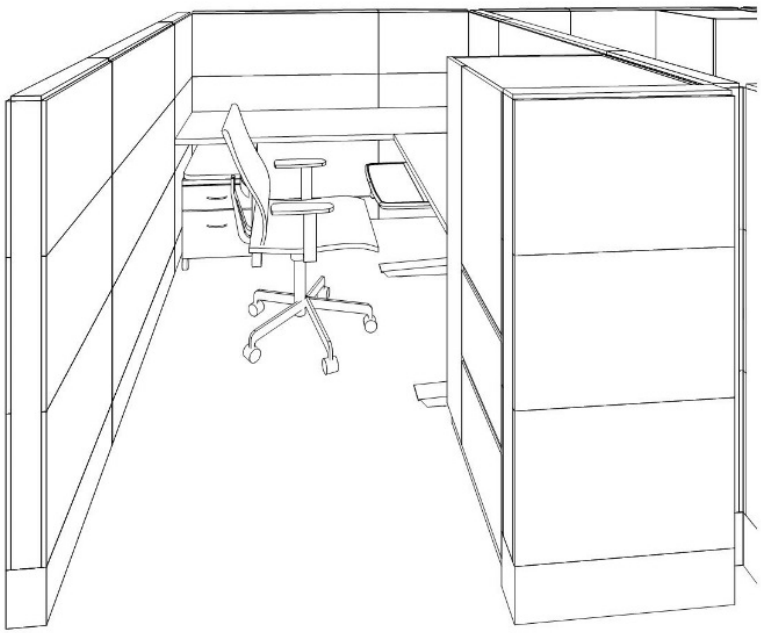	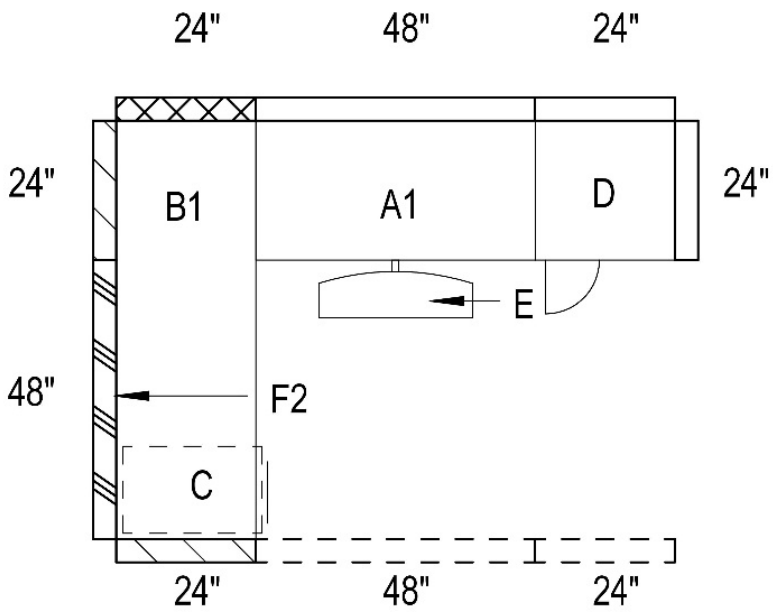

FIXED WORKSTATION 4.5m² – ORIENTATION 1 BULLPEN

3-D View

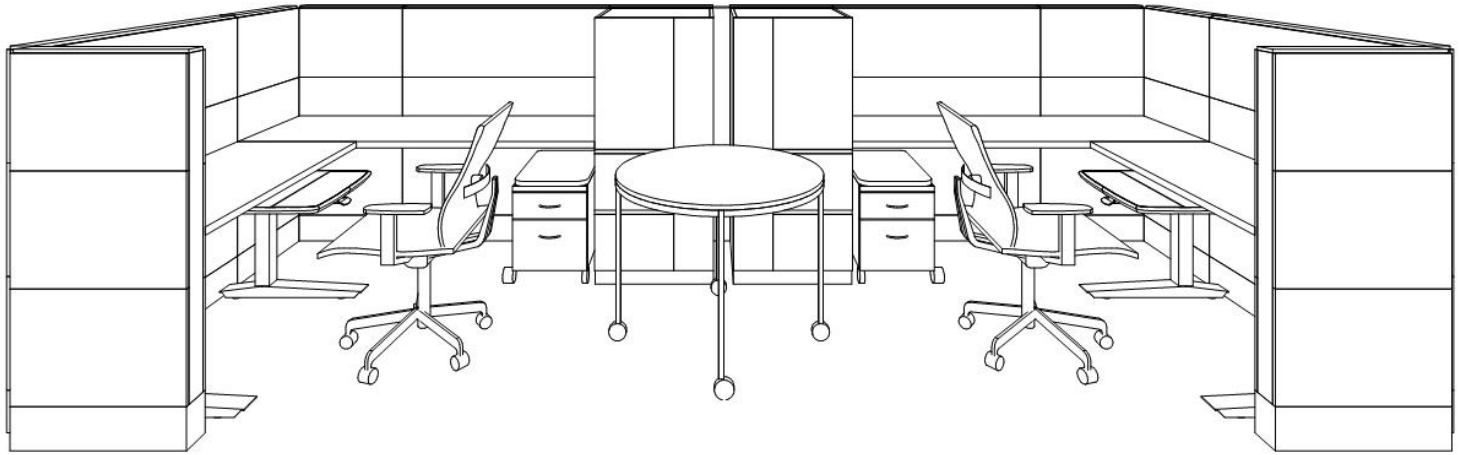

Plan View

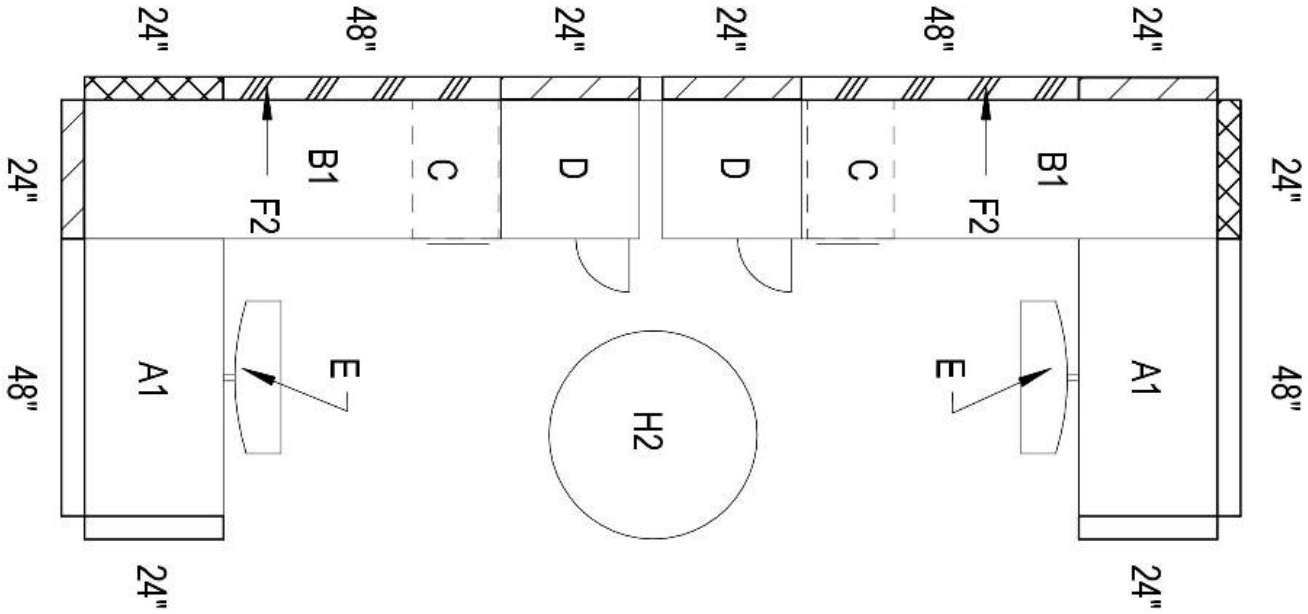

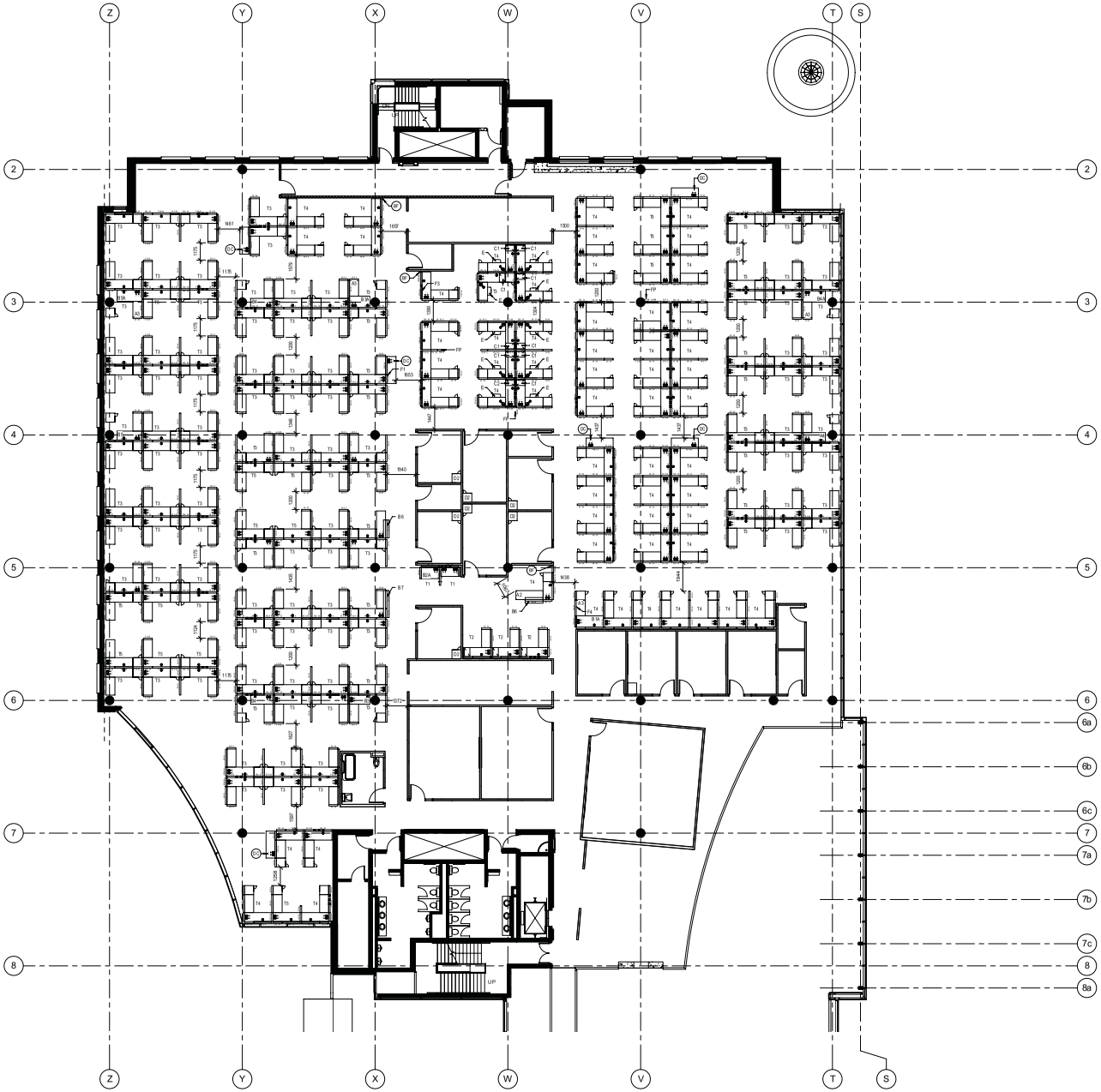

1 ANNEX A-4
SCALE: 1 : 100

ANNEX A-4 - NOTES

GENERAL:
- Include keyboard trays (E) only where shown
- Include pedestals (C1 and C2) only where shown
- Include task lights only where shown
- Refer to panel text indicated on Annex A-4 layout for panel sizes and type

ANNEX A-4 - LEGEND

Typical Workstations. Refer to Annex A-3 for layout information

T1	Free
T2	Flex
T3	Fixed Orientation 1
T4	Fixed Orientation 2
T5	Bullpen
■■■	UTILITY POLES / GROUP OF 5 SPACE (MINIMUM 152mm (6") APART). ACCOUNT FOR ADDITIONAL UTILITY POLES AS REQUIRED TO PROVIDE THE APPROPRIATE QUANTITY OF CIRCUITS WITHIN A WORKSTATION CLUSTER - ONE POLE FOR NETWORK 1 CABLES - ONE POLE FOR NETWORK 2 CABLES - MINIMUM 1 POLE FOR POWER
(B)	BASE FEED
(D)	EACH DUPLEX RECEPTACLE TO BE ON A DEDICATED CIRCUIT
	TASK LIGHT - LED
	DUPLEX RECEPTACLE
	QUADRAPLEX DATA RECEPTACLE
"P"	PANEL TEXT INDICATES P = POWERED, WIDTH HEIGHT
"T"	TOP STACK ON UNIT TO BE GLAZING

ATYPICAL SYSTEMS FURNITURE COMPONENTS

Atypical systems furniture components. Refer to Annex A-4 layout for locations

Free-standing, Height-adjustable Work Surfaces

A2	610mm D x 1829mm W (24" x 72")
A3	610mm D x 1067mm W (24" x 42")
A4	610mm D x 1524mm W (24" x 60")

Panel-hung Work Surfaces

B3	610mm D x 1371mm W (24" x 54")
B4	610mm D x 1524mm W (24" x 60")
B5	610mm D x 1676mm W (24" x 66")
B6	1219mm W (48") transaction work surface
B7	1829mm W (72") transaction work surface
B1A	762mm D x 1829mm W (30" x 72")
B2A	762mm D x 1220mm W (30" x 48")
B3A	762mm D x 1371mm W (30" x 54")
B4A	762mm D x 1524mm W (30" x 60")
B5A	762mm D x 1676mm W (30" x 66")

Retail Middle Storage Pedestals

C1	With upholstered seat cushion
C2	Without upholstered seat cushion

Accessory Rails

F1	610mm (24")
F3	914mm (36")
F4	1067mm (42")

Other Atypical Components

D2	1575mm - 1676mm H (62" - 66") Storage Tower (Enclosed offices)
E	Articulating keyboard and mouse support surface
FP	Filler Panel, refer to panel layout to determine size

CCP - Ph2 Draft Furniture - (ED DD Jan 29-16)

ID	Task Name	Duration
1	**CCP Phase 2 Furniture**	**250 days**
2	**Building Dust Free Dates**	**100 days**
3	Building 5	0 days
4	Building 3	0 days
5	Building 2	0 days
6	Pavilion	0 days
7	**Building 5 (+/-1900 Workstations)**	**160 days**
8	**Level 1 (+/-630)**	**100 days**
9	Installation Drawings	10 days
10	Approvals/Order Entry	5 days
11	Manufacturing/Refurbishment	40 days
12	Furniture - Panels, poles & electrical	30 days
13	*Data Cable (By Others)*	30 days
14	Furniture - Worksurfaces	30 days
15	**Level 2 (+/-630)**	**100 days**
16	Installation Drawings	10 days
17	Approvals/Order Entry	5 days
18	Manufacturing/Refurbishment	40 days
19	Furniture - Panels, poles & electrical	30 days
20	*Data Cable (By Others)*	30 days
21	Furniture - Worksurfaces	30 days
22	**Level 3 (+/-630)**	**100 days**
23	Installation Drawings	10 days
24	Approvals/Order Entry	5 days
25	Manufacturing/Refurbishment	40 days
26	Furniture - Panels, poles & electrical	30 days
27	*Data Cable (By Others)*	30 days
28	Furniture - Worksurfaces	30 days
29	**Building 3 (+/-1950 Workstations)**	**160 days**
30	**Level 1 (+/-650)**	**100 days**
31	Installation Drawings	10 days
32	Approvals/Order Entry	5 days
33	Manufacturing/Refurbishment	40 days
34	Furniture - Panels, poles & electrical	30 days
35	*Data Cable (By Others)*	30 days
36	Furniture - Worksurfaces	30 days
37	**Level 2 (+/-650)**	**100 days**
38	Installation Drawings	10 days
39	Approvals/Order Entry	5 days
40	Manufacturing/Refurbishment	40 days
41	Furniture - Panels, poles & electrical	30 days
42	*Data Cable (By Others)*	30 days
43	Furniture - Worksurfaces	30 days
44	**Level 3 (+/-650)**	**100 days**
45	Installation Drawings	10 days
46	Approvals/Order Entry	5 days
47	Manufacturing/Refurbishment	40 days
48	Furniture - Panels, poles & electrical	30 days
49	*Data Cable (By Others)*	30 days
50	Furniture - Worksurfaces	30 days
51	**Building 2 (+/-360 Workstations)**	**90 days**
52	**Level 1 (+/-110)**	**70 days**
53	Installation Drawings	10 days
54	Approvals/Order Entry	5 days
55	Manufacturing/Refurbishment	40 days
56	Furniture - Panels, poles & electrical	5 days
57	*Data Cable (By Others)*	5 days
58	Furniture - Worksurfaces	5 days
59	**Level 2 (+/-110)**	**70 days**
60	Installation Drawings	10 days
61	Approvals/Order Entry	5 days
62	Manufacturing/Refurbishment	40 days
63	Furniture - Panels, poles & electrical	5 days
64	*Data Cable (By Others)*	5 days
65	Furniture - Worksurfaces	5 days
66	**Level 3 (+/-110)**	**70 days**
67	Installation Drawings	10 days
68	Approvals/Order Entry	5 days
69	Manufacturing/Refurbishment	40 days
70	Furniture - Panels, poles & electrical	5 days
71	*Data Cable (By Others)*	5 days
72	Furniture - Worksurfaces	5 days
73	**Building Pavilion (+/-150 Workstations)**	**75 days**
74	**Level 1 (+/-110)**	**75 days**
75	Installation Drawings	10 days
76	Approvals/Order Entry	5 days
77	Manufacturing/Refurbishment	40 days
78	Furniture - Panels, poles & electrical	10 days
79	*Data Cable (By Others)*	10 days
80	Furniture - Worksurfaces	10 days

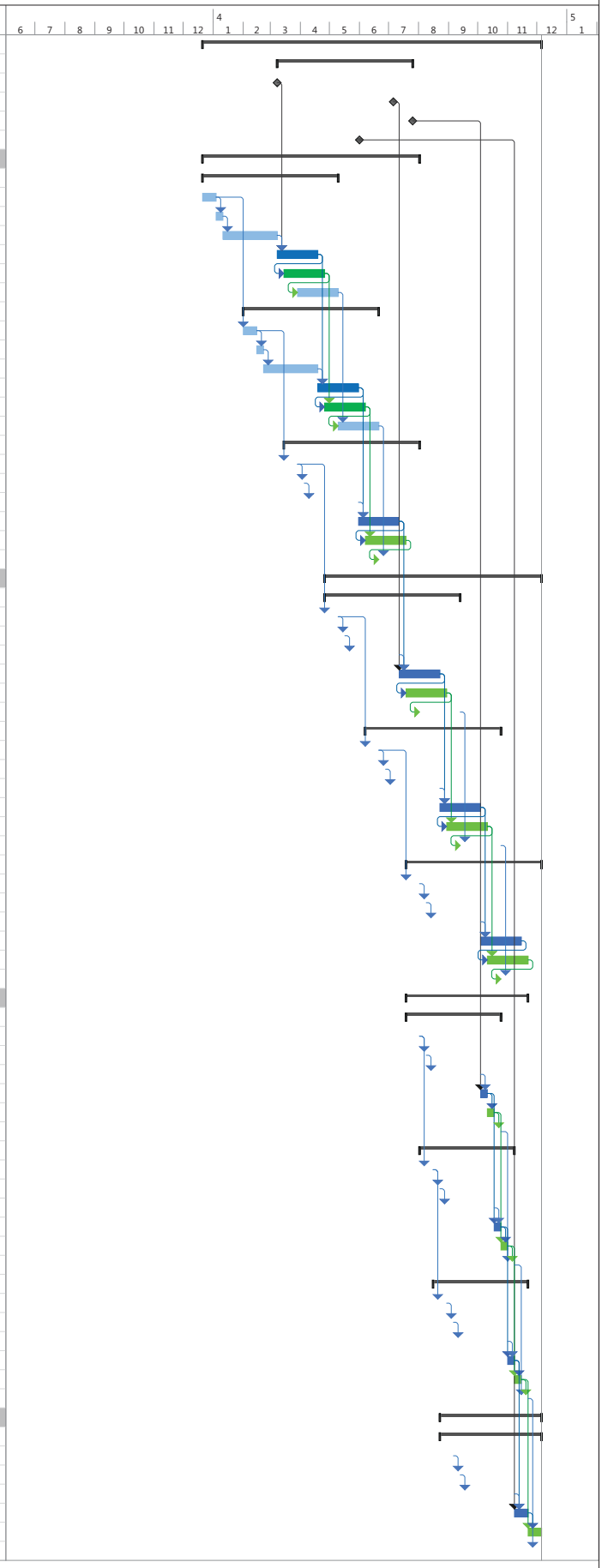

ANNEX A-8
POWER/COMMUNICATIONS

1. DESCRIPTION

This technical specification is for the power and communications.

1. **General Requirements**

1.1. All interconnected panel systems must provide at least three raceways; Raceway 1 for fiber optic cables, Raceway 2 for copper communication cables, and Raceway 3 for power cables/wires with a minimum of 152mm (6") clear space between raceways, vertically and horizontally.

1.1.1. Raceways must be arranged such that Raceway 1 is in the uppermost position and is above the work surface, Raceway 2 is in the intermediate position and Raceway 3 is in the lowest position.

1.1.2. Each raceway must maintain a minimum of 152mm (6") clear space, both vertically and horizontally, between cable/wires of different raceways along the entire length of the raceway.

1.1.3. Raceways must be accessible from both sides of the interconnected panel system by removal of fabric tile, trim or similar method.

1.1.4. Raceway corners and openings must be a minimum ¾" wide to ensure ease of cable installation with connectors, to accommodate termination of cables to faceplates. Raceway corners and opening must ensure fill ratios are no more than 40% for the cable and wire requirements as defined in Sections 2, 3, and 4.

1.1.5. Knock-outs for communication raceways are to be sized to accommodate tenant-supplied flush-mounted, screw-fastened and angled port modular faceplate. Mounting holes must be pre-drilled and must allow faceplate to be fastened securely to the interconnected panel system. Interior metal brackets must be supplied if fastening to fabric. Refer to Annex XX Communications Faceplate for additional information/specification of faceplate and cable types.

2. **Power:**

2.1. Must provide a minimum eight (8) wire, four circuit electrical system configured as follows:

2.1.1. Three 15 amp circuits with shared neutral

2.1.2. One 15 amp circuit with dedicated neutral

2.1.3. Two dedicated insulated ground conductors

2.2. Modular Power Components:

2.2.1. The interconnected panel electrical system must be made of components which are modular and are capable of providing power at needed locations, and of being rearranged without altering or disassembling the interconnected panel system. The system must provide for ceiling access/top-feed utility poles as well as base feeds.

2.2.2. Receptacles must be interchangeable anywhere along the wiring harness where knock-outs are located.

2.2.3. Each workstation must have three (3) duplex power receptacles.

2.2.4. Minimum of one electrical circuit must be provided to supply power for two workstations.

2.3. Electrical connections between panels and to the utility pole to be made by furniture installer. Electrical connections between the utility pole (power whip) to building electrical distribution will be performed by others

3. **Optical Communications:**

3.1. Raceway 1 and associated utility pole must accommodate a minimum of eight (8) fiber optic cables not exceeding a 40% fill ratio.

3.2. Nominal cable diameter is 5mm (0.20") with an installed minimum bend radius of 50mm (2.0"), Refer to Annex XX Fiber Cabling.

3.3 Interconnected panel system must accommodate a minimum of two (2) quadraplex communication module (supplied by tenant) knockouts with pre-drilled mounting holes, per workstation for optical communications.

3.4. Knockouts/openings for optical communications in adjacent workstations must be offset with minimum spacing of 102mm (4") to avoid back-to-back installation.

3.5. Optical communication cabling to be supplied and installed by others.

4. **Copper Communications:**

4.1. Raceway 2 and associated utility pole must accommodate a minimum of sixteen (16) copper communication cables not exceeding a 40% fill ratio.

4.2. Nominal cable diameter is 5.5mm (0.22") with minimum bend radius of 22.15mm (0.A57"), Refer to Annex XX Copper Cabling.

4.3. Interconnected panel system must accommodate a minimum of two (2) quadraplex communication module (supplied by tenant, refer to Annex XX for specifications) knockouts, per workstation for copper communications.

4.4. Copper communication cabling to be supplied and installed by others.

5. **Utility Poles**:

5.1. Must provide a minimum of three top-feed utility poles per cluster: one (1) for fiber cables, one (1) for copper cables and one (1) for power cables – with minimum 152mm (6") clearance between each utility pole

5.2. Must be high-capacity utility poles: Must meet the fill capacity of no more than 40% per utility pole as per Section 1

5.3. Must provide whips for connection to electrical junction boxes in lengths listed in Annex XX - Basis of Payment.

5.4. Must provide base feed whips for hardwire connection in partitions in lengths listed in Annex XX - Basis of Payment.

5.5. Utility poles must be provided for two ceiling conditions:

5.5.1. Open Ceiling: Utility pole must reach 304A5mm (120”) above finished floor and will require a restraint to be performed by others. Restraint shall not void or impact systems furniture manufacturer’s warranty. Utility pole must include a trim piece or other at the top of the utility pole that provides a means of securing an aircraft cable restraint to the top of the utility pole.

Aircraft cable restraint (by others) will extend from the trim/other at the top of the utility pole to the ceiling slab. There will be approximately 914mm (36”) from the top of the utility pole to the underside of the ceiling slab.

5.5.2. Suspended T-bar Ceiling System: Utility poles must be provided for ceiling height of 2591mm (102”) typically, including trim piece for installation at ceiling tile cuts. Refer to Annex XX - Basis of Payment for utility pole sizes.

5.6. Ceiling tile cuts and re-installation of ceiling tiles will be performed by others.

ANNEX A
INDUSTRY ENGAGEMENT PROPOSED TOPICS FOR DISCUSSION

This template is being provided to assist Industry and Canada to prepare for Industry Day and to facilitate the engagement process. Your written response are encouraged but optional.

Header Information in Company's format

Industry Engagement
Proposed Discussion Topics
DATE
Company ABC Response

On this title page, please provide:
Company Information (Company Name, Address, Web address, etc.)
Contact Information (Name, Title, Phone, E-mail Address)
Document Protection Level (Optional)

Footer Information in Company's format Page X of X

The intent of this document is to present possible topics for discussion to promote open dialogue while working in collaboration with Industry in the development of a simplified performance-based SOW and Evaluation Methodology. This collection of topics is by no means exhaustive and Canada encourages participants to bring forward any other key issues that they consider to be relevant.

Consideration of and responses to this document will play an important role in this engagement process by fostering open discussion. Initiatives that fall within the scope of the requirement are encouraged and are open to discussion during the One-on-One and sessions.

Instructions:

1) This document template is intended to provide guidance to Industry in preparing for the Industry Engagement Session, One-on-One meetings, and their discussion papers. It is not expected that all questions will elicit a response; neither should submissions be constrained by the questions or topics of discussion;

2) Use the written format of your choice, but keep the same section numbering to facilitate Canada's analysis of all responses;

3) The number of pages of your response is not limited. However the expected length should not exceed 30 pages single sided standard business format.

4) Written responses are to be provided electronically in MS Word or PDF format.

Questions:

GENERAL SOLUTIONS BASED QUESTIONS:
1. As a Bidder, is the RFSO clear, and is there sufficient information provided for you to submit a bid? 2. If not, please provide specific areas where more information is required.
3. Canada has provided a draft evaluation plan. a. Do you have comments or suggestions? b. Is the Evaluation Criteria and selection methodology clear? c. Are there any areas in the Evaluation Criteria that you would like to see changed?

d. Do you feel that you can provide a compliant offer?
4. Where would you see the main opportunities to achieve improvements in this process / RFSO?
5. Are there any particular areas of flexibility/relaxation of constraints that you would require from Canada in order to make innovations / efficiencies?
6. What would you consider to be the minimum qualifications required for a company to participate in this RFSO process?
7. If you are a supplier who can supply some but not all of the products and or services you believe would be the optimal Solution for this RFSO, would you consider a joint venture with another supplier? 8. If yes, under what conditions?
9. If one bidder cannot fulfill all the requirements as listed in the enclosed SOW and associated Annexes, should Canada issue more than one Standing Offer to allow products and services fulfilling the SOW to come from more than one supplier? 10. How would you recommend this be divided? 11. Do you feel that more than one supplier is required to meet the schedule?
PRODUCT AND TECHNICAL QUESTIONS
12. Can one RFSO ask bidders for a holistic solution that may involve new, used, and/or refurbished / remanufactured interconnected panel systems components? If not, how should the Government of Canada endeavour to evaluate these options with the intent of arriving at a solution that meets stated economic, logistic and environmental requirements?
13. Can one RFSO ask bidders for an interconnected panel Solution that potentially involves refurbishing both Herman Miller and Teknion products?
14. From your perspective, what are the key elements that feed into the decision to purchase new interconnected systems furniture and/or re-use existing assets?
15. What are the risks involved in re-using existing interconnected panel systems assets that are mitigated by purchasing new? 16. How can these risks be mitigated? 17. What are the risks in using new vs re-using existing?
18. Some of DND's existing interconnected panel system components have already been inventoried and warehoused in anticipation of their potential use at the Carling Campus. These inventories are provided at Annex D. Do you have any concerns with

accessing and using these inventories? 19. Is there any additional information that you would require? 20. Is the format provided adequate or would you recommend any changes?
21. It is understood that the supply and installation of new interconnected panel systems furniture is less time consuming than refurbishing and re-installing existing interconnected panel systems furniture. What can be done to keep the time needed for the refurbish process to a minimum?
22. Do you have any concerns given the scale and duration of refurbishment for this requirement (approximately 5,000 workstations over 2 years)? 23. If yes, please provide details. 24. If yes, how would you propose the RFSO be changed to address these concerns?
25. In reviewing the attached draft schedule (Annex E) do you have any concerns with the amount of time between contract award and the start of installations? 26. Any concerns with the workload rate of installation? 27. If yes, what can be done to address these concerns?
28. Do you have a program for taking possession of surplus interconnected panel system components for either recycling and / or remanufacturing and/or donating? 29. If yes, would Canada receive a dollar credit for the product you take back?
30. Are there any other key issues with the proposed technical aspects of this SOW that you consider relevant?
31. Can you provide a response to this RFSO without a formal inventory of the assets identified for potential re-use at the 5 DND sites identified?
32. What warrantee can Canada expect to have on: a. Refurbished existing furniture on site? b. Remanufactured furniture from another location?
33. How much time should be allowed for product inspection and inventory of the following number of existing assembled interconnected panel systems furniture workstations (by number of working days and number of hours per day): a. 25 workstations b. 50 workstations c. 100 workstations d. 1000 workstations
34. How should pick up, transportation and delivery of re-used product be priced – by time (hourly), by kilometer, other?
35. What electronic inventory formats do you typically use (ie Excel spreadsheets, MS

Word documents, other)?
36. When disposing of a full workstation, what materials can or cannot be recycled? 37. Are there recognized recycling facilities that can attest or validate the quantity of materials that were recycled? 38. When disposal of existing furniture is required, is there a solution that is better than recycling that we have not considered?
39. What is your standard method of disposal for interconnected panel systems furniture and associated freestanding components? 40. How do you price this service?
41. How many cubic feet do you require to store a 6'-0" x 8'-0" workstation?
42. Two inventories have been provided for existing interconnected panel systems furniture warehoused at Carling Campus. Do these inventories provide the information you require, in the format required? If not, please elaborate.
43. Is it preferable for inventories of the interconnected panels systems available for re-use and located at the existing DND sites to be inventoried prior to this procurement being posted, or do you recommend inventorying these assets be included as part of the procurement? Please explain.
44. Can you provide an inventory management system that meets article 6.1 and 6.2 or the Statement of Work? If so, how should pricing be determined?
45. It is understood that installation of 100 workstations per week is standard. Is it possible to install: a. 200 workstations per week? b. 300 workstations per week? c. 400 workstations per week? d. Given anything is possible given enough time and money, if you have answered yes to a., b., and/or c., are there considerations we need to appreciate that make one or more of these options unrealistic even if they are possible?