NOTES:

1. CABLES AND EQUIPMENT SHOWN IN DOTTED LINES ARE PLANNED FOR REUSE. CONTRACTOR TO MEASURE AND REUSE FOR PROJECT.
2. DEPARTMENTAL REPRESENTATIVE TO ADVISE ON RATINGS FOR SPARE BREAKERS
3. ALL BREAKERS ARE 3-POLE

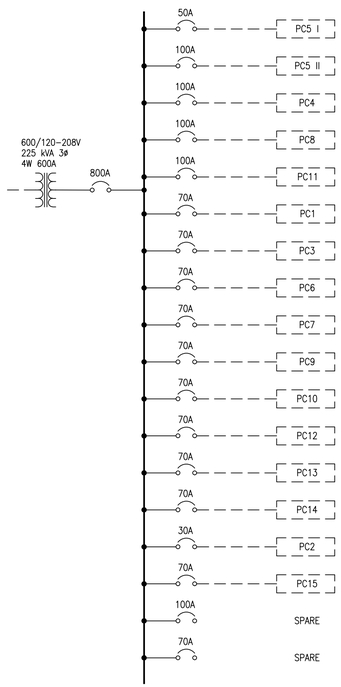

1 E2-03 PANEL 'T-CA'
N.T.S.

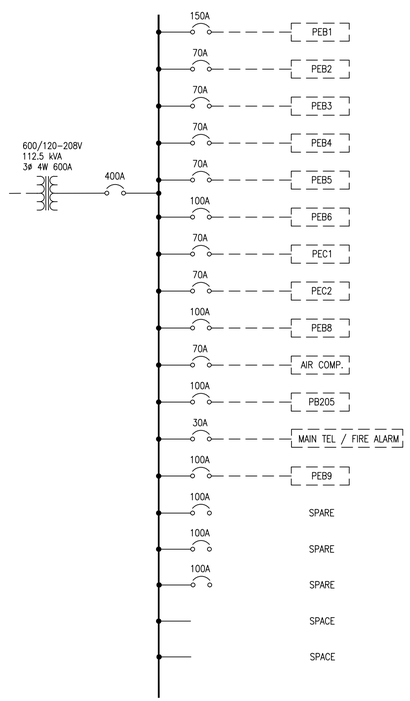

2 E2-03 PANEL 'T-EB'
N.T.S.

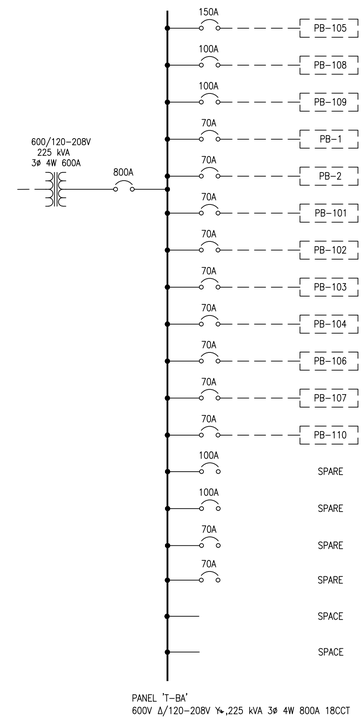

3 E2-03 PANEL 'T-BA'
N.T.S.

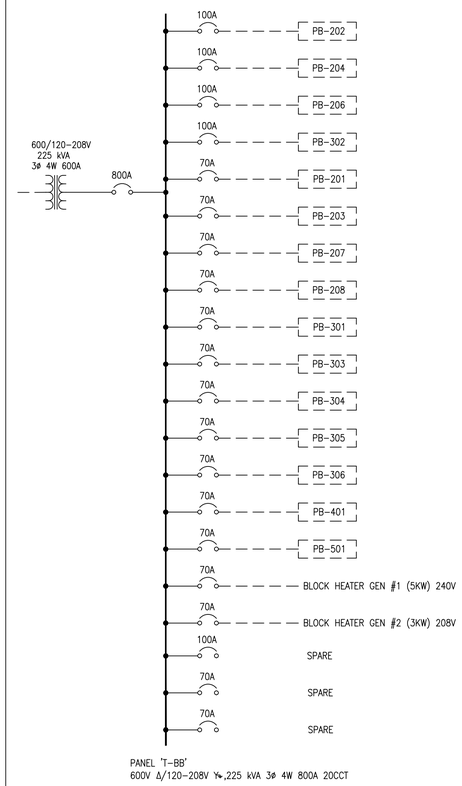

4 E2-03 PANEL 'T-BB'
N.T.S.

Canada

Publics Works and Government Services Canada — Travaux publics et services gouvernementaux Canada
Real Property Branch — Direction générale des biens immobiliers

LEGEND

Goodkey Weedmark
Consulting Engineers
GOODKEY WEEDMARK & ASSOCIATES LIMITED
1688 Woodward Dr. Ottawa Ontario Canada K2C 3R8
613 727-5111 Voice
613 727-5115 Fax
www.gwal.com Web

HHAngus
HHAngus & Associates Limited Consulting Engineers
1127 Leslie Street, Toronto, ON, M3C 2J6 Canada
www.hhangus.com | T 416 443 8200 | F 416 443 8290

LICENSED PROFESSIONAL ENGINEER
J.P. ISAAC
PROVINCE OF ONTARIO

Stamp

Stamp

Date	Revision
2016/04/27	Issued for Tender
2016/04/25	Issued for Tender
2016/03/30	Issued for Tender
2016/03/11	Re-Issued for 100% Review and Translation
2016/02/26	Issued for 100% Review and Translation
2016/02/19	Issued for Tender
2016/01/08	Issued for 99% submission
2015/12/17	Issued for 66% submission
2015/08/21	Issued for RS 2.0

Stamp

project / projet

CFIA
Olf Electrical Upgrades

drawing / dessin

PANEL SCHEDULE DETAILS
ELECTRICAL ROOM
NEW – PHASE 2

Drawn By: S.S.
Date 2015-06-24
Reviewed By: P.I.
Date 2016-01-25
Project no. / No. du projet M10139
Drawing no. / No. du dessin E2-03