GOVERNMENT OF CANADA UPGRADES TO TBU-61 - D-BLOCK BUILDING CRAWLSPACE IMPROVEMENTS

CONSULTANTS

Stantec

Architectural
Stantec Architecture Ltd.

Structural
Stantec Consulting Ltd.

Mechanical
Stantec Consulting Ltd.

Electrical
Stantec Consulting Ltd.

Landscape
Stantec Consulting Ltd.

ISSUED FOR TENDER & CONSTRUCTION

APRIL 15, 2016

Client Project Number: 1004207

STANTEC Project Number: 144401453

DRAWING LIST

ARCHITECTURAL DRAWINGS

A0.1	INFORMATION SHEET
A2.0	SITE INFORMATION PLAN
A2.1	BASEMENT / CRAWLSPACE PLAN
A2.2	MAIN FLOOR PLAN
A2.3	PARTIAL SECOND, THIRD, FOURTH & ROOF PLANS CHILLER ROOM PLAN
A3.1	SECTIONS & DETAILS

STRUCTURAL DRAWINGS

S1.1	CRAWLSPACE RETAINING WALL PLAN
S2.1	CRAWLSPACE SECTIONS & DETAILS
S3.1	CRAWLSPACE TYPICAL DETAILS AND GENERAL NOTES
S4.1	PARTIAL ROOF PLAN & DETAILS

MECHANICAL DRAWINGS

M1.1	MECHANICAL LEGEND
M1.2	BASEMENT & CRAWLSPACE HVAC AND PLUMBING DEMOLITION AND NEW PLAN
M1.3	PARTIAL BASEMENT & FAN ROOM HVAC DEMOLITION AND NEW PLAN
M1.4	MECHANICAL ROOM HVAC - DEMOLITION AND NEW PLAN
M1.5	PARTIAL ROOF AND CHILLER ROOM HVAC - NEW PLAN
M1.6	MECHANICAL EQUIPMENT SCHEDULES PLAN 1OF 2
M1.7	MECHANICAL EQUIPMENT SCHEDULES PLAN 2 OF 2
M1.8	CHILLED WATER DIAGRAM AND DETAILS PLAN
M1.9	HVAC - DETAILS
M1.10	BASEMENT & CRAWLSPACE HEATING DEMOLITION AND NEW PLAN
M1.11	MAIN FLOOR HEATING DEMOLITION AND NEW PLAN
M1.12	2ND, 3RD, AND 4TH FLOOR TYPICAL HEATING DEMOLITION AND NEW PLAN
M1.13	BASEMENT & CRAWLSPACE AIR CONDITIONING DEMOLITION AND NEW PLAN
M1.14	MAIN FLOOR AIR CONDITIONING DEMOLITION AND NEW PLAN
M1.15	2ND, 3RD, AND 4TH FLOOR TYPICAL AIR CONDITIONING DEMOLITION AND NEW PLAN
M1.16	HVAC CONTROL DIAGRAMS PLAN 1OF 2
M1.17	HVAC CONTROL DIAGRAMS PLAN PLAN 2 OF 2
M1.18	BASEMENT & CRAWLSPACE FIRE PROTECTION DEMOLITION AND NEW PLAN

ELECTRICAL DRAWINGS

E1.1	ELECTRICAL - BASEMENT AND CRAWLSPACE PLAN DEMOLITION
E2.1	ELECTRICAL - BASEMENT AND ROOF NEW CONSTRUCTION
E2.2	ELECTRICAL - CRAWLSPACE POWER PLAN NEW
E6.1	ELECTRICAL SINGLE LINE DIAGRAM AND SCHEDULES
E6.2	ELECTRICAL PANEL SCHEDULES

LANDSCAPE DRAWINGS

L1.0	VEGETATION PRESERVATION AND REMOVALS PLAN
L2.0	LANDSCAPE PLAN AND DETAILS
L3.0	IRRIGATION DRAWING AND NOTES

KEY PLAN

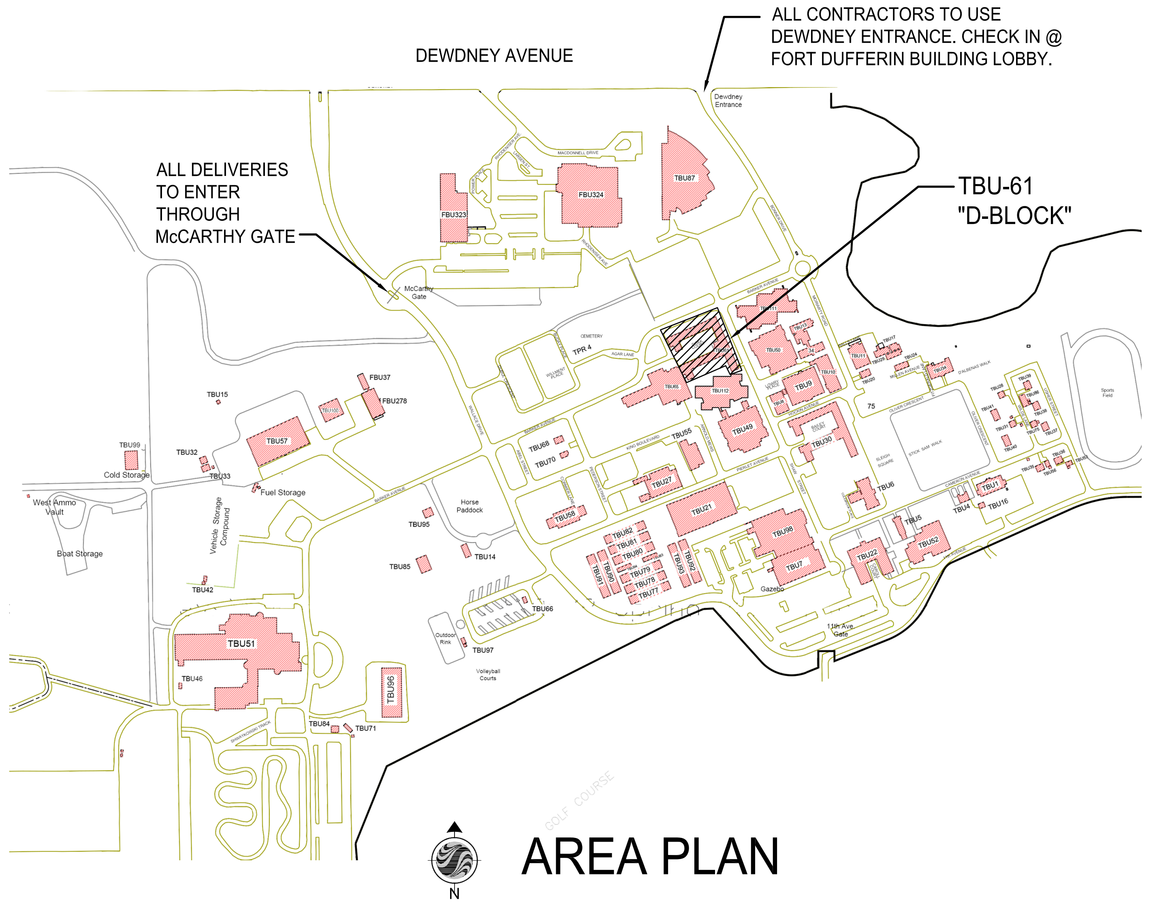

AREA PLAN

VIEW OF D-BLOCK BUILDING LOOKING SOUTH

GENERAL NOTES

1. ALL DRAWINGS ARE THE PROPERTY OF THE CONSULTANTS. NO REPRODUCTION MAY BE MADE WITHOUT THE WRITTEN CONSENT OF THE CONSULTANT. ALL REPRODUCTIONS MUST BEAR THE NAME OF CONSULTANT.
2. THESE DRAWINGS SHALL NOT BE SCALED.
3. FOLLOW GIVEN DIMENSIONS ONLY. THE CONTRACTOR SHALL SATISFY HIMSELF THAT ALL DIMENSIONS, DATUMS AND INFORMATION SHOWN ARE CORRECT. VERIFY ALL DIMENSIONS ON SITE. DIMENSIONS ARE TO FACE OF MASONRY WALLS AND FACE OF POURED CONCRETE WALLS UNLESS OTHERWISE NOTED. INTERIOR DIMENSIONS ARE TO CENTERLINE OF WALL STUDS OR TO THE FACE OF THE FLOOR LINE - I.E. CHANGE IN FLOOR ELEVATION AND/OR FLOOR FINISH MATERIAL. FACE OF PARTITIONS SHALL ALIGN WITH THE FLOOR LINES.
4. PRIOR TO ANY COMMENCEMENT OF WORK, REPORT ANY DISCREPANCIES TO THE CONSULTANT. VARIATIONS AND MODIFICATIONS TO WORK SHOWN WILL NOT BE ALLOWED WITHOUT THE WRITTEN PERMISSION OF THE CONSULTANT.
5. ALL DIMENSIONS ARE MILLIMETERS UNLESS OTHERWISE NOTED.
6. PROTECT ALL MATERIALS FROM DAMAGE DUE TO CONSTRUCTION.
7. REPAIR ALL DAMAGE TO MATCH EXISTING.
8. THE GENERAL CONTRACTOR SHALL NOTIFY THE ENGINEER OF ANY MECHANICAL AND ELECTRICAL APPARATUS THE APPEARANCE OF WHICH MAY VARY FROM THAT INDICATED IN THE CONTRACT DOCUMENTS.
9. ALL PENETRATIONS THROUGH A RATED PARTITION, MECHANICAL ROOM, JANITOR, ELECTRICAL ROOM AND CORRIDORS ARE TO BE SEALED USING AN APPROVED FIRESTOPPING MATERIAL IN ACCORDANCE WITH DRAWINGS AND SPECIFICATIONS.
10. ALL FLOOR PENETRATIONS TO BE SEALED USING AN APPROVED FIRESTOPPING MATERIAL FOR 1-HOUR ASSEMBLIES. 2-HOURS ABOVE MECHANICAL ROOM IN BASEMENT.

LIST OF ABBREVIATIONS

ACM	ASBESTOS CONTAINING MATERIAL
AC TILE	ACOUSTIC TILE
ALUM	ALUMINUM
APPROX	APPROXIMATELY
ARCH	ARCHITECTURAL
BLKG	BLOCKING
BLDG	BUILDING
CLG	CEILING
COL	COLUMN
COMP	COMPUTER
CPT	CARET
C/W	COMPLETE WITH
CONC	CONCRETE
CB	CONCRETE BLOCK
℄	CENTER LINE
C/C	CENTER TO CENTER
DISP	DISPENSER
DTL	DETAIL
DN	DOWN
DF	DRINKING FOUNTAIN
DWG	DRAWING
ELEC	ELECTRICAL
ELEV	ELEVATION
EQ	EQUAL
EXIST	EXISTING
EXP JT	EXPANSION JOINT
EXT	EXTERIOR
FDN	FOUNDATION
FD	FLOOR DRAIN
FLUOR	FLUORESCENT
FRR	FIRE RESISTENCE RATING
FTG	FOOTING
FURR	FURRING
GL	GLASS, GLAZING
GWB	GYPSUM WALL BOARD
H´CAP	HANDICAP
HT	HEIGHT
HM	HOLLOW METAL
HOR	HORIZONTAL
HB	HOSE BIB
HR	HANDRAIL
INFO	INFORMATION
INSUL	INSULATION
LAV	LAVATORY
MANUF	MANUFACTURER
MO	MASONRY OPENING
MAT	MATERIAL
MAX	MAXIMUM
MD	MANUAL DAMPER
MECH	MECHANICAL
MET	METAL
MIN	MINIMUM
MISC	MISCELLANEOUS
NIC	NOT IN CONTRACT
NTC	NOT TO SCALE
O.C.	ON CENTER
PLYWD	PLYWOOD
PREFAB	PREFABRICATED
PREFIN	PREFINISHED
RD	ROOF DRAIN
RM	ROOM
RO	ROUGH OPENING
RWL	RAIN WATER LEADER
SH	SHOWER
SIM	SIMILAR
SPEC	SPECIFICATION
SS	STAINLESS STEEL
STD	STANDARD
STOR	STORAGE
SUSP	SUSPENDED
TEL	TELEPHONE
TYP	TYPICAL
UR	URINAL
U/S	UNDERSIDE
VB	VAPOUR BARRIER
VENT	VENTILATED
VERT	VERTICAL
WR	WASHROOM
WC	WATER CLOSET
WD	WOOD
W/	WITH
W/O	WITHOUT

Stantec

Stantec Architecture Ltd.
301, 1919 Rose Street
Regina SK Canada
S4P 3P1
Tel. 306.781.6400
Fax. 306.781.6500

Consultants

Legend

Notes

Revision	By	Appd.	YY.MM.DD
1 ISSUED FOR TENDER & CONSTRUCTION	R Mc	B N	16.04.15

Issued	By	Appd.	YY.MM.DD

File Name:

Dwn.	Chkd.	Dsgn.	YY.MM.DD

Permit-Seal

Brontsitsas Nurtsyevski
APRIL 15/2016

Client/Project
GOVERNMENT OF CANADA

UPGRADES TO TBU 61

Regina, Saskatchewan

Title
INFORMATION SHEET

Project No. 144401453

Scale

Drawing No. A0.1

Sheet of

Revision 0

PHOTOGRAPHS OF EXISTING SITE


1


2


10


3

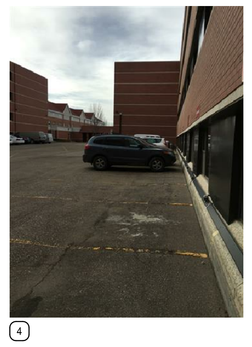
4


11


5

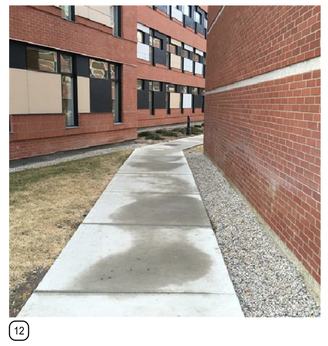
12


6


13

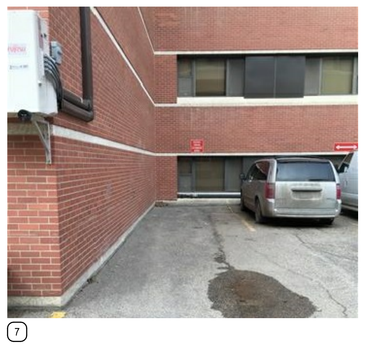
7

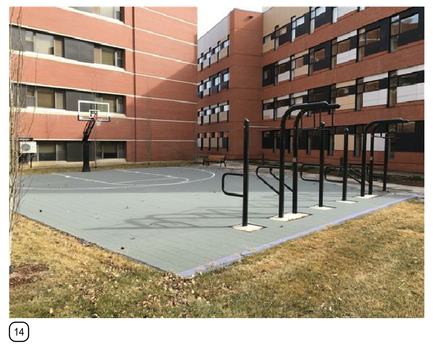
14


8

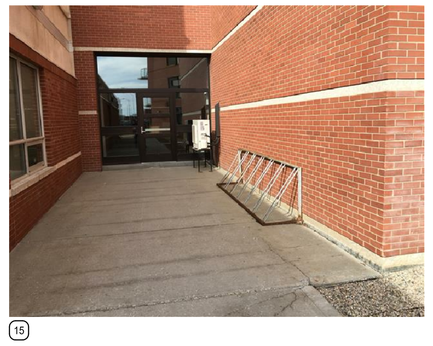
15


9


16

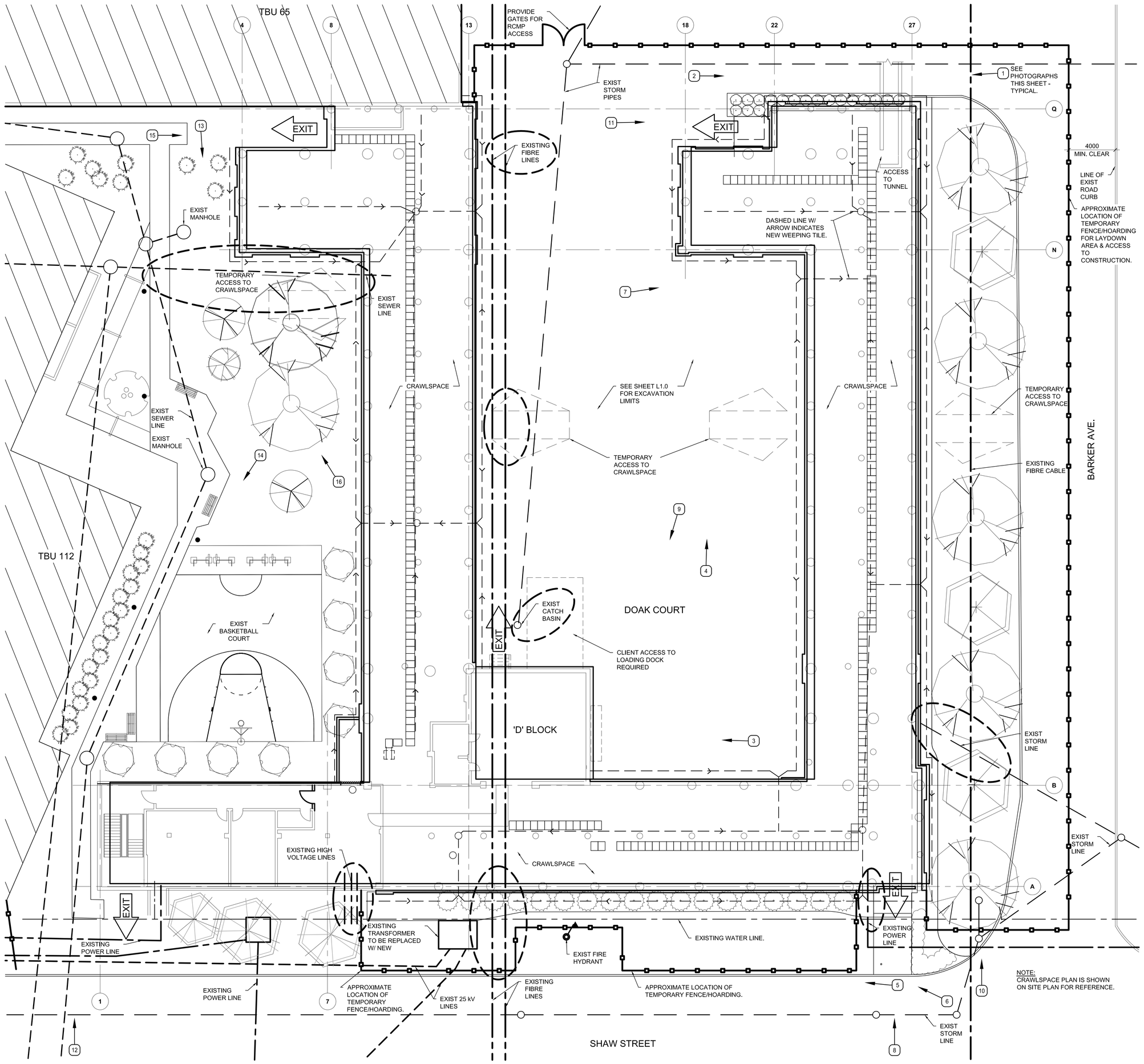

1 A2.0 **SITE INFORMATION PLAN**
1:150

CONTRACTORS SHALL USE A COMBINATION OF EXCAVATION METHODS TO LIMIT THE AMOUNT OF DAMAGE TO THE EXISTING LANDSCAPE AREAS. REPAIRS TO ALL SURFACES IE: LAWNS, MULCH, PAVEMENT AND SPORTS SURFACE TO BE REPAIRED TO THE ORIGINAL STATE.

REMOVAL OF EARTH FROM WITHIN THE CRAWLSPACE SHALL BE DONE BY A COMBINATION OF SKID STEER, HYDRO VAC AND BY SHOVEL.

EARTH REMOVED FROM THE CRAWLSPACE SHALL BE HAULED OFF SITE.

EXCAVATED MATERIAL FROM THE EXTERIOR OF THE FOUNDATION CAN BE REUSED AS BACKFILL MATERIAL.

REFER TO SHEET L1.0 FOR ADDITIONAL SITE INFORMATION.

PROVIDE TEMPORARY RAMPS AT EXISTING ENTRANCES TO MAINTAIN EXITS FROM BUILDING AS REQUIRED.

LEGEND:

ELLIPSE INDICATES APPROXIMATE LOCATION OF IMPORTANT UNDERGROUND UTILITIES THAT ARE TO BE SITE-VERIFIED PRIOR TO COMMENCEMENT OF WORK.

PHOTO LOCATION

Stantec

Stantec Architecture Ltd.
301, 1919 Rose Street
Regina SK Canada
S4P 3P1
Tel. 306.781.6400
Fax. 306.781.6500

Consultants

Legend

Notes

Revision	By	Appd.	YY.MM.DD
1 ISSUED FOR TENDER & CONSTRUCTION	RM	BN	16.04.15

Issued	By	Appd.	YY.MM.DD
File Name:	Dwn.	Chkd.	Dsgn. YY.MM.DD

Permit-Seal

Saskatchewan Association of Architects
Bryan Nurowski
SAA 9435 Regina SK
APRIL 15/2016

Client/Project
GOVERNMENT OF CANADA

UPGRADES TO TBU 61

Regina, Saskatchewan

Title
SITE INFORMATION PLAN

Project No.	Scale
144401453	1:150

Drawing No.	Sheet	Revision
A2.0	of	0

ORIGINAL SHEET - ISO A0

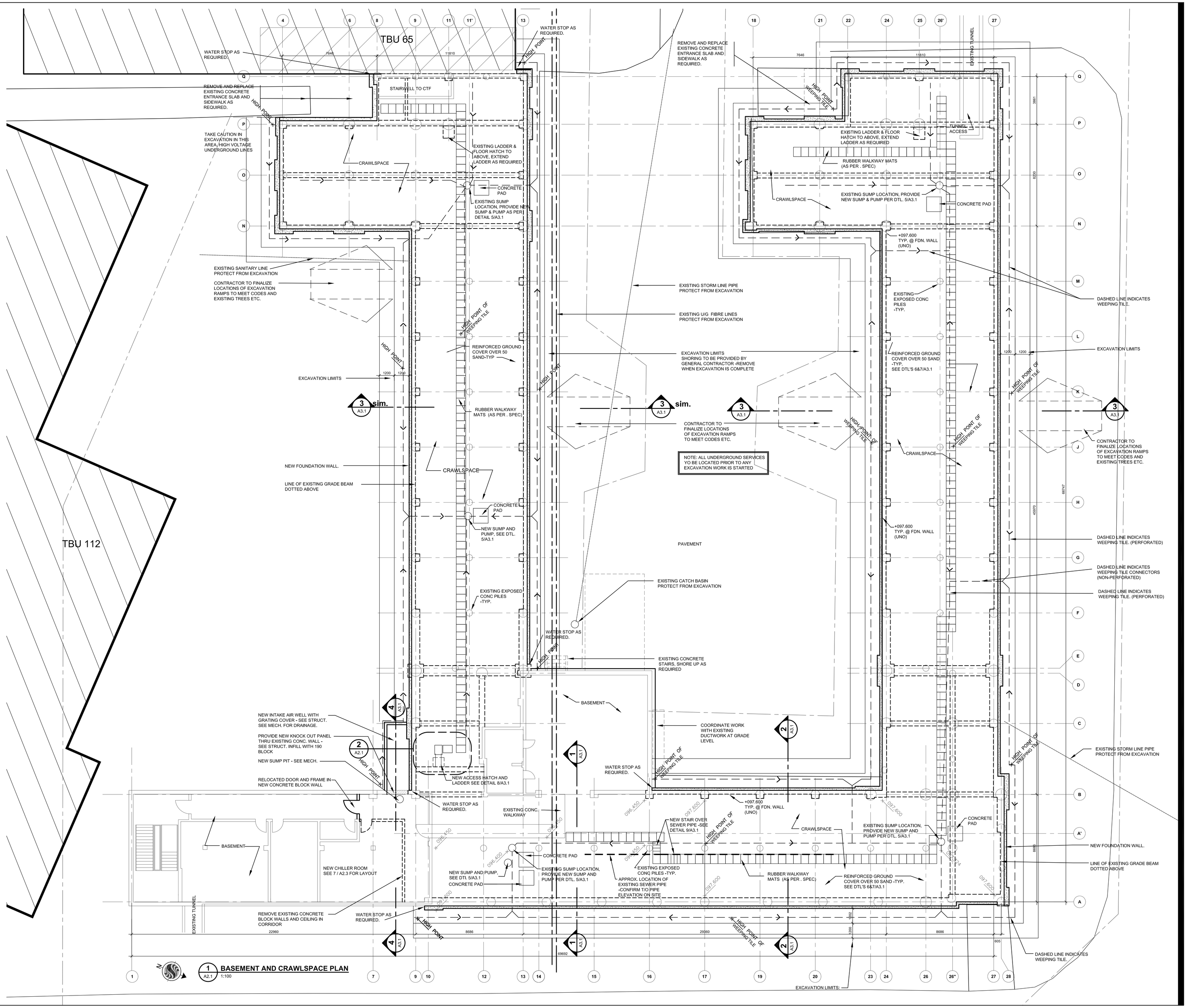

1 A2.1 **BASEMENT AND CRAWLSPACE PLAN**
1:100

Stantec

Stantec Architecture Ltd.
301, 1919 Rose Street
Regina SK Canada
S4P 3P1
Tel. 306.781.6400
Fax. 306.781.6500

Consultants

Legend

Notes

CONTRACTORS SHALL USE A COMBINATION OF EXCAVATION METHODS TO LIMIT THE AMOUNT OF DAMAGE TO THE EXISTING LANDSCAPE AREAS, REPAIRS TO ALL SURFACES IE: LAWNS, MULCH, PAVEMENT AND SPORTS SURFACE TO BE REPAIRED TO THE ORIGINAL STATE.

REMOVAL OF EARTH FROM WITHIN THE CRAWLSPACE SHALL BE DONE BY A COMBINATION OF SKID STEER, HYDRO VAC AND BY SHOVEL.

EARTH REMOVED FROM THE CRAWLSPACE SHALL BE HAULED OFF SITE.

EXCAVATED MATERIAL FROM THE EXTERIOR OF THE FOUNDATION CAN BE REUSED AS BACKFILL MATERIAL.

Revision	By	Appd.	YY.MM.DD
1 ISSUED FOR TENDER & CONSTRUCTION	RMC	BN	16.04.15

Issued	By	Appd.	YY.MM.DD
File Name:	Dwn.	Chkd.	Dsgn. YY.MM.DD

Permit-Seal

Client/Project
GOVERNMENT OF CANADA

UPGRADES TO TBU 61

Regina, Saskatchewan

Title
BASEMENT / CRAWLSPACE PLAN

Project No.	Scale	
144401453	1:100	
Drawing No.	Sheet	Revision
A2.1	of	0

ORIGINAL SHEET - ISO A0

TBU 65

TBU 112

EMERGENCY EXIT TO BE MAINTAINED

REMOVE AND REPLACE EXISTING CONCRETE ENTRANCE SLAB AND SIDEWALK AS REQUIRED.

STAIRWELL TO CTF

EXIST. FLOOR HATCH

STORAGE ROOM

LOUNGE

DRYING ROOM

COORDINATE WITH CLIENT FINAL LOCATION OF CONSTRUCTION FENCE AND GATES.

EXCAVATION LIMITS

EXTENT OF IMPACTED LANDSCAPED AREAS SEE SHEETS L1.0, L2.0 & L3.0.

THESE 4 TREES TO BE SALVAGED AND REPLANTED

REPAIR ANY DAMAGE TO BASKET BALL COURT SURFACE

NEW INTAKE AIR WELL WITH GRATING COVER - SEE STRUCT.

NEW ACCESS HATCH AND LADDER SEE DETAIL 2/A2.2

REMOVE EXISTING CONC. PAD AND WALL MOUNTED CONDENSERS

NEW SHAFT WORK SEE DETAIL 5/A2.3

OFFICE 134

OFFICE 130

13 A3.1

PROVIDE NEW OPENINGS IN EXISTING MASONRY WALL INSTALL NEW LINTELS TO SUIT AND INSTALL NEW ALUM WINDOWS - TYP. OF 3

1 MAIN FLOOR PLAN
A2.2 1:100

SHAW STREET

COORDINATE WITH CLIENT FINAL LOCATION OF CONSTRUCTION FENCE AND GATES.

REMOVE AND REPLACE EXISTING CONCRETE ENTRANCE SLAB AND SIDEWALK AS REQUIRED.

EXTENT OF NEW PAVEMENT

TYP. 5000

SPOT ELEVATIONS GIVEN TO ENSURE NEW PAVEMENT IS INSTALLED AT SAME ELEVATIONS AS EXISTING TO PROVIDE POSITIVE DRAINAGE

EXCAVATION LIMITS TO BE DETERMINED BY GENERAL CONTRACTOR

NEW PAVEMENT AND BASE AT PERIMETER - SEE DTL 11/A3.1. HATCHING DENOTES APPROXIMATE EXTENT.

EXISTING PAVEMENT SEE SEPARATE PRICE FOR RECAPPING

CONTRACTOR'S STAGING AREA

EXISTING CONCRETE PAD, SHORE UP AS REQUIRED

ALLOW ACCESS TO LOADING DOCK AS REQUIRED BY CLIENT

EXISTING CONCRETE STAIRS, SHORE UP AS REQUIRED

SERVICE ENTRANCE AT ELEV. 100.000

COORDINATE WORK WITH EXISTING DUCTWORK AT GRADE LEVEL

HIGH POINT OF WEEPING TILE

OFFICE

EXCAVATION LIMITS

COORDINATE WITH CLIENT FINAL LOCATION OF CONSTRUCTION FENCE AND GATES.

EXTENT OF IMPACTED LANDSCAPED AREAS SEE SHEETS L1.0, L2.0 & L3.0.

REMOVE AND REPLACE EXISTING CONCRETE ENTRANCE SLAB, STEP AND SIDEWALK AS REQUIRED. MAINTAIN EXIT AT ALL TIMES

EXCAVATION LIMITS:

BARKER AVEUNE

STORAGE ROOM 127

NEW 900 X 750 FLOOR HATCH AND LADDER SEE DETAIL 8/A3.1

LINE OF CONCRETE FLOOR BEAM

NEW GRAB BARS 2-1200 LONG

DUCT SHAFT

CONTRACTOR TO FINALIZE LOCATION WITH EXISTING MECH. AND ELECT. ITEMS

2 PARTIAL MAIN FLOOR PLAN
A2.2 1:100

Stantec

Stantec Architecture Ltd.
301, 1919 Rose Street
Regina SK Canada
S4P 3P1
Tel. 306.781.6400
Fax. 306.781.6500

Consultants

Legend

Notes

CONTRACTORS SHALL USE A COMBINATION OF EXCAVATION METHODS TO LIMIT THE AMOUNT OF DAMAGE TO THE EXISTING LANDSCAPE AREAS.
REPAIRS TO ALL SURFACES IE: LAWNS, MULCH, PAVEMENT AND SPORTS SURFACE TO BE REPAIRED TO THE ORIGINAL STATE.

REMOVAL OF EARTH FROM WITHIN THE CRAWLSPACE SHALL BE DONE BY A COMBINATION OF SKID STEER, HYDRO VAC AND BY SHOVEL.

EARTH REMOVED FROM THE CRAWLSPACE SHALL BE HAULED OFF SITE.

EXCAVATED MATERIAL FROM THE EXTERIOR OF THE FOUNDATION CAN BE REUSED AS BACKFILL MATERIAL.

Revision	By	Appd.	YY.MM.DD
1 ISSUED FOR TENDER & CONSTRUCTION	RMc	BN	16.04.15

Issued	By	Appd.	YY.MM.DD

File Name:

Dwn.	Chkd.	Dsgn.	YY.MM.DD

Permit-Seal

Bronislaw Nurtgowski
BAA 045 PROFESSIONAL ENGINEER
APRIL 15/2015

Client/Project
GOVERNMENT OF CANADA

UPGRADES TO TBU 61

Regina, Saskatchewan

Title
MAIN FLOOR PLAN

Project No.	Scale	
144401453	1:100	
Drawing No.	Sheet	Revision
A2.2	of	0

ORIGINAL SHEET - ISO A0

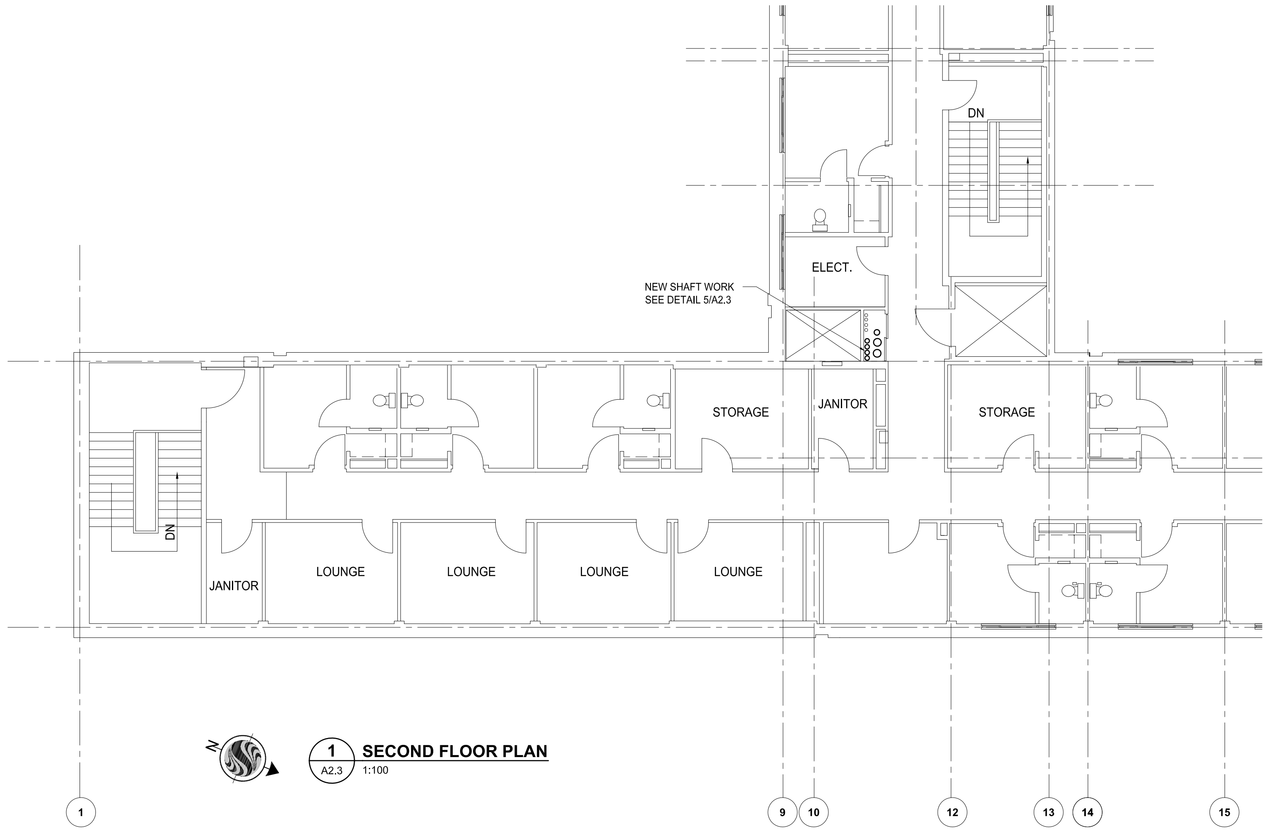

1 / A2.3 **SECOND FLOOR PLAN**
1:100

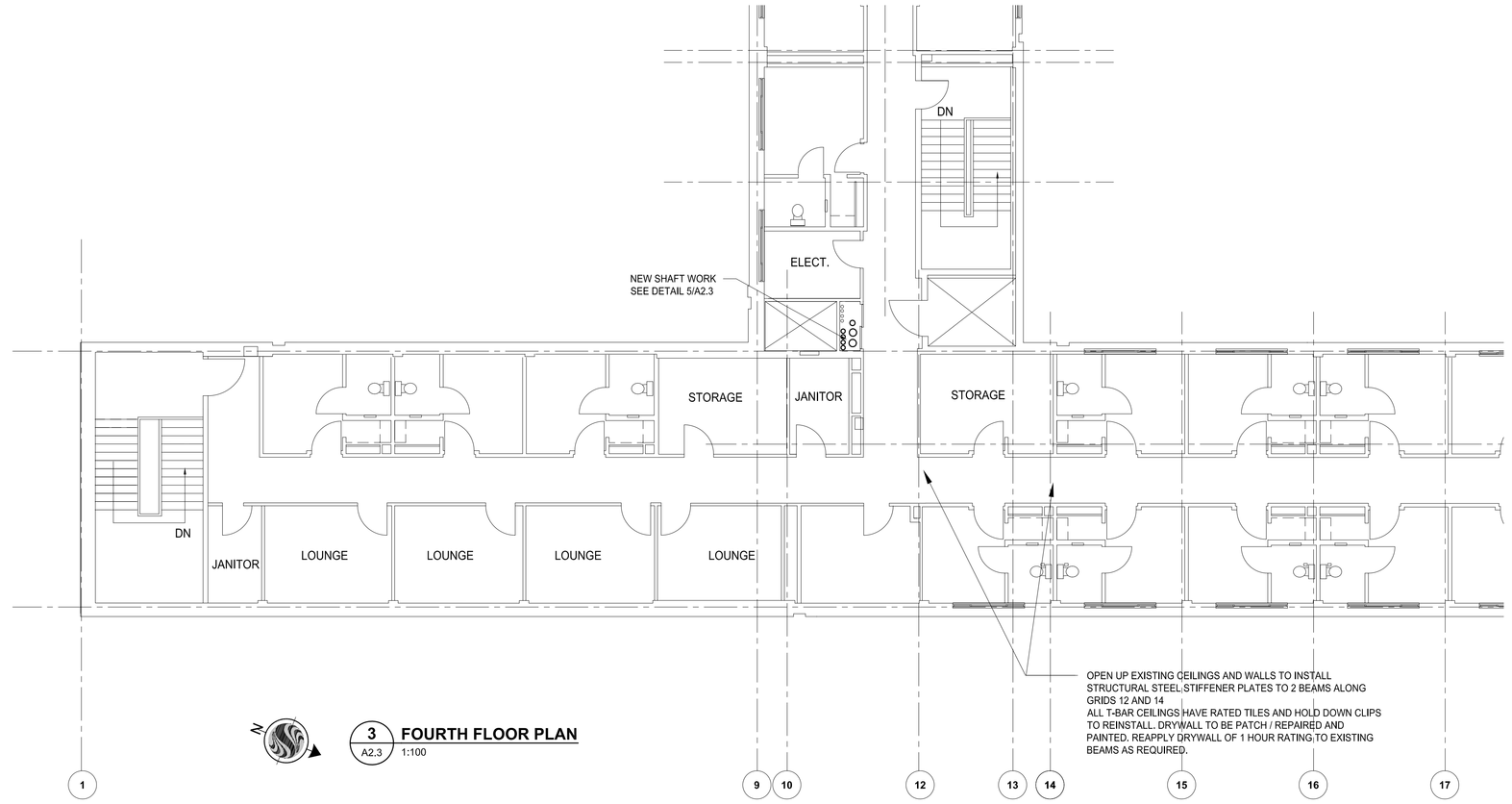

3 / A2.3 **FOURTH FLOOR PLAN**
1:100

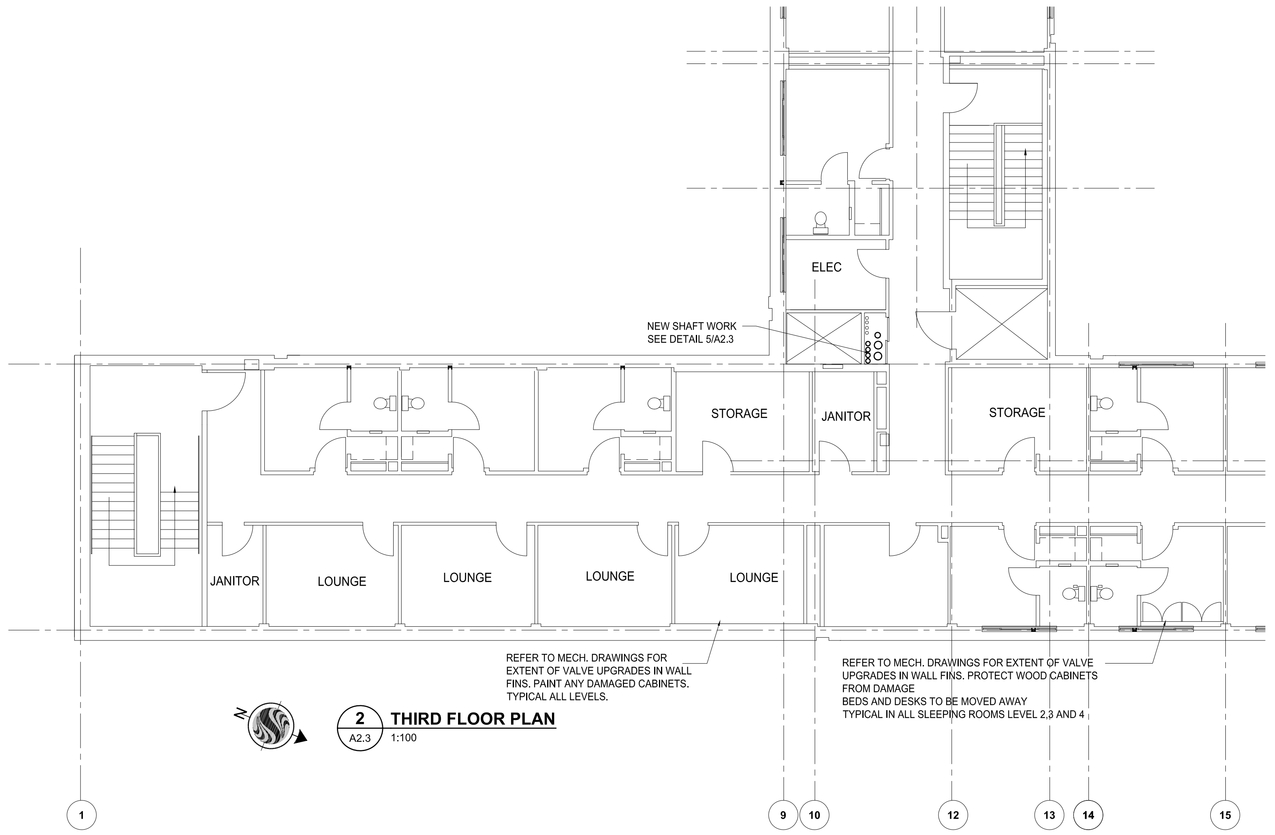

2 / A2.3 **THIRD FLOOR PLAN**
1:100

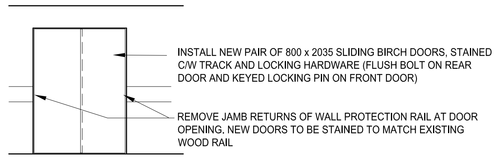

8 / A2.3 **TYPICAL SHAFT ELEVATION**
1:50

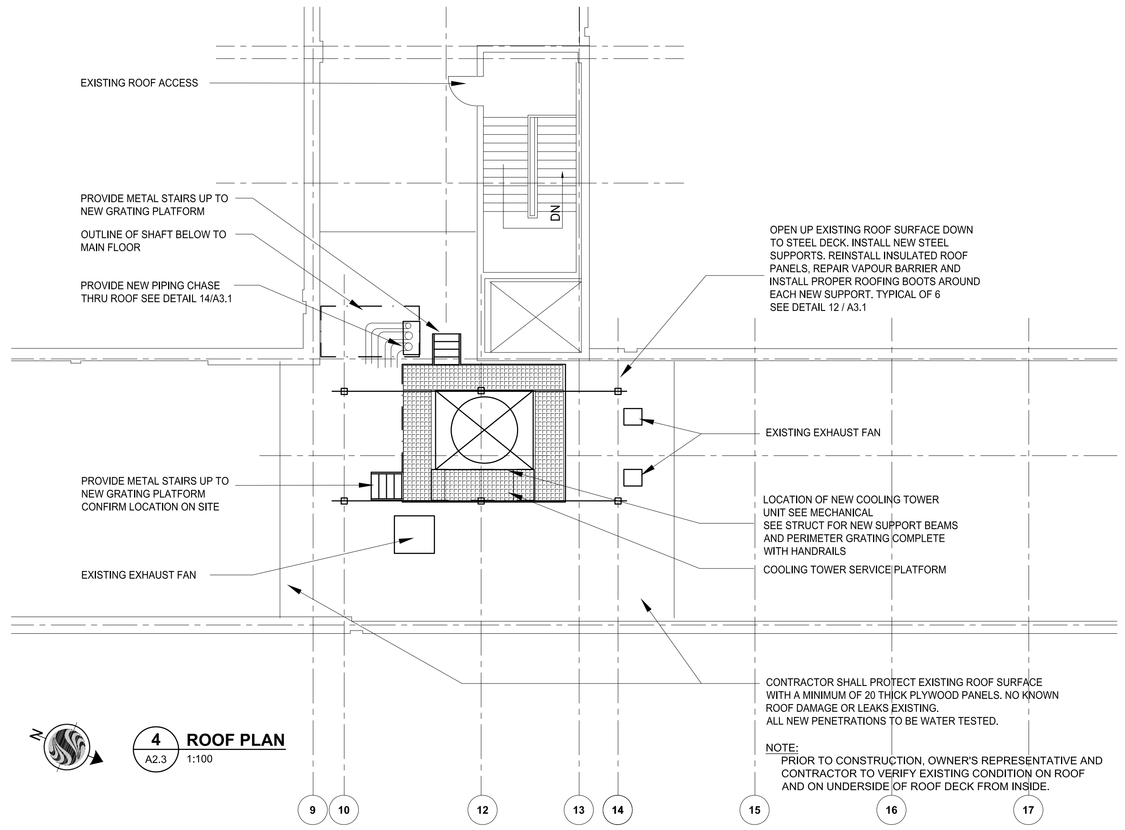

4 / A2.3 **ROOF PLAN**
1:100

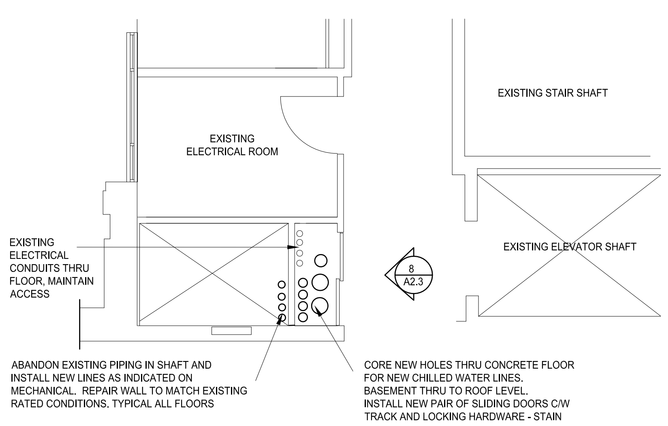

5 / A2.3 **TYPICAL SHAFT PLAN DETAIL**
1:50

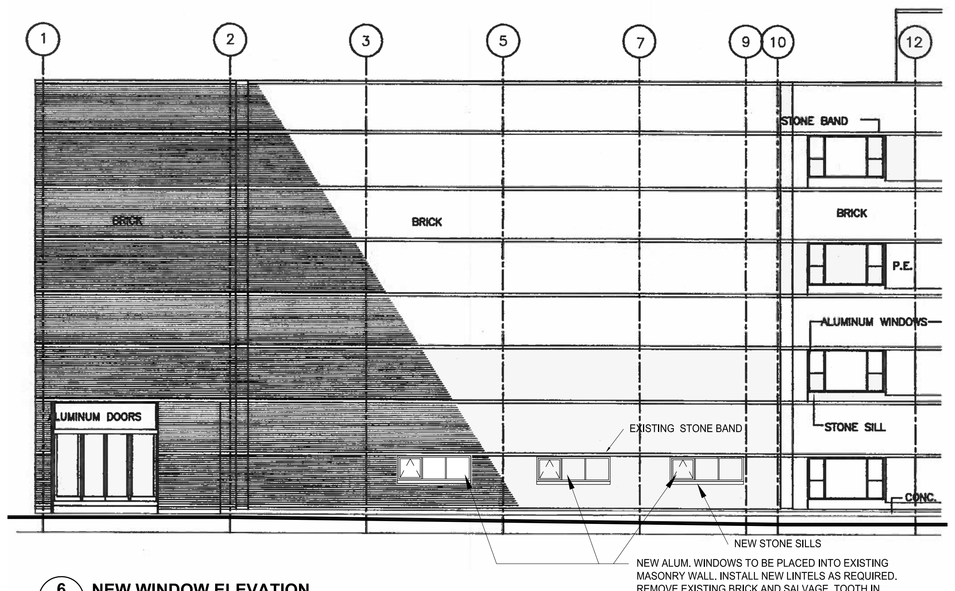

6 / A2.3 **NEW WINDOW ELEVATION**
1:100

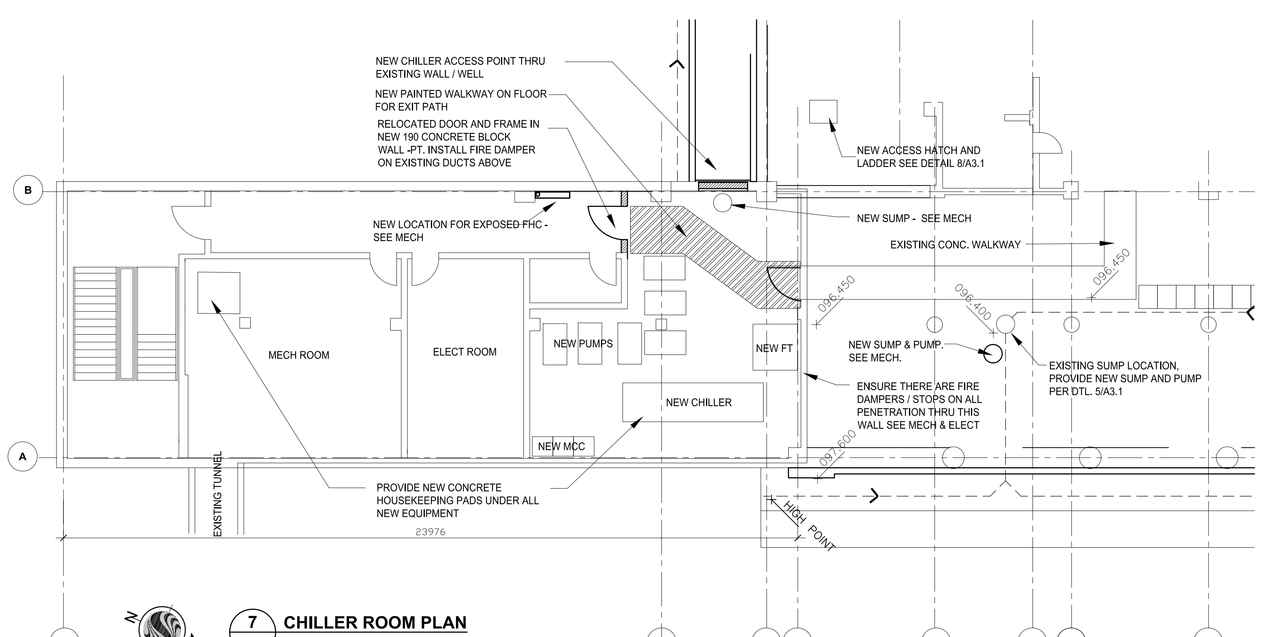

7 / A2.3 **CHILLER ROOM PLAN**
1:100

Stantec

Stantec Architecture Ltd.
301, 1919 Rose Street
Regina SK Canada
S4P 3P1
Tel. 306.781.6400
Fax. 306.781.6500

Consultants

Legend

Notes

Revision	By	Appd.	YY.MM.DD
1. ISSUED FOR TENDER & CONSTRUCTION	RMc	BN	16.04.15

Issued	By	Appd.	YY.MM.DD
File Name:	Dwn.	Chkd.	Dsgn. YY.MM.DD

Permit-Seal

Saskatchewan Association of Architects
Bryanstone Nurkowski
BAA #35 Regina SK
APRIL 15/2016

Client/Project
GOVERNMENT OF CANADA

UPGRADES TO TBU 61

Regina, Saskatchewan

Title
PARTIAL SECOND, THIRD, FOURTH
& ROOF PLANS
CHILLER ROOM PLAN

Project No.	Scale
144401453	AS NOTED

Drawing No.	Sheet	Revision
A2.3	of	0

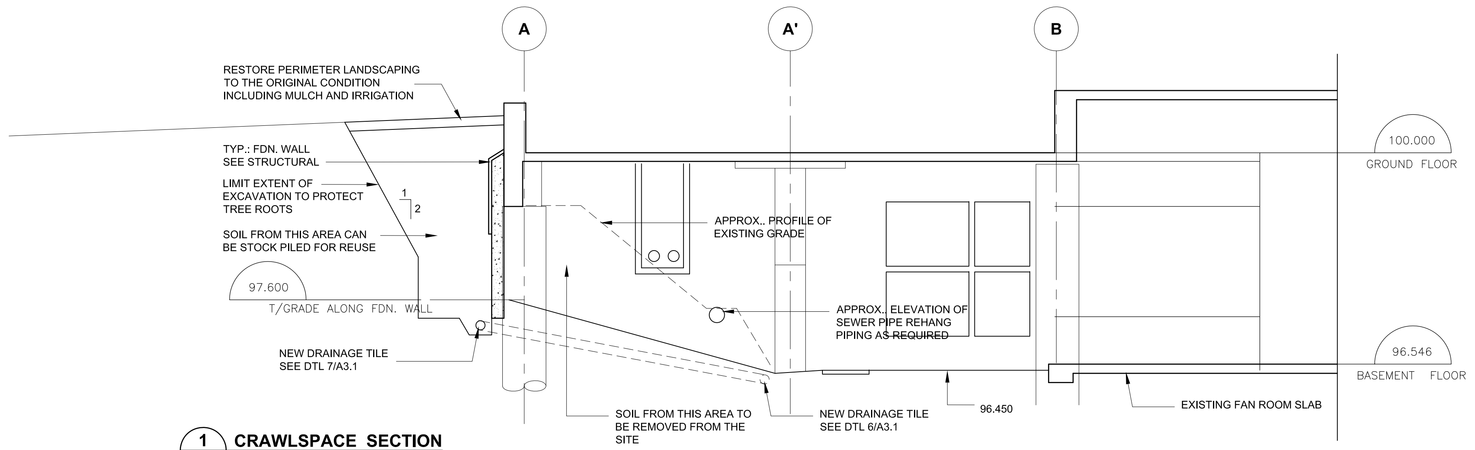

1 CRAWLSPACE SECTION
A3.1 1:50

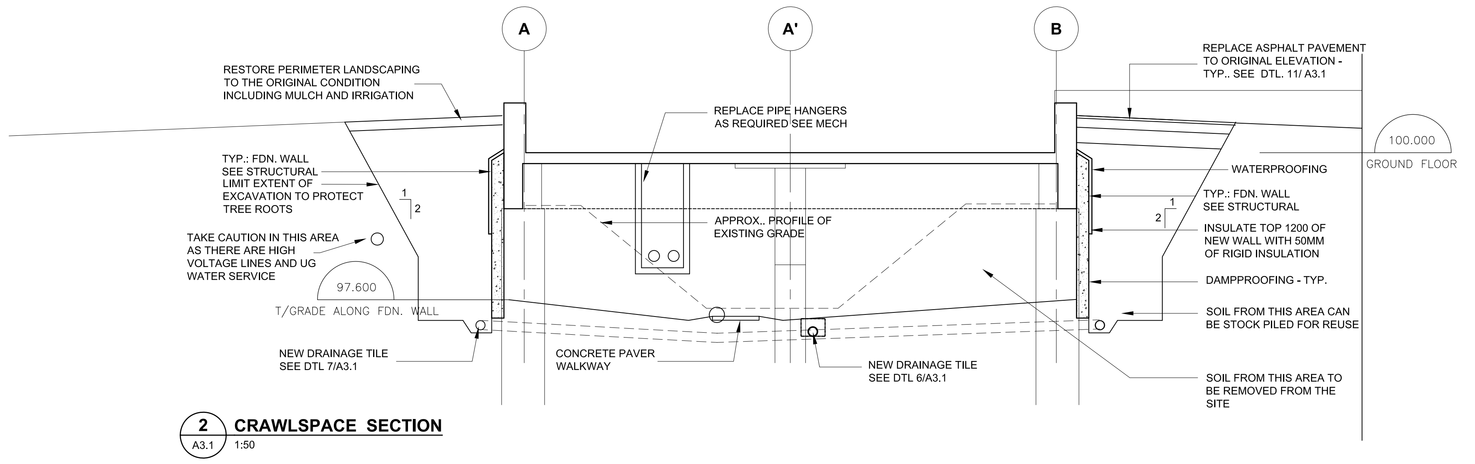

2 CRAWLSPACE SECTION
A3.1 1:50

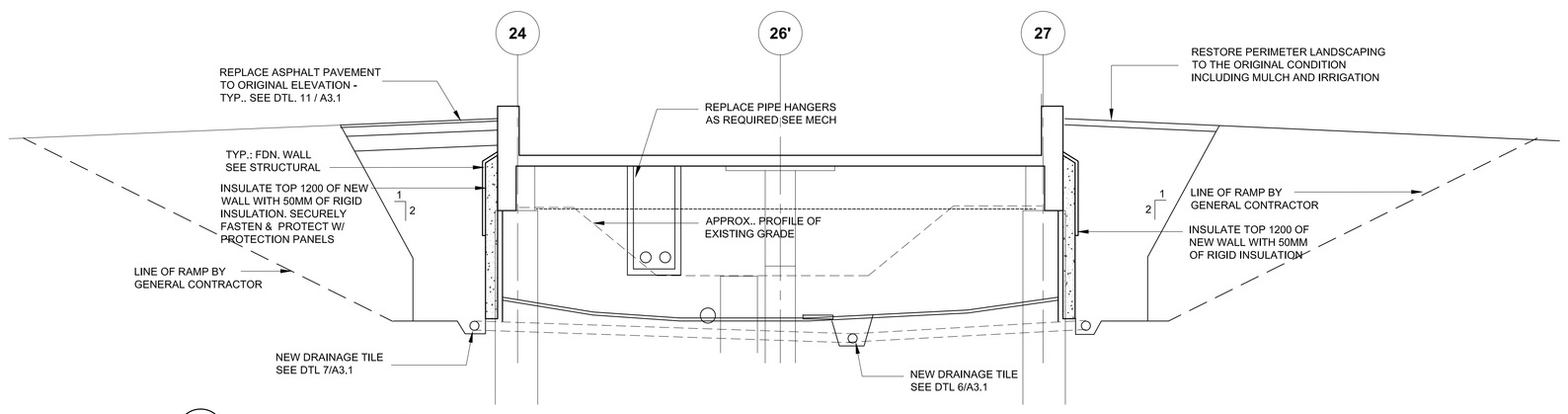

3 CRAWLSPACE SECTION
A3.1 1:50

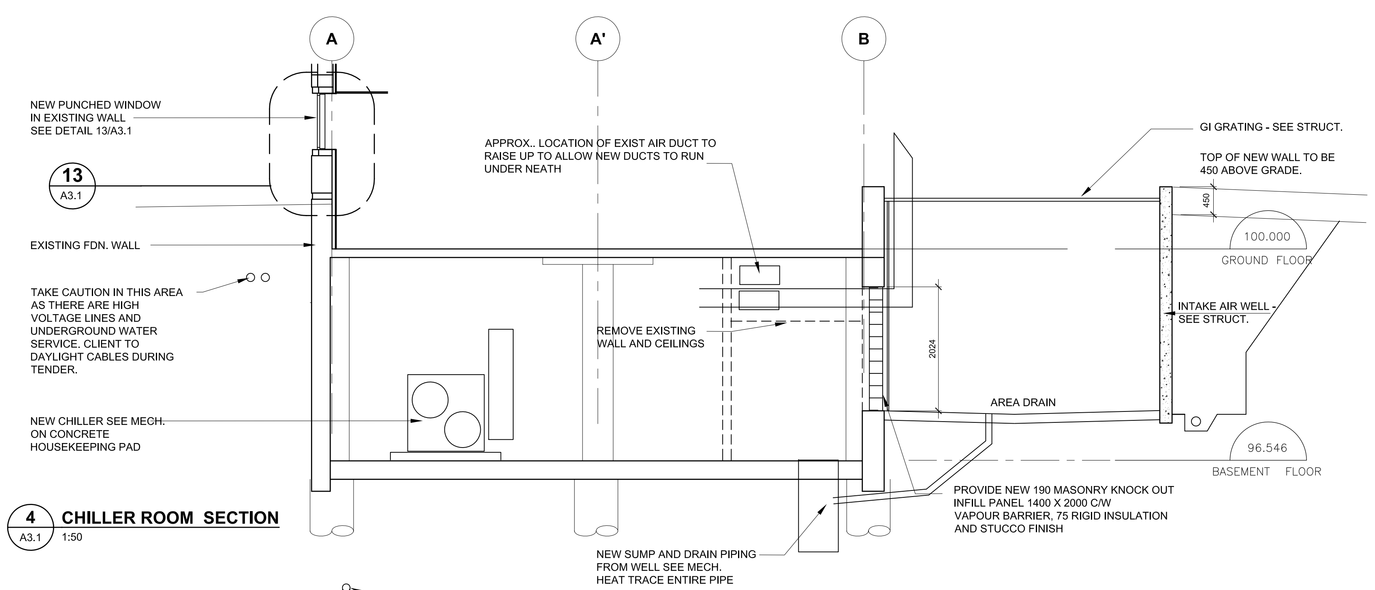

4 CHILLER ROOM SECTION
A3.1 1:50

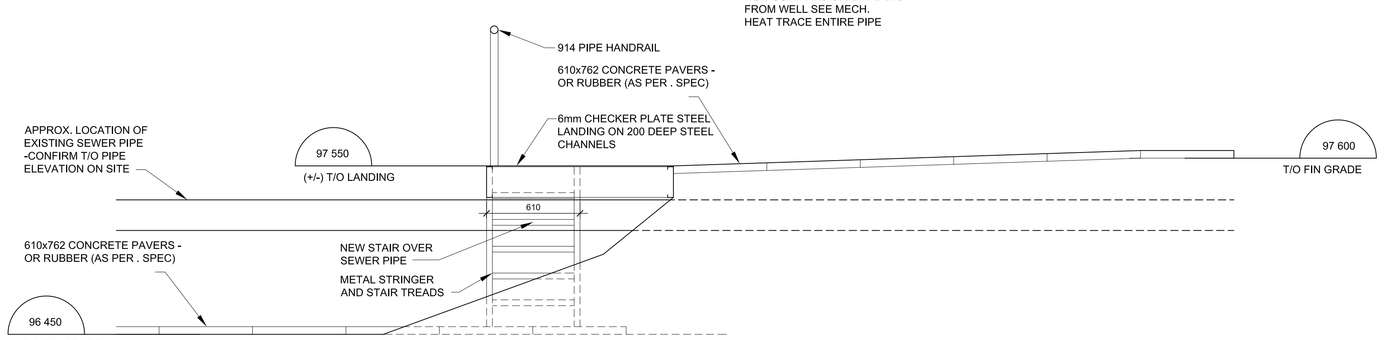

9 STAIR OVER SEWER PIPE DETAIL
A3.1 1:20

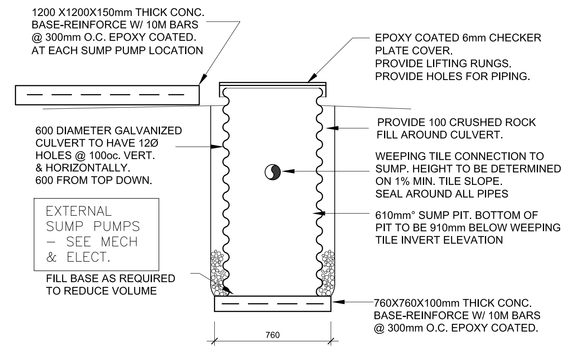

5 SUMP PIT DETAIL
A3.1 1:20

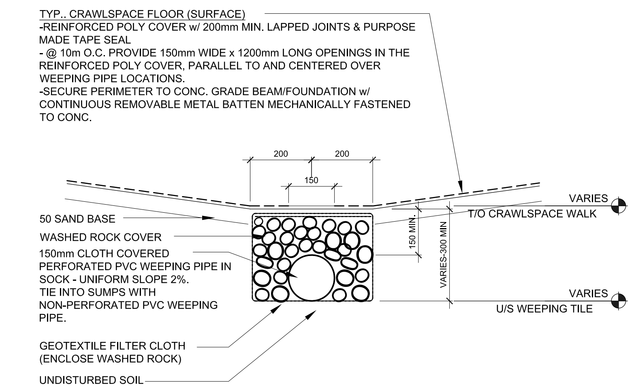

6 WEEPING TILE DETAIL
A3.1 1:10

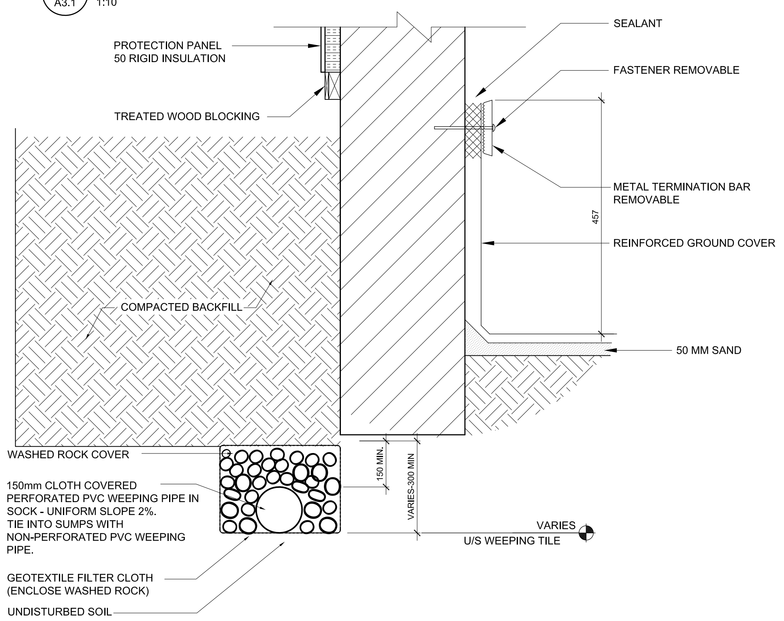

7 REINFORCED VAPOUR RETARDER TERMINATION DETAIL
A3.1 1:10

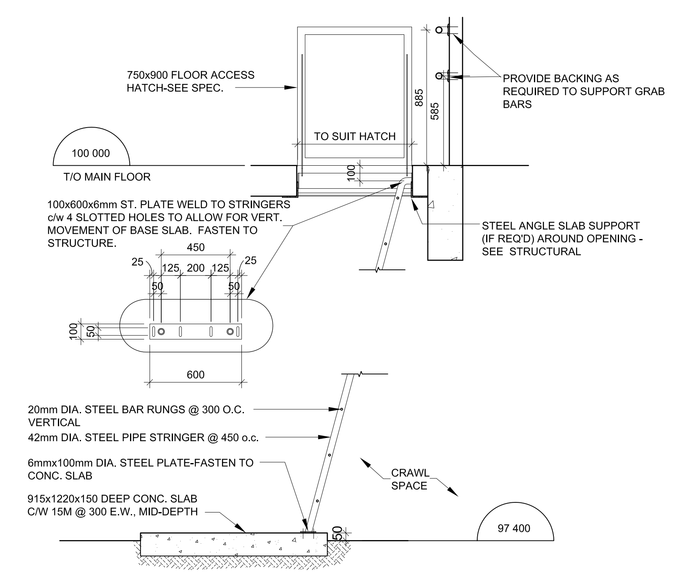

8 FLOOR HATCH AND LADDER DETAIL
A3.1 1:20

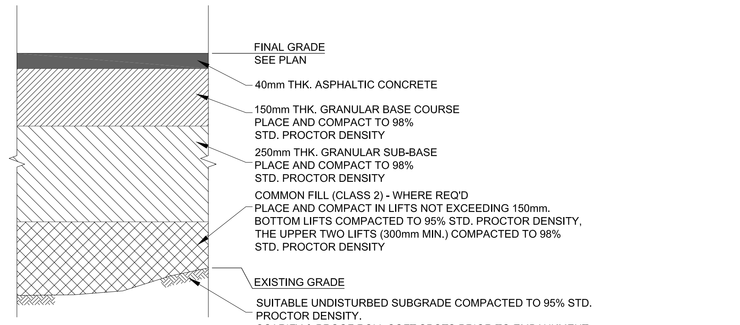

11 TYPICAL PAVEMENT DETAIL
A3.1 1:20

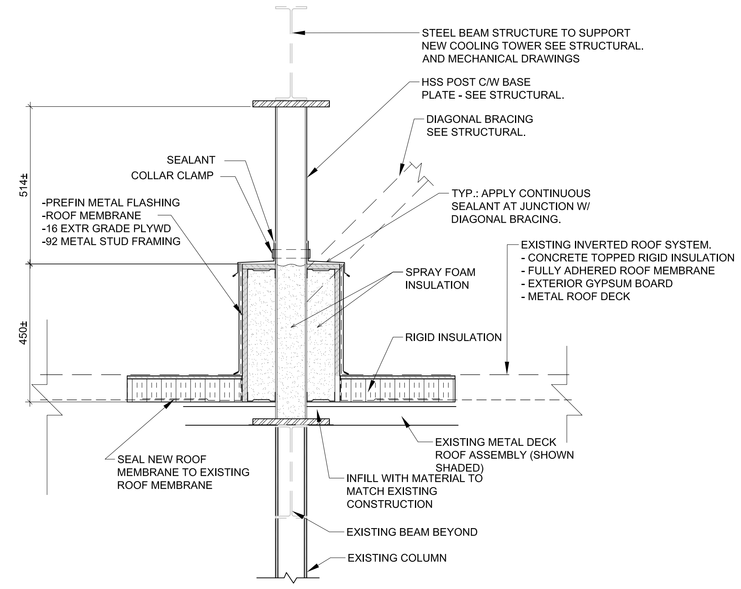

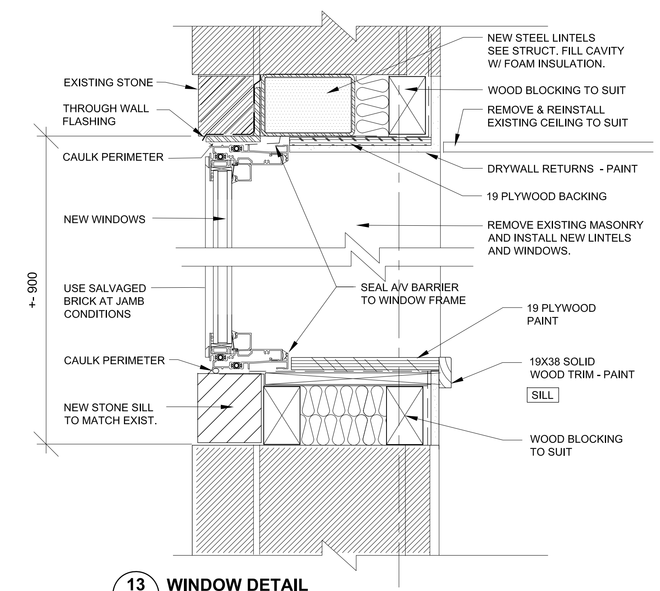

13 WINDOW DETAIL
A3.1 1:5

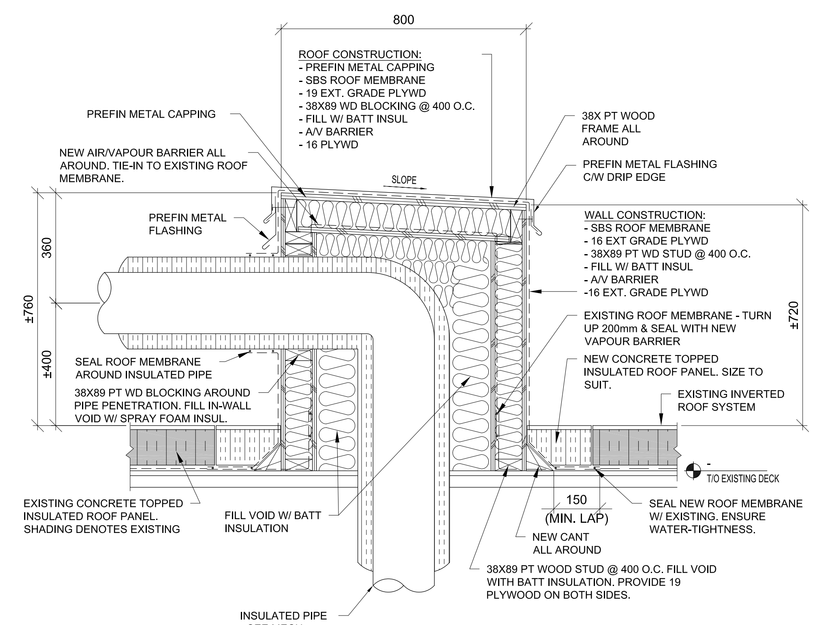

14 ROOF PENETRATION DETAIL
A3.1 1:10

Stantec

Stantec Architecture Ltd.
301, 1919 Rose Street
Regina SK Canada
S4P 3P1
Tel. 306.781.6400
Fax. 306.781.6500

Consultants

Legend

Notes

Revision	By	Appd.	YY.MM.DD
1 ISSUED FOR TENDER & CONSTRUCTION	RMc	BN	16.04.15

Issued	By	Appd.	YY.MM.DD

File Name:

Dwn.	Chkd.	Dsgn.	YY.MM.DD

Permit-Seal

Municipal Inspection Division
Brandessa Nurtgowski
BAA 0153-2015-SK
APPROVED 15/12/15

Client/Project
GOVERNMENT OF CANADA

UPGRADES TO TBU 61

Regina, Saskatchewan

Title
SECTIONS & DETAILS

Project No. 144401453
Scale AS NOTED
Drawing No. A3.1
Sheet of
Revision 0

ORIGINAL SHEET - ISO A0

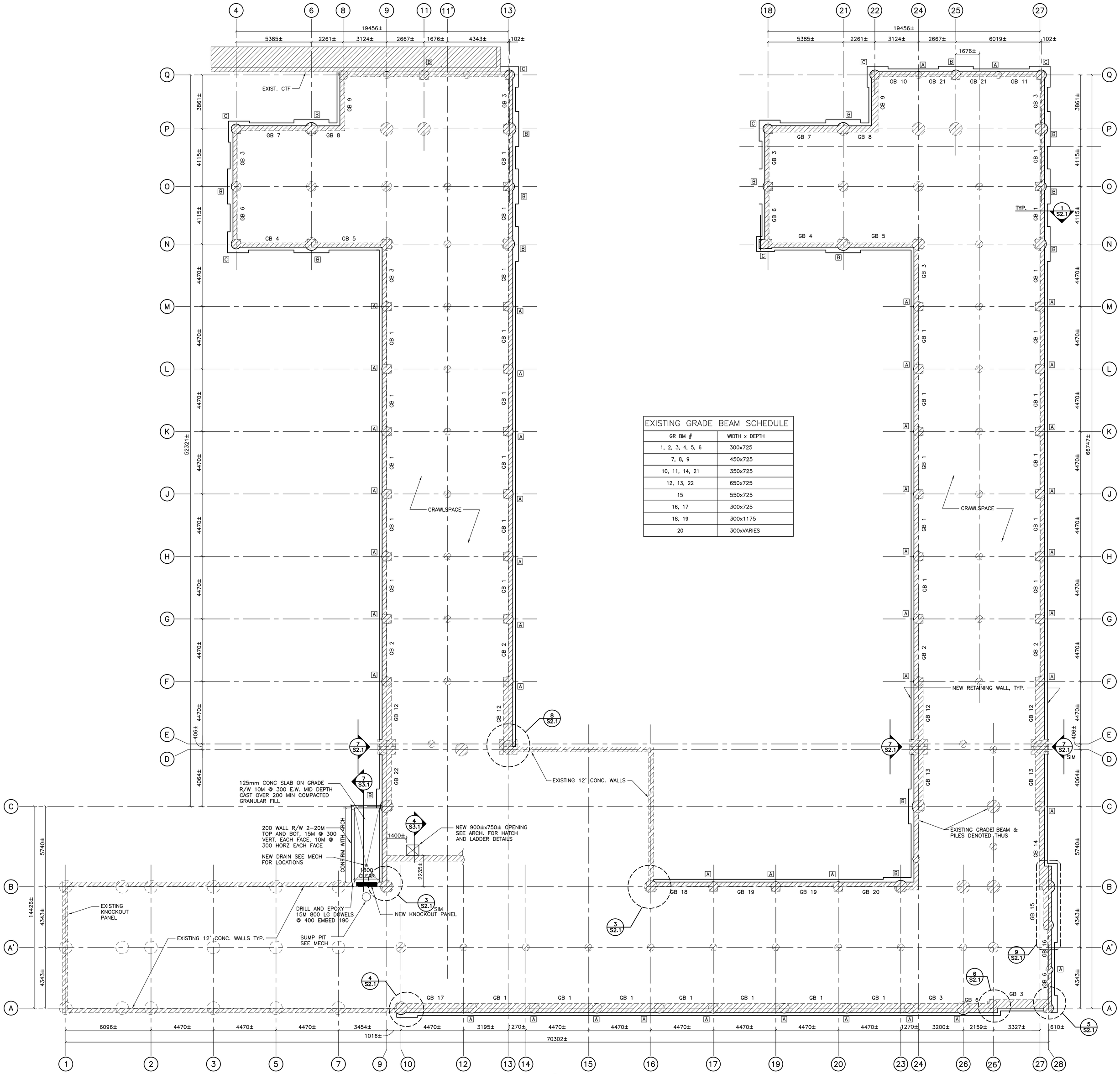

EXISTING GRADE BEAM SCHEDULE	
GR BM #	WIDTH x DEPTH
1, 2, 3, 4, 5, 6	300x725
7, 8, 9	450x725
10, 11, 14, 21	350x725
12, 13, 22	650x725
15	550x725
16, 17	300x725
18, 19	300x1175
20	300xVARIES

1 – CRAWL SPACE PLAN
1:100

Stantec

Stantec Consulting Ltd.
301, 1919 Rose Street
Regina SK Canada
S4P 3P1
Tel. 306.781.6400
Fax. 306.781.6500

Consultants

LEGEND

A DENOTES PILASTER TYPE SEE SECTION 2/S2

DENOTES NEW WALL

DENOTES EXISTING FDN WALL/GR. BM./PILE

GB 1 – DENOTES EXIST. GRADE BEAM TYPE (SEE SCHEDULE)

Legend

NOTES:

1. REFER TO DWG S3.1 FOR TYPICAL REINFORCING DETAILS.

DO NOT SCALE DRAWINGS

Revision	By	Appd.	YY.MM.DD
1 ISSUED FOR TENDER & CONSTRUCTION	RAV	AZZA	16.04.15

Issued

File Name:	Dwn.	Chkd.	Dsgn.	YY.MM.DD

Permit-Seal

PROFESSIONAL ENGINEER A. AZKAR MEMBER 9950 16 04 15 YR. MN. DAY SASKATCHEWAN

Association of Professional Engineers & Geoscientists of Saskatchewan
CERTIFICATE OF AUTHORIZATION
STANTEC CONSULTING LTD.
Number C999
Permission to Consult held by:

Discipline	Sk. Reg. No.	Signature
STRUCT	9950	

Client/Project

GOVERNMENT OF CANADA

UPGRADES TO TBU 61

Regina, Saskatchewan

Title

CRAWLSPACE
RETAINING WALL PLAN

Project No.	Scale
144401453	AS NOTED

Drawing No.	Sheet	Revision
S1.1	of	0

ORIGINAL SHEET - ISO A0

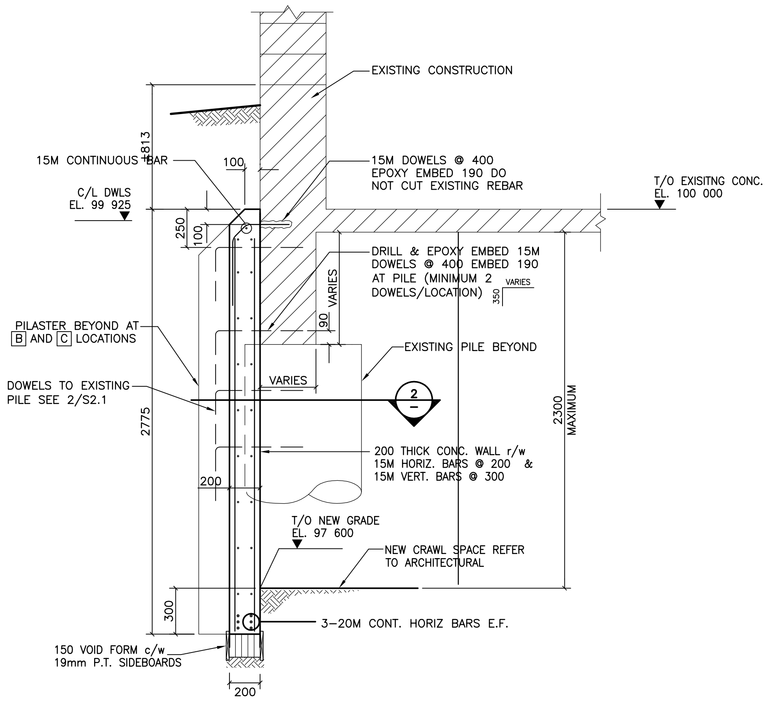

1 / S1.1 TYPICAL RETAINING WALL SECTION
1:20

NOTE:

1. FIRST DOWEL IN PILE TO START @ 300 FROM THE BOTTOM OF THE GRADE BEAM, TYP.

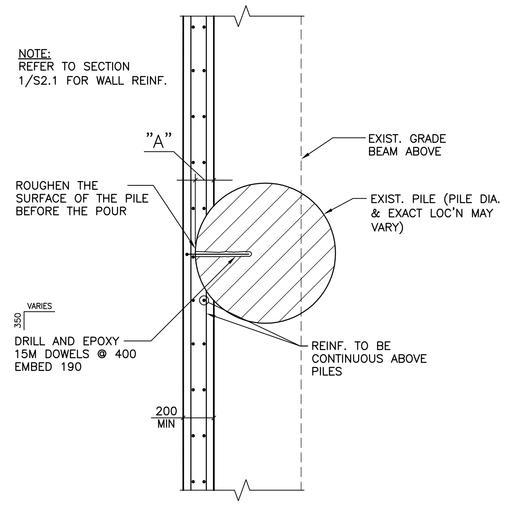

TYPE A
"A" ≤ 100mm

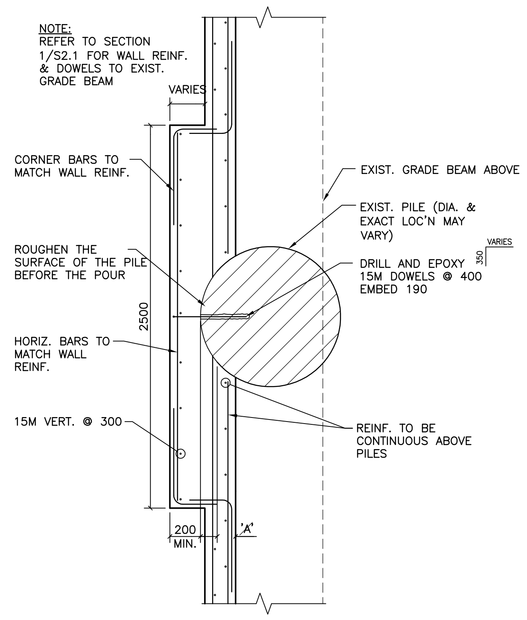

TYPE B
100mm < "A" < 230mm

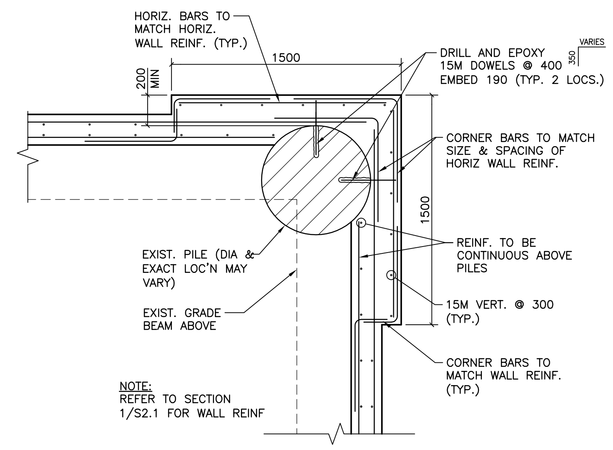

TYPE C

2 / S1.1 TYPICAL PILASTER DETAILS
1:20

NOTE:

1. HAMMERDRILL FOR DOWEL LOCATIONS BEFORE INSTALLATION – DO NOT CUT REBARS
2. IN THE EVENT EXISTING REBAR OBSTRUCTS PATH OF PREDRILLED HOLE, CEASE DRILLING AND ATTEMPT AN ALTERNATE LOCATION WITHIN 50mm OF FIRST ATTEMPTED HOLE.
3. PATCH THE REDUNDANT HOLE (SEE SPEC'S)
4. CONFIRM PILE 'A' DIMENSION PRIOR TO FABRICATION (CONFIRM ON SITE)

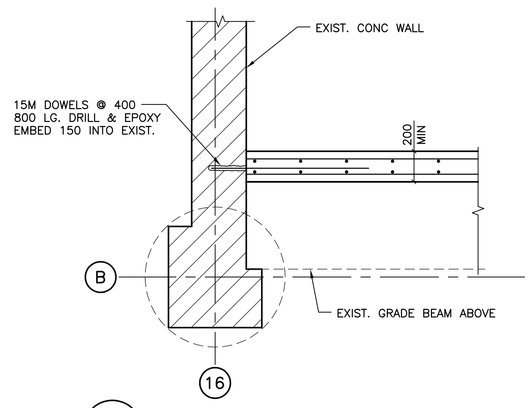

3 / S1.1 PLAN DETAIL
1:20

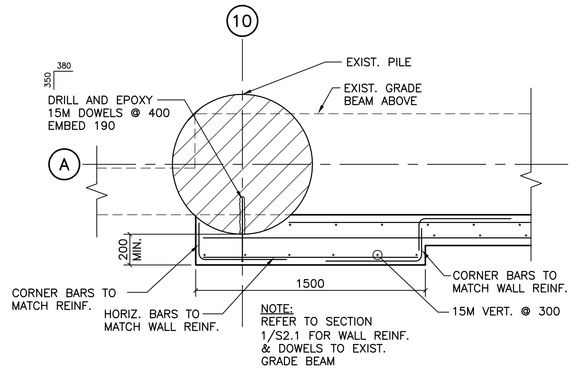

4 / S1.1 DETAIL
1:20

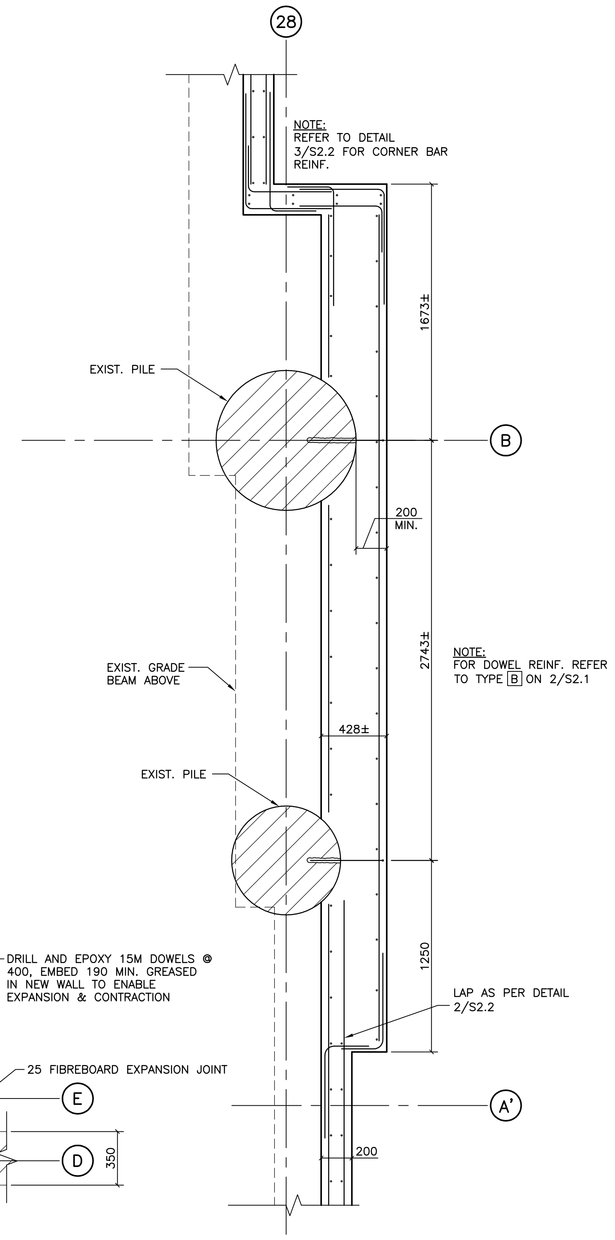

9 / S1.1 DETAIL
1:20

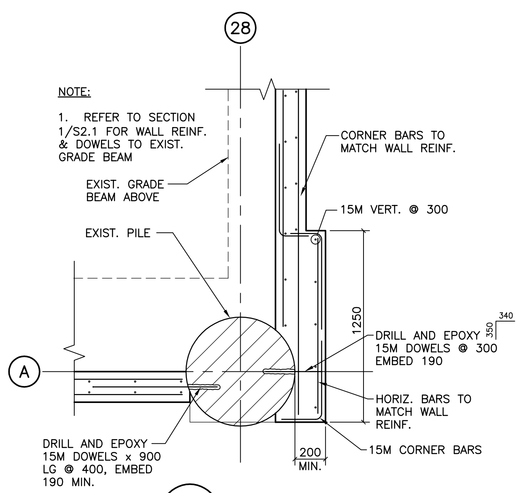

5 / S1.1 DETAIL
1:20

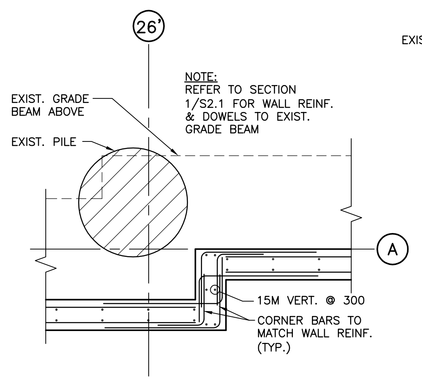

6 / S1.1 DETAIL
1:20

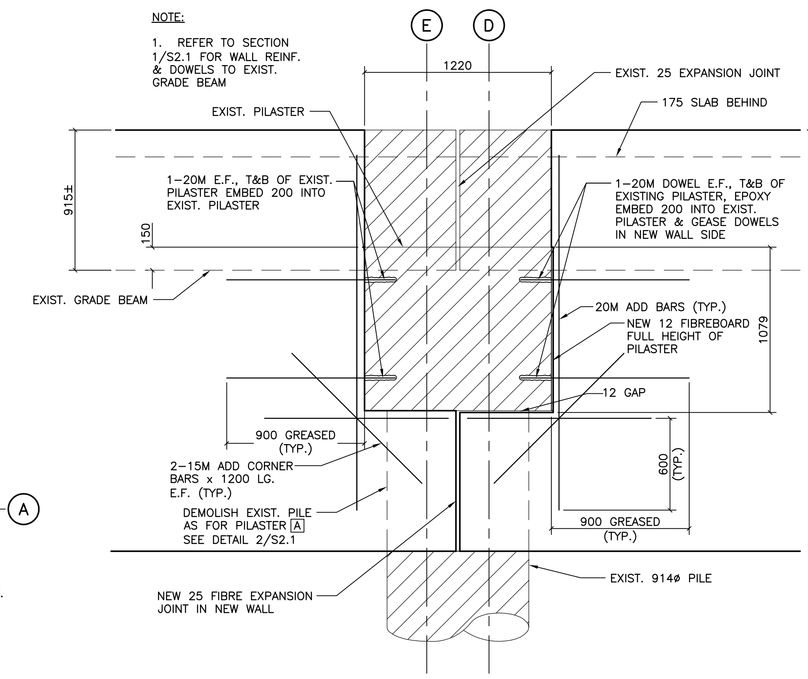

7 / S1.1 ELEVATION DETAIL
1:20

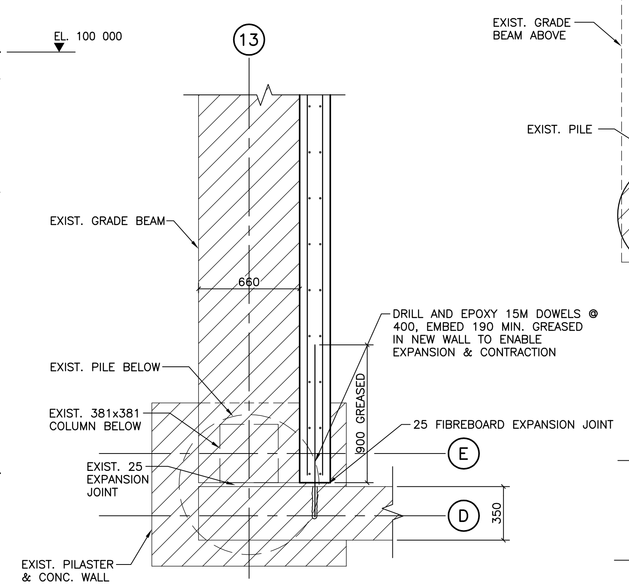

8 / S1.1 DETAIL
1:20

Stantec

Stantec Consulting Ltd.
301, 1919 Rose Street
Regina SK Canada
S4P 3P1
Tel. 306.781.6400
Fax. 306.781.6500

Consultants

Legend

Revision	By	Appd.	YY.MM.DD
1 ISSUED FOR TENDER & CONSTRUCTION	RAV	AJZA	16.04.15

Issued	By	Appd.	YY.MM.DD
File Name:	Dwn.	Chkd.	Dsgn. YY.MM.DD

Permit-Seal

PROFESSIONAL ENGINEER
A. ASKAR
MEMBER 9950
16.04.15
SASKATCHEWAN

Association of Professional Engineers & Geoscientists of Saskatchewan
CERTIFICATE OF AUTHORIZATION
STANTEC CONSULTING LTD.
Number C999
Permission to Consult held by:

Discipline	Sk. Reg. No.	Signature
STRUCT	9950	

Client/Project
GOVERNMENT OF CANADA

UPGRADES TO TBU 61

Regina, Saskatchewan

Title
CRAWLSPACE
SECTIONS & DETAILS

Project No.	Scale
144401453	AS NOTED

Drawing No.	Sheet	Revision
S2.1	of	0

ORIGINAL SHEET - ISO A0

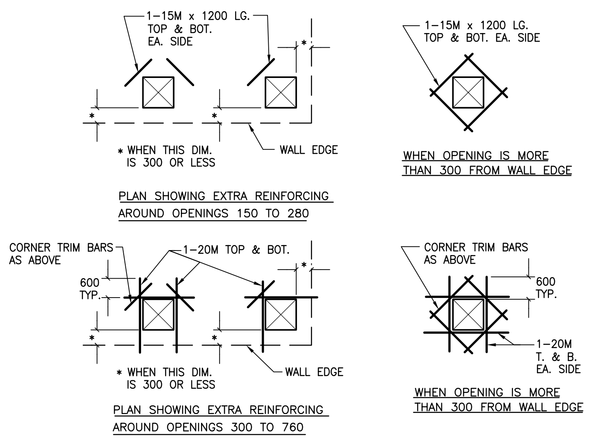

NOTES:
1. NUMBER OF REINF. BARS CUT TO BE KEPT AT A MINIMUM. DEFLECT AS MANY BARS AS POSSIBLE AROUND OPENING.
2. REINF. BARS TO BE KEPT 50mm CLEAR OF OPENING.
3. CIRCULAR OPENINGS TO BE TREATED IN THE SAME MANNER AS RECTANGULAR OPENINGS.
4. WHERE REINF. SHOWN ON A DWG. DIFFERS FROM THIS STANDARD, THEN THE DWG. HAS PRIORITY.
5. PROVIDE STD HOOKS ON ADD'L. REINF. WHERE IT IS NOT POSSIBLE TO INSTALL REINF. WITH REQUIRED LENGTH.

1 – ADDITIONAL REINF. AROUND OPNGS. IN CONC. RETAINING WALLS
N.T.S.

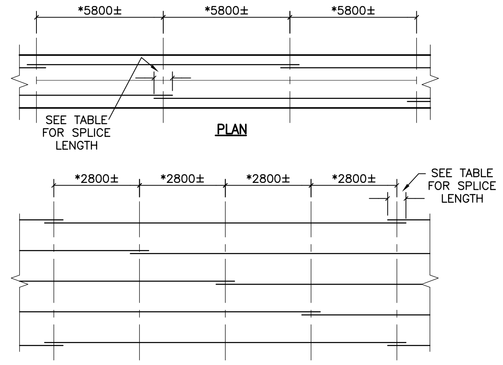

DEVELOPMENT LENGTHS TABLE			
LOCATION	BAR SIZE	15M	20M
HORIZONTAL BARS	ALL SPLICES	900	1190
VERTICAL BARS	ALL SPLICES	690	920

NOTES:
1. IF BAR SIZES ARE MIXED AT THE SPLICE LOCATION USE THE LARGER BAR SIZE FOR PROPORTIONING THE SPLICE SIZE.
2. FOR ALL SPLICES NOT SHOWN ABOVE USE A CLASS B SPLICE.
3. REFER TO ABOVE PLAN & ELEVATION FOR SPLICE LOCATIONS AT WALL CONNECTION JOINTS, SLABS TO HAVE ALTERNATING SPLICE BARS LOCATED AT JOINTS AS SHOWN IN DETAILS.
4. SPLICES IN HORIZONTAL WALL REINFORCING SHALL BE STAGGERED SO THAT A MINIMUM DISTANCE OF 500mm IS OBTAINED BETWEEN THE END OF THE SPLICE LAP AND THE BEGINNING OF THE NEAREST ADJACENT SPLICE LAP.

2 – TYP. WALL REINF. SPLICE DETAILS
1:20

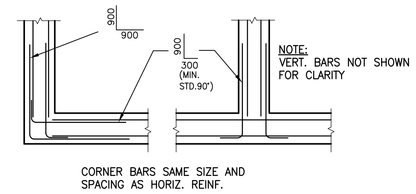

3 – TYP. CORNER BAR DETAIL
N.T.S.

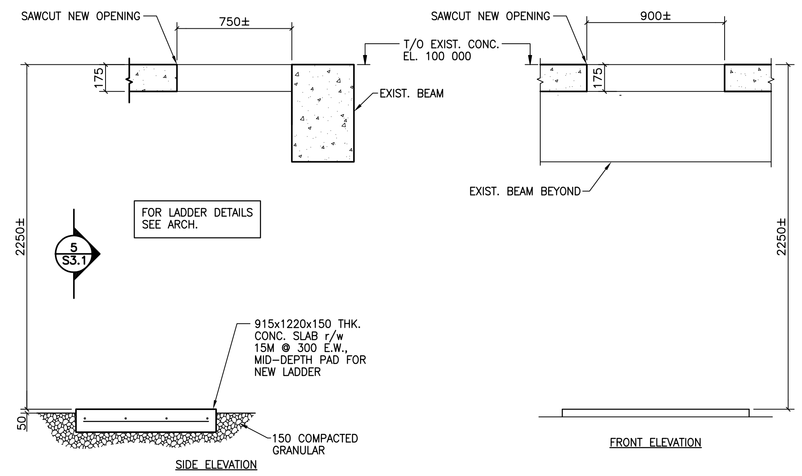

4 S1.1 – SECTION
1:20

5 S3.1 – ELEVATION
1:20

NOTE:
1. LOCATION OF CONCRETE PAD & EXACT DIMENSIONS OF OPENING TO BE CONFIRMED BY SUPPLIER

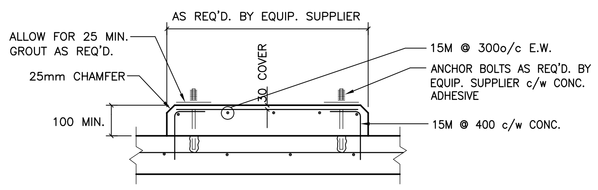

6 – EQUIPMENT PAD DETAIL
N.T.S.

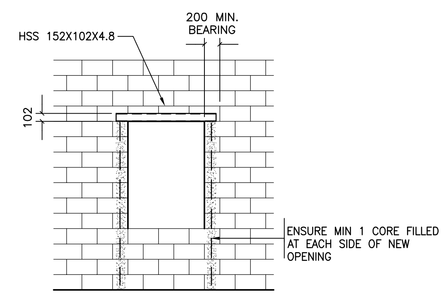

9 – TYP.WINDOW OPENING IN EXISTING BLOCK
N.T.S.

NOTE:
1. ALL CONCRETE FILL SHALL BE 20MPa STRENGTH.
2. REFER TO ARCH FOR NEW WINDOW LOCATIONS

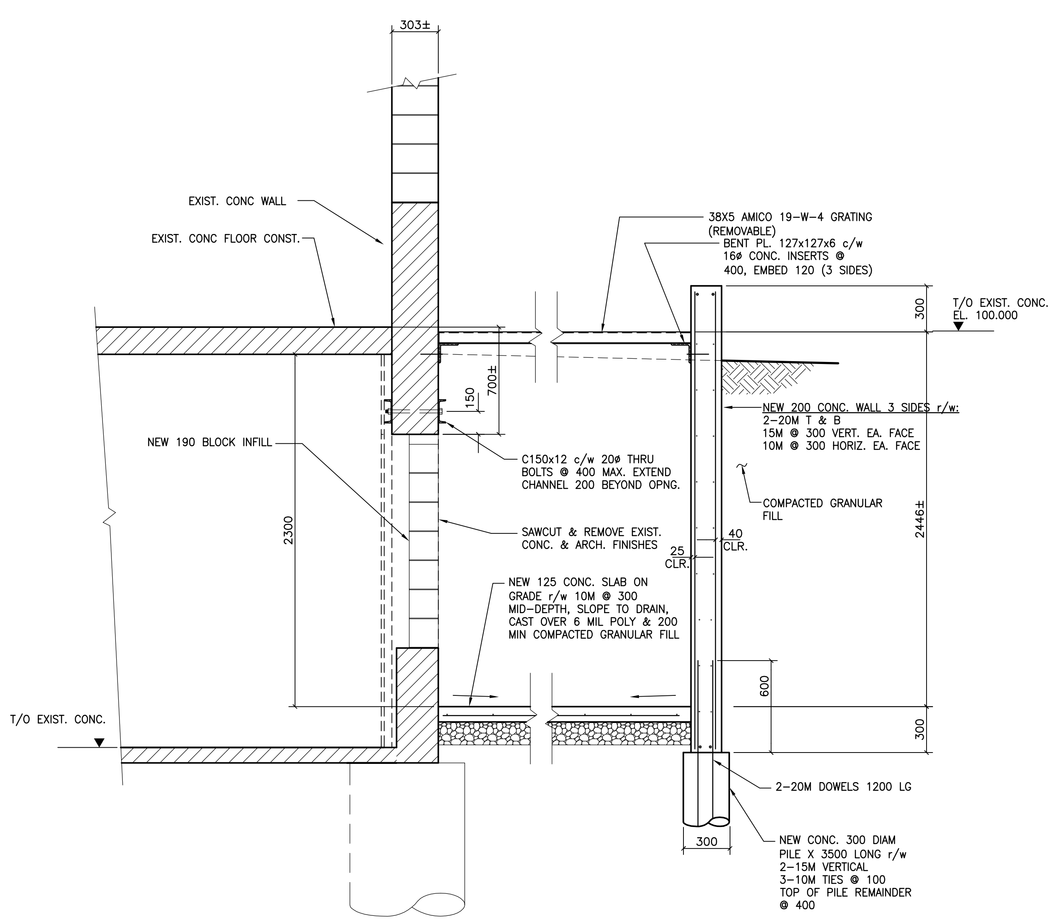

7 S1.1 – SECTION
1:20

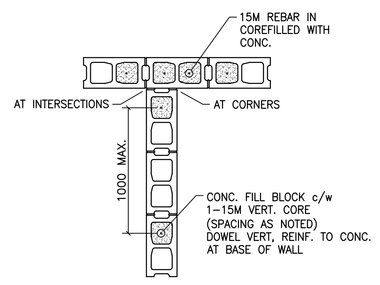

TYP. VERT. REINF. AT ALL MASONRY WALLS

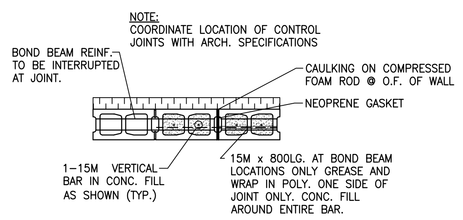

TYP. CONC. BLOCK WALL CONTROL JOINT (C.J.)

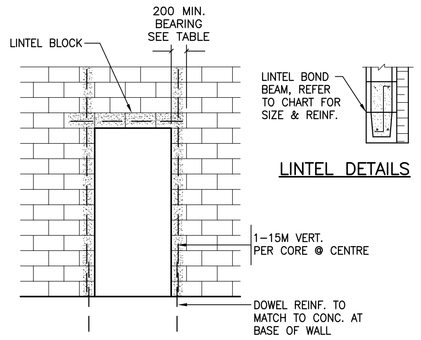

TYP. ELEVATION AT OPENINGS

LINTEL SIZES		
OPENING SIZE (mm)	LOADBEARING CONCRETE BLOCK BEAM REINF.	COREFILLS
0 TO 1200	400 HIGH r/w 2-15M BOT. 10M STIRR. @ 150	2
1200 TO 2400	600 HIGH r/w 2-20M BOT. 10M STIRR. @ 150	3
2400 TO 3600	800 HIGH r/w 2-25M BOT. 2-15M @ MID-HEIGHT 10M STIRR. @ 150	4
OPENING SIZE (mm)	NON-LOADBEARING CONCRETE BLOCK BEAM REINF.	COREFILLS
0 TO 1200	200 HIGH r/w 1-15M BOT.	1
1200 TO 2400	400 HIGH r/w 2-15M	2

NOTE:
1. ALL CONCRETE FILL SHALL BE 20MPa STRENGTH.
2. EXTEND BOND BEAM PAST THE OPENING ACCORDING TO COREFILLS SHOWN IN THE TABLE BELOW.

8 – TYP. CONCRETE BLOCK REINFORCEMENT DETAILS
N.T.S.

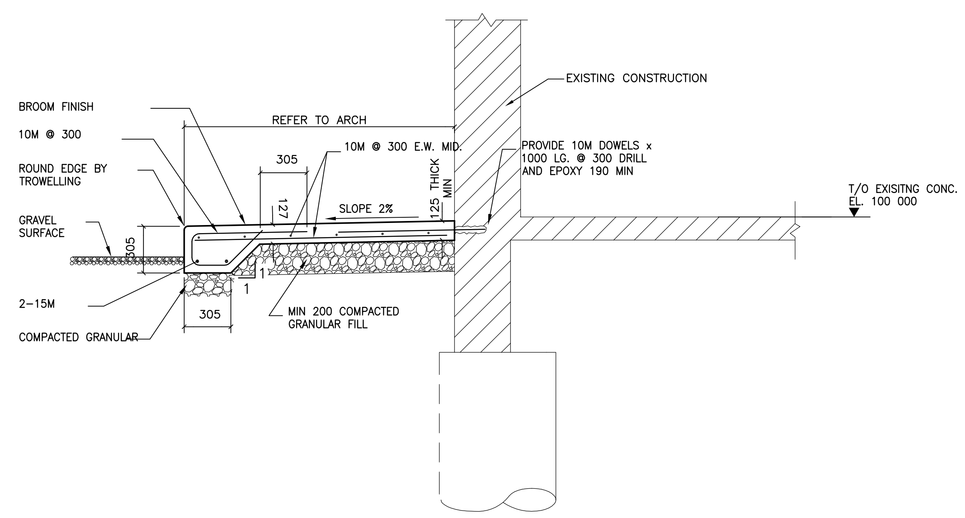

10 – EXTERIOR SLAB/GRADE BEAM @ DOORWAY SECTION
1:20

GENERAL NOTES
.1 READ THE STRUCTURAL DRAWINGS IN CONJUNCTION WITH ALL OTHER PERTINENT CONTRACT DOCUMENTS.
.2 ALL DIMENSIONS ARE IN MILLIMETERS UNLESS NOTED. THE CONTRACTOR SHALL VERIFY DIMENSIONS BEFORE CONSTRUCTION AND REPORT DISCREPANCIES BEFORE PROCEEDING WITH THE WORK. DO NOT SCALE DRAWINGS.
.3 THE DESIGN AND CONSTRUCTION SHALL BE IN ACCORDANCE WITH THE NATIONAL BUILDING CODE OF CANADA AND REFERENCED STANDARDS THEREIN.
.4 NOTIFY THE STRUCTURAL ENGINEER 24 HOURS IN ADVANCE FOR INSPECTION.
.5 DRAWINGS SHOW COMPLETED STRUCTURES ONLY. PROVIDE TEMPORARY BRACING FOR CONSTRUCTION LOADING CONDITIONS AND STABILITY OF THE STRUCTURE DURING CONSTRUCTION. CONSTRUCTION LOADS SHALL NOT EXCEED THE DESIGN LOADS.
.6 CONTRACTOR TO VERIFY LOCATION OF UNDERGROUND SERVICES AND BE RESPONSIBLE FOR DISRUPTIONS.
.7 ALL EXISTING CONSTRUCTION ALTERED OR DAMAGED DURING COURSE OF WORK TO BE MADE GOOD TO MATCH.

EXCAVATION AND BACKFILL AS REQUIRED SEE SPECIFICATIONS

CONCRETE NOTES
.1 PROVIDE CONCRETE AND PERFORM WORK TO CSA CAN3-A23.1-04. THE CONTRACTOR SHALL HAVE A COPY OF THIS STANDARD ON SITE AT ALL TIMES.
.2 TEST CONCRETE IN ACCORDANCE WITH CSA CAN3-A23.2-04. PROVIDE 28 DAY COMPRESSIVE TEST RESULTS, AIR AND SLUMP RESULTS ON CONCRETE FOR EVERY 50m3 OR EACH DAY CONCRETE IS PLACED. SUBMIT RESULTS TO THE CONSULTANT.
.3 CONCRETE REQUIREMENTS:

TYPE	LOCATION	28 DAY STRENGTH fc (MPa)	CEMENT TYPE	CLASS OF EXPOSURE
1	RET. WALLS	30	HS	F-2
2	PILES	30	HS	S-2
3	SLABS	30	HS	F-2
4	EXTERIOR SLABS	35	HS	F-2

.4 ALL CONCRETE SHALL BE NORMAL WEIGHT 2400 KG/M3 UNLESS NOTED.
.5 MINIMUM CEMENT CONTENT FOR TYPE HS CEMENT TO BE 300 KG/CUBIC METER.
.6 HS – HIGH SULFATE
.7 VOID FORM: 150 THICK CARDBOARD HONEYCOMB, TOP SHEET TO BE 5 MM THICK PLYWOOD. COVER AND WRAP EDGES WITH 6 MIL POLY. PROVIDE LEVELLED SAND BASE UNDER VOID FORM. PROVIDE UNDER GRADE BEAMS, WALLS, AND PILE CAPS.
.8 ADHESIVE ANCHORS: HILTI HIT BOLT OR APPROVED EQUAL.
.9 GROUT: TO BE NON-SHRINK, NON-METALLIC GROUT. CLEAN CONTROL JOINTS PRIOR TO PLACING GROUT.

REINFORCING STEEL NOTES
.1 DEFORMED BARS CONFORMING TO CSA G30.18M GRADE 400. TIES AND STIRRUPS TO CSA G30.18M GRADE 300 OR 400.
.2 REINFORCING WORK SHALL BE IN ACCORDANCE WITH CSA CAN3-A23.1 AND CSA CAN3-A23.3.
.3 REINFORCING STEEL SHALL BE DETAILED IN ACCORDANCE WITH THE LATEST EDITION OF THE ACI DETAILING MANUAL OR THE REINFORCING STEEL INSTITUTE OF CANADA DETAILING MANUAL.
.4 REINFORCING TO BE CONTINUOUS UNLESS NOTED. LAP TOP BARS AT MIDSPAN, BOTTOM BARS AT SUPPORTS. MINIMUM LAP FOR 10 M BARS TO BE 450 MM. MINIMUM LAPS FOR OTHER BARS TO BE CLASS B TENSION SPLICES. WHERE REINFORCEMENT LAPS ARE REQUIRED IN ADJACENT BARS, STAGGER LAPS MINIMUM 1200 UNLESS NOTED OTHERWISE.
.5 CHAIR SLAB REINFORCING NOT FURTHER THAN 1.0 METRE IN EITHER DIRECTION. SUPPLY SUPPORT BARS, CHAIRS, AND CARRIERS AS NECESSARY.CE
.6 DOWELS AND ANCHOR BOLTS SHALL BE SECURED IN POSITION BY MEANS OF TEMPLATES BEFORE CONCRETE IS POURED.
.7 SUBMIT SHOP DRAWINGS FOR REVIEW PRIOR TO FABRICATION.

CLEAR COVER FOR REINFORCEMENT:
SURFACES CAST AGAINST EARTH = 75MM
SLABS EXPOSED TO EARTH = 50MM
ALL OTHER = 25MM

STRUCTURAL STEEL NOTES
.1 FABRICATE AND ERECT STRUCTURAL STEEL TO CAN/CSA S16.1.
.2 PROVIDE STRUCTURAL STEEL TO CSA G40.21 WITH THE FOLLOWING GRADES:

SECTION TYPE	GRADE OF STEEL (MPA)
WIDE FLANGE BEAMS	350W
CHANNELS AND ANGLES	300W
HSS SECTIONS (CLASS C)	350W

.3 FABRICATOR TO BE CERTIFIED AS A DIVISION 1 or 2 COMPANY UNDER CSA W47.1. SUBMIT SHOP DRAWINGS FOR REVIEW PRIOR TO FABRICATION.
.4 DIMENSIONS SHOWN ARE TO CENTER LINES OF SECTIONS AND TO BACK OF CHANNELS OR ANGLES. ELEVATIONS SHOWN ARE TO TOP OF STEEL UNO.
.5 PROVIDE ERECTION BOLTS TO ASTM A325M, MINIMUM M20. DESIGN BOLTED CONNECTIONS TO ASTM A325 FOR THREADS EXCLUDED FROM SHEAR PLANE. TIGHTEN BOLTS BY THE "TURN OF NUT" METHOD TO BOLT TENSIONS SPECIFIED IN CSA S16.1.
.6 WELD TO CSA W59 BY FABRICATORS QUALIFIED TO CSA W47.1.
.7 CONNECTIONS NOT DETAILED ON THE STRUCTURAL DRAWINGS SHALL BE DESIGNED AND DETAILED BY THE STEEL FABRICATOR. ALL SHOP DRAWINGS MUST BE REVIEWED BY A PROFESSIONAL ENGINEER REGISTERED IN THE PROVINCE OF SASKATCHEWAN.
.8 BOLTS – A325 M20 (MIN.) MINIMUM 2 BOLTS PER CONNECTION. BRACING OR MEMBERS SUBJECT TO STRESS REVERSAL SHALL BE FRICTION TYPE. (MASK CONTACT SURFACES BEFORE PAINTING.)
.9 MINIMUM WELDS FOR CONNECTIONS SHALL BE 5 MM FILLET WELD AND WHERE EXPOSED IN FINISHED BUILDING WELD SHALL BE GROUND SMOOTH.
.10 PROVIDE BOLT HOLES IN STRUCTURAL STEEL WHERE SHOWN AND WHERE REQUIRED FOR THE ATTACHMENT OF BOLTED BLOCKING OR FASTENINGS BY OTHER TRADES.
.11 CLEAN ALL STEEL PRIOR TO PAINTING TO SSPC SURFACE PREPARATION SPECIFICATION NO. 3 "POWER TOOL CLEANING".
.12 PAINT STEEL SURFACES WITH ONE COAT OF PRIMER TO CISC/CPMA 1-73A. AFTER ERECTION PRIME ALL WELDS, ABRASIONS, BOLTED CONNECTIONS AND ALL OTHER SURFACES NOT SHOP PRIMED. ALL STEEL WILL BE EXPOSED TO WEATHER.

Stantec
Stantec Consulting Ltd.
301, 1919 Rose Street
Regina SK Canada
S4P 3P1
Tel. 306.781.6400
Fax. 306.781.6500

Consultants

Legend

Revision	By	Appd.	YY.MM.DD
1 ISSUED FOR TENDER & CONSTRUCTION	RAV	AJTA	16.04.15

Issued	By	Appd.	YY.MM.DD

File Name:	Dwn.	Chkd.	Dsgn.	YY.MM.DD

Permit-Seal

PROFESSIONAL ENGINEER A. ABKAR MEMBER 9950 16 04 15 SK. WK. DIV. SASKATCHEWAN

Association of Professional Engineers & Geoscientists of Saskatchewan
CERTIFICATE OF AUTHORIZATION
STANTEC CONSULTING LTD.
Number C999
Permission to Consult held by:

Discipline	Sk. Reg. No.	Signature
STRUCT	9950	A. Abkar

Client/Project
GOVERNMENT OF CANADA

UPGRADES TO TBU 61

Regina, Saskatchewan

Title
CRAWLSPACE
TYPICAL DETAILS
GENERAL NOTES

Project No.	Scale
144401453	AS NOTED

Drawing No.	Sheet	Revision
S3.1	of	0

ORIGINAL SHEET - ISO A0

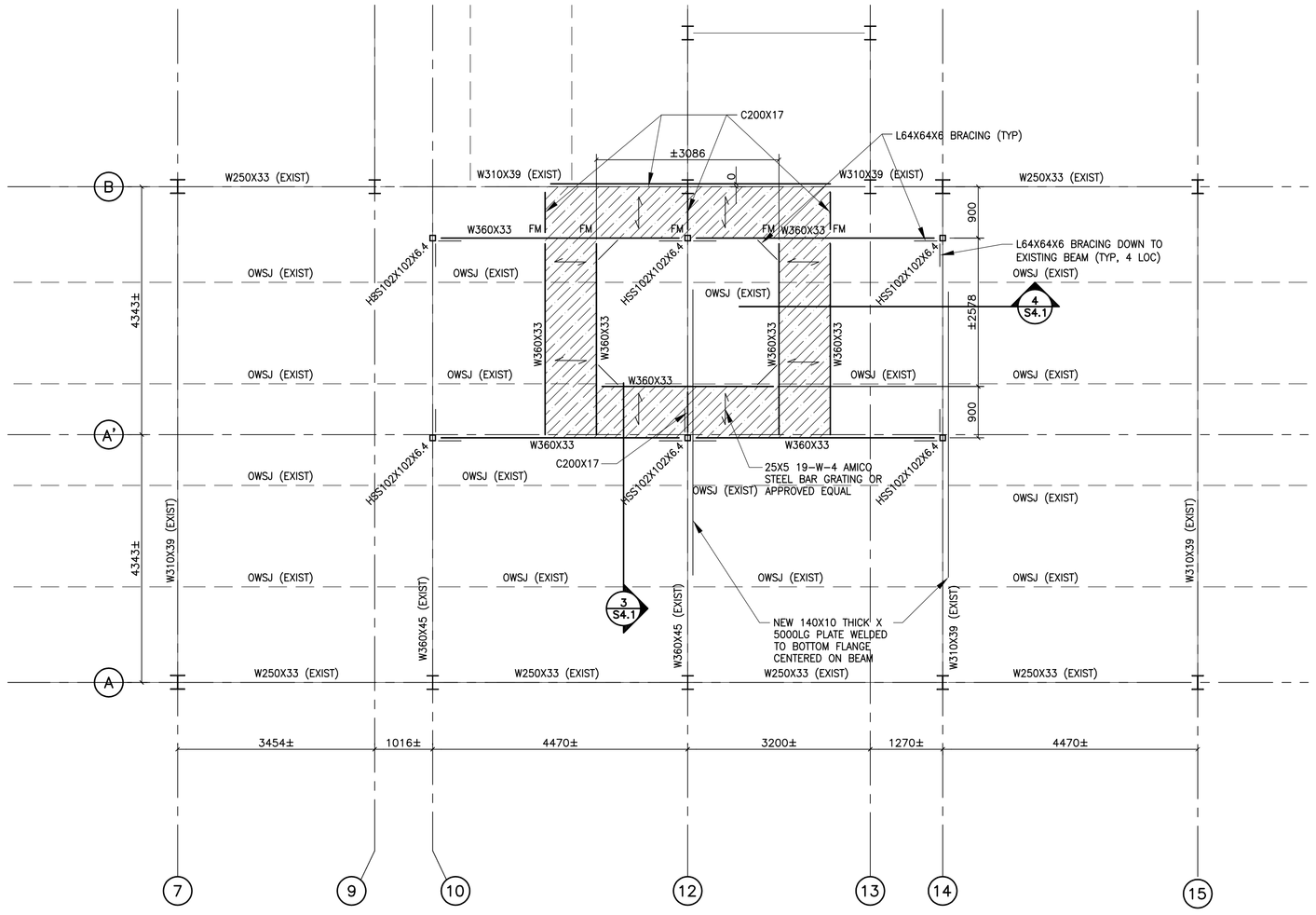

1 / – PARTIAL ROOF PLAN COOLING TOWER SUPPORT
1:50

NOTE:
–CONFIRM SIZE OF MECHANICAL UNIT BEFORE INSTALLATION.
– COOLING TOWER WEIGHT 37.8KN (8500lbs)
– WELD GRATING TO SUPPORTING STEEL @300 O.C.

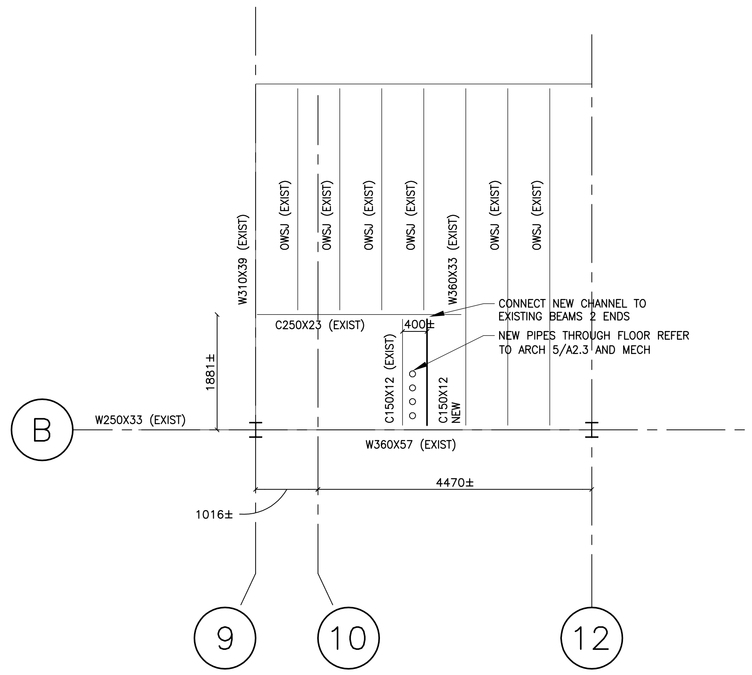

2 / – PARTIAL FLOOR PLAN
1:50

2ND FLOOR TO ROOF COORDINATE EXACT LOCATION WITH ARCH/MECH

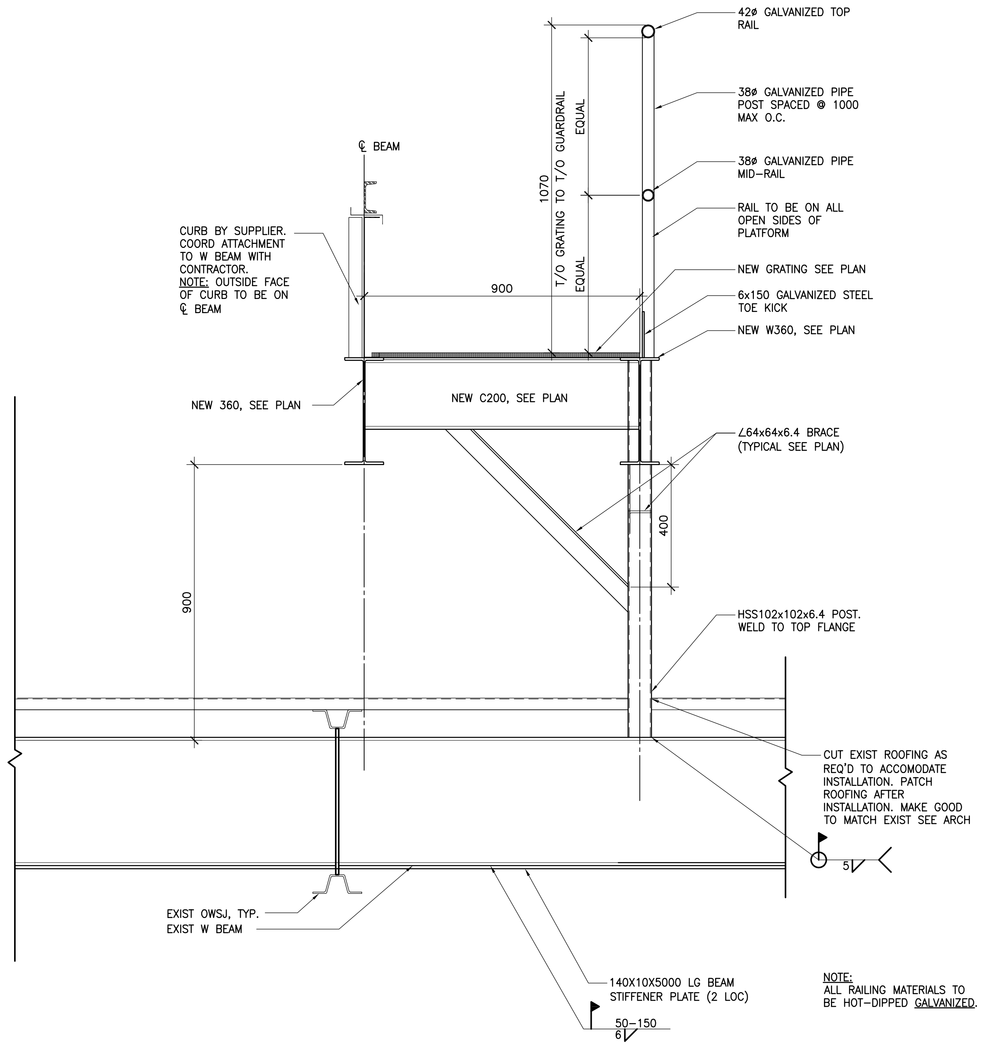

NOTE:
ALL RAILING MATERIALS TO BE HOT-DIPPED GALVANIZED.

3 / – TYP.STAND SECTION
1:10

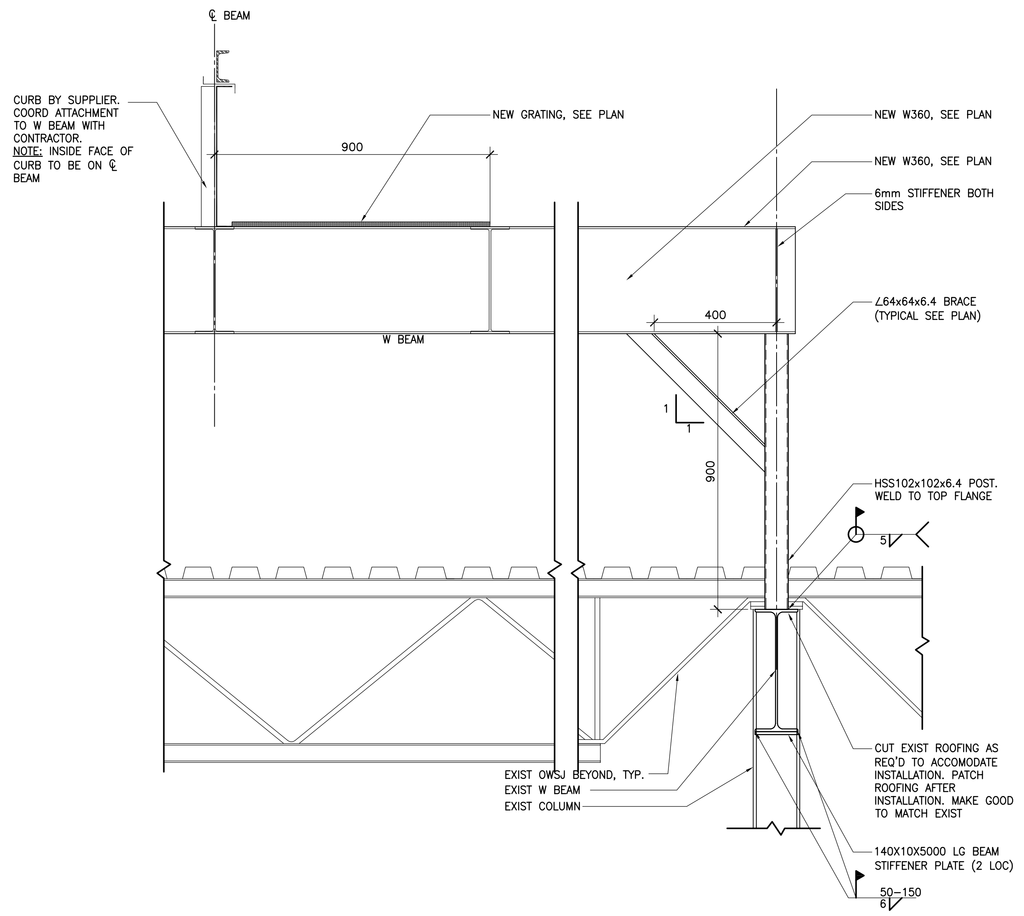

4 / – TYP.STAND SECTION
1:10

Stantec

Stantec Consulting Ltd.
301, 1919 Rose Street
Regina SK Canada
S4P 3P1
Tel. 306.781.6400
Fax. 306.781.6500

Consultants

LEGEND

FM – DENOTES FULL WELD CONNECTION ALL AROUND

Legend

NOTES:

1. REFER TO DWG S3.1 FOR TYPICAL REINFORCING DETAILS.
2. SEE STEEL SPECIFICATIONS FOR CONNECTIONS

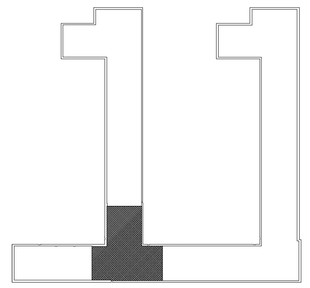

DO NOT SCALE DRAWINGS

Revision	By	Appd.	YY.MM.DD
1 ISSUED FOR TENDER & CONSTRUCTION	RAV	AZZA	16.04.15

Issued	By	Appd.	YY.MM.DD
File Name:	Dwn.	Chkd.	Dsgn. YY.MM.DD

Permit-Seal

PROFESSIONAL ENGINEER
A. ABKAR
MEMBER 9950
16.04.15
SK. MC. SIG.
SASKATCHEWAN

Association of Professional Engineers & Geoscientists of Saskatchewan
CERTIFICATE OF AUTHORIZATION
STANTEC CONSULTING LTD.
Number C9919
Permission to Consult held by:

Discipline	Sk. Reg. No.	Signature
STRUCT	9950	

Client/Project

GOVERNMENT OF CANADA

UPGRADES TO TBU 61

Regina, Saskatchewan

Title

PARTIAL ROOF PLAN AND DETAILS

Project No.	Scale
144401453	AS NOTED

Drawing No.	Sheet	Revision
S4.1	of	0

ORIGINAL SHEET - ISO A0

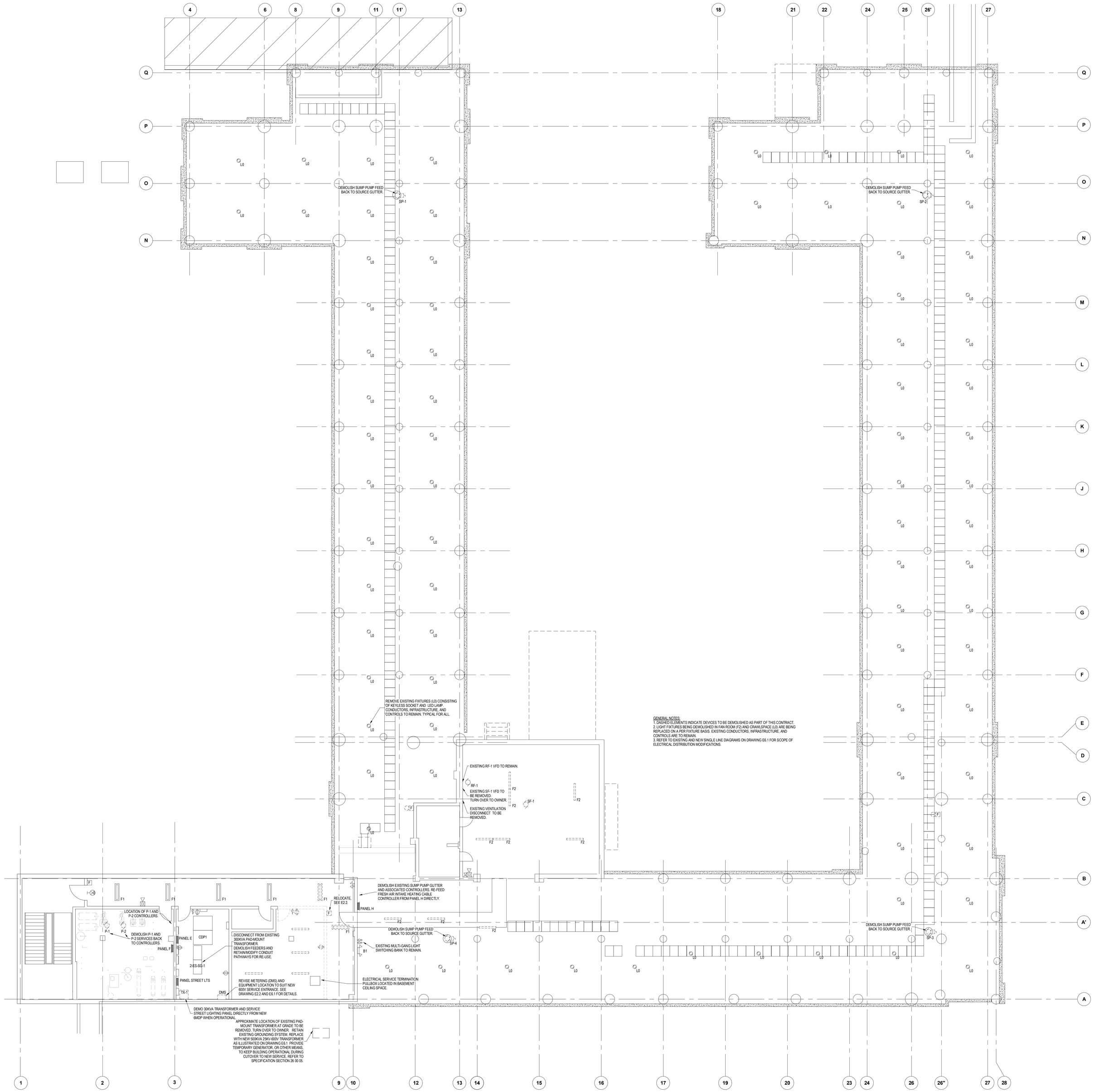

GENERAL NOTES:
1. DASHED ELEMENTS INDICATE DEVICES TO BE DEMOLISHED AS PART OF THIS CONTRACT.
2. LIGHT FIXTURES BEING DEMOLISHED IN FAN ROOM (F2) AND CRAWLSPACE (LD) ARE BEING REPLACED ON A PER FIXTURE BASIS. EXISTING CONDUCTORS, INFRASTRUCTURE, AND CONTROLS ARE TO REMAIN.
3. REFER TO EXISTING AND NEW SINGLE LINE DIAGRAMS ON DRAWING E6.1 FOR SCOPE OF ELECTRICAL DISTRIBUTION MODIFICATIONS.

1 BASEMENT POWER PLAN - DEMOLITION
E1.1 1 : 100

ABBREVIATIONS	
EX	EXISTING DEVICE TO REMAIN
RE	REMOVE EXISTING DEVICE
RP	REPLACE EXISTING DEVICE WITH NEW DEVICE
RL	RELOCATE EXISTING DEVICE
ER	EXISTING DEVICE IN RELOCATED POSITION
AFF	ABOVE FINISHED FLOOR
AFG	ABOVE FINISHED GRADE
BMS	BUILDING MANAGEMENT SYSTEM
GF	GROUND FAULT
GFCI	GROUND FAULT CIRCUIT INTERRUPTER
HK	HOUSEKEEPING
HFF	HANDS FREE FIXTURE
OC	ON CENTER
JB	JUNCTION BOX
MCC	MOTOR CONTROL CENTER
NC	NORMALLY CLOSED
NO	NORMALLY OPEN
IG	ISOLATED GROUND
RB	RELAY BASE
SPD	SURGE PROTECTIVE DEVICE
TR	TAMPER RESISTANT
TYP	TYPICAL
WP	WEATHERPROOF

POWER PLAN SYMBOLS	
	DUPLEX 5-15R RECEPTACLE
GF	DUPLEX 5-15R RECEPTACLE C/W INTEGRAL GFCI PROTECTION
	DUPLEX 5-20R RECEPTACLE, T-SLOT
	TELECOMMUNICATIONS OUTLET, # OF JACKS AS INDICATED
J	WALL MOUNTED JUNCTION BOX
	POWER PANELBOARD
	PANEL (TYPE AS INDICATED - SECURITY, LIGHTING RELAY, ETC.)
	MOTOR
	MOTOR c/w DISCONNECT SWITCH
	COMBINATION DISCONNECT AND MAGNETIC MOTOR STARTER
	DISCONNECT SWITCH
	FUSED DISCONNECT SWITCH
	MAGNETIC MOTOR STARTER
	MANUAL MOTOR STARTER c/w PILOT LIGHT
	DEVICE MOUNTED ABOVE MILLWORK COUNTERTOP

GENERAL SYMBOLS	
#	NOTE REFERENCE
## / ###	EQUIPMENT REFERENCE
#	REVISION NUMBER
##	WIRING HOME RUN

FIRE ALARM SYMBOLS	
F	FIRE ALARM MANUAL STATION
F	FIRE ALARM BELL
F	FIRE ALARM ELECTRONIC HORN/SOUNDER/CHIME c/w STROBE
F	FIRE ALARM SMOKE DETECTOR
FCI	FIRE ALARM FAULT ISOLATION MODULE
FM	FIRE ALARM CONTROL MODULE
MM	FIRE ALARM MONITOR MODULE

LIGHTING PLAN SYMBOLS	
	RECESSED LUMINARE, 1'x4'
	RECESSED LUMINARE, 2'x4'
	RECESSED LUMINARE, 2'x2'
	LINEAR STRIP LUMINARE, 4'
	LINEAR STRIP LUMINARE, 2'
	WALL MOUNTED LINEAR LUMINARE, 4'
	WALL MOUNTED LINEAR LUMINARE, 3'
	RECESSED LUMINARE / POT LIGHT, 6" DIAMETER OR LARGER
	RECESSED LUMINARE / POT LIGHT, LESS THAN 6" DIAMETER
E	LUMINARE ON EMERGENCY CIRCUIT (INDICATED BY HALF SHADING)
	LINE VOLTAGE SWITCH (120V TO 347V)
	CEILING MOUNTED EXIT SIGN (TEXT ON SHADED SIDES, ARROWS AS INDICATED)
	WALL MOUNTED EXIT SIGN (TEXT ON SHADED SIDES, ARROWS AS INDICATED)
	COMBINATION EXIT SIGN/EMERG. LTG. BATTERY PACK
OS	CEILING MOUNTED LIGHTING OCCUPANCY SENSOR (TYPE AS INDICATED)

LIGHTING ANNOTATION LEGEND	
XX	LUMINARE TYPE (SCHEDULE REFERENCE)
	PANEL
X-1.00	CIRCUIT
	SWITCH LEG

Stantec

Stantec Consulting Ltd.
301, 1919 Rose Street
Regina SK Canada
S4P 3P1
Tel. 306.781.6400
Fax. 306.781.6500

Consultants

Legend

Notes

Revision	By	Appd.	YY.MM.DD
ISSUED FOR TENDER & CONSTRUCTION	KAL	KAL	16.04.15
Issued	By	Appd.	YY.MM.DD
File Name: 144401453c_e1.1.dwg	KAL Dwn.	IW Chkd.	KAL Dsgn.
			16.02.18 YY.MM.DD

Permit-Seal

PROFESSIONAL ENGINEER K.A. LAMB 16 04 14 YR. MO. DAY SASKATCHEWAN

Association of Professional Engineers & Geoscientists of Saskatchewan
CERTIFICATE OF AUTHORIZATION
Stantec Consulting Ltd.
NUMBER : C669
PERMISSION TO CONSULT HELD BY:
DISCIPLINE: ELECTRICAL — SASK. REG. No.: 12649 — SIGNATURE

Client/Project
GOVERNMENT OF CANADA

UPGRADES TO TBU 61

Regina, Saskatchewan

Title
ELECTRICAL - BASEMENT AND CRAWLSPACE PLAN DEMOLITION

Project No.	Scale
144401453	1:100

Drawing No.	Sheet	Revision
E1.1	1 of 5	0

ORIGINAL SHEET - ISO A0

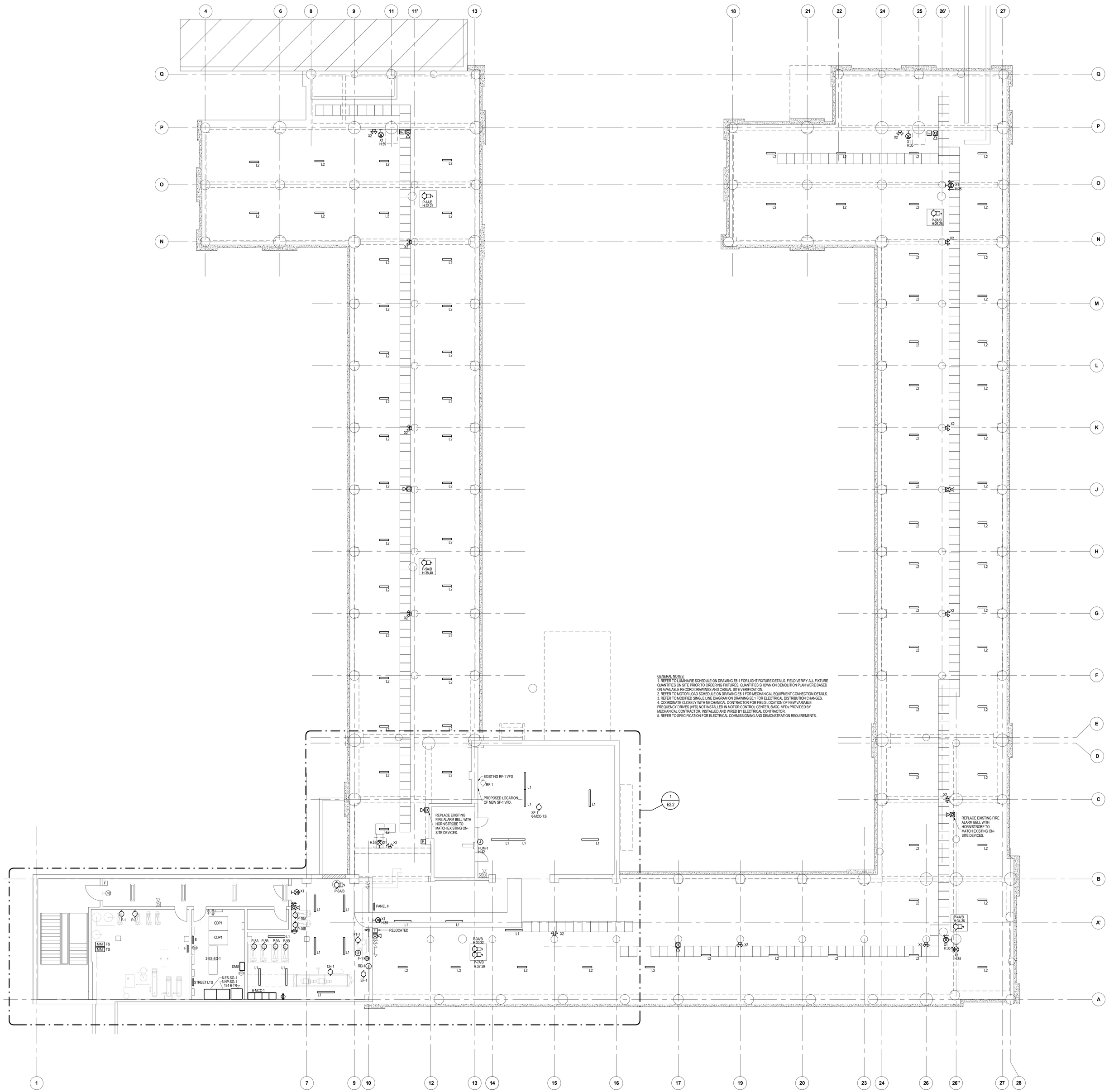

GENERAL NOTES:
1. REFER TO LUMINARE SCHEDULE ON DRAWING E6.1 FOR LIGHT FIXTURE DETAILS. FIELD VERIFY ALL FIXTURE QUANTITIES ON SITE PRIOR TO ORDERING FIXTURES. QUANTITIES SHOWN ON DEMOLITION PLAN WERE BASED ON AVAILABLE RECORD DRAWINGS AND CASUAL SITE VERIFICATION.
2. REFER TO MOTOR LOAD SCHEDULE ON DRAWING E6.1 FOR MECHANICAL EQUIPMENT CONNECTION DETAILS.
3. REFER TO MODIFIED SINGLE LINE DIAGRAM ON DRAWING E6.1 FOR ELECTRICAL DISTRIBUTION CHANGES.
4. COORDINATE CLOSELY WITH MECHANICAL CONTRACTOR FOR FIELD LOCATION OF NEW VARIABLE FREQUENCY DRIVES (VFD) NOT INSTALLED IN MOTOR CONTROL CENTER (MCC. VFDs PROVIDED BY MECHANICAL CONTRACTOR, INSTALLED AND WIRED BY ELECTRICAL CONTRACTOR.
5. REFER TO SPECIFICATION FOR ELECTRICAL COMMISSIONING AND DEMONSTRATION REQUIREMENTS.

1 E2.1

CRAWLSPACE POWER PLAN - NEW

1 : 100

ORIGINAL SHEET - ISO A0

\\Ca0106-0011\shared_projects\144401453\electrical\drawings\ver1\144401453c_e2.1.dwg
— By: Lynds, Kerry

Stantec

Stantec Consulting Ltd.
301, 1919 Rose Street
Regina SK Canada
S4P 3P1
Tel. 306.781.6400
Fax. 306.781.6500

Consultants

Legend

Notes

Revision	By	Appd.	YY.MM.DD
ISSUED FOR TENDER & CONSTRUCTION	KAL	KAL	16.04.15
Issued	By	Appd.	YY.MM.DD

File Name: 144401453c_e2.1.dwg	KAL	IW	KAL	16.02.18
	Dwn.	Chkd.	Dsgn.	YY.MM.DD

Permit-Seal

PROFESSIONAL ENGINEER — K. A. LAMB — MEMBER 12849 — 16 04 14 — YR. MN. DAY — SASKATCHEWAN

Association of Professional Engineers & Geoscientists of Saskatchewan
CERTIFICATE OF AUTHORIZATION
Stantec Consulting Ltd.
NUMBER : C969
PERMISSION TO CONSULT HELD BY:

DISCIPLINE	SASK. REG. No.	SIGNATURE
ELECTRICAL	12849	

Client/Project
GOVERNMENT OF CANADA

UPGRADES TO TBU 61

Regina, Saskatchewan

Title
ELECTRICAL - CRAWLSPACE POWER PLAN - NEW

Project No.	Scale
144401453	1:100

Drawing No.	Sheet	Revision
E2.1	2 of 5	0

GENERAL NOTES
1. SWITCHBOARD ELEVATIONS ARE SHOWN TO INDICATE GENERAL ARRANGEMENT OF DEVICES ONLY. EQUIPMENT MANUFACTURER TO CONFIRM. CONTRACTOR TO COORDINATE SIZE OF SWITCHBOARD WITH SITE CONDITIONS.
2. MOTOR CONTROL CENTER SPACES TO BE PREPARED TO ACCEPT FUTURE PLUG-IN BUCKETS.
3. MOTOR CONTROL BREAKERS MAY BE COMBINED IN A DUAL 24 SECTION.
4. MOTOR CONTROL CENTER ELEVATIONS ARE SHOWN TO INDICATE GENERAL ARRANGEMENT ONLY. EQUIPMENT MANUFACTURER TO CONFIRM.

5 / E2.2 SERVICE ENTRANCE AND MCC ELEVATION
1 : 50

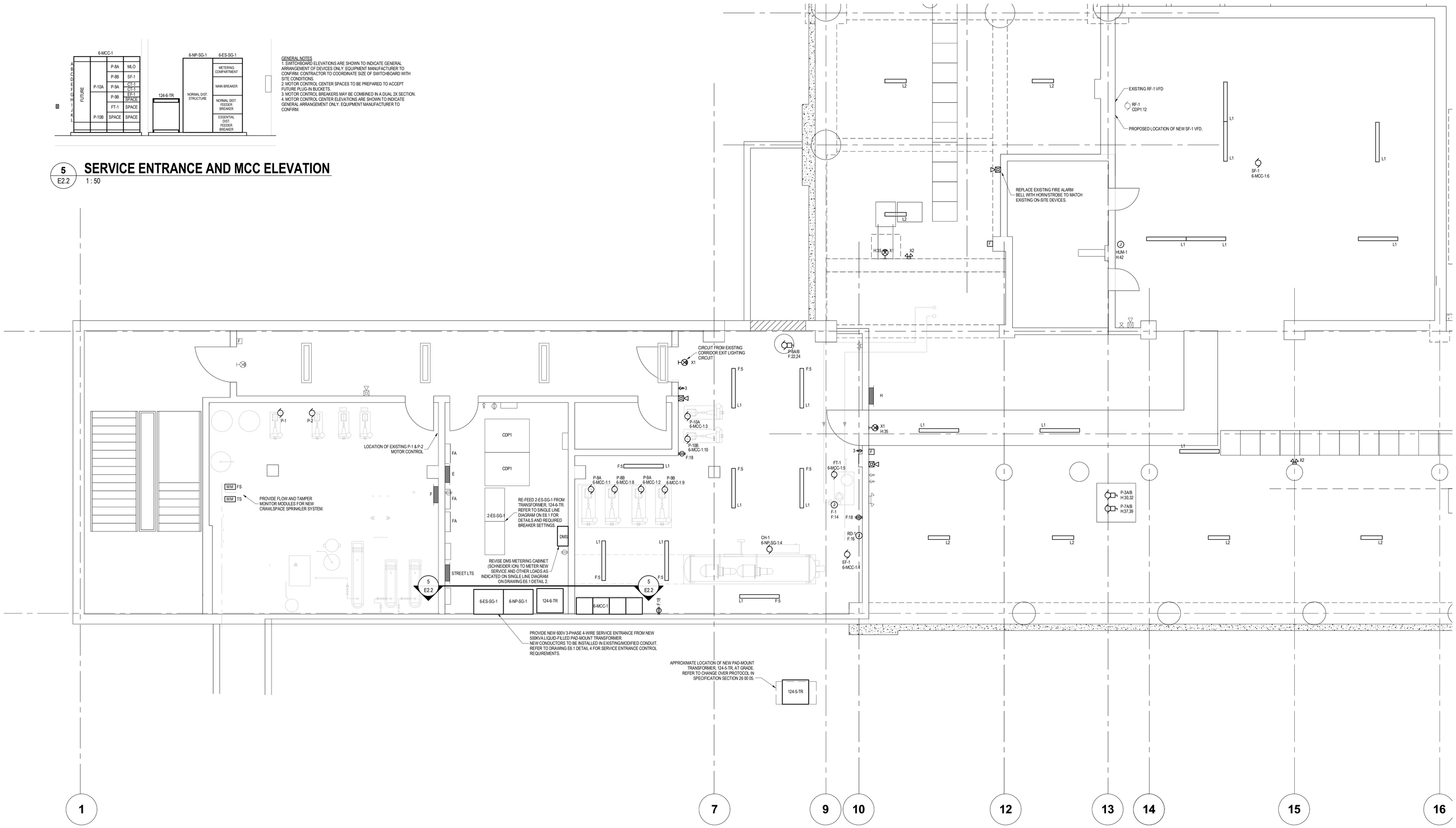

1 / E2.2 BASEMENT POWER PLAN - NEW
1 : 50

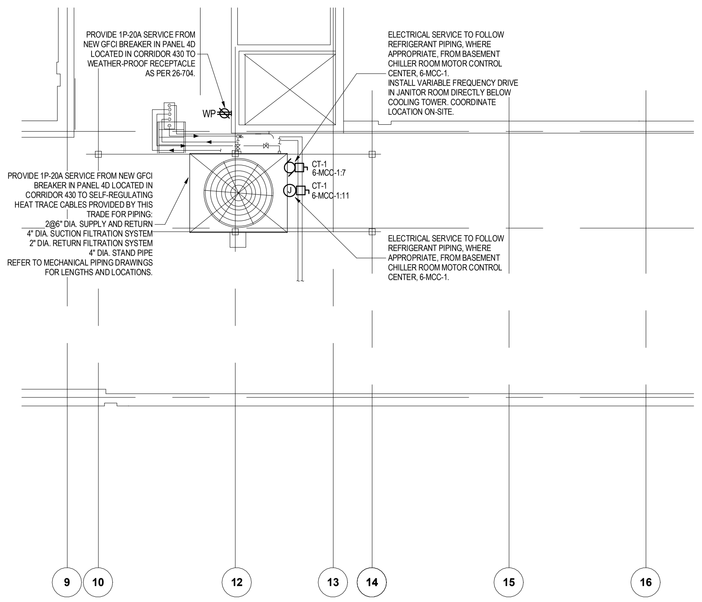

2 / E2.2 ELECTRICAL ROOF PLAN - NEW
1 : 100

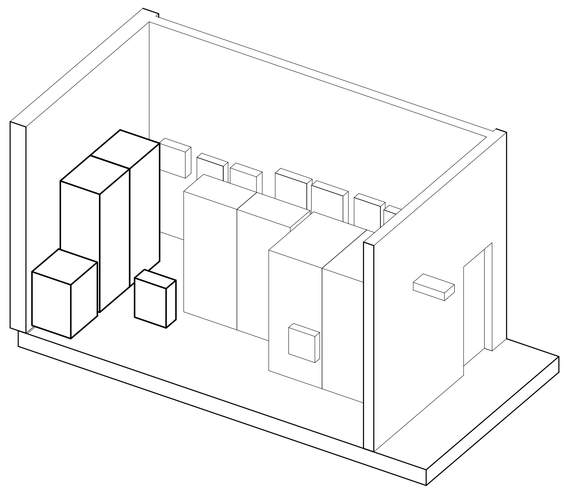

3 / E2.2 ELECTRICAL ROOM ISOMETRIC - NEW

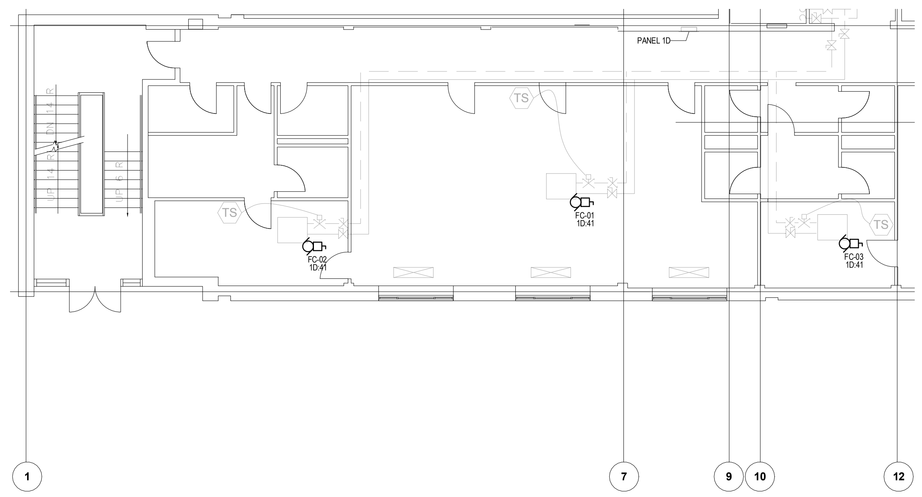

GENERAL NOTES:
1. DEMOLISH EXISTING ELECTRICAL INFRASTRUCTURE TO EXISTING SPLIT COOLING SYSTEM ON MAIN FLOOR (INTERIOR AND EXTERIOR UNITS). REFER TO MECHANICAL DRAWING M1.14 FOR INFORMATION. DETERMINE ELECTRICAL CONNECTION SOURCE ON-SITE.
2. PROVIDE NEW 1P-20A CIRCUIT FROM PANEL 1D TO SERVICE NEW FAN COILS, FC-01, 02, AND 03.

4 / E2.2 ELECTRICAL MAIN FLOOR - NEW
1 : 100

Stantec

Stantec Consulting Ltd.
301, 1919 Rose Street
Regina SK Canada
S4P 3P1
Tel. 306.781.6400
Fax. 306.781.6500

Consultants

Legend

Notes

Revision	By	Appd.	YY.MM.DD
ISSUED FOR TENDER & CONSTRUCTION	KAL	KAL	16.04.15
Issued	By	Appd.	YY.MM.DD
File Name: 144401453c_e2.2.dwg	KAL Dwn.	IW Chkd.	KAL Dsgn.	16.02.18 YY.MM.DD

Permit-Seal

PROFESSIONAL ENGINEER K.A. LAMB 16 04 14 SASKATCHEWAN

Association of Professional Engineers & Geoscientists of Saskatchewan
CERTIFICATE OF AUTHORIZATION
Stantec Consulting Ltd.
NUMBER : C0169
PERMISSION TO CONSULT HELD BY:

DISCIPLINE	SASK. REG. No.	SIGNATURE
ELECTRICAL	12640	

Client/Project
GOVERNMENT OF CANADA

UPGRADES TO TBU 61

Regina, Saskatchewan

Title
ELECTRICAL - BASEMENT, MAIN FLOOR, AND ROOF - NEW CONSTRUCTION

Project No.	Scale	
144401453	AS INDICATED	
Drawing No.	Sheet	Revision
E2.2	3 of 5	0

\\ca1184-f01\Shared_projects\144401453\electrical\drawings\rev1\144401453c_e2.2.dwg
By: Lamb, Kerry

ORIGINAL SHEET - ISO A0

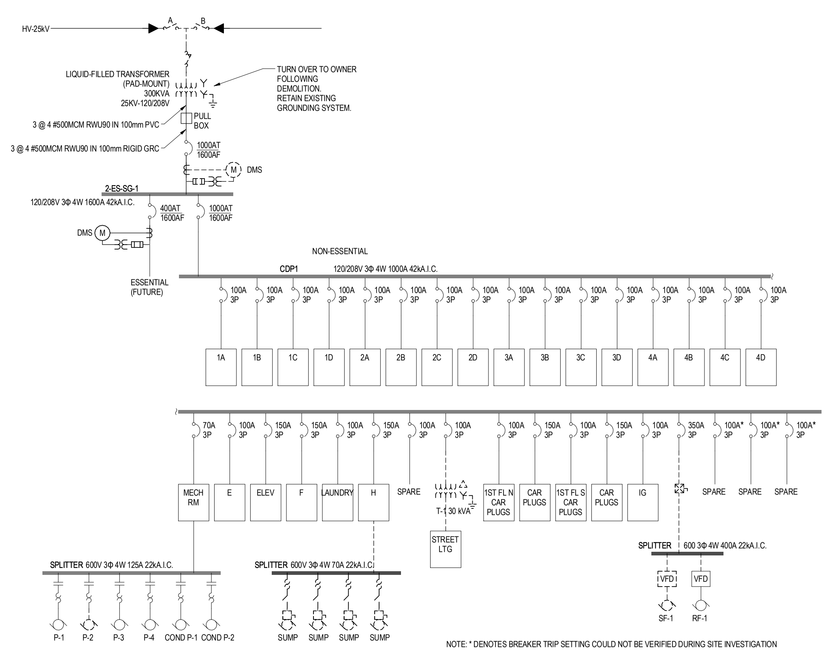

1 E6.1 **SINGLE LINE DIAGRAM - EXISTING**
N.T.S.

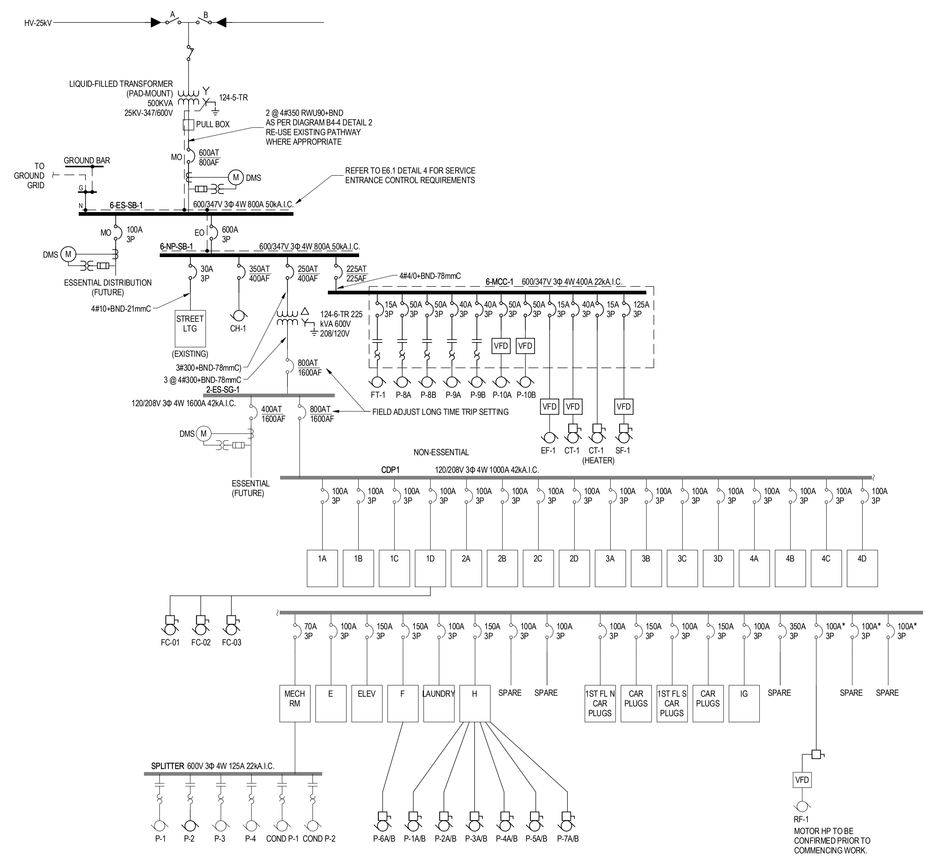

2 E6.1 **SINGLE LINE DIAGRAM - MODIFIED**
N.T.S.

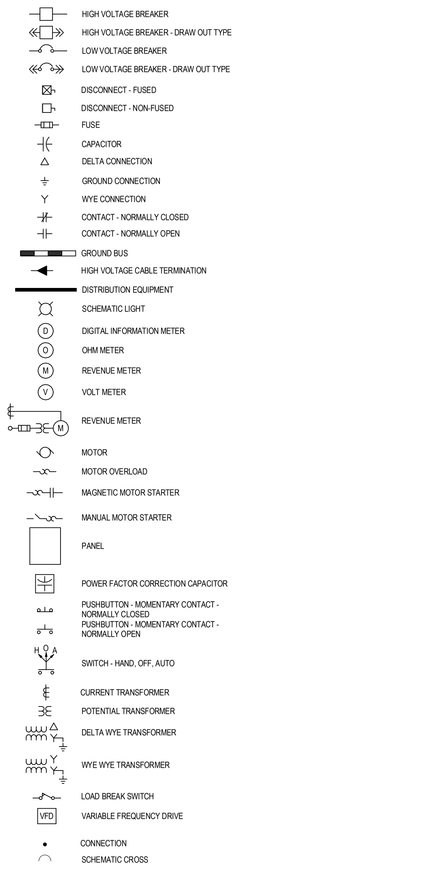

3 E6.1 **SINGLE LINE DIAGRAM - LEGEND**
N.T.S.

LEGEND
CT - CURRENT TRANSFORMER
PT - POTENTIAL TRANSFORMER
SA - SURGE ARRESTOR
DTB - DISCONNECTING TERMINAL
STP - SHORTING TERMINAL
DMS - DIGITAL METERING SYSTEM
A) IA, IB, IC, IG, IDEMAND
B) IABC, VABC, HZ, PF, VAR, VAR, KVA, WH, KVARH, KWD, KVAD
2 - TIME DELAY SETTING OR CLOSING RELAY
15 - SYNCHRONIZER
15Y - SYNCHRONIZER ENABLE
2 - SYNCH SCOPE
27 - UNDER VOLTAGE RELAY
32 - DIRECTIONAL POWER RELAY
40 - LOSS OF EXCITATION RELAY
43 - MANUAL TRANSFER OR SELECTOR DEVICE
47 - NEGATIVE SEQUENCE VOLTAGE RELAY
50 - INSTANTANEOUS OVER CURRENT RELAY
51 - TIMED OVERCURRENT RELAY
51V - VOLTAGE CONTROLLER OVER CURRENT RELAY
59 - OVER VOLTAGE RELAY
60 - SPEED REGULATOR
61 - FREQUENCY RELAY (OVERUNDER)
86 - LOCK OUT RELAY MANUALLY RESET
90V - VOLTAGE REGULATOR
VM - VOLTMETER
AM - AMMETER
WM - WATTMETER
HZ - FREQUENCY METER
KS - KILOWATT SWITCH
MS - AMMETER SWITCH
ST - SHUNT TRIP
EO - ELECTRICAL OPERATOR
B - BUS
F - FIELD
G - GROUND OR GENERATOR
N - NEUTRAL

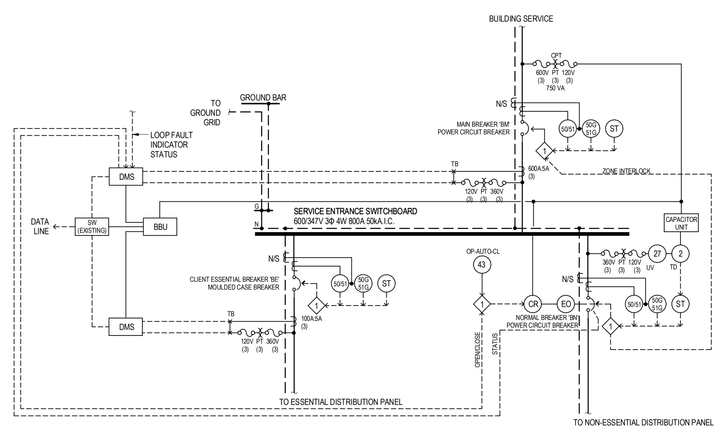

4 E6.1 **SERVICE ENTRANCE SCHEMATIC**
N.T.S.

GENERAL NOTES
1. UNDER VOLTAGE AND TIME DELAY TO BE DISABLED FOR NORMAL BREAKER 'BN' UNTIL SUCK TIME THAT THE LOADS WITHIN THE BUILDING ARE SEGREGATED INTO ESSENTIAL AND NON-ESSENTIAL LOADS.
2. CONTRACTOR TO PROVIDE LAMACOID NAMEPLATE ON SERVICE ENTRANCE DISTRIBUTION THAT READS "NO LIFE SAFETY LOADS ARE TO BE CONNECTED TO CLIENT ESSENTIAL SYSTEMS" - SYSTEMS WITH IDENTIFIERS X-ES-XX-X.
3. CONTROL CABLE FROM BREAKER TO DIGITAL METERING SYSTEM TO BE: 6C # 14 CU,XLPE/PVC 600V MULTICONDUCTOR IN 27mmC PVC (EMT WITHIN BUILDING) OR 4C # 14 Cu 600V TECK90 CONTROL CABLE. ALL CONTROL CABLES SHALL BE CSA APPROVED. ALL UNUSED CONDUCTORS TO BE COILED AND TAPED AS SPARES.
4. THE SERVICE EQUIPMENT CONFIGURATION SHALL CONSIST OF A SINGLE SECTION SERVICE ENTRANCE SWITCHBOARD, CONTAINING ELECTRONIC TRIP CIRCUIT BREAKERS BM, BN, AND BE WITH METERING CTS AND PTS FOR TWO (2) DIGITAL METERING UNITS FOR THE MAIN AND ESSENTIAL SERVICES.

SYSTEM OPERATION
THE BUILDING'S MAIN SERVICE BREAKER (BM) AND ESSENTIAL BREAKER (BE) WILL NORMALLY REMAIN CLOSED AT ALL TIMES, EXCEPT FOR PROTECTION TRIPS. THE NORMAL BREAKER (BN) WILL BE EQUIPPED WITH AN UNDER-VOLTAGE TRIP/RELEASE DEVICE COMPLETE WITH ADJUSTABLE TIME-DELAY WHICH WILL CAUSE THE BREAKER TO OPEN WHENEVER ITS SUPPLY POTENTIAL IS INTERRUPTED (IE. WHEN THE ELECTRIC UTILITY SOURCE FAILS RESULTING IN THE 'NORMAL' LOADS IN THE BUILDING BEING ISOLATED FROM THE SERVICE). DURING A UTILITY POWER FAILURE THE MC PLC WILL AUTOMATICALLY RE-ENERGIZE THE BUILDING ESSENTIAL LOADS VIA BREAKERS BM AND BE. THE BN BREAKER WILL REMAIN OPEN UNTIL A SIGNAL IS RECEIVED FROM THE MC PLC CONTROL SYSTEM. VIA THE DIGITAL METERING UNIT, TO CLOSE. THIS WILL OCCUR WHEN THEN SUPPLY IS AGAIN SOURCED FROM THE UTILITY. THE BM AND BN BREAKERS WILL BE CONTROLLED THROUGH A ZONE SELECTIVE INTERLOCK TO PREVENT THE BM BREAKER FROM OPERATING SHOULD A FAULT OCCUR DOWNSTREAM OF THE BN BREAKER. THE BN BREAKER WILL BE CONTROLLED VIA A 3-WAY SWITCH (43) WITH SPRING RETURN TO THE 'AUTO' POSITION. WHEN THE 3-WAY SWITCH IS MOVED TO THE 'OPEN OR CLOSE' POSITION IT WILL OPEN/CLOSE THE BREAKER AND AUTOMATICALLY RETURN TO THE 'AUTO' POSITION WHEN RELEASED. WITH THE 3-WAY SELECTOR SWITCH IN THE 'AUTO' POSITION, THE NORMAL BREAKER CAN BE CLOSED FROM THE MC PLC CONTROL SYSTEM.

CIRCUIT BREAKER FEATURES
THE BM, BN, AND BE CIRCUIT BREAKERS SHALL HAVE LIB PROTECTION FUNCTIONS AND THE FEATURES IDENTIFIED IN THE SCHEMATIC. IN ADDITION THE FOLLOWING ACCESSORIES ARE REQUIRED FOR THE NORMAL ELECTRONIC TRIP CIRCUIT BREAKER (BN)
1. UNDER VOLTAGE TRIPPING DEVICE (27) CW FILED ADJUSTABLE TIME DELAY (2) ADJUSTABLE FROM 0.1 TO 20 SECONDS AND CAPACITOR TRIP POWER SUPPLY.
2. SHUNT TRIP (ST).
3. ZONE SELECTIVE INTERLOCK TO DELAY TRIPPING OF MAIN BREAKER (BM) UNTIL NORMAL BREAKER (BN) HAS CLEARED A FAULT CONDITION.
4. ELECTRICAL (MOTOR) OPERATOR (EO) WITH LOCAL 'OPEN/CLOSE' AND REMOTE 'CLOSE' CAPABILITY.
5. CONTROL RELAY (CR).
6. BREAKER STATUS AUXILIARY SWITCHES: N.O. AND N.C. CONTACTS.
7. TRIP ALARM SWITCH.
8. 3-WAY SELECTOR SWITCH (43, OP-AUTO-CL) WITH SPRING RETURN TO 'AUTO' POSITION, AND
9. PAD LOCKABLE IN THE 'OPEN' POSITION.

DIGITAL METERING
MAKE PROVISION, IN UPPER CELL OF SWITCHBOARD FOR:
1. FUSED POTENTIAL TAPS.
2. THREE (3) 300/120V POTENTIAL TRANSFORMERS.
3. THREE (3) CURRENT TRANSFORMERS ON LOAD SIDE OF 'BM' AND 'BE' BREAKERS FOR CONNECTION TO RESPECTIVE METERING UNIT WITH FUSING AND SHORTING TEST BLOCK (4XPT AND 3XCT SHORTING LINKS).
4. FUSED POTENTIAL TAP.
5. ONE (1) 600/120V CONTROL POTENTIAL TRANSFORMER ON LINE SIDE OF BREAKER 'BM' BREAKER FOR POWER CONNECTION TO DIGITAL METERING BATTERY BACK-UP UNIT (BBU).
6. MOTORIZED OPERATOR ON BREAKER 'BN', AND
7. CAPACITOR UNIT FOR UNDER-VOLTAGE TRIP OF BREAKER 'BN'.

LUMINARE SCHEDULE

TYPE	DESCRIPTION	MOUNTING	LAMP TYPE	LAMP QTY	BALLAST	VOLT	WATTS	MANUFACTURER	MODEL	NOTES
						24 V	12 W			
B1	BATTERY PACK (EXISTING)	WALL	-		ELECTRONIC	120 V	100 W	-	-	PROVIDE NEW BATTERY TO ENSURE CONNECTED LOAD OPERATES FOR 30 MINUTES
F1	1X4 SURFACE FLUORESCENT (EXISTING)	SURFACE				120 V	9 W			
L1	4' LINEAR STRIP	SUSPENDED	LED	1	ELECTRONIC	120 V	22 W	COOPER METALUX SLSTP	4SNLED-L04-26SL-LC-UNV-CD1	
L2	2' LINEAR STRIP	SURFACE	LED	1	ELECTRONIC	120 V	17 W	COOPER METALUX SLSTP	2SNLED-L04-18SL-LC-UNV-CD1-U	
X1	EXIT SIGN	WALL	LED	1	ELECTRONIC	120 V	3 W	LUMACELL	LA SERIES	PROVIDE NEXRF OPTION
X2	REMOTE HEAD	WALL	LED	2	ELECTRONIC	24 V	5 W	LUMACELL	MT2-L09	COORDINATE DC VOLTAGE OF BATTERY PACK PRIOR TO ORDER

MOTOR LOAD SCHEDULE

UNIT ID	DESCRIPTION	LOCATION	TYPE OF EQUIPMENT	VOLTS	PH	INDIVIDUAL MOTOR FLA	HP	PACKAGED UNIT MCA	MOP	kW	# OF CONNEC-TIONS	STARTER TYPE	ACCESSORIES	CTRL	FIRE ALARM INTERFACE	AUTO ON	AUTO OFF	ROOM SWITCH	ROOM TYPE	POWER SOURCE (MCC/MOD/CDP/PANEL)	BREAKER RATING	# OF WIRES	WIRE SIZE (COPPER)	CONDUIT SIZE	NOTES
CH-1	CHILLER	CHILLER ROOM	PACKAGED UNIT - SINGLE POINT CONNECTION	600 V	3	222.0 A	0	235.0 A	350 A	230.000 kW	1	FEEDER BREAKER		BAS						6-NF-SG-1	350 A	3	500MCM	103mm	VFD INTEGRAL TO UNIT. PROVIDED BY CHILLER SUPPLIER
CT-1	COOLING TOWER FAN	ROOF	PACKAGED UNIT - SINGLE POINT CONNECTION	600 V	3	17.0 A	15	21.3 A	40 A	11.190 kW	1	VFD		BAS						6-MCC-1	40 A	3	#8	27mm	VFD TO BE LOCATED IN JANITOR ROOM ON 4TH FLOOR. VFD BY DIV 23. PROVIDE FEEDER BREAKER IN 6-MCC-1.
CT-1	COOLING TOWER (HEATER)	ROOF	PACKAGED UNIT - SINGLE POINT CONNECTION	600 V	3	7.7 A	0	15.0 A	15 A	8.000 kW	1			ET						6-MCC-1	15 A	3	#12	21mm	
EF-1	EXHAUST FAN	CHILLER ROOM	PACKAGED UNIT - SINGLE POINT CONNECTION	600 V	3	1.7 A	1	2.5 A	15 A	0.746 kW	1	VFD		BAS						6-MCC-1	15 A	3	#12	21mm	VFD TO BE WALL MOUNTED. VFD BY DIV 23. PROVIDE FEEDER BREAKER IN 6-MCC-1.
F-1	COOLING TOWER WATER TREATMENT	CHILLER ROOM	PACKAGED UNIT - SINGLE POINT CONNECTION	120 V	1	12.0 A	0	15.0 A	15 A	0.500 kW	1			BAS						F	15 A	2	#12	21mm	
FC-01	FAN COIL	MAIN FLOOR	PACKAGED UNIT - SINGLE POINT CONNECTION	120 V	1	4.4 A	0.17	5.3 A	20 A	0.124 kW	1			ET						1D	20 A	2	#12	21mm	PROVIDE NEW 1P20A BREAKER IN PANEL 1D TO SERVE FAN COILS. FC-01, 02, AND 03.
FC-02	FAN COIL	MAIN FLOOR	PACKAGED UNIT - SINGLE POINT CONNECTION	120 V	1	9.0 A	0.1	3.8 A	20 A	0.075 kW	1			ET						1D	20 A	2	#12	21mm	SEE FC-01
FC-03	FAN COIL	MAIN FLOOR	PACKAGED UNIT - SINGLE POINT CONNECTION	120 V	1	3.0 A	0.1	3.8 A	20 A	0.075 kW	1			ET						1D	20 A	2	#12	21mm	SEE FC-01
FT-1	FILTER TOWER	CHILLER ROOM	PACKAGED UNIT - SINGLE POINT CONNECTION	600 V	3	2.7 A	2	3.8 A	15 A	1.492 kW	1	COMBINATION	STD	BAS						6-MCC-1	15 A	3	#12	21mm	
HUM-1	HUMIDIFIER	FAN ROOM	PACKAGED UNIT - SINGLE POINT CONNECTION	120 V	1	12.0 A	0	15.0 A	15 A	0.500 kW	1			BAS						H	15 A	2	#12	21mm	
P-1	HOT WATER PUMP	MECHANICAL ROOM	PACKAGED UNIT - SINGLE POINT CONNECTION	208 V	3	19.3 A	5	25.0 A	50 A	3.730 kW	1	EXISTING		BAS							50 A	3	#8	27mm	RE-FEED NEW PUMP FROM EXISTING CONTROLLER LOCATED IN MECHANICAL ROOM
P-1A/B	SUMP PUMP	CRAWL SPACE	PACKAGED UNIT - SINGLE POINT CONNECTION	208 V	1	7.6 A	0.5	10.0 A	20 A	0.373 kW	1			LVS						H	20 A	2	#12	21mm	
P-2	HOT WATER PUMP	MECHANICAL ROOM	PACKAGED UNIT - SINGLE POINT CONNECTION	208 V	3	19.3 A	5	25.0 A	50 A	3.730 kW	1	EXISTING		BAS							50 A	3	#8	27mm	RE-FEED NEW PUMP FROM EXISTING CONTROLLER LOCATED IN MECHANICAL ROOM
P-2A/B	SUMP PUMP	CRAWL SPACE	PACKAGED UNIT - SINGLE POINT CONNECTION	208 V	1	7.6 A	0.5	10.0 A	20 A	0.373 kW	1			LVS						H	20 A	2	#12	21mm	
P-3/A/B	SUMP PUMP	CRAWL SPACE	PACKAGED UNIT - SINGLE POINT CONNECTION	208 V	1	7.6 A	0.5	10.0 A	20 A	0.373 kW	1			LVS						H	20 A	2	#12	21mm	
P-4/A/B	SUMP PUMP	CRAWL SPACE	PACKAGED UNIT - SINGLE POINT CONNECTION	208 V	1	7.6 A	0.5	10.0 A	20 A	0.373 kW	1			LVS						H	20 A	2	#12	21mm	
P-5/A/B	SUMP PUMP	CRAWL SPACE	PACKAGED UNIT - SINGLE POINT CONNECTION	208 V	1	7.6 A	0.5	10.0 A	20 A	0.373 kW	1			LVS						H	20 A	2	#12	21mm	
P-6/A/B	SUMP PUMP	CHILLER ROOM	PACKAGED UNIT - SINGLE POINT CONNECTION	208 V	1	7.6 A	0.5	10.0 A	20 A	0.373 kW	1			LVS						F	20 A	2	#12	21mm	PROVIDE SELF-REGULATING HEAT TRACE ON DRAIN LINE.
P-7/A/B	SUMP PUMP	CRAWL SPACE	PACKAGED UNIT - SINGLE POINT CONNECTION	208 V	1	7.6 A	0.5	10.0 A	20 A	0.373 kW	1			LVS						H	20 A	2	#12	21mm	
P-9A	COOLING TOWER PUMP	CHILLER ROOM	PACKAGED UNIT - SINGLE POINT CONNECTION	600 V	3	22.0 A	20	27.5 A	50 A	14.920 kW	1	COMBINATION	STD	BAS						6-MCC-1	50 A	3	#8	27mm	
P-9B	COOLING TOWER PUMP - STANDBY	CHILLER ROOM	PACKAGED UNIT - SINGLE POINT CONNECTION	600 V	3	22.0 A	20	27.5 A	50 A	14.920 kW	1	COMBINATION	STD	BAS						6-MCC-1	50 A	3	#8	27mm	
P-9A	PRIMARY CHILLED WATER PUMP	CHILLER ROOM	PACKAGED UNIT - SINGLE POINT CONNECTION	600 V	3	17.0 A	15	21.3 A	40 A	11.190 kW	1	COMBINATION	STD	BAS						6-MCC-1	40 A	3	#8	27mm	
P-9B	PRIMARY CHILLED WATER PUMP - STANDBY	CHILLER ROOM	PACKAGED UNIT - SINGLE POINT CONNECTION	600 V	3	17.0 A	15	21.3 A	40 A	11.190 kW	1	COMBINATION	STD	BAS						6-MCC-1	40 A	3	#8	27mm	
P-10A	SECONDARY CHILLED WATER PUMP	CHILLER ROOM	PACKAGED UNIT - SINGLE POINT CONNECTION	600 V	3	22.0 A	20	27.5 A	50 A	14.920 kW	1	VFD	HOA, PLR	BAS						6-MCC-1	50 A	3	#8	27mm	VFD TO BE LOCATED IN MCC STRUCTURE. VFD BY DIV 23.
P-10B	SECONDARY CHILLED WATER PUMP - STANDBY	CHILLER ROOM	PACKAGED UNIT - SINGLE POINT CONNECTION	600 V	3	22.0 A	20	27.5 A	50 A	14.920 kW	1	VFD	HOA, PLR	BAS						6-MCC-1	50 A	3	#8	27mm	VFD TO BE LOCATED IN MCC STRUCTURE. VFD BY DIV 23.
RD-1	REFRIGERANT DETECTOR	MECHANICAL ROOM	PACKAGED UNIT - SINGLE POINT CONNECTION	120 V	1	12.0 A	0	15.0 A	15 A	0.500 kW	1			BAS						F	15 A	2	#12	21mm	PROVIDE 120 / 24V TRANSFORMER TO SERVICE CONTROL PANEL.
RF-1	RETURN FAN (EXISTING)	FAN ROOM	PACKAGED UNIT - SINGLE POINT CONNECTION	208 V	3	17.0 A	15	21.3 A	40 A	11.190 kW	1	VFD		BAS						CDP1	40 A	3	#8	27mm	RE-FEED EXISTING VFD FROM CDP1. PROVIDE NEW BREAKER AS REQUIRED. CONTRACTOR TO CONFIRM HP OF EXISTING MOTOR
SF-1	SUPPLY FAN	FAN ROOM	PACKAGED UNIT - SINGLE POINT CONNECTION	600 V	3	52.0 A	50	65.0 A	125 A	37.300 kW	1	VFD		BAS						6-MCC-1	125 A	3	#1	53mm	VFD TO BE LOCATED IN FAN ROOM. VFD BY DIV 23. PROVIDE FEEDER BREAKER IN 6-MCC-1.

ABBREVIATIONS:
M - MECHANICAL (DIV. 21/22/23/25)
E - ELECTRICAL (DIV.06)
FLA - FULL LOAD CURRENT (AMPERES)
MCA - MINIMUM CIRCUIT AMPACITY
MOP - MAXIMUM OVERCURRENT PROTECTION (APPLICABLE TO CIRCUIT BREAKERS ONLY UNLESS OTHERWISE NOTED)
BAS - BUILDING AUTOMATION SYSTEM
CACF - CENTRAL ALARM AND CONTROL FACILITY (FIRE ALARM)
MAG - MAGNETIC STARTER
MAG2 - MAGNETIC STARTER (2 SPEED)
MAN - MANUAL MOTOR STARTER
MRR - MOTOR RATED RELAY
VFD - VARIABLE FREQUENCY DRIVE
PCS1 - PACKAGED CONTROL SYSTEM (INTEGRAL TO LOAD)
PCS2 - PACKAGED CONTROL SYSTEM (SEPARATE FROM LOAD)
MCC - MOTOR CONTROL CENTRE
MDC - MOTOR DISTRIBUTION CENTRE (FOUR PLEX OR SIMILAR SMALL GROUPED MOTOR CONTROL)
CDP - CENTRAL DISTRIBUTION PANEL
LOOSE - INDIVIDUALLY MOUNTED MOTOR STARTER/RELAY

CONTROLS
BAS - BUILDING AUTOMATION SYSTEM
CP - SYSTEM CONTROL PANEL
ES - END SWITCH
ET - ELECTRONIC THERMOSTAT
FA - FIRE ALARM
FS - FLOW SWITCH
GS - GAS SENSOR
H - HUMIDITY SENSOR
I - INTERLOC
LVS - LEVEL SWITCH
PS - PRESSURE SWITCH
TC - TIME CLOCK
T - THERMOSTAT OR SPACE SENSOR
TS - TAMPER SWITCH
VS - VARIABLE SPEED SWITCH
WS - WALL SWITCH

ACCESSORIES:
HOA - HAND-OFF-AUTO SWITCH
SFOA - SLOW-FAST-OFF-AUTO SWITCH
PLR - RUN PILOT LIGHT
PLO - OFF PILOT LIGHT
TRB - TRIP RESET PUSHBUTTON
MTR - c/w INTERGRAL ENERGY METERING
STD - STANDARD (HOA, PLR, PLO, PLT, TRB)

POWER SOURCES:
N - NORMAL (NON-EMERGENCY) SOURCE
FP - FIRE PUMP SOURCE
LS - LIFE SAFETY SOURCE
NLS - NON-LIFE SAFETY SOURCE

NOTE:
SCHEDULE VALUES ARE PROVIDED TO ALLOW FOR PRICING ONLY. PRIOR TO ORDERING ELECTRICAL EQUIPMENT THE CONTRACTOR IS TO CONFIRM THESE VALUES WITH MECHANICAL SHOP DRAWINGS AND NAMEPLATE VALUES AND MAKE ADJUSTMENTS TO ELECTRICAL CIRCUIT SUPPLY, CONTROL AND PROTECTION AS NECESSARY

Stantec

Stantec Consulting Ltd.
301, 1919 Rose Street
Regina SK Canada
S4P 3P1
Tel. 306.781.6400
Fax. 306.781.6500

Consultants

Legend

Notes

Revision	By	Appd.	YY.MM.DD
ISSUED FOR TENDER & CONSTRUCTION	KAL	KAL	16.04.15

Issued	By	Appd.	YY.MM.DD
File Name: 144401453c_e6.1.dwg	KAL	IW	KAL	16.02.18
	Dwn.	Chkd.	Dsgn.	YY.MM.DD

Permit-Seal

PROFESSIONAL ENGINEER — Kerry Lamb — K.A. LAMB — MEMBER 12649 — 16 04 14 — YR. MN. DAY — SASKATCHEWAN

Association of Professional Engineers & Geoscientists of Saskatchewan
CERTIFICATE OF AUTHORIZATION
Stantec Consulting Ltd.
NUMBER : C069
PERMISSION TO CONSULT HELD BY:

DISCIPLINE	SASK. REG. No.	SIGNATURE
ELECTRICAL	12649	Kerry Lamb

Client/Project
GOVERNMENT OF CANADA

UPGRADES TO TBU 61

Regina, Saskatchewan

Title
ELECTRICAL SINGLE LINE DIAGRAM AND SCHEDULES

Project No.	Scale	
144401453	NTS	
Drawing No.	**Sheet**	**Revision**
E6.1	4 of 5	0

Switchboard: 6-ES-SG-1

Location: ELECTRICAL ROOM | **Volts:** 347/600 | **A.I.C. Rating:** 50 KAIC
Supply From: 124-5-TR | **Phases:** 3 | **Mains Type:** COPPER
Mounting: FLOOR | **Wires:** 4 | **Mains Rating:** 800 A
Enclosure: TYPE 1 | **MCB Rating:** 600 A

Notes: REFER TO SPECIFICATION SECTION 26 24 13 AND DRAWING E6.1 DETAIL 4 FOR SERVICE ENTRANCE CONTROL REQUIREMENTS.

CKT	Circuit Description	# of Poles	Frame Size	Trip Rating	Load	Remarks
1	6-NP-SG-1	3	800 A	600 A	370788 VA	
2	ESSENTIAL	1	–	100 A	0 VA	
3						
4						
5						
6						
7						
8						
9						
10						
11						
12						
13						
14						
15						
16						
17						
18						
19						
20						
21						
22						
23						
24						
				Total Conn. Load:	370788 VA	
				Total Amps:	357 A	

Legend:

Switchboard: 6-NP-SG-1

Location: ELECTRICAL ROOM | **Volts:** 347/600 | **A.I.C. Rating:** 50 KAIC
Supply From: 6-ES-SG-1 | **Phases:** 3 | **Mains Type:** COPPER
Mounting: FLOOR | **Wires:** 4 | **Mains Rating:** 800 A
Enclosure: TYPE 1 | **MCB Rating:** 600 A

Notes:

CKT	Circuit Description	# of Poles	Frame Size	Trip Rating	Load	Remarks
1	TX-225	3	225 A	225 A	0 VA	
2	6-MCC-1	3	225 A	225 A	140788 VA	
3	STREET LTS	3	60 A	30 A	0 VA	
4	CH-1	3	400 A	350 A	230000 VA	
5						
6						
7						
8						
9						
10						
11						
12						
13						
14						
15						
16						
17						
18						
19						
20						
21						
22						
23						
24						
				Total Conn. Load:	370788 VA	
				Total Amps:	357 A	

Legend:

Switchboard: CDP1

Location: ELECTRICAL ROOM | **Volts:** 120/208 | **A.I.C. Rating:**
Supply From: 2-ES-SG-1 | **Phases:** 3 | **Mains Type:** COPPER
Mounting: | **Wires:** 4 | **Mains Rating:** 1600 A
Enclosure: | **MCB Rating:**

Notes:

CKT	Circuit Description	# of Poles	Frame Size	Trip Rating	Load	Remarks
1	1A	3	–	100 A	0 VA	
2	1B	3	–	100 A	0 VA	
3	1C	3	–	100 A	0 VA	
4	1D	3	–	100 A	0 VA	
5	2A	3	–	100 A	0 VA	
6	2B	3	–	100 A	0 VA	
7	2C	3	–	100 A	0 VA	
8	2D	3	–	100 A	0 VA	
9	3A	3	–	100 A	0 VA	
10	3B	3	–	100 A	0 VA	
11	3C	3	–	100 A	0 VA	
12	3D	3	–	100 A	0 VA	
13	4A	3	–	100 A	0 VA	
14	4B	3	–	100 A	0 VA	
15	4C	3	–	100 A	0 VA	
16	4D	3	–	100 A	0 VA	
17						
18						
19						
20						
21						
22						
23						
24						
				Total Conn. Load:	0 VA	
				Total Amps:	0 A	

Legend:
EXISTING CDP STRUCTURE A.

Switchboard: CDP1

Location: ELECTRICAL ROOM | **Volts:** 120/208 | **A.I.C. Rating:**
Supply From: | **Phases:** 3 | **Mains Type:** COPPER
Mounting: FLOOR | **Wires:** 4 | **Mains Rating:** 1600 A
Enclosure: TYPE 1 | **MCB Rating:**

Notes:

CKT	Circuit Description	# of Poles	Frame Size	Trip Rating	Load	Remarks
1	MECHANICAL ROOM	3	–	70 A	0 VA	
2	ELEVATOR	3	–	150 A	0 VA	
3	LAUNDRY	3	–	100 A	0 VA	
4	SPARE	3	–	100 A	0 VA	
5	CAR PLUGS	3	–	100 A	0 VA	
6	CAR PLUGS	3	–	100 A	0 VA	
7	SPACE	–	–	–	0 VA	–
8	SPACE	–	–	–	0 VA	–
9	PANEL IG	3	–	100 A	0 VA	
10	VENTILATION DISCONNECT	3	–	350 A	0 VA	SPARE AS A RESULT OF DEMO
11	SPARE	3	–	100 A	0 VA	
12	RF-1	3	40 A	40 A	11190 VA	NEW
13	PANEL E	3	–	100 A	0 VA	
14	PANEL F	3	225 A	150 A	1548 VA	
15	PANEL H	3	225 A	150 A	2738 VA	
16	STREET LIGHTING DISCONNECT	3	–	100 A	0 VA	
17	CAR PLUGS	3	–	150 A	0 VA	
18	CAR PLUGS	3	–	150 A	0 VA	
19	SPACE	–	–	–	0 VA	–
20	SPACE	–	–	–	0 VA	–
21	SPACE	–	–	–	0 VA	–
22	SPARE	3	–	100 A	0 VA	
23	SPACE	–	–	–	0 VA	–
24	SPACE	–	–	–	0 VA	–
				Total Conn. Load:	16037 VA	
				Total Amps:	45 A	

Legend:
EXISTING CDP STRUCTURE B.

Switchboard: 2-ES-SG-1

Location: ELECTRICAL ROOM | **Volts:** 120/208 | **A.I.C. Rating:** 42 KAIC
Supply From: 124-6-TR | **Phases:** 3 | **Mains Type:** COPPER
Mounting: FLOOR | **Wires:** 4 | **Mains Rating:** 1600 A
Enclosure: TYPE 1 | **MCB Rating:** 1000 A

Notes:

CKT	Circuit Description	# of Poles	Frame Size	Trip Rating	Load	Remarks
1	CDP1	3	1600 A	1000 A	0 VA	**
2	ESSENTIAL (FUTURE)	3	–	400 A	0 VA	
3						
4						
5						
6						
				Total Conn. Load:	0 VA	
				Total Amps:	0 A	

Legend:
** MODIFY MAIN BREAKER AND CDP1 LONG TIME TRIP SETTING TO 0.8.

Branch Panel: F

Location: MECHANICAL ROOM | **Volts:** 120/208 | **A.I.C. Rating:** 10 KAIC
Supply From: CDP1 | **Phases:** 3 | **Bussing:** COPPER
Mounting: SURFACE | **Wires:** 4 | **Mains Rating:** 225 A
Enclosure: | **MCB Rating:** NONE

CKT	Circuit Description	Trip	Poles	A		B		C		Poles	Trip	Circuit Description	CKT
1	LIGHTS CORRIDOR	15 A	1	0 VA	0 VA								2
3	LIGHTS MECHANICAL ROOM	15 A	1			0 VA	0 VA			3	15 A	EXCH FAN #6	4
5	LIGHTS STORAGE AND TELEPHONE	15 A	1					176 VA	0 VA				6
7	LIGHTS	15 A	1	0 VA	0 VA					1	15 A	IRRIGATION	8
9	RECEPTACLES CORRIDOR	15 A	1			0 VA	0 VA			1	15 A	SPRINGLER PUMP	10
11	RECEPTACLES MECHANICAL RM	15 A	1					0 VA	0 VA	1	15 A	GLYCOL PUMP	12
13	RECEPTACLES MECHANICAL RM	15 A	1	0 VA	500 VA					1	15 A	F-1	14
15	RECEPTACLES TELEPHONE RM	15 A	1			0 VA	500 VA			1	15 A	RD-1	16
17	RECEPTACLES ELECTRICAL RM	15 A	1					0 VA	540 VA	1	15 A	CHILLER ROOM RECEPTACLES	18
19	RECEPTACLES STORAGE RM	15 A	1	0 VA	0 VA					1	15 A	CHILLER RM SUMP HEAT TRACE (GFCI)	20
21	RECEPTACLES CRAWL SPACE	15 A	1			0 VA	187 VA			2	20 A	SUMP PUMP P-6A/B	22
23	CONTACTOR PANEL	15 A	1					0 VA	187 VA				24
25	COMPRESSOR	15 A	1	0 VA									26
27													28
29													30
			Total Load:	500 VA		687 VA		903 VA					
			Total Amps:	4 A		6 A		8 A					

Load Classification	Connected Load	Demand Factor	Estimated Demand	Panel Totals	
Lighting	176 VA	125.00%	220 VA		
Motor	500 VA	125.00%	625 VA	Total Conn. Load:	2089 VA
Power	540 VA	100.00%	540 VA	Total Est. Demand:	2258 VA
Mechanical Pump	873 VA	100.00%	873 VA	Total Conn.:	6 A
				Total Est. Demand:	6 A
				Non-Coincident.:	0 A
				Total Est. Demand - N.C.:	6 A

Notes:
EXISTING PANEL. CIRCUITS 12, 14,1 6, 18, 20, 22, AND 24 ARE NEW.

Branch Panel: H

Location: | **Volts:** 120/208 | **A.I.C. Rating:** 10 KAIC
Supply From: CDP1 | **Phases:** 3 | **Bussing:** COPPER
Mounting: SURFACE | **Wires:** 4 | **Mains Rating:** 225 A
Enclosure: | **MCB Rating:** NONE

CKT	Circuit Description	Trip	Poles	A		B		C		Poles	Trip	Circuit Description	CKT
1	LIGHTS - NORTH CRAWL SPACE	15 A	1	0 VA	0 VA					1	15 A	RECEPTACLES FAN RM	2
3	LIGHTS - NORTH CRAWL SPACE	15 A	1			0 VA	0 VA			1	15 A	RECEPTACLES FAN RM	4
5	LIGHTS - NORTH CRAWL SPACE	15 A	1					0 VA	0 VA	1	15 A	RECEPTACLES ELEVATOR RM	6
7	LIGHTS - NORTH CRAWL SPACE	15 A	1	0 VA	0 VA					1	15 A	RECEPTACLES ELEVATOR PIT	8
9	LIGHTS - NORTH CRAWL SPACE	15 A	1			0 VA	0 VA			1	15 A	MECHANICAL ROOM EXHAUST	10
11	LIGHTS - EAST CRAWL SPACE	15 A	1					0 VA	0 VA	1	15 A	RECEPTACLES EAST CRAWL SPACE	12
13	LIGHTS - EAST CRAWL SPACE	15 A	1	0 VA	0 VA					1	15 A	RECEPTACLES NORTH CRAWL SPACE	14
15	LIGHTS - FAN ROOM	15 A	1			0 VA	0 VA						16
17	LIGHTS - SOUTH CRAWL SPACE	15 A	1					0 VA	0 VA	3	15 A	AIR CONDITIONER	18
19	LIGHTS - SOUTH CRAWL SPACE	15 A	1	0 VA	0 VA								20
21	LIGHTS - SOUTH CRAWL SPACE	15 A	1			0 VA	187 VA			2	20 A	P-1A/B	22
23	LIGHTS - SOUTH CRAWL SPACE	15 A	1					0 VA	187 VA				24
25	LIGHTS - SOUTH CRAWL SPACE	15 A	1	0 VA	187 VA					2	20 A	P-2A/B	26
27	LIGHTS - ELEVATOR ROOM & PIT	15 A	1			0 VA	187 VA						28
29	DRYER EXHAUST FAN/LAUNDRY	0 A	1					0 VA	187 VA	2	20 A	P-3A/B	30
31	DRYER EXHAUST FAN/LAUNDRY	0 A	2	0 VA	187 VA								32
33						0 VA	187 VA			2	20 A	P-4A/B	34
35	EXIT SIGNAGE/EGRESS LIGHTING	15 A	1					20 VA	187 VA				36
37	P-7A/B	20 A	2	187 VA	187 VA					2	20 A	P-5A/B	38
39						187 VA	187 VA						40
41	SUPPLY AIR INTAKE HEATING CABLE	15 A	1					0 VA	500 VA	1	15 A	HUMIDIFIER HUM-1	42
			Total Load:	746 VA		933 VA		1080 VA					
			Total Amps:	6 A		8 A		9 A					

Load Classification	Connected Load	Demand Factor	Estimated Demand	Panel Totals	
Motor	500 VA	125.00%	625 VA		
Mechanical Pump	2238 VA	100.00%	2238 VA	Total Conn. Load:	2758 VA
Exit Sign	20 VA	100.00%	20 VA	Total Est. Demand:	2883 VA
				Total Conn.:	8 A
				Total Est. Demand:	8 A
				Non-Coincident.:	0 A
				Total Est. Demand - N.C.:	8 A

Notes:
EXISTING PANEL. CIRCUITS 22, 24, 26, 28, 30, 32, 34, 35, 36, 37, 38, 39, 40, 41 AND 42 ARE NEW.

Stantec

Stantec Consulting Ltd.
301, 1919 Rose Street
Regina SK Canada
S4P 3P1
Tel. 306.781.6400
Fax. 306.781.6500

Consultants

Legend

Notes

Revision	By	Appd.	YY.MM.DD
ISSUED FOR TENDER & CONSTRUCTION	KAL	KAL	16.04.15

Issued	By	Appd.	YY.MM.DD
File Name: 144401453c_e6.2.dwg	KAL Dwn.	IW Chkd.	KAL Dsgn.
			16.02.18

Permit-Seal

PROFESSIONAL ENGINEER K.A. LAMB MEMBER 12649 16 04 14 SASKATCHEWAN

Association of Professional Engineers & Geoscientists of Saskatchewan
CERTIFICATE OF AUTHORIZATION
Stantec Consulting Ltd.
NUMBER : C0619
PERMISSION TO CONSULT HELD BY:

DISCIPLINE	SASK. REG. No.	SIGNATURE
ELECTRICAL	12649	

Client/Project
GOVERNMENT OF CANADA

UPGRADES TO TBU 61

Regina, Saskatchewan

Title
ELECTRICAL PANEL SCHEDULES

Project No.	Scale	
144401453	NTS	
Drawing No.	Sheet	Revision
E6.2	5 of 5	0

\\ca1hd4-f01\shared_projects\144401453\electrical\drawings\web\144401453c_e6.2.dwg
By: Lamb, Kerry

ORIGINAL SHEET - ISO A0

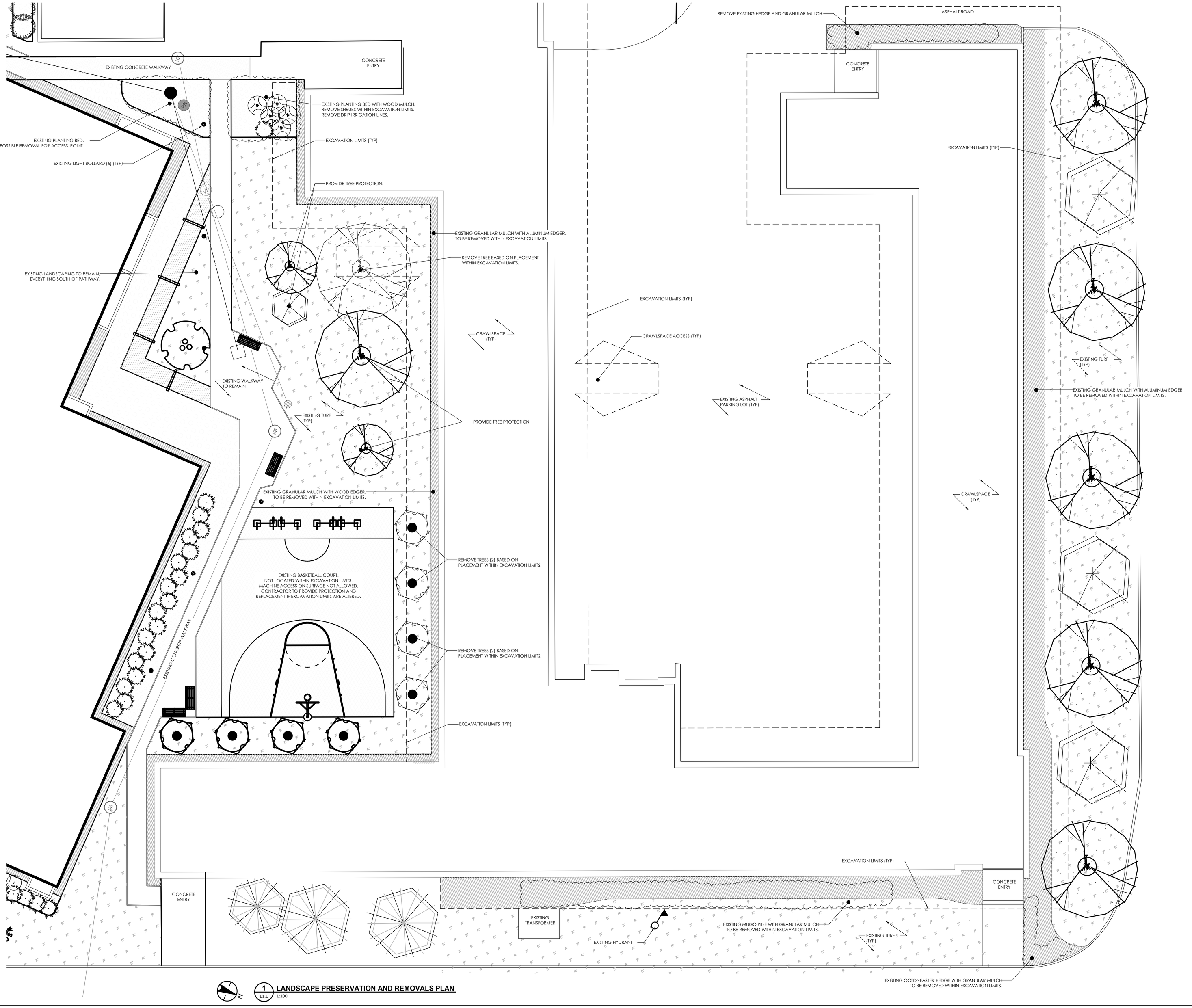

1 L1.1 **LANDSCAPE PRESERVATION AND REMOVALS PLAN**
1:100

ORIGINAL SHEET - ISO A0

Stantec

Stantec Consulting Ltd.
301, 1919 Rose Street
Regina SK Canada
S4P 3P1
Tel. 306.781.6400
Fax. 306.781.6500

Consultants

Legend

- GRANULAR MULCH PEA ROCK WITH ALUMINUM EDGER
- SOD - KENTUCKY BLUEGRASS MIX
- EXISTING ASH TREE
- EXISTING ELM TREE
- EXISTING SWEDISH COLUMNAR ASPEN TREE
- EXISTING SPRUCE TREE
- EXISTING SHRUB BEDS

Notes

1. REMOVE ALL SOFT LANDSCAPING WITHIN EXCAVATION LIMITS - TURF, PLANT MATERIALS AND WOOD MULCH, GRANULAR MULCH AND ALUMINUM EDGER, IRRIGATION HEADS, LATERAL LINES AND DRIP LINES AS NOTED.
2. REFER TO L-3.0 IRRIGATION PLAN FOR REFERENCE TO HEAD LAYOUT.
3. ALL IRRIGATION HEADS REMOVED ARE TO BE STORED FOR REUSE.
4. REFER TO A2.0 SITE INFORMATION PLAN FOR SHALLOW UTILITY PLACEMENTS.

Revision	By	Appd.	YY.MM.DD
1. ISSUED FOR TENDER & CONSTRUCTION	B.W.	C.P.	16.04.15

Issued	By	Appd.	YY.MM.DD
File Name: 1453l_sp_dsgn.dwg			16.02.19
	Dwn.	Chkd.	Dsgn. YY.MM.DD

Permit-Seal

The Saskatchewan Association of Landscape Architects
BRAD WILSON
16 04 15
MEMBER

Client/Project
GOVERNMENT OF CANADA

UPGRADES TO TBU 61

Regina, Saskatchewan

Title
VEGETATION PRESERVATION AND REMOVALS PLAN

Project No.	Scale	
144401453	1:100	
Drawing No.	Sheet	Revision
L1.0	1 of 3	0

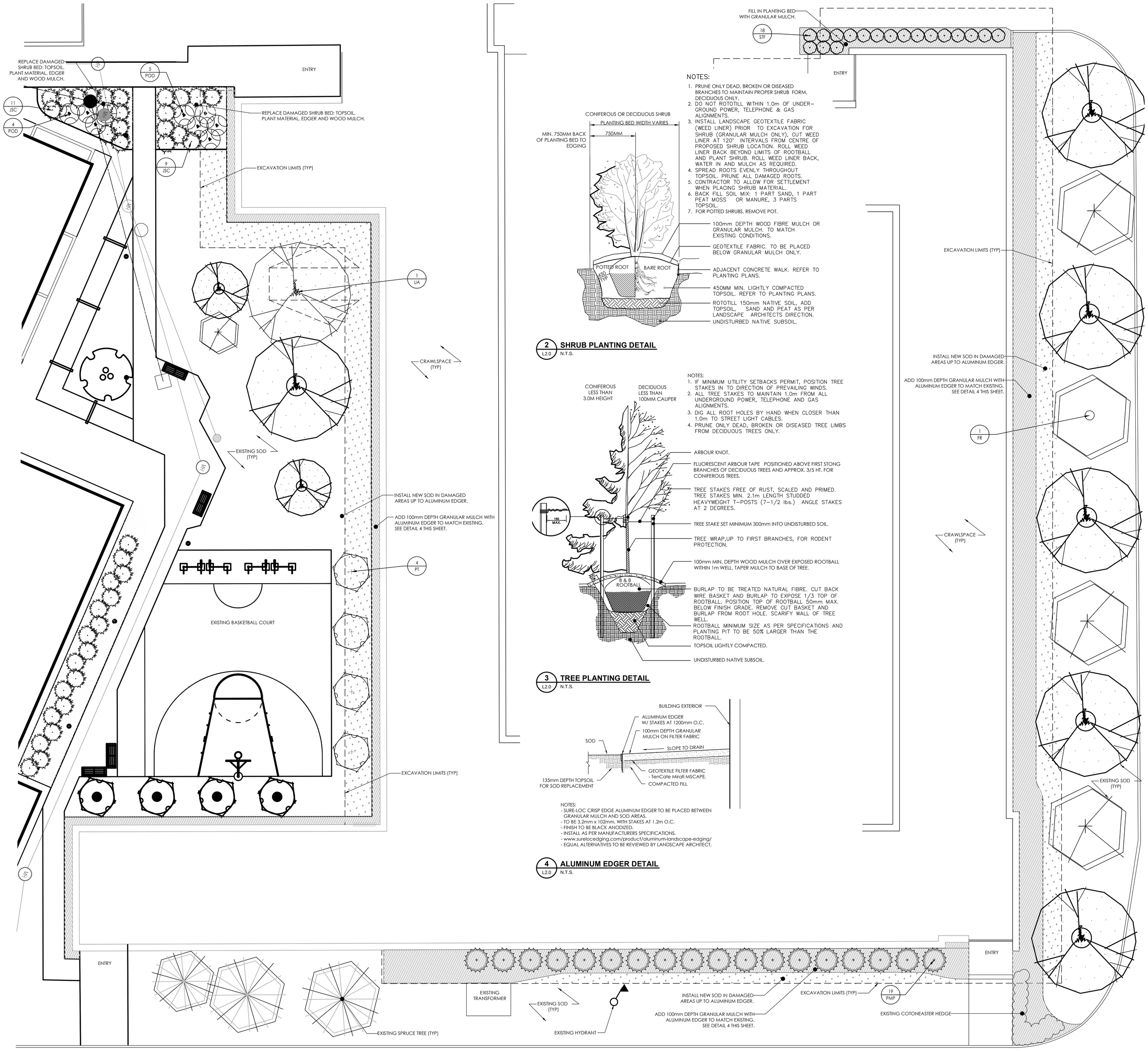

1 LANDSCAPE PLAN
L2.0 1:100

NOTES:

1. PRUNE ONLY DEAD, BROKEN OR DISEASED BRANCHES TO MAINTAIN PROPER SHRUB FORM. DECIDUOUS ONLY.
2. DO NOT ROTOTILL WITHIN 1.0m OF UNDER-GROUND POWER, TELEPHONE & GAS ALIGNMENTS.
3. INSTALL LANDSCAPE GEOTEXTILE FABRIC (WEED LINER) PRIOR TO EXCAVATION FOR SHRUB (GRANULAR MULCH ONLY). CUT WEED LINER AT 120° INTERVALS FROM CENTRE OF PROPOSED SHRUB LOCATION. ROLL WEED LINER BACK BEYOND LIMITS OF ROOTBALL AND PLANT SHRUB. ROLL WEED LINER BACK, WATER IN AND MULCH AS REQUIRED.
4. SPREAD ROOTS EVENLY THROUGHOUT TOPSOIL. PRUNE ALL DAMAGED ROOTS.
5. CONTRACTOR TO ALLOW FOR SETTLEMENT WHEN PLACING SHRUB MATERIAL.
6. BACK FILL SOIL MIX: 1 PART SAND, 1 PART PEAT MOSS OR MANURE, 3 PARTS TOPSOIL.
7. FOR POTTED SHRUBS, REMOVE POT.

2 SHRUB PLANTING DETAIL
L2.0 N.T.S.

NOTES:

1. IF MINIMUM UTILITY SETBACKS PERMIT, POSITION TREE STAKES IN TO DIRECTION OF PREVAILING WINDS.
2. ALL TREE STAKES TO MAINTAIN 1.0m FROM ALL UNDERGROUND POWER, TELEPHONE AND GAS ALIGNMENTS.
3. DIG ALL ROOT HOLES BY HAND WHEN CLOSER THAN 1.0m TO STREET LIGHT CABLES.
4. PRUNE ONLY DEAD, BROKEN OR DISEASED TREE LIMBS FROM DECIDUOUS TREES ONLY.

3 TREE PLANTING DETAIL
L2.0 N.T.S.

NOTES:
- SURE-LOC CRISP EDGE ALUMINUM EDGER TO BE PLACED BETWEEN GRANULAR MULCH AND SOD AREAS.
- TO BE 3.2mm x 102mm, WITH STAKES AT 1.2m O.C.
- FINISH TO BE BLACK ANODIZED.
- INSTALL AS PER MANUFACTURERS SPECIFICATIONS.
- www.sureloedging.com/product/aluminum-landscape-edging/
- EQUAL ALTERNATIVES TO BE REVIEWED BY LANDSCAPE ARCHITECT.

4 ALUMINUM EDGER DETAIL
L2.0 N.T.S.

PLANT MATERIAL LIST :

QTY. SYM.	BOTANICAL COMMON NAME	SIZE	CONDITION
TREES			
1 FR	*Fraxinus pennsylvanica 'Rugby'* PRAIRIE SPIRE ASH	60mm CAL.	B & B.
4 PT	*Populus tremula 'Erecta'* SWEDISH COLUMNAR ASPEN	50mm CAL.	B & B. 4.5m SPACING
1 UA	*Ulmus americana 'Brandon'* BRANDON ELM	60mm CAL.	B & B.
SHRUBS			
20 JSC	*Juniperus sabina 'Calgary Carpet'* CALGARY CARPET JUNIPER	550mm SPR.	#2 CONT., 1.15m SPACING.
9 POD	*Physocarpus opulifolius 'Darts Gold'* DARTS GOLD NINEBARK	450mm HT.	#2 CONT., 1.2m SPACING.
19 PMP	*Pinus mugo 'pumilio'* DWARF MUGO PINE	550mm SP.	#2 CONT., 2.0m SPACING.
18 STF	*Spiraea trilobata 'Fairy Queen'* FAIRY QUEEN SPIREA	450mm HT.	#2 CONT., 1.0m SPACING.

PLANTING NOTES:

1. CONTRACTOR TO HAVE EXISTING UTILITIES LOCATED PRIOR TO START OF ANY CONSTRUCTION.
2. CONTRACTOR IS RESPONSIBLE FOR THE HOARDING OF ALL TREES WITHIN OR ADJACENT TO THE CONSTRUCTION AREAS.
3. CONTRACTOR IS RESPONSIBLE FOR THE ADJUSTMENT OF ALL EXISTING CATCH BASINS, CATCH BASIN MANHOLES, MANHOLES, WATER VALVES, HYDRANTS, ETC. TO MATCH PROPOSED GRADES.
4. CONTRACTOR TO SUPPLY AND INSTALL 12mm FIBRE MASTIC JOINT WHENEVER MATCHING TO OR ABUTTING TO ANY CONCRETE OR BUILDING OFF THE SITE.
5. CONTRACTOR IS RESPONSIBLE FOR HAULING OF ALL EXCESS MATERIALS.
6. CONTRACTOR IS RESPONSIBLE FOR GENERAL SITE CLEAN UP.
7. CONTRACTOR IS RESPONSIBLE FOR ANY DAMAGE TO LANDSCAPED AREAS AND MUST MAKE ALL NECESSARY RESTORATIONS AND REPAIRS.
8. ALL ANCILLARY WORK NORMALLY ASSOCIATED WITH THIS TYPE OF CONSTRUCTION SHALL BE DEEMED TO BE PART OF THE CONTRACT.
9. ALL QUANTITIES ARE APPROXIMATE ONLY.
10. CONTRACTOR TO VERIFY ALL DIMENSIONS AND REPORT ANY DISCREPANCIES TO THE LANDSCAPE ARCHITECT.
11. LAYOUT TO BE APPROVED BY LANDSCAPE ARCHITECT PRIOR TO CONSTRUCTION STARTING.
12. ALL MEASUREMENTS ARE IN METRES UNLESS OTHERWISE NOTED.
13. CONTRACTOR TO OBTAIN APPROVAL FOR PLANT MATERIAL LAYOUT. NO SUBSTITUTIONS OF MATERIALS, PRODUCTS OR QUANTITIES WITHOUT PRIOR CONSENT OF LANDSCAPE ARCHITECT AND CITY OF REGINA.
14. CONTRACTOR TO HOLD ROUGH GRADES:
    500mm BELOW FINISHED GRADE FOR PLANT BEDS.
    150mm BELOW FINISHED GRADE FOR SEEDED AREAS.
    150mm BELOW FINISHED GRADE FOR SODDED AREAS.
15. TOPSOIL DEPTHS:
    500mm FOR ALL PLANT BEDS.
    150mm FOR ALL SEEDED AREAS.
    135mm FOR ALL SODDED AREAS.
16. ALL PLANTING BEDS TO RECEIVE 100mm DEPTH OF WOOD FIBRE MULCH. INDIVIDUAL TREES IN IRRIGATED AREAS ARE NOT TO BE MULCHED.
17. ALL PLANT MATL. TO BE NURSERY GROWN STOCK AND SHALL MEET OR EXCEED THE SPECIFICATIONS OF THE CANADIAN NURSERY TRADES ASSOC. FOR SIZE, HEIGHT, SPREAD, GRADING, QUALITY, AND METHOD OF CULTIVATION.
18. ALL PLANT MATERIAL AND CONSTRUCTION TO ADHERE TO THE CITY OF REGINA DEVELOPMENT STANDARDS MANUAL (2010), TO THE STANDARD CONSTRUCTION SPECIFICATIONS (2011), AND TO THE REGINA URBAN FOREST MANAGEMENT STRATEGY MANUAL.
19. PLANT BEDS TO BE RAISED 150mm ABOVE FINISHED GRADE ON SHT. L-5.
20. ADD TREE GUARD FOR WINTER PROTECTION. SEE CITY OF REGINA SPECIFICATIONS.
21. PLANTING SETBACKS FROM WALKWAYS:
    1.0m O.C. FOR 1.5m SPACED SHRUBS.
    0.75m O.C. FOR 1.0m SPACED SHRUBS.
    1.2m O.C. FOR SPREADING CONIFEROUS SHRUBS.

SETBACKS

LANDSCAPE CONTRACTOR TO LOCATE ALL SITE UTILITIES PRIOR TO CONSTRUCTION. ANY PLANT MATERIAL PLACED WITHIN THESE SETBACKS TO HAVE THE METHOD OF INSTALLATION REVIEWED AND APPROVED BY MANAGER OF FORESTRY, HORTICULTURE AND PEST CONTROL AND THE LANDSCAPE ARCHITECT.

1. 5.0m FROM MAJOR UNDERGROUND UTILITIES (MAIN GAS LINES, PRIMARY CABLES - 14,000 VOLTS AND CONCRETE DUCTS).
2. 2.0m FROM UNDERGROUND UTILITIES (SEWER, WATER, GAS LINES, SECONDARY CABLES - 240 VOLTS AND TELEPHONE LINES).
3. 2.0m FROM FIRE HYDRANTS.
4. 5.0m FROM STREET LIGHTS.
5. 1.0m FROM STREET LIGHT CABLES.
6. 5.0m FROM YIELD / STOP AND ALL REGULATORY SIGNS.
7. 10.0m FROM STREET CORNERS.
8. 4.5m FROM ALLEYS.
9. 2.0m FROM DRIVEWAYS.
10. 2.0m FROM BUS STOP.
11. PRIVATE PROPERTY 10.0m - POPLARS
    5.0m - ALL OTHER TREES
12. OVERHEAD POWER TREES 10.0m OR HIGHER - 10.0m OFFSET
    TREES 10.0m OR LESS - 5.0m OFFSET

LANDSCAPE CONTRACTOR IS RESPONSIBLE FOR DAMAGES AND LIABILITIES INCURRED BY DAMAGES TO SITE UTILITIES.

AREAS : PHASE 4 MR-2

TOTAL RESTORED SOD AREA (EXCAVATION LIMITS)	248m²
TOTAL SHRUB BED AREA (500mm DEPTH TOPSOIL)	150m²
TOTAL WOOD MULCH AREA	48m²
TOTAL GRANULAR MULCH AREA	300m²
TOTAL NUMBER OF DECIDUOUS TREES	6
TOTAL NUMBER OF SHRUBS	66

Stantec

Stantec Consulting Ltd.
301, 1919 Rose Street
Regina SK Canada
S4P 3P1
Tel. 306.781.6400
Fax. 306.781.6500

Consultants

Legend

PLANT REFERENCE SYMBOL

99 AA — QUANTITY / PLANT SYMBOL

GRANULAR MULCH / PEA ROCK WITH ALUMINUM EDGER

SOD - KENTUCKY BLUEGRASS MIX

EXISTING ASH TREE

EXISTING ELM TREE

EXISTING SWEDISH COLUMNAR ASPEN TREE

EXISTING SPRUCE TREE

Notes

1. REPLACE ALL DAMAGED SOFT LANDSCAPING TO EXISTING CONDITIONS OR AS NOTED ON THE DRAWINGS.
2. SOD TO BE INSTALLED IN DAMAGED TURF AREAS.
3. GRANULAR MULCH TO BE PEA ROCK - 15mm MINUS IN SIZE
4. ALUMINUM EDGER TO BE PLACED ALONG GRANULAR MULCH.
5. PLANT MATERIAL AS NOTED ON DRAWINGS.
6. IRRIGATION NOTED ON L3.0.
7. REFER TO A2.0 SITE INFORMATION PLAN FOR SHALLOW UTILITY PLACEMENTS.

Revision	By	Appd.	YY.MM.DD
1. ISSUED FOR TENDER & CONSTRUCTION	B.W.	C.P.	16.04.15

Issued	By	Appd.	YY.MM.DD
File Name: 145ZR_sp_dlgn.dwg	Dwn.	Chkd.	Dsgn.
			16.02.19

Permit-Seal

Saskatchewan Association of Landscape Architects — BRAD WILSON — 16 04 15 — MEMBER

Client/Project
GOVERNMENT OF CANADA

UPGRADES TO TBU 61

Regina, Saskatchewan

Title
LANDSCAPE PLAN AND DETAILS

Project No.	Scale	
144401453	1:100	
Drawing No.	**Sheet**	**Revision**
L2.0	2 of 3	0

U:\144401453-mill-(drawings)\145ZR_sp_dlgn.dwg
2016/04/15 9:52 AM By: Wilson, Brad

ORIGINAL SHEET - ISO A0

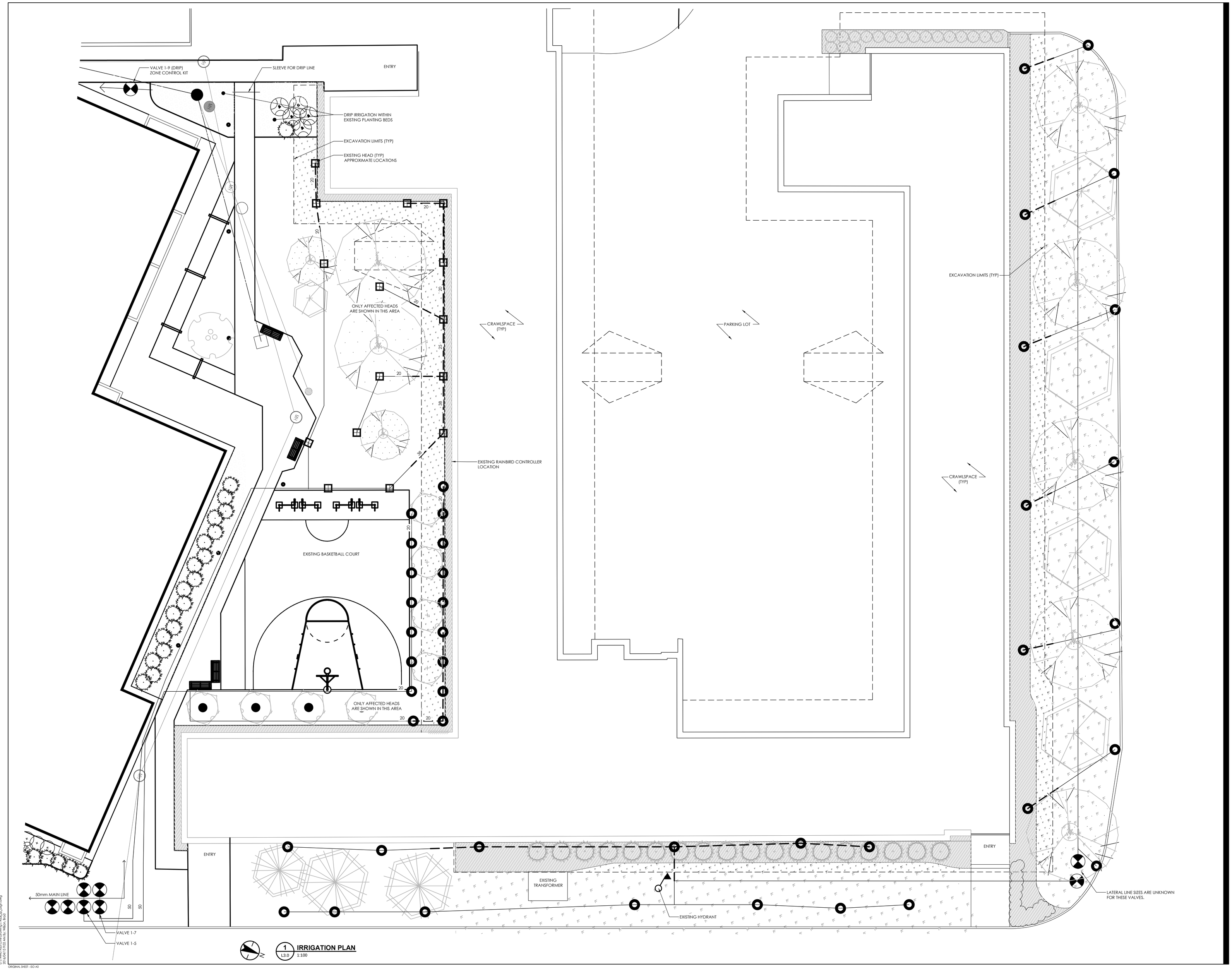

Stantec

Stantec Consulting Ltd.
301, 1919 Rose Street
Regina SK Canada
S4P 3P1
Tel. 306.781.6400
Fax. 306.781.6500

Consultants

Legend

- EXISTING HEADS
- EXISTING VALVE
- EXISTING LATERAL LINE, 50, 38, 25 OR 20mm.
- POSSIBLE REPLACEMENT LATERAL LINE
- GRANULAR MULCH
- SOD

Notes

- IRRIGATION LAYOUT SHOWN ON THIS PLAN IS APPROXIMATE. TO BE USED FOR INFORMATION ONLY. RECORD AS-BUILTS AVAILABLE.
- SITE INSPECTION IS RECOMMENDED TO CONFIRM DESIGN.
- REFER TO A2.0 SITE INFORMATION PLAN FOR SHALLOW UTILITY PLACEMENTS.

GENERAL - THE REPAIRS TO THE IRRIGATION SYSTEM ARE TO REFLECT THE INTENT OF THE EXISTING IRRIGATION SYSTEM AS NOTED ON THE IRRIGATION DRAWING.

- ALL IRRIGATION HEADS WITHIN THE EXCAVATION LIMITS ARE TO BE SALVAGED BEFORE EXCAVATION BEGINS. THESE HEADS ARE TO BE TURNED OVER TO MAINTENANCE PERSONNEL.
- ALL IRRIGATION LINES THAT ARE EXPOSED DURING EXCAVATION ARE TO BE MARKED FOR RE-CONNECTION DURING THE LANDSCAPING PHASE.
- AFTER THE EXCAVATION HAS BEEN BACKFILLED THE CONTRACTOR IS TO REPLACE ALL MISSING HEADS WITH THE SAME OR EQUIVALENT TYPE HEAD COMPLETE WITH GALLONAGE AND DISTANCE REQUIREMENTS.
- SCH-80 PVC INSERT COUPLERS C/W STAINLESS STEEL GEAR CLAMPS ARE TO BE USED TO CONNECT ALL NEW PIPING TO EXISTING PIPING.
- ALL NEW PIPING SHALL BE SERIES 75 POLY PIPE. IN THE EVENT THE EXISTING PIPE IS PVC THEN REPLACE WITH THE SAME OR BETTER.
- ALL NEW HEADS ARE TO BE ON SCH-80 PVC SWING JOINTS WITH POSITIVE DRAINAGE.

Revision	By	Appd.	YY.MM.DD
1. ISSUED FOR TENDER & CONSTRUCTION	B.W.	C.P.	16.04.15

Issued	By	Appd.	YY.MM.DD
File Name: 1453l_sp_dtgn.dwg			16.02.19
	Dwn.	Chkd.	Dsgn.	YY.MM.DD

Permit-Seal

The Saskatchewan Association of Landscape Architects
BRAD WILSON
16 04 15
MEMBER

Client/Project

GOVERNMENT OF CANADA

UPGRADES TO TBU 61

Regina, Saskatchewan

Title

IRRIGATION DRAWING AND NOTES

Project No.	Scale	
144401453	1:100	
Drawing No.	Sheet	Revision
L3.0	3 of 3	0

ORIGINAL SHEET - ISO A0