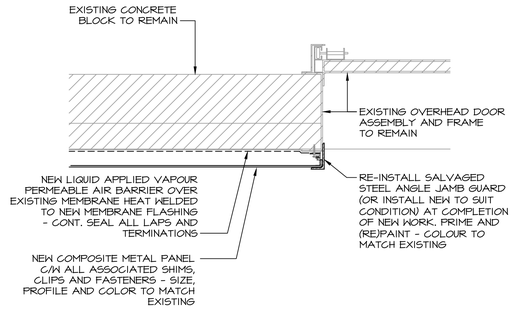

SEE DETAIL 7/A8.4 FOR DEMOLITION WORK

O.H. DOOR AT LOADING DOCK - NEW WORK (8 / A8.4)

SCALE : 1:10

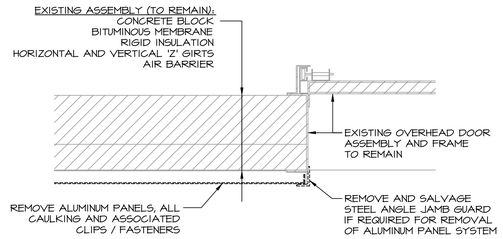

SEE DETAIL 8/A8.4 FOR NEW WORK

O.H. DOOR AT LOADING DOCK - DEMOLITION (7 / A8.4)

SCALE : 1:10

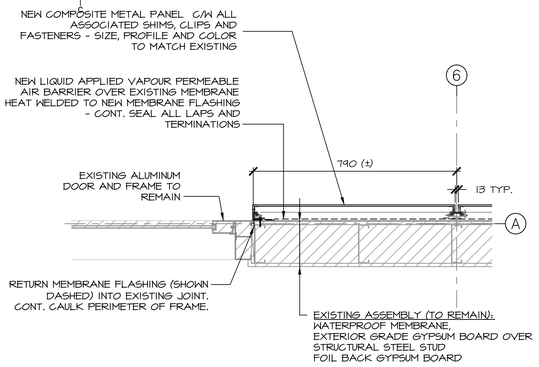

SEE DETAIL 1/A8.4 FOR DEMOLITION WORK

EXIT DOOR AT GRID A/6 - NEW WORK (2 / A8.4)

SCALE : 1:10

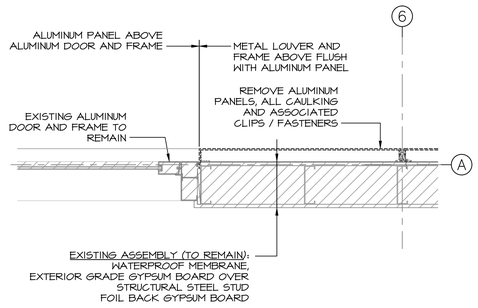

SEE DETAIL 2/A8.4 FOR NEW WORK

EXIT DOOR AT GRID A/6 - DEMOLITION (1 / A8.4)

SCALE : 1:10

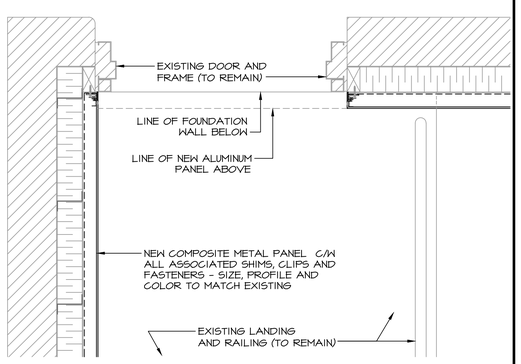

SEE DETAIL 9/A8.4 FOR DEMOLITION WORK

COMPOSITE METAL PANELS AT LOADING DOCK - NEW WORK (10 / A8.4)

SCALE: 1:5

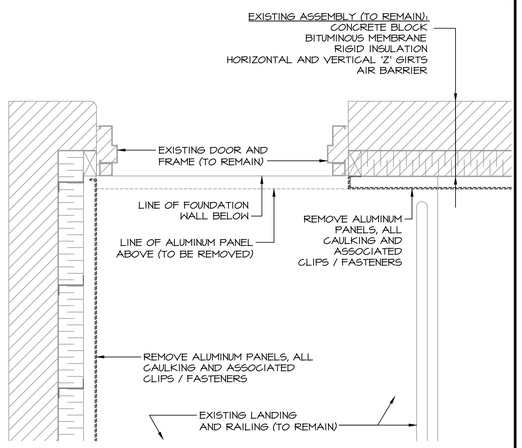

SEE DETAIL 10/A8.4 FOR NEW WORK

COMPOSITE METAL PANELS AT LOADING DOCK - DEMOLITION (9 / A8.4)

SCALE: 1:5

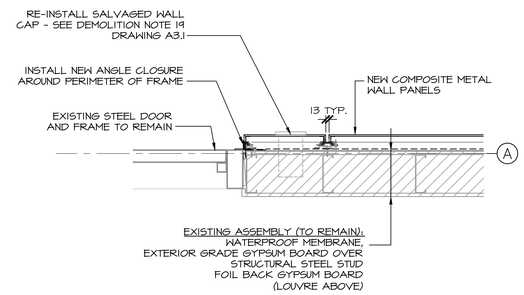

SEE DETAIL 3/A8.4 FOR DEMOLITION WORK

EXIT DOOR NEAR GRID A/9 - NEW WORK (4 / A8.4)

SCALE : 1:10

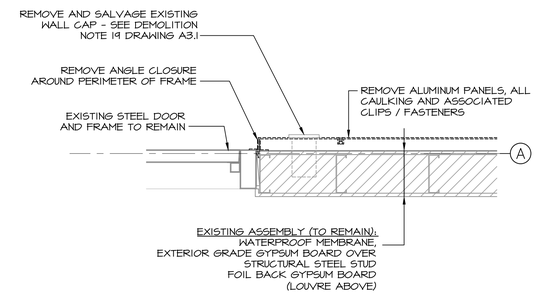

SEE DETAIL 4/A8.4 FOR NEW WORK

EXIT DOOR NEAR GRID A/9 - DEMOLITION (3 / A8.4)

SCALE : 1:10

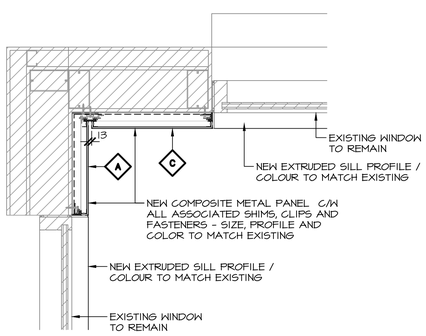

SEE DETAIL 11/A8.4 FOR DEMOLITION WORK

INSIDE CORNER NEAR FRONT ENTRANCE - NEW WORK (12 / A8.4)

SCALE: 1:5

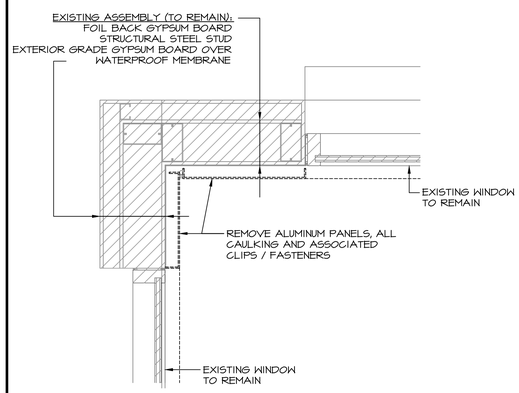

SEE DETAIL 12/A8.4 FOR NEW WORK

INSIDE CORNER NEAR FRONT ENTRANCE - DEMOLITION (11 / A8.4)

SCALE: 1:5

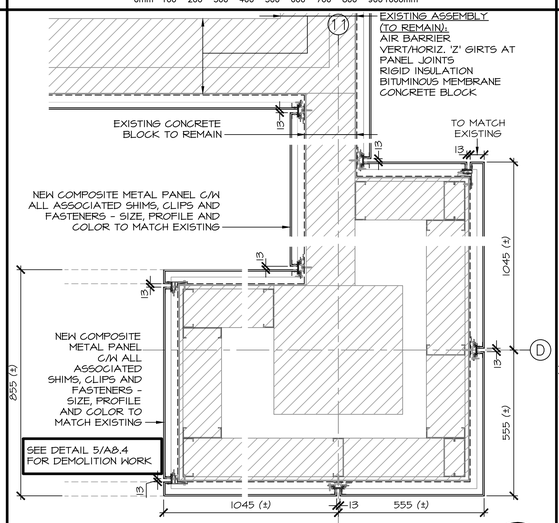

SEE DETAIL 5/A8.4 FOR DEMOLITION WORK

CORNER DETAIL AT LOADING DOCK - NEW WORK (6 / A8.4)

SCALE : 1:10

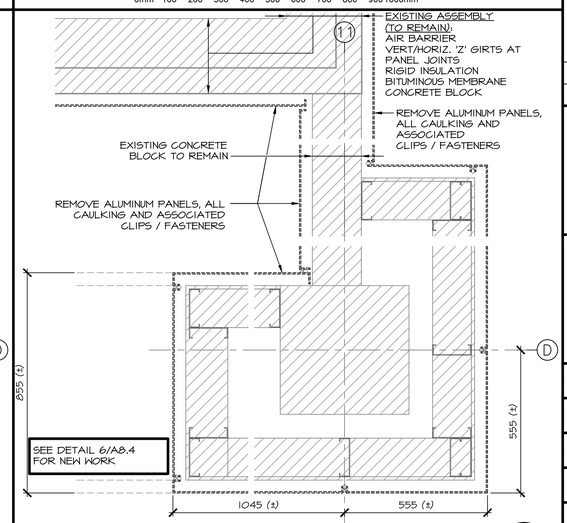

SEE DETAIL 6/A8.4 FOR NEW WORK

CORNER AT LOADING DOCK - DEMOLITION (5 / A8.4)

SCALE : 1:10

PWGSC B1 (2004)

E-DRM/GDD-E: —

Public Works and Government Services Canada / Travaux Publics et Services gouvernementaux Canada
Canadian Food Inspection Agency / Agence canadienne d'inspection des aliments

DFS INC. architecture & design

Saint John, NB / Montréal, QC
75 Prince William Street, Suite 301
Saint John, New Brunswick E2L 2B2
T: (506) 634-8377 F: (506) 632-1741
www.dfsarch.com

LICENSED ARCHITECT — RICHARD R. GRADON — NOVA SCOTIA ASSOCIATION OF ARCHITECTS

revisions		date
0	ISSUED FOR TENDER	04/29/2016

project / projet

CFIA LABORATORY WALL CLADDING, ROOFING AND GENERATOR REPLACEMENT DARTMOUTH, N.S.

drawing / dessin

PLAN DETAILS

designed / conçu: GK — date: Apr. 29, 2016
drawn / dessiné: BC — date: Apr. 29, 2016
approved / approuvé: RG — date: Apr. 29, 2016
Tender / Soumission
PWGSC Project Manager / Administrateur de projets TPSGC
project number / no. du projet: H0013
drawing no. / no. du dessin: A8.4