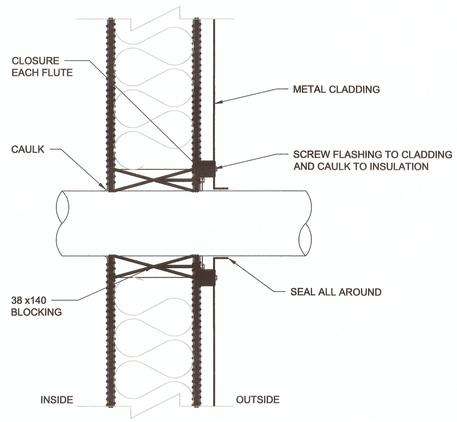

PIPE PENETRATION DETAIL

Scale: NTS

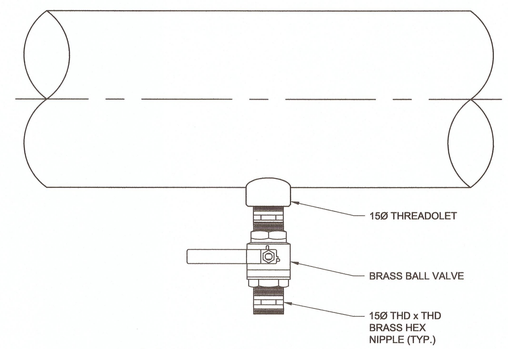

DRAIN LINE/SAMPLE TAP ASSEMBLY DETAIL

Scale: NTS

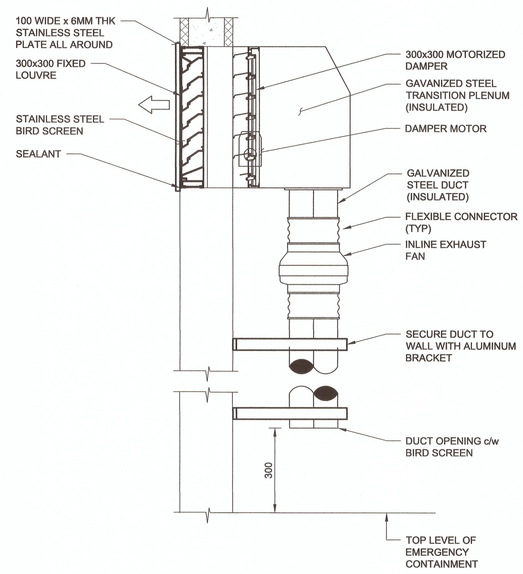

TYPICAL INLINE EXHAUST AND WALL OUTLET DETAIL

Scale: NTS

1:25 @ ANSI D 0 400 800 1200 1600 2000 2400 mm

PWGSC – A1 – 841X594

0 10 20 30 40 50 60 70 80 90 100mm

Public Works and Government Services Canada / Travaux publics et Services gouvernementaux Canada

REAL PROPERTY SERVICES
Pacific Region
SERVICES IMMOBILIERS
Région de Pacifique

WEDLER ENGINEERING

OPUS

PROFESSIONAL ENGINEER PROVINCE OF BRITISH COLUMBIA
M. T. McCARTNEY
36787

20160614

Revision/ Revision	Description/Description	Date/Date
3	ISSUED FOR TENDER	2016/05/20
2	99% COMPLETE - ISSUED FOR REVIEW	2016/05/03
1	66% COMPLETE - ISSUED FOR REVIEW	2016/01/22

Client/client

PUBLIC WORKS AND GOVERNMENT SERVICES CANADA

Project title/Titre du projet

GLACIER NATIONAL PARK WATER SOURCE CONVERSION

Consultant Signature Only
OPUS CONSULTANTS LTD.

Designed by/Concept par

Drawn by/Dessine par

PWGSC Project Manager/Administrateur de Projets TPSGC
TOM DUNPHY

Regional Manager, Architectural and Engineering Services
Gestionnaire régionale, Services d'architectural et de génie, TPSGC
PREETIPAL PAUL

Drawing title/Titre du dessin

NEW WATER TREATMENT SYSTEM MECHANICAL SECTION

Project No./No. du projet	Sheet/Feuille	Revision no./ La Révision no.
R.076550.001	M102	3

G:\Private\D-417707.00 – PWGSC Rogers Pass WTP Upgrade\500 Deliver\540 CAD & Dwgs (pdf only)\Current Working Folder\(W) Mechanical\D-417707.00_M001 R1.dwg 2016/6/13 02:27:00 PM yktn\D
2016 © WEDLER ENGINEERING LLP – ALL RIGHTS RESERVED – THIS DOCUMENT IS PROTECTED BY COPYRIGHT LAW AND MAY NOT BE REPRODUCED IN ANY MANNER, OR FOR ANY PURPOSE, EXCEPT BY WRITTEN PERMISSION OF COPYRIGHT HOLDER.