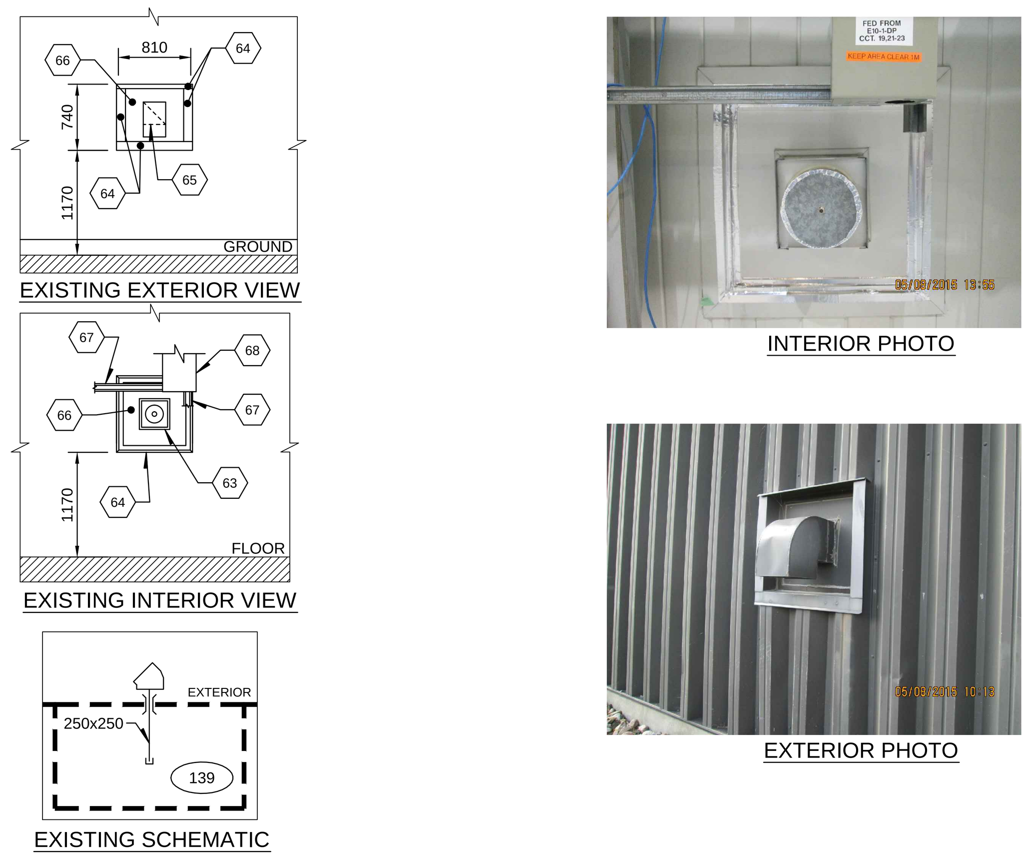

EXISTING EXTERIOR VIEW / EXISTING INTERIOR VIEW / EXISTING SCHEMATIC / INTERIOR PHOTO / EXTERIOR PHOTO

9 — M-204

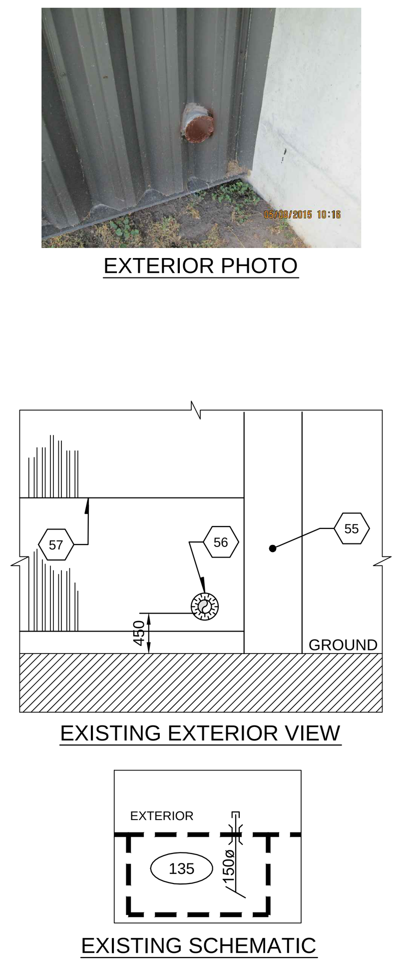

EXTERIOR PHOTO / EXISTING EXTERIOR VIEW / EXISTING SCHEMATIC

6 — M-204

SPECIFIC NOTE(S):

1- COORDINATE WITH ARCHITECTURAL DRAWINGS FOR COMPLETE SHAFT DEMOLITION.

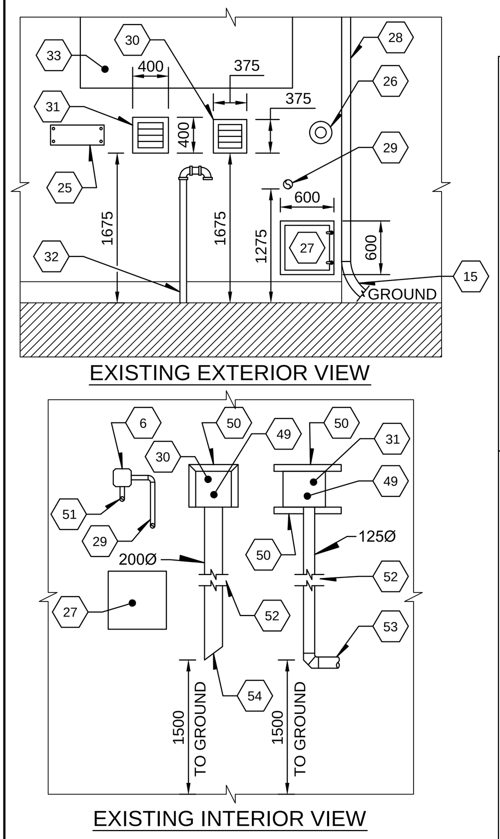

EXISTING EXTERIOR VIEW / EXISTING INTERIOR VIEW

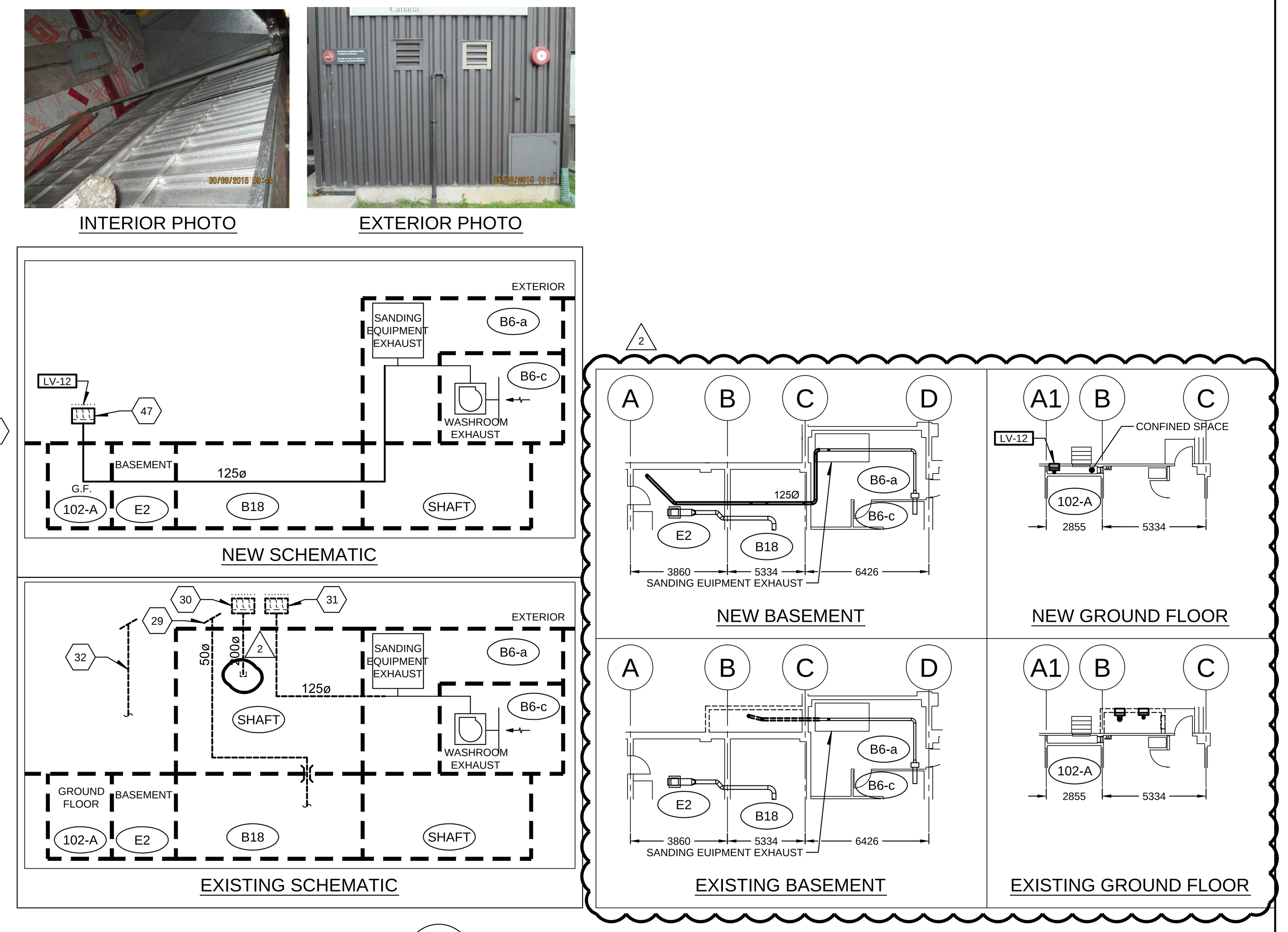

INTERIOR PHOTO / EXTERIOR PHOTO / NEW SCHEMATIC / EXISTING SCHEMATIC / NEW BASEMENT / NEW GROUND FLOOR / EXISTING BASEMENT / EXISTING GROUND FLOOR

3 — M-204

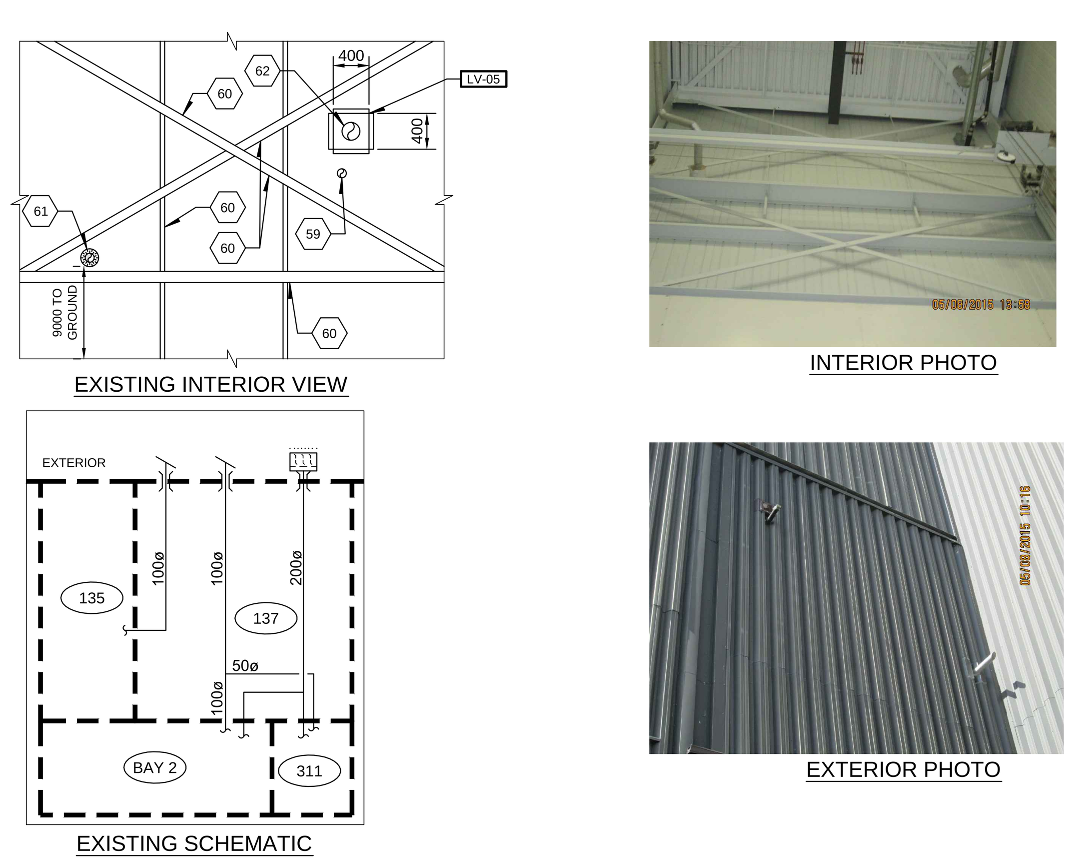

EXISTING INTERIOR VIEW / EXISTING SCHEMATIC / INTERIOR PHOTO / EXTERIOR PHOTO

8 — M-204

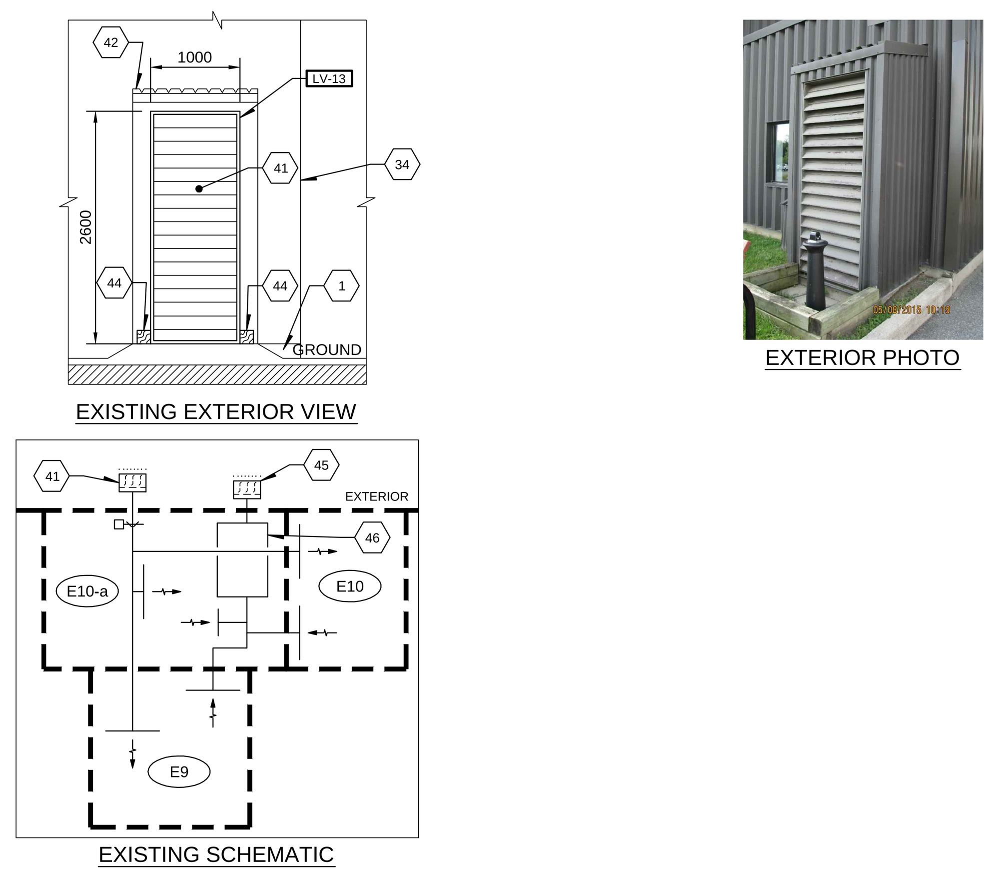

EXISTING EXTERIOR VIEW / EXISTING SCHEMATIC / EXTERIOR PHOTO

5 — M-204

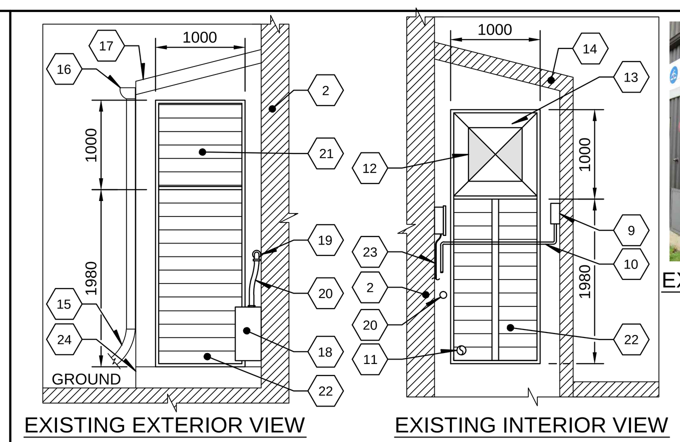

EXISTING EXTERIOR VIEW / EXISTING INTERIOR VIEW

EXTERIOR PHOTO / INTERIOR PHOTO 1 / INTERIOR PHOTO 2

SPECIFIC NOTE(S):

1- COORDINATE WITH ARCHITECTURAL DRAWINGS FOR COMPLETE SHAFT DEMOLITION.

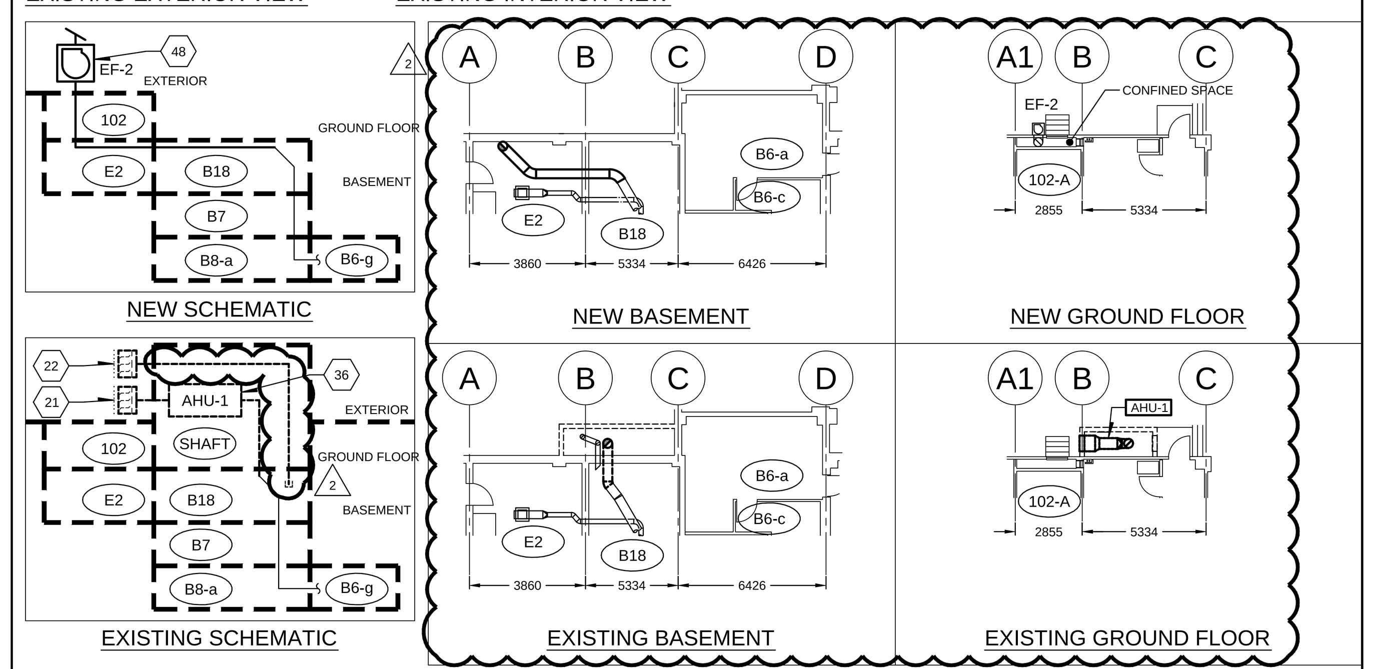

NEW SCHEMATIC / EXISTING SCHEMATIC / NEW BASEMENT / NEW GROUND FLOOR / EXISTING BASEMENT / EXISTING GROUND FLOOR

2 — M-204

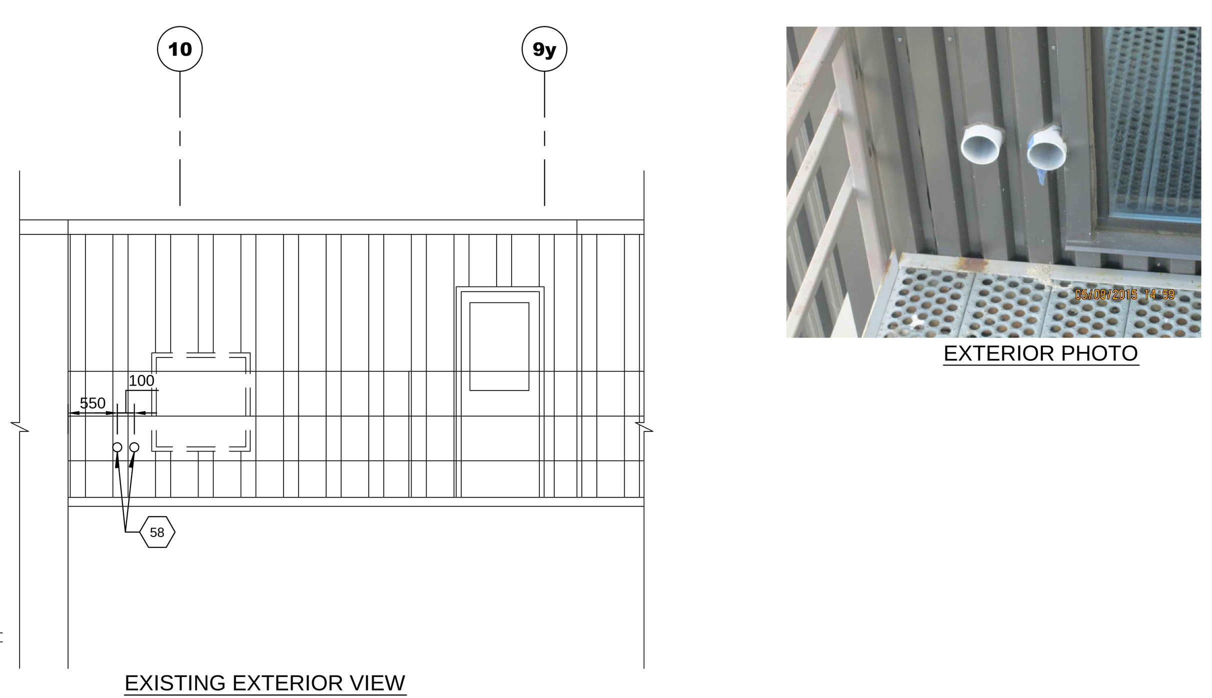

EXISTING EXTERIOR VIEW / EXTERIOR PHOTO

7 — M-204

INTERIOR PHOTO / EXTERIOR PHOTO

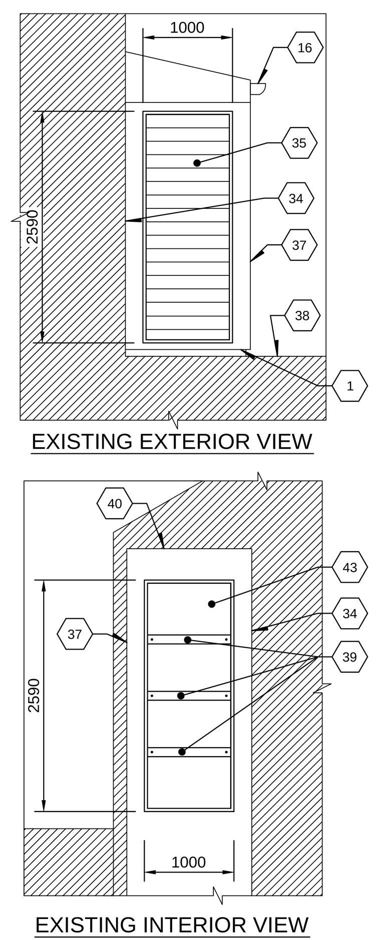

EXISTING EXTERIOR VIEW / EXISTING INTERIOR VIEW

SPECIFIC NOTE(S):

1- COORDINATE WITH ARCHITECTURAL DRAWINGS FOR COMPLETE SHAFT DEMOLITION.

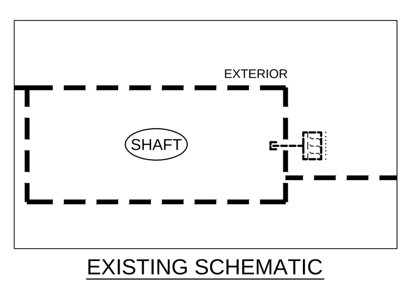

EXISTING SCHEMATIC

4 — M-204

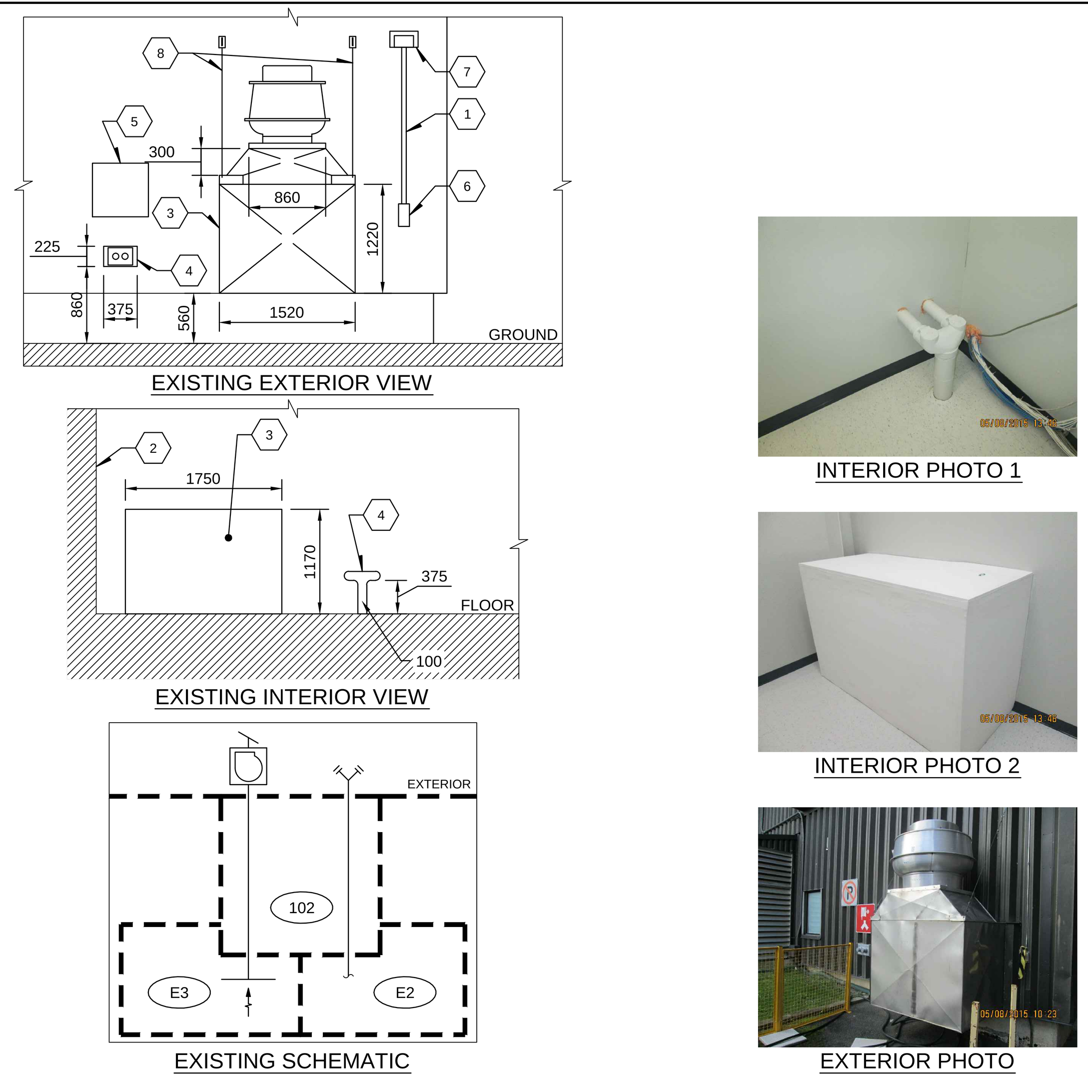

EXISTING EXTERIOR VIEW / EXISTING INTERIOR VIEW / EXISTING SCHEMATIC / INTERIOR PHOTO 1 / INTERIOR PHOTO 2 / EXTERIOR PHOTO

1 — M-204

IDENTIFICATION(S):

1. ELECTRICAL CONDUIT.
2. WALL.
3. 1220x1520 DUCTWORK CONNECTED TO FAN AND ROUTED THROUGH EXTERIOR WALL. TEMPORARILY REMOVE FAN AND ASSOCIATED DUCT UP TO INTERIOR OF BUILDING. REINSTALL FAN AND DUCT ONCE ENVELOPE WORK IS COMPLETED.
4. 65Ø FIRE DEPARTEMENT SIAMESE CONNECTION. TEMPORARILY REMOVE UP TO 1000mm PIPING CONNECTION. REINSTALL ONCE ENVELOPE WORK IS COMPLETED.
5. WALL-MOUNTED SIGN INDICATING FIRE DEPARTEMENT CONNECTION. REMOVE AND REINSTALL.
6. JUNCTION BOX.
7. LIGHT.
8. HANGER CABLES CONNECTED TO FAN DUCTWORK AND EXTERIOR WALL TO BE TEMPORARILY REMOVED AND REINSTALLED.
9. JUNCTION BOX AND CONDUIT TO EXTERIOR OF BUILDING ENVELOPE.
10. CONDUIT ROUTED IN FRONT OF LOWER LOUVER.
11. 50Ø ELECTRICAL CONDUIT ROUTED FROM EXTERIOR ELECTRICAL BOX THROUGH EXTERIOR WALL LOUVER INTO MECHANICAL SHAFT.
12. 750x750 DUCTWORK TO AIR HANDLER.
13. REMOVE DUCTWORK CONNECTED TO 1000x1000 EXTERIOR LOUVER UP TO AIR HANDLER WITHIN MECHANICAL SHAFT.
14. MECHANICAL SHAFT CEILING.
15. FLEXIBLE DRAIN PIPING CONNECTED TO DRAINSPOUT.
16. WALL-MOUNTED EAVE.
17. ROOF OF MECHANICAL SHAFT, INCLUDING METAL FLASHING.
18. WALL-MOUNTED ELECTRICAL BOX 300mm OUT FROM LOUVERS.
19. WALL-MOUNTED CONDUIT UP MAIN BUILDING WALL.
20. 25Ø CONDUIT THROUGH WALL INTO MECHANICAL SHAFT.
21. 1000x1000 EXTERIOR WALL LOUVER TO BE REMOVED AND DISCARDED ALONG WITH ASSOCIATED DUCTWORK, SUPPORTS & ACCESSORIES.
22. 1980X1000 EXTERIOR WALL LOUVER TO BE REMOVED AND DISCARDED ALONG WITH ASSOCIATED DUCTWORK, SUPPORTS & ACCESSORIES.
23. WALL-MOUNTED DISCONNECT FOR AIR HANDLER COORDINATE WITH ELECTRICAL FOR DEMOLITION.
24. DRAINSPOUT ON BUILDING WALL.
25. WALL-MOUNTED NO-SMOKING SIGN.
26. FIRE ALARM WATER GONG TO BE REMOVED ALONG WITH ASSOCIATED PIPING, CONTROLS AND ACCESSORIES. REINSTALL AFTER ENVELOPPE WORK IS COMPLETE ON NEW WALL. EXACT LOCATION TO BE DETERMINED BY DEPARTMENTAL REPRESENTATIVE.
27. 600x600 ACCESS DOOR TO MECHANICAL SHAFT TO BE DEMOLISHED.
28. EDGE OF MECHANICAL SHAFT EXTERIOR WALL.
29. 50Ø ABANDONED CONDUIT OUTLET THROUGH WALL TO BE DEMOLISHED WITH ALL ASSOCIATED SUPPORTS & OTHER ACCESSORIES BACK TO ROOM B-18 LOCATED IN THE BASEMENT. INFILL REMAINING WALL PENETRATION. COORDINATE WITH ARCHITECTURAL DRAWINGS. CAP REMAINING PIPING.
30. 375x375 EXTERIOR WALL LOUVER TO BE REMOVED COMPLETE WITH ALL ASSOCIATED DUCTWORK SUPPORTS & OTHER ACCESSORIES BACK TO ROOM B6-A. INFILL REMAINING WALL PENETRATION. COORDINATE WITH ARCHITECTURAL DRAWINGS.
31. 400x400 EXTERIOR WALL LOUVER TO BE REMOVED COMPLETE WITH ALL ASSOCIATED DUCTWORK, SUPPORTS & OTHER ACCESSORIES.
32. PVC PIPING, 75mm DIAMETER, 150mm OUT FROM EXISTING BUILDING ENVELOPE. DEMOLISH PIPE BACK BELOW GRADE AND ROUTE PIPING TO NEW EXTERIOR WALL. ROUTE PIPING UP THROUGH GRADE ALONG NEW EXTERIOR WALL AND REINSTATE TO MATCH EXISTING.
33. WALL-MOUNTED FACILITY SIGN.
34. EDGE OF MAIN BUILDING WALL.
35. 2590x1000 EXTERIOR WALL LOUVER. LOUVER IS BLANKED WITH SHEET METAL ON INTERIOR OF MECHANICAL SHAFT. TO BE DEMOLISHED ALONG WITH ISOLATED DUCTWORK, SUPPORT & ACCESSORIES.
36. DEMOLISH AHU-1 ALONG WITH ASSOCIATED DUCTWORK, SUPPORTS & ACCESSORIES BACK TO ROOM B18. INFILL REMAINING WALL PENETRATION, COORDINATE WITH ARCHITECTURAL DRAWINGS.
37. EDGE OF ACCESS SHAFT PROTRUSION FROM MAIN BUILDING.
38. PATIO STONE ACCESS PATCH TO REAR ENTRANCE DOOR.
39. METAL BRACING SUPPORTING SHEET METAL BLANKING EXTERIOR WALL LOUVER.
40. CEILING OF MECHANICAL SHAFT.
41. 2600x1000 EXTERIOR WALL LOUVER. CONNECTS TO DUCTWORK IN THE BASEMENT, PROVIDING FRESH AIR TO ROOMS E10-A, E9, E10. REMOVE LOUVER ALONG WITH ALL ASSOCIATED SUPPORTS AND ACCESSORIES AND REPLACE WITH NEW LOUVER 2600x1000. COLOR TO BE SELECTED FROM MANUFACTURER'S STANDARD RANGE BY DEPARTMENTAL REPRESENTATIVE. COORDINATE WITH ARCHITECTURAL DRAWINGS.
42. ROOF OF PROTRUDING AIR INTAKE SHAFT ASSEMBLY FOR EXTERIOR WALL LOUVER.
43. SHEET METAL BLANKING EXTERIOR WALL LOUVER FROM INSIDE MECHANICAL SHAFT.
44. WOODEN 100x100 SLEEPER IN FRONT OF EXTERIOR WALL LOUVER.
45. EXISTING EXHAUST LOUVER INSTALLED HORIZONTALLY GROUND LEVEL. SURFACE BELOW GRILLE. CONNECTS TO DUCTWORK, EXHAUSTING AIR FROM ROOMS E10-A, E10, E9 TO REMAIN.
46. EXISTING FAN COIL UNIT INSTALLED IN ROOM E10-A. SUPPLY DUCTWORK CONNECTS TO EXHAUST LOUVER (ITEM 45).
47. NEW EXTERIOR WALL LOUVER 400x400. COLOR TO BE SELECTED FROM MANUFACTURER'S STANDARD RANGE BY DEPARTMENTAL REPRESENTATIVE. INSTALL 1200mm ABOVE GRADE.
48. INSTALL NEW WALL MOUNTED EXHAUST FAN 1200mm ABOVE GRADE. INSTALL NEW DUCTWORK 400Ø FROM ROOM B18 & E2 IN THE BASEMENT AND UP TO CONFINED SPACE THROUGH SLAB INTO ROOM RFQF STORAGE 102-A. CONNECT CONTROLS WIRING BACK TO WELDER HOOD FAN CONTROLS BOX IN ROOM B18.
49. EXTERIOR LOUVER CONNECTED DUCTWORK.
50. METAL FRAMING SUPPORTING EXTERIOR LOUVER CONNECTED DUCTWORK.
51. 50Ø CONDUIT THROUGH MECHANICAL SHAFT AND OUT THROUGH INTERIOR WALL.
52. REMOVE VERTICAL DUCTWORK IN MECHANICAL SHAFT THAT TRAVELS APPROXIMATELY 3000mm FROM EXTERIOR LOUVERS TO NON-VERTICAL FEATURES INDICATED BY NOTES 53 AND 54.
53. 125Ø ROUND DUCT ROUTED THROUGH MECHANICAL SHAFT INTERIOR WALL AND INTO SANDING ROOM TO BE REMOVED.
54. 200Ø ROUND DUCT OPEN TO MECHANICAL SHAFT TO BE REMOVED.
55. CONCRETE COLUMN PROTRUDING OUT FROM BUILDING ENVELOPE.
56. BLANKED PIPE, 100, THROUGH WALL TO BE REMOVED. REFILL WALL OPENING ONCE ENVELOPE WORK IS COMPLETED.
57. BOTTOM OF ACCESS DOORS INTO ANECHOIC CHAMBER.
58. PVC SLEEVE, 100, THROUGH WALL TO BE REMOVED. INSTALL NEW ONCE ENVELOPE WORK DONE.
59. PIPE, 100, THROUGH WALL TO REMAIN DURING ENVELOPE WORK. PROVIDE NEW SLEEVE ONCE WORK IS COMPLETED.
60. METAL FRAMING WITHIN BUILDING.
61. 100Ø PIPE THROUGH WALL, TO REMAIN DURING ENVELOPE WORK. PROVIDE NEW SLEEVE ONCE WORK IS COMPLETED.
62. 200Ø DUCT CONNECTED TO 400x400 DUCT AND EXTERIOR LOUVER. DISCONNECT 200Ø DUCT FROM 400x400 DUCT. REMOVE 400x400 DUCT AND LOUVER TO ALLOW ENVELOPE WORK. INSTALL NEW DUCT AND LOUVER AND REINSTATE 200Ø DUCT ONCE WORK IS COMPLETED.
63. 250X250 DUCT THROUGH WALL, WITH 200Ø ROUND DUCT BLANKED WITH SHEET METAL. TO BE REMOVED. OPENINGS TO BE CLOSED COORDINATE WITH ARCHITECTURAL DRAWINGS.
64. METAL FLASHING FOR DUCT PENETRATION THROUGH WALL. TO BE REMOVED. OPENINGS TO BE CLOSED COORDINATE WITH ARCHITECTURAL DRAWINGS.
65. 250x250 DOWNTURNED DUCT THROUGH WALL. TO BE REMOVED. OPENINGS TO BE CLOSED COORDINATE WITH ARCHITECTURAL DRAWINGS.
66. PANELLING FILLING 810x740 WALL OPENING FOR DUCTWORK. TO BE REMOVED. OPENINGS TO BE CLOSED COORDINATE WITH ARCHITECTURAL DRAWINGS.
67. SUPPORT STRUT FOR ELECTRICAL PANEL. TO BE REMOVED. OPENINGS TO BE CLOSED COORDINATE WITH ARCHITECTURAL DRAWINGS.
68. ELECTRICAL PANEL INSTALLED PARTIALLY OBSTRUCTING PANEL-FILLED 810x740 OPENING FOR DUCTWORK. TO BE REMOVED. OPENINGS TO BE CLOSED COORDINATE WITH ARCHITECTURAL DRAWINGS.

Public Works and Government Services Canada / Travaux publics et services gouvernementaux Canada

Canadian Space Agency / Agence spatiale canadienne

Pageau Morel et associés inc.
365, boul. Gréber, bur. 302
Gatineau (Québec) J8T 5R3
T 819.776.4665
F 819.776.4775
www.pageaumorel.com
PAGEAUMOREL
7405-000-00

Cleland Jardine Engineering Limited
580 TERRY FOX DRIVE, SUITE 200
KANATA, ONTARIO, K2L 4B9
TEL. (613)591-1533 FAX (613)591-1703
EMAIL: mail@clelandjardine.com

COLE+Associates ARCHITECTS INC

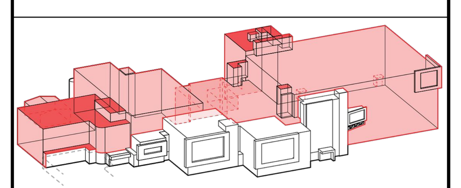

LICENSED PROFESSIONAL ENGINEER — F. DIONNE 100133615 — PROVINCE OF ONTARIO

2016-07-27

No.	Revision	Date
2.	ADDENDUM No 1	2016.07.26
1.	ISSUED FOR TENDER	2016.05.01

PROFESSIONAL STAMP

A detail no. / no. du detail
B location drawing no. / sur dessin no.
C drawing no. / dessin no.

project / projet
DAVID FLORIDA LABORATORY
BUILDING No. 65, SHIRLEY'S BAY, ONTARIO

BUILDING ENVELOPE REFIT PROJECT- CSA15-G1

drawing / dessin
MECHANICAL DETAILS

designed / date	S. JOANISSE / Z. FETTAKA	2016.04.07	concu
drawn / date	D. VÉZINA	2016.04.07	dessine
reviewed / date	F. DIONNE	2016.04.07	examine
approved / date	F. DIONNE	2016.04.07	approuve
scale			

project no. / no. du projet: CSA15-G1

drawing no. / no. du desin: M-204