END OF SECTION

Part 1 General

1.1 PRECEDENCE

.1 For Federal Government projects, Division 1 Sections take precedence over technical specification sections in other divisions of this specification

1.2 WORK COVERED BY CONTRACT DOCUMENTS

.1 Work of this Contract comprises includes: removal and replacement of asphalt roadway, removal and replacement of concrete sidewalks including curb and gutter and wheelchair ramps, water line demolition and replacement, sanitary sewer line demolition and replacement, water line and sanitary service connections to homes and other park facilities, storm sewer and catch basin installation, tree planting, topsoil and seeding, pavement markings, and other work.

1.3 WORK SCHEDULE

.1 This project must be undertaken in the following phases:

- .1 Phase C – Clematis Avenue, Harebell Road, Vimy Avenue, Cameron Falls Drive, and Alley 6
  - .1 Commence – September, 2016
  - .2 Completion – August 30th, 2017
- .2 Bertha Lane
  - .1 Completion by May 15th, 2017
- .3 Alley 2
  - .1 Completion by Dec. 15th, 2016

.2 No construction will be allowed during the long weekends; “no work” periods as follows:

- .1 Thanksgiving Day 2016
  - .1 Friday, October 7h to Monday, October 10th
- .2 Victoria Day 2017
  - .1 Friday, May 19th to Monday May 22nd
- .3 Canada Day 2017
  - .1 Thursday, June 29th to Sunday, July 2nd
- .4 Civic Holiday 2017
  - .1 Friday August 4th to Monday, August 7th
- .5 Labour Day 2017
  - .1 Friday, September 1st to Monday, September 4th
- .6 Thanksgiving Day 2017
  - .1 Friday, October 6th to Monday, October 9th
- .7 Victoria Day 2018
  - .1 Friday, May 18th to Monday May 21st

.3 Construction equipment will operate only between 08:00 and 18:00 on weekends and between 08:00 and 19:00 on weekdays to minimize disturbance to residents and businesses.

.4 No additional compensation will be provided to the Contractor for cold weather work or other weather-related delays or costs.

1.4 WORK SEQUENCE

.1 Contractor shall proceed with Phase C utility/underground work immediately upon contract award and work must be completed by June 20th, 2017. All surface works must be completed by August 30th, 2017. Contractor is made aware there is a possibility of encountering ground frost during April in Waterton.

.2 No utility/underground construction activities shall occur between June 21st and August 30th,, 2017 for all Phase C work. Contractor shall not begin any new or additional construction activities that cannot be completed prior to June 20th, 2017.

.3 Construct Work in stages to provide for continuous public usage. Do not close off public usage of facilities until use of one stage of Work will provide alternate usage. All Phase C surfaces disrupted during the spring phase of construction shall be returned to a finished, safe and useable condition, approved by Departmental Representative, prior to June 20th, 2017.

.4 Contractor shall prepare a meaningful bar chart or network diagram showing proposed schedule of major works which shall be provided to Departmental Representative within one week of Contract award and prior to commencement of any work.

.5 When schedule has been approved by Departmental Representative, take necessary measures to complete work within scheduled time. Do not change schedule without Departmental Representative's approval.

1.5 CONTRACTOR USE OF PREMISES

.1 For the purpose of this contract, Contractor will not be permitted to set up camp in Waterton Lakes National Park

.2 Parks Canada regulations prohibit anyone working with the Park from using campground facilities.

1.6 NATIONAL PARK REGULATIONS

.1 Contractor and all sub-contractors shall ensure that all work is performed in accordance with ordinances, laws, rules and regulations set out in the National Park Act.

.2 Contractor and all sub-contractors shall obtain business licenses from Parks Canada Administration Office prior to commencement of work.

.3 Contractor and all sub-contractors shall comply with all laws and government regulations applicable to work under this contract.

.4 All Contractor's and all sub-contractor's business and private vehicles are required to obtain vehicle passes from Parks Canada Administration Office.

.5 Contractor to equip all service vehicles and supervisory vehicles with Emergency Spill Kit DOT-E-10102 or equivalent.

.6 Contractor is responsible to ensure all sub-contractors comply with the National Park Regulations

1.7 EXISTING SERVICES

.1 Notify Departmental Representative and utility companies of intended interruption of services and obtain required permission.

.2 Where Work involves breaking into or connecting to existing services, give Departmental Representative 72 hours notice for necessary interruption of residential services throughout course of work. Minimize duration of interruptions. Carry out work at times as directed by governing authorities with minimum disturbance to residents

.3 Provide alternative routes for pedestrian and vehicular traffic.

.4 Establish location and extent of residential service lines in area of work before starting Work. Notify Departmental Representative of findings.

.5 Submit schedule to and obtain approval from Departmental Representative for any shut-down or closure of active service or facility including water, sewer, power and communications services. Adhere to approved schedule and provide notice to affected parties.

.6 Provide temporary services when directed by Departmental Representative to maintain critical building and tenant systems for any shutdown over two (2) hours.

.7 Provide adequate bridging over trenches which cross sidewalks or roads to permit normal traffic.

.8 Where unknown services are encountered, immediately advise Departmental Representative and confirm findings in writing.

.9 Protect, relocate or maintain existing active services. When inactive services are encountered, cap off in manner approved by authorities having jurisdiction.

.10 Record locations of maintained, re-routed and abandoned service lines.

.11 Construct barriers in accordance with Section 01 56 00 - Temporary Barriers and Enclosures.

1.8 DOCUMENTS REQUIRED

.1 Maintain at job site, one copy each document as follows:

- .1 Contract Drawings.
- .2 Specifications.
- .3 Addenda.
- .4 Reviewed Shop Drawings.
- .5 List of Outstanding Shop Drawings.
- .6 Change Orders.
- .7 Other Modifications to Contract.
- .8 Field Test Reports.
- .9 Copy of Approved Work Schedule.
- .10 Health and Safety Plan and Other Safety Related Documents.

.11 Other documents as specified.

Part 2 Products

2.1 NOT USED

.1 Not used.

Part 3 Execution

3.1 NOT USED

.1 Not used.

END OF SECTION

Part 1 Method of Measurement and payment

1.1 WATER

.1 The unit price bid for "100 mm dia. SDR 18 PVC" shall be considered full compensation for all materials, labour and equipment required for the installation of water line including: temporary water services, supply and delivery of pipe, excavation and trenching to the required depth, supply and placement of granular bedding material, pipe installation to the specified line and grade, fittings, connections, tracer wire, thrust blocks, mechanical thrust protection, bends, reducers, tees, couplings, plugs, backfilling to roadway subgrade elevation, compaction, soil conditioning, dewatering, care of water, disposal of excess material off site, pressure testing, flushing, chlorinating and all other work necessary to complete the Work to the satisfaction of the Departmental Representative.

.1 Pipe will be measured horizontally, along the top of the pipe, from centreline of connection to centreline of connection.

.2 Payment will be made for each field measured lineal metre of pipe installed, pending approval of pressure, chlorination and bacterial testing results

.2 The unit price bid for "150 mm dia. SDR 18 PVC" shall be considered full compensation for all materials, labour and equipment required for the installation of water line including: temporary water services, supply and delivery of pipe, excavation and trenching to the required depth, supply and placement of granular bedding material, pipe installation to the specified line and grade, fittings, connections, tracer wire, thrust blocks, mechanical thrust protection, bends, reducers, tees, couplings, plugs, backfilling to roadway subgrade elevation, compaction, soil conditioning, dewatering, care of water, disposal of excess material off site, pressure testing, flushing, chlorinating and all other work necessary to complete the Work to the satisfaction of the Departmental Representative.

.1 Pipe will be measured horizontally, along the top of the pipe, from centreline of connection to centreline of connection.

.2 Payment will be made for each field measured lineal metre of pipe installed, pending approval of pressure, chlorination and bacterial testing results.

.3 The unit price bid for "200 mm dia. SDR 18 PVC" shall be considered full compensation for all materials, labour and equipment required for the installation of water line including: temporary water services, supply and delivery of pipe, excavation and trenching to the required depth, supply and placement of granular bedding material, pipe installation to the specified line and grade, connections, tracer wire, thrust blocks, mechanical thrust protection, beds, tees, couplings, plugs, backfilling to roadway subgrade elevation, compaction, soil conditioning, dewatering, care of water, disposal of excess material off site, pressure testing, flushing, chlorinating and all other work necessary to complete the Work to the satisfaction of the Departmental Representative.

.1 Pipe will be measured horizontally, along the top of the pipe, from centreline of connection to centreline of connection.

.2 Payment will be made for each field measured lineal metre of pipe installed, pending approval of pressure, chlorination and bacterial testing results.

.4 The unit price bid for "250 mm dia. SDR 18 PVC" shall be considered full compensation for all materials, labour and equipment required for the installation of water line including: temporary water services, supply and delivery of pipe, excavation and trenching to the required depth, supply and placement of granular bedding material, pipe installation to the specified line and grade, connections, tracer wire, thrust blocks, mechanical thrust protection, beds, tees, couplings, plugs, backfilling to roadway subgrade elevation, compaction, soil conditioning, dewatering, care of water, disposal of excess material off site, pressure testing, flushing, chlorinating and all other work necessary to complete the Work to the satisfaction of the Departmental Representative.

.1 Pipe will be measured horizontally, along the top of the pipe, from centreline of connection to centreline of connection.

.2 Payment will be made for each field measured lineal metre of pipe installed, pending approval of pressure, chlorination and bacterial testing results.

.5 The unit price bid for "Water Line Tie-In – Mains" shall be considered full compensation for all materials, labour and equipment required for tie-ins of new water lines to existing water lines including: digging, trenching, placing, backfilling to roadway subgrade elevation, compacting, disposal of excess material off site, coordination and notification required for water service interruption, flushing, testing, chlorination and all work incidental to the completed tie-in. Supply and install bedding, provide mechanical thrust protection where required. There could be up to a 1.5 m elevation difference at tie in locations where additional bedding and mechanical thrust protection will be required which will be included in the unit rate.

.1 Each tie-in will be counted.

.2 Payment will be made for each completed connection to an existing water line.

.6 The unit price bid for "Water Line Service – 25 mm to Curb Stop (up to 15m)" shall be considered full compensation for all materials, labour and equipment required for tie-ins of new water lines to existing services including: digging, trenching, placing, backfilling to subgrade elevation, compacting, disposal of excess material off site, coordination and notification required for water service interruption, supply and installation of new curb stop, supply and install pipe, supply and install union and connect to existing, supply and install of saddle and connection to the watermain, flushing, testing, chlorination and all work incidental to the completed tie-in. Unit rate includes supply and install of bedding a minimum of 300 mm above the top of pipe and 100 mm below invert of pipe.

.1 Each service tie-in will be counted.

.2 Payment will be made for each completed connection to an existing service.

.7 The unit price bid for "Water Line Service – 25 mm Parks House" shall be considered full compensation for all materials, labour and equipment required for tie-ins of new water lines to existing Parks Houses including: digging, trenching, placing, backfilling to subgrade elevation, compacting, disposal of excess material off site, coordination and notification required for water service interruption, new connection directly to Parks House, supply and installation of new curb stop, supply and install pipe, supply and install union and connect to existing, supply and install of saddle and connection to the

watermain, flushing, testing, chlorination and all work incidental to the completed tie-in. Unit rate includes supply and install of bedding a minimum of 300 mm above the top of pipe and 100 mm below invert of pipe.

.1 Each Parks House tie-in will be counted.

.2 Payment will be made for each completed connection to an existing Parks House.

.8 The unit price bid for "Water Line Service – 50 mm to Curb Stop (up to 15m)" shall be considered full compensation for all materials, labour and equipment required for tie-ins of new water lines to existing services including: digging, trenching, placing, backfilling to subgrade elevation, compacting, disposal of excess material off site, coordination and notification required for water service interruption, supply and installation of new curb stop, supply and install pipe, supply and install union and connect to existing, supply and install of saddle and connection to the watermain, flushing, testing, chlorination and all work incidental to the completed tie-in. Unit rate includes supply and install of bedding a minimum of 300 mm above the top of pipe and 100 mm below invert of pipe.

.1 Each service tie-in will be counted.

.2 Payment will be made for each completed connection to an existing service.

.9 The unit price bid for "Water Line Service – 50 mm to Parks Infrastructure" shall be considered full compensation for all materials, labour and equipment required for tie-ins of new water lines to existing Parks Infrastructure including: digging, trenching, placing, backfilling to subgrade elevation, compacting, disposal of excess material off site, coordination and notification required for water service interruption, new connection directly to subject Infrastructure, supply and installation of new curb stop, supply and install pipe, supply and install union and connect to existing, supply and install of saddle and connection to the watermain, flushing, testing, chlorination and all work incidental to the completed tie-in. Unit rate includes supply and install of bedding a minimum of 300 mm above the top of pipe and 100 mm below invert of pipe.

.1 Each Parks Infrastructure tie-in will be counted.

.2 Payment will be made for each completed connection to existing Parks Infrastructure.

.10 The unit price bid for "150 mm dia. Gate Valve" shall be considered full compensation for the supply off all materials, labour and equipment required for the installation of gate valves including: supply of valves, supports, operating rods, valve boxes and cathodic protection, excavation and trenching to the required depth, supply and placement of granular bedding material, valve insertion to the specified line and grade, connections, thrust blocking, mechanical thrust protection, backfilling to plan subgrade, compactions, soil conditioning, dewatering, care of water, testing, flushing, chlorination, and all work incidental to the completed valve installation.

.1 Each valve will be counted.

.2 Payment will be made for each valve supplied and installed.

.11 The unit price bid for "200 mm dia. Gate Valve" shall be considered full compensation for the supply off all materials, labour and equipment required for the installation of gate valves including: supply of valves, supports, operating rods, valve boxes and cathodic protection, excavation and trenching to the required depth, supply and placement of granular bedding material, valve insertion to the specified line and grade, connections, thrust blocking, mechanical thrust protection, backfilling, compactions, soil conditioning,

dewatering, care of water, testing, flushing, chlorination, and all work incidental to the completed valve installation.

.1 Each valve will be counted.

.2 Payment will be made for each valve supplied and installed.

.12 The unit price bid for "250 mm dia. Gate Valve" shall be considered full compensation for the supply off all materials, labour and equipment required for the installation of gate valves including: supply of valves, supports, operating rods, valve boxes and cathodic protection, excavation and trenching to the required depth, supply and placement of granular bedding material, valve insertion to the specified line and grade, connections, thrust blocking, mechanical thrust protection, backfilling, compactions, soil conditioning, dewatering, care of water, testing, flushing, chlorination, and all work incidental to the completed valve installation.

.1 Each valve will be counted.

.2 Payment will be made for each valve supplied and installed.

.13 The unit price bid for "Fire Hydrant (c/w Valve and Lead)" shall be considered full compensation for the supply of all materials, labour and equipment required for the installation of fire hydrants including: supply and delivery of hydrants, excavating and trenching to the required depth, supply and placement of granular bedding material, hydrant installation to the specified line and grade, connections, thrust blocking, mechanical thrust protections, cathodic protection, supply and install of mainline tee, PVC lead and hydrant isolation valve, backfilling to subgrade elevation, compaction, soil conditioning, dewatering, care of water, testing, flushing, disposal of excess material off site, and all work incidental to the completed hydrant installation.

.1 Each hydrant will be counted.

.2 Payment will be made for each hydrant installed.

.14 The unit price bid for "Pipe Bursting" shall be considered full compensation for all materials, labour and equipment required to replace mains by pipe bursting, including: supply and placement of pipe, insertions and retrieval pits, machine pits, pavement removal and replacement, testing and all work incidental to the completed pipe replacing.

.1 Pipe bursting will be measured horizontally, by GPS survey, from centreline of connection to centreline of connection.

.2 Payment will be made for each field measured lineal metre of pipe replaced by pipe bursting.

.15 The unit price bid for "Decommissioning of Hydrant" shall be considered full compensation for all materials, labour and equipment required for the decommissioning of a hydrant, including: removal to 1 metre below finish grade, removal of stems, filling remaining structure with pipe bedding material, backfilling with compacted free draining native material, rehabilitation of disturbed area to match immediate surrounding terrain, cleaning and all work incidental to the decommissioning of an existing valve or hydrant. Decommissioning of all valves is considered to be incidental to the contract.

.1 Each decommissioned hydrant will be counted.

.2 Payment will be made for each hydrant successfully decommissioned.

.16 The unit price bid for "200 mm dia. DR 11 HDPE" shall be considered full compensation for all materials, labour and equipment required for the supply of 200 mm DR 11 HDPE

including: procuring, loading, hauling, handling, and all work incidental to the installation of 200 mm DR 11 HDPE Pipe.

.1 Pipe will be measured horizontally, along the top of the pipe, from end to end.

.2 Payment will be made for each field measured lineal metre of pipe supplied.

.17 The unit price bid for "Insulation for Waterline" shall be considered full compensation for all materials, labour and equipment required to supply and install waterline insulation according to the specifications, including: procurement, acquisition, loading, hauling, handling, safeguarding, transporting, placing, backfilling, compacting, installing, shaping, associated clean up and all items incidental to complete the work.

.1 Insulation will be field measured once installed, in width by length.

.2 Payment will be made for each field measured square metre of insulation correctly installed.

.18 The unit price bid for "25 mm Standpipe Installation" shall be considered full compensation for the supply off all materials, labour and equipment required for the installation of the Standpipes as shown on the drawings and/or location determined by Departmental Representative including: supply and delivery of materials, excavating and trenching to the required depth, supply and placement of granular bedding material, standpipe installation to the specified line and grade, saddle connection to water main, connections, mechanical thrust protection, cathodic protection, supply and install tee with 2 (Two) 19 mm hose bibs, supply and install curb stop and copper lead, supply and install irrigation box, backfilling, compaction, soil conditioning, dewatering, care of water, testing, flushing, and all work incidental to the completed drain valve chamber installation.

.1 Each Standpipe will be counted.

.2 Payment will be made for each Standpipe installed.

1.2 SANITARY SEWER

.1 The unit price bid for "200 mm dia. SDR 35 PVC Pipe" shall be considered full compensation for all materials, labour and equipment required for the installation of sanitary sewer line including: confirmation of existing tie-in inverts, supplying, loading, hauling, unloading of pipe, trenching to the required depth, supply and placement of granular bedding material, pipe installation to the specified line and grade, backfilling to roadway subgrade elevation, trench compaction, disposal of excess materials off site, connection to manholes, flushing, cleaning, CCTV inspection, and all work incidental to the completed installation of sanitary sewer line.

.1 Pipe will be measured horizontally, along the top of the pipe, from centreline of connection to centreline of connection.

.2 Payment will be made for each field measured lineal metre of pipe installed.

.2 The unit price bid for "Type 1 Manhole" shall be considered full compensation for all materials, labour and equipment required for the installation of Type 1 manholes, 1nclud1ng: excavation, disposal of waste excavation off-site, supply and install granular material, manhole base, manhole barrel, slab top, collars, frame & cover, grouting, all pipe tie-ins to manholes, backfilling, associated cleanup and all items incidental to complete the work.

.1 Each new manhole installed will be measured vertically in metres from top of cover (rim) to lowest pipe invert.

.2 Payment will be made for total vertical metres of manhole installed.

.3 The unit price bid for "Sanitary Sewer Line Tie-In –Main" shall be considered full compensation for all materials, labour and equipment required for tie-ins of new sanitary sewer lines to existing manholes including: digging, trenching, placing, supply and install couplers, sealing, backfilling, compacting, coordination and notification required for sanitary sewer service interruption, testing, and all work incidental to the completed tie-in.

.1 Each tie-in will be counted.

.2 Payment will be made for each completed connection to an existing manhole.

.4 The unit price bid for "Sanitary Sewer Service – 100 mm to Property Line (up to 15m)" shall be considered full compensation for all materials, labour and equipment required for tie-ins of new sanitary sewer lines to existing services including: digging, trenching, placing, backfilling to subgrade, compacting, disposal of excess material off site, coordination and notification required for sanitary sewer service interruption, supply and install pipe, supply and install saddle and connection to the sewer main, supply and install coupler to connect existing service to new service pipe, flushing, testing, and all work incidental to the completed tie-in. Supply and install bedding. Bedding should be installed from 100 mm below invert and 300 mm above tops of pipe.

.1 Each service tie-in will be counted.

.2 Payment will be made for each completed connection to an existing service.

.5 The unit price bid for "Sanitary Sewer Service – 100 mm to Parks House" shall be considered full compensation for all materials, labour and equipment required for tie-ins of new sanitary sewer lines to existing buildings including: digging, trenching, placing, backfilling to subgrade, compacting, disposal of excess material off site, coordination and notification required for sanitary sewer service interruption, supply and install of all required pipe up to the Parks Canada House, supply and install coupler to connect to the existing Parks Canada House, , supply and install saddle and connection to the sewer main, supply and install coupler to connect existing service to new service pipe, flushing, testing, and all work incidental to the completed tie-in. Supply and install bedding. Bedding should be installed from 100 mm below invert and 300 mm above tops of pipe.

.1 Each Parks Canada House tie-in will be counted.

.2 Payment will be made for each completed connection to an existing Parks House.

.6 The unit price bid for "Sanitary Sewer Service – 150 mm to Property Line (up to 15m)" shall be considered full compensation for all materials, labour and equipment required for tie-ins of new sanitary sewer lines to existing services including: digging, trenching, placing, backfilling to subgrade, compacting, disposal of excess material off site, coordination and notification required for sanitary sewer service interruption, supply and install pipe, supply and install saddle and connection to the sewer main, supply and install coupler to connect existing service to new service pipe, flushing, testing, and all work incidental to the completed tie-in. Supply and install bedding. Bedding should be installed from 100 mm below invert and 300 mm above tops of pipe.

.1 Each service tie-in will be counted.

.2 Payment will be made for each completed connection to an existing service.

.7 The unit price bid for "Sanitary Sewer Service – 150 mm to Parks Infrastructure" shall be considered full compensation for all materials, labour and equipment required for tie-ins of new sanitary sewer lines to existing infrastructure including: digging, trenching, placing, backfilling to subgrade, compacting, disposal of excess material off site, coordination and notification required for sanitary sewer service interruption, supply and install required length of pipe, supply and install saddle and connection to the sewer main, supply and install coupler to connect existing Parks Canada infrastructure to the new service pipe. , flushing, testing, and all work incidental to the completed tie-in.

.1 Each Parks Infrastructure tie-in will be counted.

.2 Payment will be made for each completed connection to existing Parks Infrastructure.

.8 The unit price bid for "Adjust Existing Manhole 10A to Grade" shall be considered full compensation for all materials, labour and equipment required to adjust the existing manhole to new asphalt grade including: special fittings, disposal of waste material off-site, and all work incidental to the completed manhole adjustment.

.1 Each manhole adjusted will be counted.

.2 Payment will be made for each adjusted manhole to final asphalt grades.

.9 The unit price bid for "200 mm dia. DR 17 HDPE Pipe" shall be considered full compensation for all materials, labour and equipment required for the supply of 200 mm DR 17 HDPE including: procuring, loading, hauling, handling, and all work incidental to the installation of DR 17 HDPE Pipe.

.1 Pipe will be measured horizontally, along the top of the pipe, from end to end.

.2 Payment will be made for each field measured lineal metre of pipe supplied.

.10 The unit price bid for "Remove and Dispose of Manhole" shall be considered full compensation for all materials, labour and equipment required for the removal and disposal of existing manhole, including: disposal of waste and surplus material off-site, rehabilitation of disturbed area to match immediate surrounding terrain, cleaning and all work incidental to the removal and disposal of an existing manhole.

.1 Each manhole will be counted.

.2 Payment will be made for each manhole successfully removed and properly disposed of.

.11 The unit price bid for "Pipe Bursting" shall be considered full compensation for all materials, labour and equipment required to replace mains by pipe bursting, including: supply and placement of pipe, insertions and retrieval pits, machine pits, pavement removal and replacement, testing and all work incidental to the completed pipe replacing.

.1 Pipe bursting will be measured horizontally, by GPS survey, from centreline of connection to centreline of connection.

.2 Payment will be made for each field measured lineal metre of pipe replaced by pipe bursting.

1.3 STORM SEWER

.1 The unit price bid for "250 mm dia. SDR 35 PVC Pipe" shall be considered full compensation for all materials, labour and equipment required for the installation of storm sewer line including: confirmation of existing tie-in inverts, supplying, loading,

hauling, unloading of pipe, trenching to the required depth, supply and placement of granular bedding material, pipe installation to the specified line and grade, backfilling to roadway subgrade elevation, trench compaction, disposal of excess materials off site, connection to manholes and catch basins, and all work incidental to the completed installation of storm sewer line.

.1 Pipe will be measured horizontally, along the top of the pipe, from centreline of connection to centreline of connection.

.2 Payment will be made for each field measured lineal metre of pipe installed.

.2 The unit price bid for "300 mm dia. SDR 35 PVC Pipe" shall be considered full compensation for all materials, labour and equipment required for the installation of storm sewer line including: confirmation of existing tie-in inverts, supplying, loading, hauling, unloading of pipe, trenching to the required depth, supply and placement of granular bedding material, pipe installation to the specified line and grade, backfilling to roadway subgrade elevation, trench compaction, disposal of excess materials off site, connection to manholes and catch basins, and all work incidental to the completed installation of storm sewer line.

.1 Pipe will be measured horizontally, along the top of the pipe, from centreline of connection to centreline of connection.

.2 Payment will be made for each field measured lineal metre of pipe installed.

.3 The unit price bid for "450 mm dia. SDR 35 PVC Pipe" shall be considered full compensation for all materials, labour and equipment required for the installation of storm sewer line including: confirmation of existing tie-in inverts, supplying, loading, hauling, unloading of pipe, trenching to the required depth, supply and placement of granular bedding material, pipe installation to the specified line and grade, backfilling to roadway subgrade elevation, trench compaction, disposal of excess materials off site, connection to manholes and catch basins, and all work incidental to the completed installation of storm sewer line.

.1 Pipe will be measured horizontally, along the top of the pipe, from centreline of connection to centreline of connection.

.2 Payment will be made for each field measured lineal metre of pipe installed.

.4 The unit price bid for "525 mm dia. SDR 35 PVC Pipe" shall be considered full compensation for all materials, labour and equipment required for the installation of storm sewer line including: confirmation of existing tie-in inverts, supplying, loading, hauling, unloading of pipe, trenching to the required depth, supply and placement of granular bedding material, pipe installation to the specified line and grade, backfilling to roadway subgrade elevation, trench compaction, disposal of excess materials off site, connection to manholes and catch basins, and all work incidental to the completed installation of storm sewer line.

.1 Pipe will be measured horizontally, along the top of the pipe, from centreline of connection to centreline of connection.

.2 Payment will be made for each field measured lineal metre of pipe installed.

.5 The unit price bid for "Catch Basin – Open Bottom, No Lead, c/w Frame and Grate" shall be considered full compensation for all materials, labour and equipment required for the installation of an open bottom catch basin, including: excavation, disposal of waste excavation off-site, supply and install granular material, catch basin barrel, weep holes,

filter cloth, slab top, collars, concrete benching, mortar, pre-cast frames, block out(s), grouting, covers, bricks, bedding, backfilling, associated cleanup and all items incidental to complete the work.

.1 Each new catch basin installed will be counted.

.2 Payment will be made for each catch basin installed.

.6 The unit price bid for "Catch Basin – Type 1 Barrel Including Round Top" shall be considered full compensation for all materials, labour and equipment required for the installation of a catch basins, including: excavation, disposal of waste excavation off-site, supply and install granular material, catch basin base, barrel, weep holes, filter cloth, slab top, collars, concrete benching, mortar, pre-cast frames, block out(s), grouting, covers, bricks, all pipe tie-ins, bedding, backfilling, associated cleanup and all items incidental to complete the work.

.1 Each new catch basin installed will be counted.

.2 Payment will be made for each catch basin installed.

.7 The unit price bid for "Catch Basin Manhole c/w Frame and Grate" shall be considered full compensation for all materials, labour and equipment required for the installation of a catch basins, including: excavation, disposal of waste excavation off-site, supply and install granular material, catch basin manhole base, barrel, weep holes, filter cloth, slab top, collars, concrete benching, mortar, pre-cast frames, block out(s), grouting, covers, bricks, all pipe tie-ins, bedding, backfilling, associated cleanup and all items incidental to complete the work.

.1 Each new catch basin manhole installed will be measured vertically in metres from top of cover (rim) to lowest pipe invert.

.2 Payment will be made for total vertical metres of catch basin manhole installed.

.8 The unit price bid for "Catch Basin Manhole c/w Frame and Grate – Open Bottom" shall be considered full compensation for all materials, labour and equipment required for the installation of a catch basins, including: excavation, disposal of waste excavation off-site, supply and install granular material, barrel, weep holes, filter cloth, slab top, collars, concrete benching, mortar, pre-cast frames, block out(s), grouting, covers, bricks, all pipe tie-ins, bedding, backfilling, associated cleanup and all items incidental to complete the work.

.1 Each new catch basin manhole installed will be measured vertically in metres from top of cover (rim) to bottom of catch basin manhole.

.2 Payment will be made for total vertical metres of catch basin manhole installed.

.9 The unit price bid for "Type 1 Manhole" shall be considered full compensation for all materials, labour and equipment required for the installation of Type 1 manholes, including: excavation, disposal of waste excavation off-site, supply and install granular material, manhole base, manhole barrel, slab top, collars, frame & cover, grouting, all pipe tie-ins to manholes, backfilling, associated cleanup and all items incidental to complete the work.

.1 Each new manhole installed will be measured vertically in metres from top of cover (rim) to lowest pipe invert.

.2 Payment will be made for total vertical metres of manhole installed.

.10 The unit price bid for "Type 1 Manhole – Open Bottom" shall be considered full compensation for all materials, labour and equipment required for the installation of open bottom Type I manholes, including: excavation, disposal of waste excavation off-site, supply and install granular material, manhole barrel, slab top, collars, frame & cover, grouting, all pipe tie-ins to manholes, backfilling, associated cleanup and all items incidental to complete the work.

.1 Each new manhole installed will be measured vertically in metres from top of cover (rim) to bottom of manhole.

.2 Payment will be made for total vertical metres of manhole installed.

.11 The lump sum bid for "Vault Structure – MH 504" shall be considered full compensation for all materials, labour and equipment required for the supply and installation of concrete vault – MH 504, including: excavation, disposal of waste excavation off-site, supply and install granular material, concrete vault, slab top, collars, frame & cover, grouting, all pipe tie-ins to manholes, backfilling, associated cleanup and all items incidental to complete the work.

.1 Lump Sum Payment will be made for Vault Structure installed.

.12 The unit price bid for "Adjust Existing Manhole or Catch Basin to Grade" shall be considered full compensation for all materials, labour and equipment required to adjust an existing manhole or catch basin to new asphalt grade including: special fittings, disposal of waste material off-site, and all work incidental to the completed manhole adjustment.

.1 Each manhole or manhole adjusted will be counted.

.2 Payment will be made for each adjusted manhole or catch basin to final asphalt grades.

1.4 CONCRETE

.1 The unit price bid for "Remove and Dispose Concrete Surfaces" shall be considered full compensation for all materials, labour and equipment required for the removal of concrete surfaces, including: cutting, jackhammering, excavating, breaking, demolishing, loading, hauling, disposal of waste material outside Waterton Park, cleaning, and all work incidental to the removal of concrete. Thickness of existing concrete surfaces to be removed estimated to be up to 200mm.

.1 Each surface will be measured individually in neat horizontal lines to the nearest square metre.

.2 Payment will be made for each square metre of concrete removed and disposed.

.2 The unit price bid for "Combined Sidewalk and Rolled Curb & Gutter" shall be considered full compensation for all materials, labour and equipment required to supply and install combined sidewalk and curb & gutter structures in accordance with the sections, alignments and grades specified, including: excavation, subgrade preparation, supply and install 100 mm depth of granular base, extruding, forming, tie-bar, doweling, placement, vibrating, finishing, stripping, curing and protection of the concrete, control joints expansion joints, isolation joints, backfilling between concrete and property line to subgrade elevation, compaction, associated clean up , and all work incidental to the installation of concrete sidewalk and curb & gutter.

.1 Each surface will be measured individually along the top of the curb.

.2 Payment will be made for each metre of combined sidewalk and curb & gutter installed.

.3 The unit price bid for "Wheelchair Ramp – Type 1" shall be considered full compensation for all materials, labour and equipment required to construct wheel chair ramps as shown on the drawings, including: excavation, subgrade preparation, supply and install 100 mm depth granular base, extruding, forming, tie-bar, doweling, placement, vibrating, finishing, stripping, curing and protection of the concrete, backfilling between concrete and property line to subgrade elevation, compaction, associated clean up, and all work incidental to the installation of wheelchair ramps.

.1 Each wheelchair ramp will be counted.

.2 Payment will be made for each wheelchair ramp installed.

.4 The unit price bid for "Wheelchair Ramp – Type 2" shall be considered full compensation for all materials, labour and equipment required to construct wheel chair ramps as shown on the drawings, including: excavation, subgrade preparation, supply and install 100 mm depth granular base, extruding, forming, tie-bar, doweling, placement, vibrating, finishing, stripping, curing and protection of the concrete, backfilling between concrete and property line to subgrade elevation, compaction, associated clean up, and all work incidental to the installation of wheelchair ramps.

.1 Each wheelchair ramp will be counted.

.2 Payment will be made for each wheelchair ramp installed.

.5 The unit price bid for "Concrete Swale – 1m Width" shall be considered full compensation for all materials, labour and equipment required to construct concrete swales as shown on the drawings, including: excavation, subgrade preparation, supply and install 100 mm depth granular base, extruding, forming, tie-bar, doweling, placement, vibrating, finishing, stripping, curing and protection of the concrete, control joints expansion joints, isolation joints, backfilling between concrete and property line to subgrade elevation, compaction, associated clean up, and all work incidental to the installation of concrete swales.

.1 The swale will be measured lineally along the centreline of the concrete swale.

.2 Payment will be made for each lineal metre of concrete swale installed.

.6 The unit price bid for "Rolled Curb & Gutter" shall be considered full compensation for all materials, labour and equipment required to supply and install rolled curb & gutter structures in accordance with the sections, alignments and grades specified, including: excavation, subgrade preparation, supply and install 100 mm depth granular base, extruding, forming, tie-bar, doweling, placement, vibrating, finishing, stripping, curing and protection of the concrete, control joints expansion joints, isolation joints, backfilling between concrete and property line to subgrade elevation, compaction, associated clean up, and all work incidental to the installation of concrete curb & gutter.

.1 Each surface will be measured individually along the top of the curb.

.2 Payment will be made for each metre of rolled curb & gutter installed.

.7 The unit price bid for "Standard Curb & Gutter" shall be considered full compensation for all materials, labour and equipment required to supply and install standard curb & gutter structures in accordance with the sections, alignments and grades specified,

including: excavation, subgrade preparation, supply and install 100 mm depth granular base, extruding, forming, tie-bar, doweling, placement, vibrating, finishing, stripping, curing and protection of the concrete, control joints expansion joints, isolation joints, backfilling between concrete and property line to subgrade elevation, compaction, associated clean up, and all work incidental to the installation of concrete curb & gutter.

.1 Each surface will be measured individually along the top of the curb.

.2 Payment will be made for each metre of standard curb & gutter installed.

.8 The unit price bid for High Back Standard Curb & Gutter" shall be considered full compensation for all materials, labour and equipment required to supply and install high back standard curb & gutter structures in accordance with the sections, alignments and grades specified, including: excavation, subgrade preparation, supply and install 100 mm depth granular base, extruding, forming, tie-bar, doweling, placement, vibrating, finishing, stripping, curing and protection of the concrete, control joints expansion joints, isolation joints, backfilling between concrete and property line to subgrade elevation, compaction, associated clean up, and all work incidental to the installation of concrete curb & gutter.

.1 Each surface will be measured individually along the top of the curb.

.2 Payment will be made for each metre of high back standard curb & gutter installed.

.9 The unit price bid for "Lane Crossing" shall be considered full compensation for all materials, labour and equipment required to construct lane crossings as shown on the drawings, including: excavation, subgrade preparation, supply and install 100 mm depth granular base, extruding, forming, tie-bar, doweling, placement, vibrating, finishing, stripping, curing and protection of the concrete, control joints expansion joints, isolation joints, backfilling between concrete and property line to subgrade elevation, compaction, associated clean up, and all work incidental to the installation of lane crossings.

.1 Each lane crossing will be measured individually along the back of sidewalk.

.2 Payment will be made for each lineal metre of lane crossing installed.

.10 The unit price bid for "Separate Sidewalk – 130 mm Depth" shall be considered full compensation for all materials, labour and equipment required to supply and install sidewalk structures in accordance with the sections, alignments and grades specified, including: excavation, subgrade preparation, supply and install 100 mm depth granular base, extruding, forming, tie-bar, doweling, placement, vibrating, finishing, stripping, curing and protection of the concrete, control joints expansion joints, isolation joints, backfilling between concrete and property line to subgrade elevation, compaction, associated clean up, and all work incidental to the installation of concrete sidewalk.

.1 Each area of approved concrete surfacing will be measured by length and average width to produce an area in square metres.

.2 Payment will be made per square metre of sidewalk installed.

.11 The unit price bid for "Concrete Surfacing – 130 mm Depth" shall be considered full compensation for all materials, labour and equipment required to supply and install concrete structures in accordance with the sections, alignments and grades specified, including: excavation, subgrade preparation, supply and install 100 mm depth granular base, extruding, forming, tie-bar, doweling, placement, vibrating, finishing, stripping, curing and protection of the concrete, control joints expansion joints, isolation joints,

backfilling between concrete and property line to subgrade elevation, compaction, associated clean up, and all items incidental to complete the work.

.1 Each area of approved concrete surfacing will be measured by length and average width to produce an area in square metres.

.2 Payment will be made per square area of Concrete Surfacing.

1.5 SURFACE WORKS

.1 The unit price bid for "Saw Cutting" shall be considered full compensation for all materials, labour and equipment required for cutting, excavating, removing, breaking, loading, hauling, disposal off-site, associated clean-up and all work incidental to saw cutting asphalt.

.1 Saw cuts will be measured down the centreline of the cut.

.2 Payment will be made for each metre of saw cut.

.2 The unit price bid for "Cold Milling Asphalt Pavement" shall be considered full compensation for all materials, labour and equipment required for removing all asphalt as shown on the drawings, including: removing, breaking, crushing or milling to 25 mm minus for use as road bed, loading, hauling, stockpiling, associated clean-up and all work incidental to asphalt milling.

.1 All milling will be counted as a unit.

.2 Lump sum payment will be made for asphalt milling.

.3 The unit price bid for "Subgrade Preparation" shall be considered full compensation for all materials, labour and equipment required for preparing the subgrade surface for surfacing, including scarifying, placing, blading, mixing, shaping, grading, moisture conditioning, compacting, maintaining, proof rolling, associated clean up and all work incidental to complete the work. This shall include the undercut and subsequent prep of minor "soft spots" to ensure an approved subgrade surface.

.1 Each area of approved prepared subgrade will be measured by length and average width to produce an area in square metres.

.2 Payment will be made for each square metre of approved prepared subgrade surface.

.4 The unit price bid for "Type III Asphalt Concrete Paving – 75 mm Depth" shall be considered full compensation for all materials, labour and equipment required for preparation of the job mix design and job mix formula, supply and placement of prime coat and tack coat where required, supply of aggregates and asphalt cement, mixing, transporting, placing, spreading, shaping, raking, ramping around appurtenances and compacting the asphalt to the specified thickness and density, associated clean up and all work incidental to complete the work.

.1 Each area will be measured by GPS survey.

.2 Payment will be made for each area of asphalt correctly placed to specifications.

.5 The unit price bid for "Type III Asphalt Concrete Paving – 100 mm Depth" shall be considered full compensation for all materials, labour and equipment required for preparation of the job mix design and job mix formula, supply and placement of prime coat and tack coat where required, supply of aggregates and asphalt cement, mixing, transporting, placing, spreading, shaping, raking, ramping around appurtenances and

compacting the asphalt to the specified thickness and density, associated clean up and all work incidental to complete the work.

.1 Each area will be measured by GPS survey.

.2 Payment will be made for each area of asphalt correctly placed to specifications.

.6 The unit price bid for "Granular Base Course – 75 mm Depth" shall be considered full compensation for all materials, labour and equipment required for the supply, placement and compaction of granular base course in accordance with limit lines, compacted depths, densities, moisture content and grades specified, including: procurement, loading, processing, hauling, placing, shaping, grading, compacting, applying blotting sand when required, moisture conditioning, proof rolling, maintaining, interim lane marking, material certification, quality control, associated clean up and all items incidental to complete the work.

.1 Each area of approved granular base course will be measured by length and average width to produce an area in square metres.

.2 Payment will be made for each area of approved granular base course.

.7 The unit price bid for "Recycled Asphalt Base Course – 75 mm Depth" shall be considered full compensation for all materials, labour and equipment required for RAP surfacing, including processing, loading, hauling, placing and compacting of millings on the road surface, associated clean up and all items incidental to complete the work.

.1 Recycled Asphalt Pavement Surfacing will be measured by length and average width of approved surface.

.2 Payment will be made for each area of approved recycled asphalt pavement surfacing.

.8 The unit price bid for "Recycled Asphalt Base Course – 125 mm Depth" shall be considered full compensation for all materials, labour and equipment required for RAP surfacing, including processing, loading, hauling, placing and compacting of millings on the road surface, associated clean up and all items incidental to complete the work.

.1 Recycled Asphalt Pavement Surfacing will be measured by length and average width of approved surface.

.2 Payment will be made for each area of approved recycled asphalt pavement surfacing.

.9 The unit price bid for "Line Painting – Parking Stalls (100mm White)" shall be considered full compensation for all materials, labour and equipment required for completing 100 mm wide line painting, including inspecting the areas to be painted, sweeping and cleaning of surfaces, supplying of paint and glass beads, completing temporary markings, traffic accommodation, painting to the specified locations and colours, associated clean up and all items incidental to complete the work.

.1 Lines will be measured along the centreline of the completed painted 100 mm line.

.2 Payment will be made for each lineal metre of painted 100 mm line.

.10 The unit price bid for "Line Painting – Zebra Crosswalk (600mm White)" shall be considered full compensation for all materials, labour and equipment required for completing 600 mm wide line painting, including inspecting the areas to be painted, sweeping and cleaning of surfaces, supplying of paint and glass beads, completing

temporary markings, traffic accommodation, painting to the specified locations and colours, associated clean up and all items incidental to complete the work.

.1 Lines will be measured along the centreline of each 600 mm line.

.2 Payment will be made for each lineal metre of painted 600 mm line.

.11 The unit price bid for "Line Painting – Centreline Directional Dividing (100mm Yellow)" shall be considered full compensation for all materials, labour and equipment required for completing 100 mm wide line painting, including inspecting the areas to be painted, sweeping and cleaning of surfaces, supplying of paint and glass beads, completing temporary markings, traffic accommodation, painting to the specified locations and colours, associated clean up and all items incidental to complete the work.

.1 Lines will be measured along the centreline of the completed painted 100 mm line.

.2 Payment will be made for each lineal metre of painted 100 mm line.

.12 The unit price bid for "Line Painting – Messages" shall be considered full compensation for all materials, labour and equipment required for completing handicap parking symbols, arrow painting, and verbal messages (300mm high) including inspecting the areas to be painted, sweeping and cleaning of surfaces, stenciling, supplying of paint and glass beads, completing temporary markings, traffic accommodation, painting to the specified locations and colours, associated clean up and all items incidental to complete the work.

.1 Each Message will be counted.

.2 Payment will be made for each message satisfactorily painted.

.13 The lumps sum bid for "Line Painting – No Parking Zones (300mm White) shall be considered full compensation for all materials, labour and equipment required for completing no parking zone areas as shown on the drawings, including inspecting the areas to be painted, sweeping and cleaning of surfaces, stenciling, supplying of paint and glass beads, completing temporary markings, traffic accommodation, painting to the specified locations and colours, associated clean up and all items incidental to complete the work.

.1 Lump Sum Payment will be made for completion of all no parking zones as shown on the drawings.

1.6 MISCELLANEOUS

.1 The unit price bid for "Supply and Install Post and Rail" shall be considered full compensation for all materials, labour and equipment required for the supply, and installation of new post & rail fence, including: procurement, acquisition, loading, hauling, handling, storing, safeguarding, placement, installation, associated clean up and all items incidental to complete the work.

.1 Measurement will be taken along the centreline of installed fence.

.2 Payment will be made for each lineal metre of installed fence.

.2 The unit price bid for "Remove and Dispose Tree" shall be considered full compensation for all materials, labour and equipment required for the removal and off-site disposal of roots, stumps and branches under 75 mm diameter, including: cutting of all wood 75 mm

diameter and greater into 400 mm lengths to be hauled to an area designated by the Departmental Representative, excavating roots to a 1 metre depth, excavating, loading, hauling, backfilling, compacting, associated clean up and all items incidental to complete the work.

.1 Each removed tree will be counted.

.2 Payment will be made for each tree removed.

.3 The unit price bid for "Remove and Transplant Tree" shall be considered full compensation for all materials, labour and equipment required for the removal and transplanting of trees, including: excavating, backfilling, loading, hauling, handling, safeguarding, transporting, planting, backfilling, compacting, watering, staking, associated clean up and all items incidental to complete the work.

.1 Each removed and transplanted tree will be counted.

.2 Payment will be made for each tree removed and transplanted.

.4 The unit price bid for "Supply and Plant Approved Tree" shall be considered full compensation for all materials, labour and equipment required for the supply and planting of trees, including: procurement, loading, hauling, handling, safeguarding, transporting, excavation, planting, backfilling, compacting, watering, staking, associated clean up and all items incidental to complete the work. This includes the supply and installation of topsoil.

.1 Each planted tree will be counted.

.2 Payment will be made for each tree planted.

.5 The unit price bid for "Remove, Salvage and Reinstall Garbage Bin" shall be considered full compensation for all materials, labour and equipment required for the removal and reinstallation of bear-proof garbage bins, including: excavating, loading, hauling, handling, safeguarding, transporting, excavation, construction of concrete base including rebar, backfilling, compacting, installing, associated clean up and all items incidental to complete the work. The concrete base detail needs to be added to the drawing set.

.1 Each reinstalled garbage bin will be counted.

.2 Payment will be made for each relocated garbage bin.

.6 The unit price bid for "Remove, Salvage and Reinstall Sign" shall be considered full compensation for all materials, labour and equipment required for the removal and reinstallation of signs, including: removing, loading, hauling, handling, safeguarding, transporting, backfilling, compacting, installing, shaping, associated clean up and all items incidental to complete the work.

.1 Each reinstalled sign will be counted.

.2 Payment will be made for each relocated sign.

.7 The unit price bid for "Topsoil Placement and Grading" shall be considered full compensation for all materials, labour and equipment required for the placement of topsoil including: spreading, trimming, blading, shaping finishing, associated clean up and all items incidental to complete the work. Topsoil stripping shall be considered incidental to the work.

.1 Each topsoiled area will be measured by length and average width to produce an area in square metres.

.2 Payment will be made for each square metre of area topsoil placed and graded prior to seeding

.8 The unit price bid for "Imported Topsoil" shall be considered full compensation for the supply and import of topsoil from a supplier approved by the Departmental Representative, mixing of imported topsoil with native topsoil stockpiled in the Upper Compound, all labour, materials, equipment, tools and incidentals necessary to complete the Work to the satisfaction of the Departmental Representative.

.1 Measurement of Imported Topsoil will in cubic meters base on truck box measurement. The capacity of the hauling vehicles will be measured by the Departmental Representative. The measurements will be to the nearest 0.1 cubic metre capacity.

.2 Payment for Imported Topsoil will be made at the unit price bid per cubic metre.

.9 The unit price bid for "Hydro-Seeding" shall be considered full compensation for the supply and placement of seed, hydro-mulch and reseeding as applicable, and includes all labour, materials, equipment, tools and incidentals necessary to complete the Work to the satisfaction of the Departmental Representative. The repair of eroded areas prior to seeding will be considered incidental to the Work and no separate payment will be made.

.1 Seeding will be measured in square meters to the based on horizontal measurements as determined by the Departmental Representative. No allowance will be made for uneven or sloping ground, overlap.

.2 Payment for Hydro-Seeding will be made at the unit price bid per square metre

.10 The unit price for "PVC Conduits" shall be considered full compensation for the supply and placement of conduits, backfill, installation of warning tape, and includes all labour, materials, equipment, tools and incidentals necessary to complete the Work to the satisfaction of the Departmental Representative. Conduits shall be Polytubes, Carlon or approved equivalent. Excavation, backfill and bedding are to be considered incidental to the unit rate. Bedding must be placed a minimum of 150 mm above the conduit.

.1 Measurement will be taken along the centreline of installed conduit.

.2 Payment will be made for each lineal metre installed conduit.

1.7 APPLICATIONS FOR PROGRESS PAYMENT

.1 Date applications for payment last day of agreed monthly payment period and ensure amount claimed is for value, proportionate to amount of Contract, of Work performed and Products delivered to Place of Work at that date.

.2 Support claims for products delivered to Place of Work but not yet incorporated into Work by such evidence as Departmental Representative may reasonably require to establish value and delivery of products.

Part 2 Products

2.1 NOT USED

.1 Not Used.

Part 3 Execution

3.1 NOT USED

.1 Not Used.

END OF SECTION

Part 1 General

1.1 ADMINISTRATIVE

.1 Submit to Departmental Representative submittals listed for review. Submit promptly and in orderly sequence to not cause delay in Work. Failure to submit in ample time is not considered sufficient reason for extension of Contract Time and no claim for extension by reason of such default will be allowed.

.2 Do not proceed with Work affected by submittal until review is complete.

.3 Present shop drawings, product data, samples and mock-ups in SI Metric units.

.4 Where items or information is not produced in SI Metric units converted values are acceptable.

.5 Review submittals prior to submission to Departmental Representative. This review represents that necessary requirements have been determined and verified, or will be, and that each submittal has been checked and co-ordinated with requirements of Work and Contract Documents. Submittals not stamped, signed, dated and identified as to specific project will be returned without being examined and considered rejected.

.6 Notify Departmental Representative in writing at time of submission, identifying deviations from requirements of Contract Documents stating reasons for deviations.

.7 Verify field measurements and affected adjacent Work are co-ordinated.

.8 Contractor's responsibility for errors and omissions in submission is not relieved by Departmental Representatives review of submittals.

.9 Contractor's responsibility for deviations in submission from requirements of Contract Documents is not relieved by Departmental Representative’s review.

.10 Keep one reviewed copy of each submission on site.

1.2 SHOP DRAWINGS AND PRODUCT DATA

.1 The term "shop drawings" means drawings, diagrams, illustrations, schedules, performance charts, brochures and other data which are to be provided by Contractor to illustrate details of a portion of Work.

.2 Submit drawings stamped and signed by professional Departmental Representative registered or licensed in Alberta of Canada.

.3 Indicate materials, methods of construction and attachment or anchorage, erection diagrams, connections, explanatory notes and other information necessary for completion of Work. Where articles or equipment attach or connect to other articles or equipment, indicate that such items have been co-ordinated, regardless of Section under which adjacent items will be supplied and installed. Indicate cross references to design drawings and specifications.

.4 Allow 7 days for Departmental Representative’s review of each submission.

.5 Adjustments made on shop drawings by Departmental Representative are not intended to change Contract Price. If adjustments affect value of Work, state such in writing to Departmental Representative prior to proceeding with Work.

.6 Make changes in shop drawings as Departmental Representative may require, consistent with Contract Documents. When resubmitting, notify Departmental Representative in writing of revisions other than those requested.

.7 Accompany submissions with transmittal letter, in duplicate, containing:

- .1 Date.
- .2 Project title and number.
- .3 Contractor's name and address.
- .4 Identification and quantity of each shop drawing, product data and sample.
- .5 Other pertinent data.

.8 Submissions include:

- .1 Date and revision dates.
- .2 Project title and number.
- .3 Name and address of:
  - .1 Subcontractor.
  - .2 Supplier.
  - .3 Manufacturer.
- .4 Contractor's stamp, signed by Contractor's authorized representative certifying approval of submissions, verification of field measurements and compliance with Contract Documents.
- .5 Details of appropriate portions of Work as applicable:
  - .1 Fabrication.
  - .2 Layout, showing dimensions, including identified field dimensions, and clearances.
  - .3 Setting or erection details.
  - .4 Capacities.
  - .5 Performance characteristics.
  - .6 Standards.
  - .7 Operating weight.
  - .8 Wiring diagrams.
  - .9 Single line and schematic diagrams.
  - .10 Relationship to adjacent work.

.9 After Departmental Representative’s review, distribute copies.

.10 Submit PDF copies of shop drawings for each requirement requested in specification Sections and as Departmental Representative may reasonably request.

.11 Submit PDF of product data sheets or brochures for requirements requested in specification Sections and as requested by Departmental Representative where shop drawings will not be prepared due to standardized manufacture of product.

.12 Submit PDF copies of Operation and Maintenance Data for requirements requested in specification Sections and as requested by Departmental Representative

.13 Delete information not applicable to project.

.14 Supplement standard information to provide details applicable to project.

.15 If upon review by Departmental Representative no errors or omissions are discovered or if only minor corrections are made, copies will be returned and fabrication and installation of Work may proceed. If shop drawings are rejected, noted copy will be returned and resubmission of corrected shop drawings, through same procedure indicated above, must be performed before fabrication and installation of Work may proceed.

.16 The review of shop drawings by Public Works and Government Services Canada (PWGSC) is for sole purpose of ascertaining conformance with general concept.

.1 This review shall not mean that PWGSC approves detail design inherent in shop drawings, responsibility for which shall remain with Contractor submitting same, and such review shall not relieve Contractor of responsibility for errors or omissions in shop drawings or of responsibility for meeting requirements of construction and Contract Documents.

.2 Without restricting generality of foregoing, Contractor is responsible for dimensions to be confirmed and correlated at job site, for information that pertains solely to fabrication processes or to techniques of construction and installation and for co-ordination of Work of sub-trades.

1.3 SAMPLES

.1 Submit for review samples in duplicates requested in respective specification Sections. Label samples with origin and intended use.

.2 Deliver samples prepaid to Departmental Representative's site office

.3 Notify Departmental Representative in writing, at time of submission of deviations in samples from requirements of Contract Documents.

.4 Where colour, pattern or texture is criterion, submit full range of samples.

.5 Adjustments made on samples by Departmental Representative are not intended to change Contract Price. If adjustments affect value of Work, state such in writing to Departmental Representative prior to proceeding with Work.

.6 Make changes in samples which Departmental Representative may require, consistent with Contract Documents.

.7 Reviewed and accepted samples will become standard of workmanship and material against which installed Work will be verified.

1.4 PHOTOGRAPHIC DOCUMENTATION

.1 Submit electronic copy of colour digital photography in jpeg, standard resolution or PDF

.2 Take daily photographs of all utility and underground work

.3 Take photographs of site conditions before, during, and after construction. Take photographs of any unique or unusual items.

.4 Photographs to be submitted on CD. All photographs to be labelled with meaningful titles.

1.5 CERTIFICATES AND TRANSCRIPTS

.1 Immediately after award of Contract, submit Workers' Compensation Board status.

.2 Submit transcription of insurance immediately after award of Contract.

Part 2 Products

2.1 NOT USED

.1 Not Used.

Part 3 Execution

3.1 NOT USED

.1 Not Used.

END OF SECTION

Part 1 General

1.1 MEASUREMENT PROCEDURES

.1 Cost of traffic control will not be paid for directly, but shall be considered incidental to contract unit prices tendered

1.2 REFERENCES

.1 Alberta Transportation

.1 Traffic Accommodation in Work Zones - 2008.

1.3 PROTECTION OF PUBLIC TRAFFIC

.1 Comply with requirements of Acts, Regulations and By-Laws in force for regulation of traffic or use of roadways upon or over which it is necessary to carry out Work or haul materials or equipment.

.2 When working on travelled way:

.1 Place equipment in position to minimize interference and hazard to travelling public.

.2 Keep equipment units as close together as working conditions permit and preferably on same side of travelled way.

.3 Do not leave equipment on travelled way overnight.

.3 Close lanes of road only after receipt of written approval from Departmental Representative

.1 Before re-routing traffic erect suitable signs and devices in accordance to Manual of Uniform Traffic Control Devices for Streets and Highways

.4 Keep travelled way graded, free from pot holes and of sufficient width for required number of lanes of traffic.

.1 Provide 7m wide minimum temporary roadway for traffic in two-way sections through Work and on detours.

.2 Provide 5m wide minimum temporary roadway for traffic in one-way sections through Work and on detours.

.5 Provide and maintain road access and egress to property fronting along Work under Contract and in other areas as indicated, except where other means of road access exist that meet approval of Departmental Representative.

1.4 INFORMATIONAL AND WARNING DEVICES

.1 Contractor shall submit a Traffic Accommodation Strategy (TAS) prior to commencement of work.

.2 Provide and maintain signs, flashing warning lights and other devices required to indicate construction activities or other temporary and unusual conditions resulting from Project Work which requires road user response.

.3 Supply and erect signs, delineators, barricades and miscellaneous warning devices as specified in Manual of Uniform Traffic Control Devices for Streets and Highways.

.4 Place signs and other devices in locations recommended in Manual of Uniform Traffic Control Devices for Streets and Highways.

.5 Meet with Departmental Representative prior to commencement of Work to prepare list of signs and other devices required for project. If situation on site changes, revise list to approval of Departmental Representative.

.6 Continually maintain traffic control devices in use:

.1 Check signs daily for legibility, damage, suitability and location. Clean, repair or replace to ensure clarity and reflectance.

.2 Remove or cover signs which do not apply to conditions existing from day to day.

1.5 CONTROL OF PUBLIC TRAFFIC

.1 Provide competent flag personnel, trained in accordance with, and properly equipped as specified in Manual of Uniform Traffic Control Devices for Streets and Highways for situations as follows:

.1 When public traffic is required to pass working vehicles or equipment that block all or part of travelled roadway.

.2 When it is necessary to institute one-way traffic system through construction area or other blockage where traffic volumes are heavy, approach speeds are high and traffic signal system is not in use.

.3 When workmen or equipment are employed on travelled way over brow of hills, around sharp curves or at other locations where oncoming traffic would not otherwise have adequate warning.

.4 Where temporary protection is required while other traffic control devices are being erected or taken down.

.5 For emergency protection when other traffic control devices are not readily available.

.6 In situations where complete protection for workers, working equipment and public traffic is not provided by other traffic control devices.

Part 2 Products

2.1 NOT USED

.1 Not Used.

Part 3 Execution

3.1 NOT USED

.1 Not Used.

END OF SECTION

Part 1 General

1.1 REFERENCES

.1 Canada Labour Code, Part 2, Canada Occupational Safety and Health Regulations

.2 Province of Alberta

.1 Occupational Health and Safety Act, R.S.A. - Updated 2013.

1.2 ACTION AND INFORMATIONAL SUBMITTALS

.1 Submit in accordance with Section 01 33 00 - Submittal Procedures.

.2 Submit site-specific Health and Safety Plan: Within 7 days after date of Notice to Proceed and prior to commencement of Work. Health and Safety Plan must include:

.1 Results of site specific safety hazard assessment.

.2 Results of safety and health risk or hazard analysis for site tasks and operation.

.3 Submit 1 copy of Contractor's authorized representative's work site health and safety inspection reports to Departmental Representative weekly, including minutes of safety toolbox meetings.

.4 Submit copies of reports or directions issued by Federal, Provincial and Territorial health and safety inspectors.

.5 Submit copies of incident and accident reports.

.6 Submit WHMIS MSDS - Material Safety Data Sheets to Departmental Representative.

.7 Departmental Representative will review Contractor's site-specific Health and Safety Plan and provide comments to Contractor within 3 days after receipt of plan. Revise plan as appropriate and resubmit plan to Departmental Representative within 3 days after receipt of comments from Departmental Representative.

.8 Departmental Representative’s review of Contractor's final Health and Safety plan should not be construed as approval and does not reduce the Contractor's overall responsibility for construction Health and Safety.

.9 Medical Surveillance: where prescribed by legislation, regulation or safety program, submit certification of medical surveillance for site personnel prior to commencement of Work, and submit additional certifications for any new site personnel to Departmental Representative.

.10 On-site Contingency and Emergency Response Plan: address standard operating procedures to be implemented during emergency situations.

.1 Emergencies: In the event of emergency call (403) 859-2636.

.2 All other inquiries: Parks Canada Switch Board (403) 859-2224.

1.3 FILING OF NOTICE

.1 File Notice of Project with Provincial authorities prior to beginning of Work.

1.4 SAFETY ASSESSMENT

.1 Perform site specific safety hazard assessment related to project.

1.5 MEETINGS

.1 Schedule and administer Health and Safety meeting with Departmental Representative prior to commencement of Work.

1.6 REGULATORY REQUIREMENTS

.1 Do Work in accordance with Section 01 41 00 - Regulatory Requirements.

1.7 GENERAL REQUIREMENTS

.1 Develop written site-specific Health and Safety Plan based on hazard assessment prior to beginning site Work and continue to implement, maintain, and enforce plan until final demobilization from site. Health and Safety Plan must address project specifications.

.2 Departmental Representative may respond in writing, where deficiencies or concerns are noted and may request re-submission with correction of deficiencies or concerns.

1.8 RESPONSIBILITY

.1 Be responsible for health and safety of persons on site, safety of property on site and for protection of persons adjacent to site and environment to extent that they may be affected by conduct of Work.

.2 Comply with and enforce compliance by employees with safety requirements of Contract Documents, applicable federal, provincial, territorial and local statutes, regulations, and ordinances, and with site-specific Health and Safety Plan.

1.9 COMPLIANCE REQUIREMENTS

.1 Comply with Occupational Health and Safety Act, General Safety Regulation, Alberta Reg.

.2 Comply with R.S.Q., c. S-2.1, an Act respecting Health and Safety, and c. S-2.1, r.4 Safety Code for the Construction Industry.

.3 Comply with Occupational Health and Safety Regulations, 1996.

.4 Comply with Canada Labour Code, Canada Occupational Safety and Health Regulations.

1.10 UNFORSEEN HAZARDS

.1 When unforeseen or peculiar safety-related factor, hazard, or condition occur during performance of Work, follow procedures in place for Employee's Right to Refuse Work in accordance with Acts and Regulations of Province having jurisdiction and advise Departmental Representative verbally and in writing.

1.11 POSTING OF DOCUMENTS

.1 Ensure applicable items, articles, notices and orders are posted in conspicuous location on site in accordance with Acts and Regulations of Province having jurisdiction, and in consultation with Departmental Representative.

1.12 CORRECTION OF NON-COMPLIANCE

.1 Immediately address health and safety non-compliance issues identified by authority having jurisdiction or by Departmental Representative.

.2 Provide Departmental Representative with written report of action taken to correct non-compliance of health and safety issues identified.

.3 Departmental Representative may stop Work if non-compliance of health and safety regulations is not corrected.

1.13 WORK STOPPAGE

.1 Give precedence to safety and health of public and site personnel and protection of environment over cost and schedule considerations for Work.

Part 2 Products

2.1 NOT USED

.1 Not used.

Part 3 Execution

3.1 NOT USED

.1 Not used.

END OF SECTION

1.1 NATIONAL PARKS ACT

.1 Perform work in accordance with the ordinances and laws set out in the National Parks Act and Regulations.

1.2 CANADIAN ENVIRONMENTAL ASSESSMENT ACT

.1 Execution of work is subject to provisions within the Canadian Environmental Assessment Act, 2012.

.2 Failure to comply with or observe environmental protection measures, as identified in these specifications, may result in work being suspended pending rectification of problem(s).

1.3 RELICS AND ANTIQUITIES

.1 Give immediate notice to the Departmental Representative if evidence archaeological finds are encountered during construction, and await Departmental Representative's written instructions before proceeding with work in this area.

.2 Relics, antiquities, items of historical or scientific interest such as cornerstones and contents, commemorative plaques, inscribed tablets, and similar objects found on site shall remain Department's property. Protect such articles and request directives from Departmental Representative.

.3 Provide 48 hours notice to Departmental Representative prior to commencing any work that may interfere with or affect an identified historical or archaeological site. Commence work only upon written instructions from Departmental Representative.

1.4 WILDLIFE

.1 Avoid or terminate activities on site that attract or harass wildlife.

.2 Immediately notify Departmental Representative who will notify Park Warden Service of bear activity or encounters on or around site. Other wildlife encounters should be reported within 24 hours.

1.5 FIRES

.1 Fires and burning of rubbish on site not permitted.

1.6 DISPOSAL OF WASTE

.1 All garbage must be stored and handled in conformance with National Parks Garbage Regulations.

.2 All domestic garbage should be stored over the short term in wildlife-proof dumpsters. Domestic recycling should be put in appropriate facilities. Contaminated materials are to be taken out of the Park.

.3 Do not bury rubbish and waste materials on site.

.4 Maintain the site in a tidy condition, free of waste material, debris and litter.

1.7 DRAINAGE

.1 Provide temporary drainage and pumping as necessary to keep excavations and site free from water.

.2 Dewatering of a construction site will require a special permit.

.3 Do not pump water containing suspended materials into waterways, sewer or drainage systems.

.4 Control disposal or runoff of water containing suspended materials or other harmful substances in accordance with Parks Canada requirements and in conformance with the Environmental Contaminants Act and applicable provincial regulations while observing the Code of Good Practice for Management of Hazardous and Toxic Wastes at Federal Establishments.

1.8 SITE CLEARING AND PLANT PROTECTION

.1 Protect trees and plants on site and adjacent properties where indicated.

.2 Where absolutely necessary to work adjacent to existing trees and shrubs, Contractor shall exercise all possible care to avoid injury to vegetation. Where roots or limbs over 25 mm in diameter and bark are damaged during operations, trim damaged portion and immediately inform Departmental Representative for inspection and approval.

.3 Permits are required from Park Warden Service if a tree is to be removed. Contact Warden Office at (403) 859-5140. Municipal Officer may also give permission for a dead tree to be removed without the consent of Park Warden Service. Three young trees, from Waterton's native species or approved introduced species list, must be planted for each tree removed.

.4 Park Warden Service (and the Municipal Officer) has a list of native grasses, shrubs, flowers and trees for appropriate revegetating.

1.9 WORK ADJACENT TO WATERWAYS

.1 Do not operate construction equipment in waterways.

.2 Do not use waterway beds for borrow material.

.3 Do not dump excavated fill, waste material or debris in waterways.

.4 Design and construct temporary crossings to minimize erosion to waterways.

.5 Do not skid logs or construction materials across waterways.

.6 Avoid indicated spawning beds when constructing temporary crossings of waterways.

.7 Do not blast under water or within 100 m of indicated spawning beds.

.8 Fueling operations and fuel storage shall be at least 200 m away from watercourses, in consultation with Park Warden Service.

1.10 CONTRACTOR'S OPERATIONS

.1 Confine all operations to work limits as staked or designated by Departmental Representative. No activities of any kind may be carried out beyond those work limits without Departmental Representative's written permission.

.2 Do not store or stockpile construction materials in trees bordering, or being preserved on site. Do not unreasonably encumber site with products.

.3 Equipment maintenance shall only be carried out in designated areas or as approved by Departmental Representative and Park Warden Service. Use of turnouts, campgrounds, picnic areas, work camps, etc., for equipment oil changes and other servicing will not be permitted.

.4 Used oil, filter and grease cartridges, lubrication containers and other products of equipment maintenance shall be collected and disposed of at nearest industrial waste facility.

.5 Provide sufficient sanitary facilities and maintain in a clean condition.

.6 Obtain permit from Park Warden Service for storage of fuel or other inflammable liquids. Observe all restrictions and conditions imposed by permit regarding special protection and berming to control spills and tank damage; fire protection considerations; provisions for disposal of fouled material and used petroleum products

.7 Conduct operations at all times in such a manner as to preserve natural features and vegetation in area. Cut and fill slopes shall be blended with adjoining topography. Material from fill slopes will not be permitted to slough or roll into surrounding tree cover or to bury any plant material designated to be retained.

.8 When, in opinion of Departmental Representative, negligence on part of Contractor results in damage or destruction of vegetation, or other environmental or aesthetic features beyond staked or designated work areas, Contractor shall be responsible, at his expense, for complete restoration of trees including replacement of trees, shrubs, topsoil, grass, etc. to Departmental Representative's satisfaction.

.9 As no non-native vegetation is allowed in Park, all construction equipment shall be thoroughly washed before entering Waterton National Park.

1.11 CONTRACTOR'S EMPLOYEE BRIEFING

.1 Conduct briefing sessions for all employees and sub-contractor employees highlighting requirements of this section, including operation of equipment strictly.

.2 Initial site meeting with Contractor, Departmental Representative, Park Project Manager and Park Warden Service will occur prior to construction commencing.

.3 Contract documents have been developed in accordance with Canadian Environmental Assessment Act screening requirements. Construction methods which are directly affected by CEAA screening will be reviewed at initial site meeting. Contractor will be expected to comply with and ensure construction practices meet the CEAA Standards. Failure to comply may lead to cessation of work.

1.12 COMPLIANCE WITH PARKS CANADA DEVELOPMENT PERMIT

.1 Read, understand and comply with Parks Canada Development Permit and all stipulations provided therein.

1.13 MEASUREMENT AND PAYMENT

.1 Cost of environmental and aesthetic protection will not be paid for directly, but shall be considered incidental to contract unit prices tendered.

END OF SECTION

Part 1 General

1.1 REFERENCES AND CODES

.1 Perform Work in accordance with National Building Code of Canada (NBC) including amendments up to tender closing date and other codes of provincial or local application provided that in case of conflict or discrepancy, more stringent requirements apply.

.2 Meet or exceed requirements of:

.1 Contract documents.

.2 Specified standards, codes and referenced documents.

1.2 WHMIS

.1 Comply with requirements of Workplace Hazardous Materials Information System (WHMIS) regarding use, handling, storage, and disposal of hazardous materials; and regarding labelling and provision of material safety data sheets acceptable to Labour Canada and Health and Welfare Canada.

1.3 BUILDING SMOKING ENVIRONMENT

.1 Comply with smoking restrictions and municipal by-laws.

1.4 NATIONAL PARKS ACT

.1 Perform Work in accordance with National Parks Act when projects are located within boundaries of National Park.

Part 2 Products

2.1 NOT USED

.1 Not Used.

Part 3 Execution

3.1 NOT USED

.1 Not Used.

END OF SECTION

Part 1 General

.1 The Contractor is totally responsible for quality of Material and Product which he provides for the Work.

.2 The Contractor is responsible for quality control and shall perform such inspections and tests as are necessary to ensure that the Work conforms to the requirements of the Contract Documents.

.3 During the progress of the Work, a sufficient number of tests shall be performed by the Contractor to determine that Material, Product and installation meet the specified requirements.

.4 Minimum requirements regarding quality control are specified in various sections of the specifications, however, the Contractor shall perform as many inspections and tests as are necessary to ensure that the Work conforms to the requirements of the Contract Documents.

.5 Testing shall be in accordance with pertinent codes and regulations and with selected standards of the American Society for Testing Materials (ASTM) and Canadian Standards Association (CSA).

.6 Product testing, mill test and laboratory reports to demonstrate that Product and Material supplied by the Contractor meet the specifications are specified under various sections of the Contract Documents.

1.2 QUALITY CONTROL TESTING BY THE CONTRACTOR

.1 The Contractor shall retain the services of an independent testing agency under supervision of a registered professional Engineer, and pay for the cost of testing services for quality control including, but not limited to, the following:

- .1 Sieve analysis of sands and aggregates to be supplied to the Work.
- .2 Concrete Testing
- .3 Backfill, subgrade, base course and asphalt concrete paving
- .4 Any product testing that is required and is specified under various sections of the specifications

.2 The Contractor shall promptly process and distribute all required copies of test reports and test information and related instructions to all of his Subcontractors and Suppliers to ensure that all necessary retesting and replacement of construction can proceed without delay.

1.3 QUALITY ASSURANCE TESTING BY THE OWNER

.1 The Owner shall retain and pay for the services of an independent testing agency for testing for quality assurance, for the Owner's purposes.

.2 The Owner's testing agency and the Departmental Representative shall inspect and test Materials, Products and the Work for conformance with the test requirements of the Contract Documents; however, they do not undertake to check the quality of the Work on behalf of the Contractor nor to provide quality control.

.3 Inspections and test by the Owner's testing agency and by the Departmental Representative do not relieve the Contractor of his responsibility to supply Materials and Products and to perform the Work in accordance with the requirements of the Contract Documents.

.4 The Departmental Representative, at his discretion, may order or perform any additional inspections and test for purposes of his own or for purposes of the Owner.

.5 The Contractor shall coordinate with the Departmental Representative the scheduling of testing and inspection by the Owner's testing agencies or by the Departmental Representative, to enable testing to be done as necessary, without delay, and the Contractor shall notify the Departmental Representative sufficiently in advance of operations to allow for such inspection and test by the Departmental Representative's or the Owner's testing agency.

1.4 INSPECTION

.1 Allow Departmental Representative access to Work. If part of Work is in preparation at locations other than Place of Work, allow access to such Work whenever it is in progress.

.2 Give timely notice requesting inspection if Work is designated for special tests, inspections or approvals by Departmental Representative instructions, or law of Place of Work.

.3 If Contractor covers or permits to be covered Work that has been designated for special tests, inspections or approvals before such is made, uncover such Work, have inspections or tests satisfactorily completed and make good such Work.

.4 Departmental Representative will order part of Work to be examined if Work is suspected to be not in accordance with Contract Documents. If, upon examination such work is found not in accordance with Contract Documents, correct such Work and pay cost of examination and correction. If such Work is found in accordance with Contract Documents, Departmental Representative shall pay cost of examination and replacement.

1.5 ACCESS TO WORK

.1 Allow inspection/testing agencies access to Work, off site manufacturing and fabrication plants.

.2 Co-operate to provide reasonable facilities for such access.

1.6 PROCEDURES

.1 Notify appropriate agency and Departmental Representative in advance of requirement for tests, in order that attendance arrangements can be made.

.2 Submit samples and/or materials required for testing, as specifically requested in specifications. Submit with reasonable promptness and in orderly sequence to not cause delays in Work.

.3 Provide labour and facilities to obtain and handle samples and materials on site. Provide sufficient space to store and cure test samples.

1.7 REJECTED WORK

.1 Remove defective Work, whether result of poor workmanship, use of defective products or damage and whether incorporated in Work or not, which has been rejected by Departmental Representative as failing to conform to Contract Documents. Replace or re-execute in accordance with Contract Documents.

.2 Make good other Contractor's work damaged by such removals or replacements promptly.

.3 If in opinion of Departmental Representative it is not expedient to correct defective Work or Work not performed in accordance with Contract Documents, Owner will deduct from Contract Price difference in value between Work performed and that called for by Contract Documents, amount of which will be determined by Departmental Representative.

1.8 REPORTS

.1 Submit 1 copy of inspection and test reports to Departmental Representative.

Part 2 Products

2.1 NOT USED

.1 Not Used.

Part 3 Execution

3.1 NOT USED

.1 Not Used.

END OF SECTION

Part 1 General

1.1 ACTION AND INFORMATIONAL SUBMITTALS

.1 Provide submittals in accordance with Section 01 33 00 - Submittal Procedures.

1.2 INSTALLATION AND REMOVAL

.1 Provide temporary utilities controls in order to execute work expeditiously.

.2 Remove from site all such work after use.

1.3 DEWATERING

.1 Provide temporary drainage and pumping facilities to keep excavations and site free from standing water.

1.4 WATER SUPPLY

.1 Contractor will provide continuous supply of potable water to all homes, businesses and facilities disrupted by construction activities.

.2 Arrange for connection with appropriate utility company and pay costs for installation, maintenance and removal.

.3 Costs for temporary water services and considered incidental to the work and no separate or additional payment will be made.

1.5 SANITARY SEWER

.1 Contractor will provide continuous sanitary sewer to all homes, businesses and facilities disrupted by construction activities.

.2 Arrange for connection with appropriate utility company and pay costs for installation, maintenance and removal.

.3 Costs for temporary sanitary sewer services and considered incidental to the work and no separate or additional payment will be made.

Part 2 Products

2.1 NOT USED

.1 Not Used.

Part 3 Execution

3.1 TEMPORARY EROSION AND SEDIMENTATION CONTROL

.1 Provide temporary erosion and sedimentation control measures to prevent soil erosion and discharge of soil-bearing water runoff or airborne dust to adjacent properties and walkways.

.2 Inspect, repair, and maintain erosion and sedimentation control measures during construction until permanent vegetation has been established.

.3 Remove erosion and sedimentation controls and restore and stabilize areas disturbed during removal.

END OF SECTION

Part 1 General

1.1 ACTION AND INFORMATIONAL SUBMITTALS

.1 Provide submittals in accordance with Section 01 33 00 - Submittal Procedures.

1.2 INSTALLATION AND REMOVAL

.1 Prepare site plan indicating proposed location and dimensions of area to be fenced and used by Contractor, number of trailers to be used, avenues of ingress/egress to fenced area and details of fence installation.

.2 Identify areas which have to be gravelled to prevent tracking of mud.

.3 Indicate use of supplemental or other staging area.

.4 Provide construction facilities in order to execute work expeditiously.

.5 Remove from site all such work after use.

1.3 SITE STORAGE/LOADING

.1 Confine work and operations of employees by Contract Documents. Do not unreasonably encumber premises with products.

.2 Do not load or permit to load any part of Work with weight or force that will endanger Work.

1.4 CONSTRUCTION PARKING

.1 Parking will be permitted on site provided it does not disrupt performance of Work or normal operations of the National Park. Parking areas must be approved by Departmental Representative.

.2 Provide and maintain adequate access to project site.

1.5 SECURITY

.1 Provide and pay for responsible security personnel to guard site and contents of site after working hours and during holidays.

1.6 OFFICES

.1 If required by Contractor, provide office of sufficient size to accommodate required work activities of Contractor and all Sub-Contractors. Departmental Representative to approve location of trailer.

.2 Contractor is responsible to deal directly with utility companies for any utility hook ups required for site office.

.3 Provide marked and fully stocked first-aid case in a readily available location.

1.7 EQUIPMENT, TOOL AND MATERIALS STORAGE

.1 Provide and maintain, in clean and orderly condition, lockable weatherproof sheds for storage of tools, equipment and materials.

.2 Locate materials not required to be stored in weatherproof sheds on site in manner to cause least interference with work activities.

1.8 SANITARY FACILITIES

.1 Provide sanitary facilities for work force in accordance with governing regulations and ordinances.

.2 Post notices and take precautions as required by local health authorities. Keep area and premises in sanitary condition.

1.9 PROTECTION AND MAINTENANCE OF TRAFFIC

.1 Provide access and temporary relocated roads as necessary to maintain traffic.

.2 Maintain and protect traffic on affected roads during construction period except as otherwise specifically directed by Departmental Representative.

.3 Provide measures for protection and diversion of traffic, including provision of watch-persons and flag-persons, erection of barricades, placing of lights around and in front of equipment and work, and erection and maintenance of adequate warning, danger, and direction signs

.4 Protect travelling public from damage to person and property.

.5 Contractor's traffic on roads selected for hauling material to and from site to interfere as little as possible with public traffic.

.6 Verify adequacy of existing roads and allowable load limit on these roads. Contractor: responsible for repair of damage to roads caused by construction operations.

.7 Provide necessary lighting, signs, barricades, and distinctive markings for safe movement of traffic.

.8 Dust control: adequate to ensure safe operation at all times.

.9 Provide snow removal during period of Work.

1.10 CLEAN-UP

.1 Remove construction debris, waste materials, packaging material from work site daily.

.2 Clean dirt or mud tracked onto paved or surfaced roadways.

.3 Store materials resulting from demolition activities that are salvageable.

.4 Stack stored new or salvaged material not in construction facilities.

Part 2 Products

2.1 NOT USED

.1 Not Used.

Part 3 Execution

3.1 TEMPORARY EROSION AND SEDIMENTATION CONTROL

.1 Provide temporary erosion and sedimentation control measures to prevent soil erosion and discharge of soil-bearing water runoff or airborne dust to adjacent properties and walkways.

.2 Inspect, repair, and maintain erosion and sedimentation control measures during construction until permanent vegetation has been established.

.3 Remove erosion and sedimentation controls and restore and stabilize areas disturbed during removal.

END OF SECTION

Part 1 General

1.1 INSTALLATION AND REMOVAL

.1 Provide temporary controls in order to execute Work expeditiously.

.2 Remove from site all such work after use.

1.2 GUARD RAILS AND BARRICADES

.1 Provide secure, rigid guard rails and barricades around deep excavations.

1.3 ACCESS TO SITE

.1 Provide and maintain access roads, sidewalk crossings, ramps and construction runways as may be required for access to Work.

1.4 PUBLIC TRAFFIC FLOW

.1 Provide and maintain competent signal flag operators, traffic signals, barricades and flares, lights, or lanterns as required to perform Work and protect public.

1.5 FIRE ROUTES

.1 Maintain access to property including overhead clearances for use by emergency response vehicles.

1.6 PROTECTION FOR OFF-SITE AND PUBLIC PROPERTY

.1 Protect surrounding private and public property from damage during performance of Work.

.2 Be responsible for damage incurred.

Part 2 Products

2.1 NOT USED

.1 Not Used.

Part 3 Execution

3.1 NOT USED

.1 Not Used.

END OF SECTION

Part 1 General

1.1 REFERENCES

.1 If there is question as to whether products or systems are in conformance with applicable standards, Departmental Representative reserves right to have such products or systems tested to prove or disprove conformance.

.2 Cost for such testing will be born by Departmental Representative in event of conformance with Contract Documents or by Contractor in event of non-conformance.

1.2 QUALITY

.1 Products, materials, equipment and articles incorporated in Work shall be new, not damaged or defective, and of best quality for purpose intended. If requested, furnish evidence as to type, source and quality of products provided.

.2 Procurement policy is to acquire, in cost effective manner, items containing highest percentage of recycled and recovered materials practicable consistent with maintaining satisfactory levels of competition. Make reasonable efforts to use recycled and recovered materials and in otherwise utilizing recycled and recovered materials in execution of work.

.3 Defective products, whenever identified prior to completion of Work, will be rejected, regardless of previous inspections. Inspection does not relieve responsibility, but is precaution against oversight or error. Remove and replace defective products at own expense and be responsible for delays and expenses caused by rejection.

.4 Should disputes arise as to quality or fitness of products, decision rests strictly with Departmental Representative based upon requirements of Contract Documents.

.5 Unless otherwise indicated in specifications, maintain uniformity of manufacture for any particular or like item throughout building.

.6 Permanent labels, trademarks and nameplates on products are not acceptable in prominent locations, except where required for operating instructions, or when located in mechanical or electrical rooms.

1.3 AVAILABILITY

.1 Immediately upon signing Contract, review product delivery requirements and anticipate foreseeable supply delays for items. If delays in supply of products are foreseeable, notify Departmental Representative of such, in order that substitutions or other remedial action may be authorized in ample time to prevent delay in performance of Work.

.2 In event of failure to notify Departmental Representative at commencement of Work and should it subsequently appear that Work may be delayed for such reason, Departmental Representative reserves right to substitute more readily available products of similar character, at no increase in Contract Price or Contract Time.

1.4 STORAGE, HANDLING AND PROTECTION

.1 Handle and store products in manner to prevent damage, adulteration, deterioration and soiling and in accordance with manufacturer's instructions when applicable.

.2 Store packaged or bundled products in original and undamaged condition with manufacturer's seal and labels intact. Do not remove from packaging or bundling until required in Work.

.3 Store products subject to damage from weather in weatherproof enclosures.

.4 Remove and replace damaged products at own expense and to satisfaction of Departmental Representative.

1.5 TRANSPORTATION

.1 Pay costs of transportation of products required in performance of Work.

1.6 MANUFACTURER'S INSTRUCTIONS

.1 Unless otherwise indicated in specifications, install or erect products in accordance with manufacturer's instructions. Do not rely on labels or enclosures provided with products. Obtain written instructions directly from manufacturers.

.2 Notify Departmental Representative in writing, of conflicts between specifications and manufacturer's instructions, so that Departmental Representative will establish course of action.

.3 Improper installation or erection of products, due to failure in complying with these requirements, authorizes Departmental Representative to require removal and re-installation at no increase in Contract Price or Contract Time.

1.7 QUALITY OF WORK

.1 Ensure Quality of Work is of highest standard, executed by workers experienced and skilled in respective duties for which they are employed. Immediately notify Departmental Representative if required Work is such as to make it impractical to produce required results.

.2 Do not employ anyone unskilled in their required duties. Departmental Representative reserves right to require dismissal from site, workers deemed incompetent or careless.

.3 Decisions as to standard or fitness of Quality of Work in cases of dispute rest solely with Departmental Representative, whose decision is final.

1.8 CO-ORDINATION

.1 Ensure co-operation of workers in laying out Work. Maintain efficient and continuous supervision.

1.9 SETTING OUT OF WORK

.1 Departmental Representative will supply horizontal reference control points benchmark elevations only for this project.

.2 Contractor will set grades and layout work in detail from control points established by Departmental Representative.

.3 Contractor shall employ competent survey staff for complete detailed layout of work.

.4 Survey supervisor shall have experience in urban field survey work, including obtaining horizontal and vertical measurements, record keeping and calculation of quantities, generally associated with 3 to 5 years related experience.

.5 Contractor will be responsible for correction of any error associated with his layout.

.6 Contractor shall supply such devices as straight edges and templates required to facilitate Departmental Representative's inspection of work.

.7 Contractor shall supply stakes and other survey markers required for laying out the work.

.8 Cost of setting out of work will not be paid for directly but shall be considered incidental to contract unit prices tendered.

1.10 REMEDIAL WORK

.1 Perform remedial work required to repair or replace parts or portions of Work identified as defective or unacceptable. Co-ordinate adjacent affected Work as required.

.2 Perform remedial work by specialists familiar with materials affected. Perform in a manner to neither damage nor put at risk any portion of Work.

1.11 EXISTING UTILITIES

.1 When breaking into or connecting to existing services or utilities, execute Work at times directed by local governing authorities, with minimum of disturbance to Work, building occupants and pedestrian and vehicular traffic.

.2 Protect, relocate or maintain existing active services. When services are encountered, cap off in manner approved by authority having jurisdiction. Stake and record location of capped service.

Part 2 Products

2.1 NOT USED

.1 Not Used.

Part 3 Execution

3.1 NOT USED

.1 Not Used.

END OF SECTION

Part 1 General

1.1 PROJECT CLEANLINESS

.1 Maintain Work in tidy condition, free from accumulation of waste products and debris.

.2 Remove waste materials from site at daily regularly scheduled times or dispose of. Do not burn waste materials on site.

.3 Clear snow and ice as required. Pile snow in designated areas only.

.4 Make arrangements with and obtain permits from authorities having jurisdiction for disposal of waste and debris.

.5 Provide on-site containers for collection of waste materials and debris.

.6 Dispose of waste materials and debris outside of Waterton Lakes National Park.

1.2 FINAL CLEANING

.1 When Work is Substantially Performed remove surplus products, tools, construction machinery and equipment not required for performance of remaining Work.

.2 Remove waste products and debris, and leave Work clean and suitable for occupancy.

.3 Prior to final review remove surplus products, tools, construction machinery and equipment.

.4 Broom clean and wash exterior walks, steps and surfaces; rake clean other surfaces of grounds.

.5 Remove dirt and other disfiguration from exterior surfaces.

.6 Sweep and wash clean paved areas.

1.3 WASTE MANAGEMENT AND DISPOSAL

.1 Separate waste materials for reuse and recycling.

Part 2 Products

2.1 NOT USED

.1 Not Used.

Part 3 Execution

3.1 NOT USED

.1 Not Used.

END OF SECTION

Part 1 General

1.1 ADMINISTRATIVE REQUIREMENTS

.1 Acceptance of Work Procedures:

.1 Contractor's Inspection: Contractor: conduct inspection of Work, identify deficiencies and defects, and repair as required to conform to Contract Documents.

.1 Notify Departmental Representative in writing of satisfactory completion of Contractor's inspection and submit verification that corrections have been made.

.2 Request Departmental Representative's inspection.

.2 Departmental Representative's Inspection:

.1 Departmental Representative and Contractor to inspect Work and identify defects and deficiencies.

.2 Contractor to correct Work as directed.

.3 Completion Tasks: submit written certificates that tasks have been performed as follows:

.1 Work: completed and inspected for compliance with Contract Documents.

.2 Defects: corrected and deficiencies completed.

.3 Equipment and systems: tested, adjusted and fully operational.

.4 Certificates required by Utility companies: submitted.

.5 Operation of systems: demonstrated to Owner's personnel.

.6 Work: complete and ready for final inspection.

.4 Final Inspection:

.1 When completion tasks are done, request final inspection of Work by Departmental Representative, and Contractor.

.2 When Work incomplete according to Departmental Representative, complete outstanding items and request re-inspection.

.5 Declaration of Substantial Performance: when Departmental Representative considers deficiencies and defects corrected and requirements of Contract substantially performed, make application for Certificate of Substantial Performance.

.6 Commencement of Lien and Warranty Periods: date of Owner's acceptance of submitted declaration of Substantial Performance to be date for commencement for warranty period and commencement of lien period unless required otherwise by lien statute of Place of Work.

.7 Final Payment:

.1 When Departmental Representative considers final deficiencies and defects corrected and requirements of Contract met, make application for final payment.

.8 Payment of Holdback: after issuance of Certificate of Substantial Performance of Work, submit application for payment of holdback amount in accordance with contractual agreement.

Part 2 Products

2.1 NOT USED

.1 Not Used.

Part 3 Execution

3.1 NOT USED

.1 Not Used.

END OF SECTION

Part 1 General

1.1 ADMINISTRATIVE REQUIREMENTS

.1 Pre-warranty Meeting:

.1 Convene meeting one week prior to contract completion with Departmental Representative, to:

.1 Verify Project requirements.

.2 Review warranty requirements.

.2 Departmental Representative to establish communication procedures for:

.1 Notifying construction warranty defects.

.2 Determine priorities for type of defects.

.3 Determine reasonable response time.

.3 Contact information for bonded and licensed company for warranty work action: provide name, telephone number and address of company authorized for construction warranty work action.

.4 Ensure contact is located within local service area of warranted construction, is continuously available, and is responsive to inquiries for warranty work action.

1.2 ACTION AND INFORMATIONAL SUBMITTALS

.1 Provide submittals in accordance with Section 01 33 00 - Submittal Procedures.

.2 One week prior to Substantial Performance of the Work, submit to the Departmental Representative, two final copies of operating and maintenance manuals in English.

.3 Provide spare parts, maintenance materials and special tools of same quality and manufacture as products provided in Work.

.4 Provide evidence, if requested, for type, source and quality of products supplied.

1.3 FORMAT

.1 Organize data as instructional manual.

.2 Binders: vinyl, hard covered, 3 'D' ring, loose leaf [219 x 279] mm with spine and face pockets.

.3 When multiple binders are used correlate data into related consistent groupings.

.1 Identify contents of each binder on spine.

.4 Cover: identify each binder with type or printed title 'Project Record Documents'; list title of project and identify subject matter of contents.

.5 Arrange content under Section numbers and sequence of Table of Contents.

.6 Text: manufacturer's printed data, or typewritten data.

.7 Drawings: provide with reinforced punched binder tab.

1.4 AS -BUILT DOCUMENTS AND SAMPLES

.1 Maintain, at site for Departmental Representative one record copy of:

- .1 Contract Drawings.
- .2 Specifications.
- .3 Addenda.
- .4 Change Orders and other modifications to Contract.
- .5 Reviewed shop drawings, product data, and samples.
- .6 Field test records.
- .7 Inspection certificates.
- .8 Manufacturer's certificates.

.2 Store record documents and samples in field office apart from documents used for construction.

- .1 Provide files, racks, and secure storage.

.3 Label record documents and file in accordance with Section number listings in List of Contents of this Project Manual.

- .1 Label each document "PROJECT RECORD" in neat, large, printed letters.

.4 Maintain record documents in clean, dry and legible condition.

- .1 Do not use record documents for construction purposes.

.5 Keep record documents and samples available for inspection by Departmental Representative.

1.5 RECORDING INFORMATION ON PROJECT RECORD DOCUMENTS

.1 Record information on set of drawings, provided by Departmental Representative.

.2 Use felt tip marking pens, maintaining separate colours for each major system, for recording information.

.3 Record information concurrently with construction progress.

- .1 Do not conceal Work until required information is recorded.

.4 Contract Drawings and shop drawings: mark each item to record actual construction, including:

- .1 Measured horizontal and vertical locations of underground utilities and appurtenances, referenced to permanent surface improvements.
- .2 Measured locations of internal utilities and appurtenances, referenced to visible and accessible features of construction.
- .3 Field changes of dimension and detail.
- .4 Changes made by change orders.
- .5 Details not on original Contract Drawings.
- .6 References to related shop drawings and modifications.

.5 Specifications: mark each item to record actual construction, including:

.1 Manufacturer, trade name, and catalogue number of each product actually installed, particularly optional items and substitute items.

.2 Changes made by Addenda and change orders.

.6 Other Documents: maintain manufacturer's certifications, inspection certifications, field test records, required by individual specifications sections.

.7 Provide digital photos, if requested, for site records.

Part 2 Products

2.1 NOT USED

.1 Not Used.

Part 3 Execution

3.1 NOT USED

.1 Not Used.

END OF SECTION

Part 1 Not Used

1.1 NOT USED

Part 2 Products

2.1 EQUIPMENT

.1 Leave machinery running only while in use, except where extreme temperatures prohibit shutting machinery down.

Part 3 Execution

3.1 PREPARATION

.1 Inspect site with Departmental Representative and verify extent and location of items designated for removal, disposal, alternative disposal, recycling, salvage and items to remain.

.2 Locate and protect utilities. Preserve active utilities traversing site in operating condition.

.3 Notify and obtain approval of utility companies before starting demolition.

.4 Disconnect Services.

.1 Sewer and Water Lines.

.2 Other Underground Services

3.2 REMOVAL OF HAZARDOUS WASTES

.1 Remove contaminated or dangerous materials defined by authorities having jurisdiction, relating to environmental protection, from site and dispose of in safe manner to minimize danger at site or during disposal.

3.3 REMOVAL OPERATIONS

.1 Remove items as indicated.

.2 Do not disturb items designated to remain in place.

.3 Removal of pavements, curbs and gutters:

.1 Square up adjacent surfaces to remain in place by saw cutting or other method approved by Departmental Representative.

.2 Protect adjacent joints and load transfer devices.

.3 Protect underlying and adjacent granular materials.

.4 Prevent contamination with base course aggregates, when removing asphalt pavement for subsequent incorporation into hot mix asphalt concrete paving,

.5 Excavate at least 300 mm below pipe invert, when removing pipes under existing or future pavement area.

.6 Remove designated trees during demolition.

.1 Obtain written approval of Departmental Representative prior to removal of trees not designated.

.7 Stockpile topsoil for final grading and landscaping:

.1 Stockpile location at Upper Compound approximately 3.5kms from site

.2 Provide erosion control and seeding if not immediately used.

.8 Disposal of Material:

.1 Dispose of materials not designated for salvage to approved disposal facility outside of Waterton Park or reuse on site as instructed by Departmental Representative.

.9 Backfill:

.1 Backfill in areas as indicated and in accordance with Section 31 23 33.01 - Excavating, Trenching and Backfilling.

3.4 STOCKPILING

.1 Label stockpiles, indicating material type and quantity.

.2 Designate appropriate security resources/measures to prevent vandalism, damage and theft.

.3 Locate stockpiled materials convenient for use in new construction to eliminate double handling wherever possible.

.4 Stockpile materials designated for alternate disposal in location which facilitates removal from site and examination by potential end markets, and which does not impede disassembly, processing, or hauling procedures.

3.5 RESTORATION

.1 Restore areas and existing works outside areas of demolition to match condition of adjacent, undisturbed areas.

.2 Use soil treatments and procedures which are not harmful to health, are not injurious to plants, and do not endanger wildlife, adjacent water courses or ground water.

3.6 CLEANING

.1 Progress Cleaning: clean in accordance with Section 01 74 11 - Cleaning.

.1 Leave Work area clean at end of each day.

.2 Remove debris, trim surfaces and leave work site clean, upon completion of Work

.3 Use cleaning solutions and procedures which are not harmful to health, are not injurious to plants, and do not endanger wildlife, adjacent water courses or ground water.

.2 Final Cleaning: upon completion remove surplus materials, rubbish, tools and equipment in accordance with Section 01 74 11 - Cleaning.

3.7 PROTECTION

.1 Repair damage to adjacent materials or property caused by selective site demolition.

END OF SECTION

Part 1 General

.1 Not Used

Part 2 Products

2.1 EQUIPMENT

.1 Use cold milling, planning or grinding equipment with automatic grade controls capable of operating from stringline, and capable of removing part of pavement surface to depths or grades indicated.

Part 3 Execution

3.1 PREPARATION

.1 Temporary Erosion and Sedimentation Control:

.1 Provide temporary erosion and sedimentation control measures to prevent soil erosion and discharge of soil-bearing water runoff or airborne dust to adjacent properties and walkways, according to requirements of authorities having jurisdiction.

.2 Inspect, repair, and maintain erosion and sedimentation control measures during construction until permanent vegetation has been established.

.3 Remove erosion and sedimentation controls and restore and stabilize areas disturbed during removal.

.2 Prior to beginning removal operation, inspect and verify with Departmental Representative areas, depths and lines of asphalt pavement to be removed.

.3 Protection: protect existing pavement not designated for removal, light units and structures from damage. In event of damage, immediately replace or make repairs to approval of Departmental Representative at no additional cost.

3.2 REMOVAL

.1 Remove existing asphalt pavement to lines and grades as indicated.

.2 Use equipment and methods of removal and hauling which do not damage or disturb underlying pavement.

.3 Prevent contamination of removed asphalt pavement by topsoil, underlying gravel or other materials.

.4 Suppress dust generated by removal process.

.5 Asphalt cores reveal the following average asphalt thicknesses:

.1 Bertha Lane

.1 150 mm

.2 Clematis Avenue
- .1 Range: 56 mm to 83 mm
- .2 70 mm

.3 Harebell Road
- .1 90 mm

.4 Vimy Avenue
- .1 Range: 50 mm to 90 mm
- .2 Average: 70 mm

.5 Cameron Falls Drive
- .1 Range: 70 mm to 120 mm
- .2 95 mm

.6 Alley 2 and Alley 6
- .1 Estimated: 100 mm

.7 All removed asphalt shall be stockpiled at Upper Compound (approx. 3.5km from site)

3.3 FINISH TOLERANCES

.1 Finished surfaces in areas where asphalt pavement has been removed to be within +/-5 mm of grade specified but not uniformly high or low.

3.4 CLEANING

.1 Progress Cleaning: clean in accordance with Section 01 74 11 - Cleaning.

- .1 Leave Work area clean at end of each day.

.2 Sweep remaining asphalt pavement surfaces clean of debris resulting from removal operations using rotary power brooms and hand brooming as required.

END OF SECTION

Part 1 General

1.1 ACTION AND INFORMATIONAL SUBMITTALS

.1 Provide submittals in accordance with Section 01 33 00 - Submittal Procedures.

.2 Shop Drawings:

.1 Submit placing drawings prepared in accordance with plans to clearly show size, shape, location and necessary details of reinforcing.

.3 Provide testing results for review by Departmental Representative and do not proceed without written approval when deviations from mix design or parameters are found.

.4 Concrete hauling time: provide for review by Departmental Representative deviations exceeding maximum allowable time of 120 minutes for concrete to be delivered to site of Work and discharged after batching.

1.2 QUALITY ASSURANCE

.1 Provide to Departmental Representative, 2 weeks minimum prior to starting concrete work, valid and recognized certificate from plant delivering concrete.

.1 Quality Control Plan: provide written report to Departmental Representative verifying compliance that concrete in place meets performance requirements.

1.3 DELIVERY, STORAGE AND HANDLING

.1 Delivery and Acceptance Requirements:

.1 Concrete hauling time: deliver to site of Work and discharged within 120 minutes maximum after batching.

.1 Do not modify maximum time limit without receipt of prior written agreement from Departmental Representative and concrete producer as described in CSA A23.1/A23.2.

.2 Deviations to be submitted for review by the Departmental Representative.

.2 Concrete delivery: ensure continuous concrete delivery from plant meets CSA A23.1/A23.2.

Part 2 Products

2.1 PERFORMANCE CRITERIA

.1 Quality Control Plan: ensure concrete supplier meets specifications performance criteria of concrete as established by Departmental Representative and provide verification of compliance as described in PART 1 - QUALITY ASSURANCE.

2.2 MATERIALS

.1 Cement: to CSA A3001, Type 10.

.2 Water: to CSA A23.1/A23.2.

.3 Reinforcing bars: to CAN/CSA-G30.18, Grade 400.

.4 Welded steel wire fabric: to ASTM A185.

.5 Premoulded joint filler:

.1 Bituminous impregnated fibreboard: to ASTM D1751.

.6 Joint sealer/filler: grey to CAN/CGSB-19.24, Type 1, Class B.

.7 Sealer: boiled linseed oil to ASTM D260, mixed with mineral spirits 1:1.

.8 Other concrete materials: to CSA A23.1/A23.2.

2.3 MIXES

.1 Proportion concrete in accordance with CAN/CSA-A23.1.

.2 Minimum 28 day compressive strengths and exposure classifications:

.1 Pavements, walks, curbs and exposed site concrete: 32 MPa; C-2.

.2 All other concrete: 25 MPa; C-4.

.3 Nominal size of coarse aggregate: Clause 14 of CAN/CSA-A23.1.

.4 Slump: to Table 6 of CAN/CSA-A23.1.

.5 Air content: all concrete to contain purposely entrained air in accordance with Table 10 of CAN/CSA-A23.1.

.6 Admixtures: to Clause 6 of CAN/CSA-A23.1.

Part 3 Execution

3.1 PREPARATION

.1 Provide Departmental Representative 24 hours notice before each concrete pour.

.2 During concreting operations:

.1 Development of cold joints not allowed.

.2 Ensure concrete delivery and handling facilitates placing with minimum of rehandling, and without damage to existing structure or Work.

.3 Protect previous Work from staining.

.4 Clean and remove stains prior to application of concrete finishes.

3.2 INSTALLATION/APPLICATION

.1 Do cast-in-place concrete work in accordance with CSA A23.1/A23.2.

.2 Sleeves and inserts:

.1 Cast in sleeves, ties, slots, anchors, reinforcement, frames, conduit, bolts, waterstops, joint fillers and other inserts required to be built-in.

.2 Sleeves and openings greater than 100 mm x 100 mm not indicated, must be reviewed by Departmental Representative.

3.3 FINISHES

.1 Formed surfaces exposed to view: sack rubbed finish in accordance with CSA A23.1/A23.2.

.2 Pavements, walks, curbs and exposed site concrete:

.1 Screed to plane surfaces and use wood floats.

.2 Provide round edges and joint spacings using standard tools.

.3 Trowel smooth to provide lightly brushed non-slip finish.

3.4 CONTROL JOINTS

.1 Cut control joints in slabs on grade at locations indicated, to CSA A23.1/A23.2 and install specified joint sealer/filler.

3.5 EXPANSION AND ISOLATION JOINTS

.1 Install premoulded joint filler in expansion and isolation joints full depth of slab flush with finished surface to CSA A23.1/A23.2.

3.6 CURING

.1 Use curing compounds compatible with applied finish on concrete surfaces free of bonding agents and to CSA A23.1/A23.2.

3.7 SEALING APPLICATION

.1 After curing is complete, apply two even coats of linseed oil mixture to clean dry surfaces, each at 8 m^2/L. Allow first coat to dry before applying second coat. Apply poly-siloxane resin blend sealer at 4 m^2/L.

3.8 SITE TOLERANCES

.1 Concrete floor slab finishing tolerance to CSA A23.1/A23.2.

3.9 FIELD QUALITY CONTROL

.1 Concrete testing: to CSA A23.1/A23.2 by designated testing laboratory.

3.10 CLEANING

.1 Clean in accordance with Section 01 74 11 - Cleaning.

.2 Use trigger operated spray nozzles for water hoses.

.3 Designate cleaning area for tools to limit water use and runoff.

.4 Cleaning of concrete equipment to be done in accordance with Section 01 35 43 Environmental Procedures.

END OF SECTION

Part 1 General

1.1 ACTION AND INFORMATIONAL SUBMITTALS

.1 Submit in accordance with Section 01 33 00 - Submittal Procedures.

.2 Product Data:

.1 Submit manufacturer's instructions, printed product literature and data sheets for aggregate materials and include product characteristics, performance criteria, physical size, finish and limitations

.3 Samples:

.1 Submit 1 sample.

.2 Allow continual sampling by Departmental Representative during production.

.3 Provide Departmental Representative with access to source and processed material for sampling.

.4 Supply new or clean sample bags or containers according appropriate to aggregate materials.

.5 Pay cost of sampling and testing of aggregates which fail to meet specified requirements.

Part 2 Products

2.1 MATERIALS

.1 Aggregate quality: sound, hard, durable material free from soft, thin, elongated or laminated particles, organic material, clay lumps or minerals, free from adherent coatings and injurious amounts of disintegrated pieces or other deleterious substances.

.2 Flat and elongated particles of coarse aggregate: to ASTM D 4791.

.1 Greatest dimension to exceed 5 times least dimension.

.3 Fine aggregates satisfying requirements of applicable section to be one, or blend of following:

.1 Screenings produced in crushing of quarried rock, boulders, gravel or slag.

.2 Reclaimed asphalt pavement.

.3 Reclaimed concrete material.

.4 Coarse aggregates satisfying requirements of applicable section to be one of or blend of following:

.1 Crushed rock.

.2 Crushed gravel composed of naturally formed particles of stone.

.3 Reclaimed asphalt pavement.

.5 All utility pipe bedding to be 25 mm minus washed drain rock.

Sieve Size	Percent Passing by Weight
25 000	100
16 000	90-100
10 000	45-75
5 000	0-15
1 250	0-5

.6 Base Course Aggregate shall meet the following sizes:

Sieve Size	Percent Passing by Weight
25 000	100
20 000	82-97
16 000	70-94
10 000	52-79
5 000	35-64
1 250	18-43
630	12-34
315	8-26
160	5-18
80	2-10

2.2 SOURCE QUALITY CONTROL

.1 Inform Departmental Representative of proposed source of aggregates and provide access for sampling 2 weeks minimum before starting production.

.2 If materials from proposed source do not meet, or cannot reasonably be processed to meet, specified requirements, locate alternative source.

.3 Advise Departmental Representative 2 weeks minimum in advance of proposed change of material source.

.4 Acceptance of material at source does not preclude future rejection if it fails to conform to requirements specified, lacks uniformity, or if its field performance is found to be unsatisfactory.

Part 3 Execution

3.1 PREPARATION

.1 Processing:

.1 Process aggregate uniformly using methods that prevent contamination, segregation and degradation.

.2 Blend aggregates, as required, including reclaimed materials that meet physical requirements of specification is permitted in order to satisfy gradation requirements for material and, percentage of crushed particles, or particle shapes specified.

.1 Use methods and equipment approved in writing by Departmental Representative.

.2 When operating in stratified deposits use excavation equipment and methods that produce uniform, homogeneous aggregate gradation.

.3 Where necessary, screen, crush, wash, classify and process aggregates with suitable equipment to meet requirements.

.1 Use only equipment approved in writing by Departmental Representative.

.4 Stockpiling:

.1 Stockpile aggregates on site at Upper Compound (approx. 3.5 kms from site)

.2 Stockpile aggregates in sufficient quantities to meet project schedules.

.3 Stockpiling sites to be level, well drained, and of adequate bearing capacity and stability to support stockpiled materials and handling equipment.

.4 Except where stockpiled on acceptably stabilized areas, provide compacted sand base not less than 300 mm in depth to prevent contamination of aggregate. Stockpile aggregates on ground but do not incorporate bottom 300 mm of pile into Work.

.5 Separate different aggregates by strong, full depth bulkheads, or stockpile far enough apart to prevent intermixing.

.6 Do not use intermixed or contaminated materials. Remove and dispose of rejected materials within 48 hours of rejection.

.7 Stockpile materials in uniform layers of thickness as follows:

.1 Maximum 1.5 m for coarse aggregate and base course materials.

.2 Maximum 1.5 m for fine aggregate and sub-base materials.

.3 Maximum 1.5 m for other materials.

.8 Uniformly spot-dump aggregates delivered to stockpile in trucks and build up stockpile as specified.

.9 Do not cone piles or spill material over edges of piles.

.10 Do not use conveying stackers.

.11 During winter operations, prevent ice and snow from becoming mixed into stockpile or in material being removed from stockpile.

3.2 CLEANING

.1 Progress Cleaning: clean in accordance with Section 01 74 11 – Cleaning.

.1 Leave Work area clean at end of each day.

.2 Final Cleaning: upon completion remove surplus materials, rubbish, tools and equipment in accordance with Section 01 74 11 - Cleaning.

.3 Leave aggregate stockpile site in tidy, well drained condition, free of standing surface water.

.4 Leave any unused aggregates in neat compact stockpiles

END OF SECTION

Part 1 General

1.1 MEASUREMENT PROCEDURES

.1 Work performed under this section will be incidental to work involved in other sections.

.2 Shoring, bracing, cofferdams, underpinning and de-watering of excavation will not be measured separately for payment.

1.2 DEFINITIONS

.1 Excavation classes: two classes of excavation will be recognized; common excavation and rock excavation.

.1 Rock : solid material in excess of 1.00 m^3 and which cannot be removed by means of heavy duty mechanical excavating equipment with 0.95 to 1.15 m^3 bucket. Frozen material not classified as rock.

.2 Common excavation: excavation of materials of whatever nature, which are not included under definitions of rock excavation.

.2 Unclassified excavation: excavation of deposits of whatever character encountered in Work.

.3 Topsoil:

.1 Material capable of supporting good vegetative growth and suitable for use in top dressing, landscaping and seeding.

.2 Material reasonably free from subsoil, clay lumps, brush, objectionable weeds, and other litter, and free from cobbles, stumps, roots, and other objectionable material larger than 25 millimeters in any dimension.

.4 Waste material: excavated material unsuitable for use in Work or surplus to requirements.

.5 Borrow material: material obtained from locations outside area to be graded, and required for construction of fill areas or for other portions of Work.

.6 Recycled fill material: material, considered inert, obtained from alternate sources and engineered to meet requirements of fill areas.

.7 Unsuitable materials:

.1 Weak, chemically unstable, and compressible materials.

.2 Frost susceptible materials:

.1 Fine grained soils with plasticity index less than 10 when tested to ASTM D 4318, and gradation within limits specified when tested to ASTM D 422 and ASTM C 136: Sieve sizes to CAN/CGSB-8.1 CAN/CGSB-8.2.

.2 Table:

Sieve Designation	% Passing
2.00 mm	100
0.10 mm	45 - 100
0.02 mm	10 - 80
0.005 mm	0 - 45

.3 Coarse grained soils containing more than 20% by mass passing 0.075 mm sieve.

.8 Unshrinkable fill: very weak mixture of cement, concrete aggregates and water that resists settlement when placed in utility trenches, and capable of being readily excavated.

1.3 ACTION AND INFORMATIONAL SUBMITTALS

.1 Make submittals in accordance with Section 01 33 00 - Submittal Procedures.

1.4 EXISTING CONDITIONS

.1 Buried services:

.1 Before commencing work verify location of buried services on and adjacent to site.

.2 Arrange with appropriate authority for relocation of buried services that interfere with execution of work: pay costs of relocating services.

.3 Size, depth and location of existing utilities and structures as indicated are for guidance only. Completeness and accuracy are not guaranteed.

.4 Prior to beginning excavation Work, notify applicable Departmental Representative, establish location and state of use of buried utilities and structures. Authorities having jurisdiction to clearly mark such locations to prevent disturbance during Work.

.5 Confirm locations of buried utilities by careful soil hydrovac methods.

.6 Maintain and protect from damage, water, sewer, gas, electric, telephone and other utilities and structures encountered.

.7 Where utility lines or structures exist in area of excavation, obtain direction of Departmental Representative before removing or re-routing. Costs for such Work to be incidental.

.8 Record location of maintained, re-routed and abandoned underground lines.

.9 Confirm locations of recent excavations adjacent to area of excavation.

.2 Existing buildings and surface features:

.1 Conduct, with Departmental Representative condition survey of existing buildings, trees and other plants, lawns, fencing, service poles, wires, rail tracks, pavement, survey bench marks and monuments which may be affected by Work.

.2 Protect existing buildings and surface features from damage while Work is in progress. In event of damage, immediately make repair.

Part 2 Products

2.1 MATERIALS

.1 Type 1 and Type 2 fill: properties to Section 31 05 16 - Aggregate Materials and the following requirements:

.1 Crushed, pit run or screened stone, gravel or sand.

.2 Gradations to be within limits specified when tested to ASTM C 136 and ASTM C 117. Sieve sizes to CAN/CGSB-8.1.

Sieve Designation	%Passing Type1	Type2
75 mm	-	100
50 mm	-	-
37.5 mm	-	-
25 mm	100	-
19 mm	75-100	-
12.5 mm	-	-
9.5 mm	50-100	-
4.75 mm	30-70	22-85
2.00 mm	20-45	-
0.425 mm	10-25	5-30
0.180 mm	-	-
0.075 mm	3-8	0-10

.2 Type 3 fill: selected material from excavation or other sources, approved by Departmental Representative for use intended, unfrozen and free from rocks larger than 200mm, cinders, ashes, sods, refuse or other deleterious materials.

.3 All utility pipe bedding to be 25 mm minus washed drain rock.

Sieve Size	Percent Passing by Weight
25 000	100
16 000	90-100
10 000	45-75
5 000	0-15
1 250	0-5

Part 3 Execution

3.1 TEMPORARY EROSION AND SEDIMENTATION CONTROL

.1 Provide temporary erosion and sedimentation control measures to prevent soil erosion and discharge of soil-bearing water runoff or airborne dust to adjacent properties and walkways, according to requirements of authorities having jurisdiction.

.2 Inspect, repair, and maintain erosion and sedimentation control measures during construction until permanent vegetation has been established.

.3 Remove erosion and sedimentation controls and restore and stabilize areas disturbed during removal.

3.2 SITE PREPARATION

.1 Remove obstructions, ice and snow, from surfaces to be excavated within limits indicated.

.2 Saw cut pavement or sidewalk neatly along limits of proposed excavation in order that surface may break evenly and cleanly in accordance with Section 02 41 13 - Selective Site Demolition.

3.3 PREPARATION/ PROTECTION

.1 Protect existing features in accordance with Section 01 56 00 - Temporary Barriers and Enclosures and applicable local regulations.

.2 Keep excavations clean, free of standing water, and loose soil.

.3 Where soil is subject to significant volume change due to change in moisture content, cover and protect to Departmental Representative approval.

.4 Protect natural and man-made features required to remain undisturbed. Unless otherwise indicated or located in an area to be occupied by new construction, protect existing trees from damage.

.5 Protect buried services that are required to remain undisturbed. All utility lines encountered during excavation must be backfilled in accordance with utility backfill trench detail as shown in the drawings.

3.4 STOCKPILING

.1 Stockpile fill materials in areas designated by Departmental Representative.

.1 Stockpile granular materials in manner to prevent segregation.

.2 Protect fill materials from contamination.

.3 Implement sufficient erosion and sediment control measures to prevent sediment release off construction boundaries and into water bodies.

3.5 COFFERDAMS, SHORING, BRACING AND UNDERPINNING

.1 Designs of these temporary works need to be completed by and approved by a Professional Engineer.

.2 Maintain sides and slopes of excavations in safe condition by appropriate methods and in accordance with Section 01 35 29.06 - Health and Safety Requirements.

.1 Where conditions are unstable, Departmental Representative to verify and advise methods.

.3 Construct temporary Works to depths, heights and locations as approved by Departmental Representative.

.4 During backfill operation:

.1 Unless otherwise indicated or directed by Departmental Representative, remove sheeting and shoring from excavations.

.2 Do not remove bracing until backfilling has reached respective levels of such bracing.

.3 Pull sheeting in increments that will ensure compacted backfill is maintained at elevation at least 500 mm above toe of sheeting.

.5 When sheeting is required to remain in place, cut off tops at elevations as indicated.

.6 Upon completion of substructure construction:

.1 Remove cofferdams, shoring and bracing.

.2 Remove excess materials from site and restore watercourses as indicated by Departmental Representative.

3.6 DEWATERING AND HEAVE PREVENTION

.1 Keep excavations free of water while Work is in progress.

.2 Provide for Departmental Representative's approval details of proposed dewatering or heave prevention methods, including dikes, well points, and sheet pile cut-offs.

.3 Avoid excavation below groundwater table if quick condition or heave is likely to occur.

.1 Prevent piping or bottom heave of excavations by groundwater lowering, sheet pile cut-offs, or other means.

.4 Protect open excavations against flooding and damage due to surface run-off.

.5 Dispose of water in accordance with Section 01 35 43 - Environmental Procedures to approved areas and in a manner not detrimental to public and private property, or portion of Work completed or under construction.

.1 Provide and maintain temporary drainage ditches and other diversions outside of excavation limits.

3.7 EXCAVATION

.1 Advise Departmental Representative at least 7 days in advance of excavation operations for initial cross sections to be taken.

.2 Excavate to lines, grades, elevations and dimensions as shown on drawings.

.3 Remove concrete, asphalt, walks and other obstructions encountered during excavation in accordance with Section 02 41 13 - Selective Site Demolition.

.4 Excavation must not interfere with bearing capacity of adjacent foundations.

.5 For trench excavation, unless otherwise authorized by Departmental Representative in writing, do not excavate more than 30 m of trench in advance of installation operations and do not leave open more than 15 m at end of day's operation.

.6 Keep excavated and stockpiled materials safe distance away from edge of trench.

.7 Restrict vehicle operations directly adjacent to open trenches.

.8 Dispose of surplus and unsuitable excavated material outside of Waterton Lakes National Park.

.9 Do not obstruct flow of surface drainage or natural watercourses.

.10 Earth bottoms of excavations to be undisturbed soil, level, free from loose, soft or organic matter.

.11 Notify Departmental Representative when bottom of excavation is reached.

.12 Obtain Departmental Representative approval of completed excavation.

.13 Remove unsuitable material from trench bottom including those that extend below required elevations to extent and depth.

.14 Hand trim, make firm and remove loose material and debris from excavations.

.1 Where material at bottom of excavation is disturbed, compact foundation soil to density at least equal to undisturbed soil.

.15 Rocks $0.6m^3$ up to $1m^3$ to be salvaged and stockpiled at Upper Compound (approx.. 3.5km from site.

3.8 FILL TYPES AND COMPACTION

.1 Use types of fill as indicated or specified below.

.1 Under road pavement, parking areas, sidewalk and other graveled areas, use Type 3 fill material for backfill, compact to 98% of maximum dry density to ASTM D698.

.2 Under grass and other areas not subject to vehicular traffic, use Type 3 fill for backfill. Compact to 98% of maximum dry density to ASTM D698.

3.9 BEDDING AND SURROUND OF UNDERGROUND SERVICES

.1 Place and compact granular material for bedding and surround of underground services as indicated and as specified in Section 33 11 16 - Site Water Utility Distribution Piping and Section 33 31 13 - Public Sanitary Utility Sewerage Piping.

.2 Place bedding and surround material in unfrozen condition.

3.10 BACKFILLING

.1 Do not proceed with backfilling operations until completion of following:

.1 Departmental Representative has inspected and approved installations.

.2 Areas to be backfilled to be free from debris, snow, ice, water and frozen ground.

.3 Do not use backfill material which is frozen or contains ice, snow or debris.

.4 Place backfill material in uniform layers not exceeding 150 mm compacted thickness up to grades indicated. Compact each layer before placing succeeding layer.

.5 Backfilling around installations:

.1 Place bedding and surround material as specified elsewhere.

.2 Do not backfill around or over cast-in-place concrete within 24 hours after placing of concrete.

.3 Place layers simultaneously on both sides of installed Work to equalize loading.

.4 Backfill trenches with Type 3 material.

3.11 RESTORATION

.1 Upon completion of Work, remove waste materials and debris, trim slopes, and correct defects.

.2 Reinstate lawns to elevation which existed before excavation.

.3 Reinstate pavements and sidewalks disturbed by excavation to thickness, structure and elevation which existed before excavation.

.4 Clean and reinstate areas affected by Work.

.5 Protect newly graded areas from traffic and erosion and maintain free of trash or debris.

END OF SECTION

Part 1 General

1.1 ACTION AND INFORMATIONAL SUBMITTALS

.1 Make submittals in accordance with Section 01 33 00 - Submittal Procedures.

Part 2 Products

2.1 NOT USED

Part 3 Execution

3.1 RESERVATION OF MATERIAL

.1 Whenever gravel, sand topsoil, or any other material suitable for special use is encountered, it shall be deemed to be the property of the Waterton National Park and shall be stockpiled at Upper Compound (approx. 3.5km from site)

.2 Where layers of gravel or gravely mixtures are encountered, suitable materials shall be excavated separately from other excavation and shall be stockpiled at Upper Compound (approx. 3.5km from site) or incorporated into the work as base material.

3.2 DISPOSAL OF MATERIAL

.1 Excavated materials shall be utilized as fill if required on any portion of the work being carried out under this Contract. Where excavated material is specifically directed to be used as fill or for any other purpose, the Contractor will be required to haul the material as part of his excavations for the work to an approved disposal site outside of Waterton Park. There is no separate payment for this work and is considered included in the subgrade preparation unit payment.

.2 Sufficient material will be kept on site for backfill of curbs and boulevard areas. Overhaul will not be paid to haul back to an area which contained a surplus of excavated soil suitable for this purpose.

.3 The excavated material shall be hauled and dumped at the fill area as part of the unit of excavation. Any materials required to be used in boulevard areas or for rounding at the base of cuts or fills shall be placed, spread in lifts not exceeding 150 mm, and fine graded as part of the unit of excavation. No special compaction will be required.

.4 All materials deemed to be in excess of requirements or unsuitable shall be disposed of appropriately by the Contractor outside of Waterton National Park.

3.3 FINISHING AND COMPACTING SUBGRADE

.1 The excavated sections shall be ploughed to a depth of at least 150 mm below the surface of the subgrade and replaced and compacted to a minimum of ninety eight percent (98%) of Standard Proctor Density. The cut shall be left sufficiently high so that the surface after compaction can be trimmed to the final grade, and any loose material resulting from

this operation removed. All depressions caused by the finishing rollers shall be removed during the final blading operation.

3.4 EXCAVATION BELOW GRADE

.1 Unsuitable Materials: When topsoil, muskeg, or other soft areas are encountered below the finished subgrade, which in the opinion of the Departmental Representative require removal, the area shall be undercut and the unsuitable material excavated, loaded and disposed of outside of Waterton National Park. These materials shall be replaced with suitable common excavation.

.2 Placing Fill: Fill material shall be placed in successive horizontal layers not exceeding 150 mm. Suitable spreading and leveling equipment shall be kept in continuous operation at all times.

.3 Compaction: The compaction will be sufficient to obtain a minimum density of 98% of maximum dry density in accordance with ASTM D698 (Method C or D), unless otherwise stated in the specifications. Where it is necessary to add or remove moisture from the soil to obtain the compaction, it shall be done as part of the requirements of this section.

.4 Finishing: The fill section shall be compacted to a level slightly above the finished grade, and cut back to the final elevation. All loose material shall be removed from the surface of the subgrade.

3.5 THE FOLLOWING TESTS SHAL BE EMPLOYED TO ESTABLISH COMPACTION PROCEDURES:

.1 The maximum dry density of the soil shall be determined by ASTM procedure D-698 (Moisture Density Relationships of soils), to be determined for each soil type. The optimum moisture content of the soil shall be determined from the laboratory compaction curve established.

.2 The field density of soils shall be determined by ASTM D-2922 – Determining density of soil and soil aggregate in place by nuclear methods (shallow depth).

3.6 NORMAL COMPACTED THICKNESSES OF LIFTS

Equipment Type	Cohesive Soils	Non-Cohesive Soils
Vibratory Sheepsfoot Packer	300 mm	300 mm
Sheepsfoot Packer	200 mm	--
Pneumatic Tire	200 mm	200 mm
Vibratory Roller	150 mm	300 mm
Pneumatic Tamper (contact area < 130 sq cm)	100 mm	100 mm
Pneumatic Tamper	100 mm	100 mm
(contact area > 130 sq cm)	100 mm	100 mm
Mechanical Tamper (diesel or gas – jumping jack)	100 mm	200 mm

.1 Thickness of lifts for other equipment shall be determined by laboratory testing procedures during the construction process. The Departmental Representative may grant approval in writing to alter lift thicknesses upon evidence of satisfactory compaction at other lift thicknesses.

END OF SECTION

Part 1 General

1.1 ACTION AND INFORMATIONAL SUBMITTALS

.1 Make submittals in accordance with Section 01 33 00 - Submittal Procedures.

Part 2 Products

2.1 SAMPLES

.1 At least two (2) weeks prior to commencing work, provide the Departmental Representative of proposed source of aggregates and provide materials certification of properties below.

2.2 MATERIALS CERTIFICATION

.1 Aggregates: At least two (2) weeks prior to commencing work provide:

.1 Test data reports representing granular base and/or granular sub-base processed into stockpile. Submit one (1) complete aggregate gradation analysis report for every 1,000 tonnes of each material required for the project or one complete analysis for each production day when production is less than 1,000 tonnes. Include percentage of crushed coarse aggregate particles in granular base reports.

.2 Certification that the physical properties of the aggregates meet the requirements of this section.

.3 Reports and certification shall be provided by an independent testing consultant under the signature and professional seal of a qualified materials engineer.

.2 At least two (2) weeks prior to contemplated change in source of aggregates, provide written notification to the Departmental Representative and provide new materials certification in accordance with the requirements of this section.

2.3 GRANULAR BASE

.1 Crushed stone or gravel consisting of hard, durable, angular particles, free from clay lumps, cementation, organic material, frozen material and other deleterious materials.

.2 Physical properties of Aggregates:

% Fracture, by weight (2 faces)	60 min.
Los Angeles Abrasion, loss, %	45 max.
Liquid Limit, %	25 max.
Plasticity Index, %	6 max.
Lightweight Particles, %	5 max.
California Bearing Ratio, when compacted to 100% of ASTM D698	80 min.

.3 Gradation to be within the following limits when tested to ASTM C-117 with sieve sizes to CAN/CGSBD 8-GP-2M rather than ASTM E11, and to have a smooth curve without sharp breaks when plotted on a semi-log grading chart.

Sieve Size	Percent Passing by Weight
25 000	100
20 000	85-97
16 000	70-94
10 000	52-79
5 000	35-64
1 250	18-43
630	12-34
315	8-26
160	5-18
80	2-10

Part 3 Execution

3.1 PREPARATION

.1 The Contractor shall maintain the subgrade to the specified section, free from ruts, waves and undulations until granular sub-base material is placed. The subgrade shall be in a firm dry condition and must be approved by the Departmental Representative before gravel is placed. The depositing of granular base or sub-base on a soft, muddy or rutted subgrade will not be permitted.

3.2 PLACING

.1 Place material on a clean unfrozen surface, properly shaped and compacted and free from snow and ice.

.2 Place using methods which do not lead to segregation or degradation of aggregate. Use approved methods to create uniform windrow of material along a crown line or high side of a one-way slope.

.3 Place material to full width in layers not exceeding 150 mm in compacted thickness.

.4 Shape each layer to a smooth contour and compact to the specified density before succeeding layer is placed.

.5 Remove and replace any portion of a layer in which material becomes segregated during compaction.

3.3 COMPACTING

.1 Moisture condition of granular sub-base and base course materials to be within plus or minus 3 percent of the optimum moisture content of the material.

.2 Compact to density not less than 98% of maximum dry density in accordance with ASTM D698 (Method C or D).

.3 Shape and compact alternately to obtain a smooth, even and uniformly compacted base.

.4 In areas not accessible to rolling equipment, compact to specified density with approved mechanical tampers.

3.4 FINISH TOLERANCES

.1 Finished sub-base and base surfaces shall be within plus or minus 10 mm of established grade, but not uniformly high or low.

.2 Correct surface irregularities by loosening and adding or removing materials until surface is within the specified tolerances.

3.5 MAINTENANCE

.1 Maintain finished base in a condition conforming to this section until succeeding material is applied or until acceptance.

3.6 TESTING

.1 The Departmental Representative shall perform all quality assurance tests for acceptance in accordance with the requirements of this section. Test data provided shall be final and binding on both the Department and the Contractor.

END OF SECTION

Part 1 General

1.1 ACTION AND INFORMATIONAL SUBMITTALS

.1 Make submittals in accordance with Section 01 33 00 - Submittal Procedures.

1.2 DEFINITIONS

.1 End Product Specification (EPS) – A specification whereby the methods of construction are not defined. Under EPS the Departmental Representative will monitor the Contractor's control of the process that produces the items of construction and will accept or reject the end product according to a specified acceptance plan. The Contractor is responsible for quality control. End product acceptance, including quality acceptance is responsibility of the Departmental Representative.

.2 Project Category – For the purposes of this specification, projects are to be identified as Category A or Category B. Generally, Category A projects have asphalt concrete quantities greater than 2,000 tonnes of any one mix type; and Category B projects have quantities of any one mix type less than 2,000 tonnes.

.3 Lot – A lot is a portion of the Work being considered for acceptance, and is defined as the following:

.1 Category A projects – One day of plant production, per mix type, when the day's quantity is greater than 1,000 tonnes. When a day's production is less than 1,000 tonnes, the material may be added to the previous or subsequent day(s) of production, at the Departmental Representative's discretion. The maximum Category A lot size shall be 2,000 tonnes.

.2 Category B projects – The entire project quantity for each mix type.

.3 At the Departmental Representative's discretion, any portion of the Work may be deemed a lot.

Part 2 Products

2.1 MATERIALS

.1 Asphalt Cement

.1 Asphalt Cement shall be prepared by the refining of petroleum and shall not foam when heated to 177 C.

.2 The tolerance allowed by ASTM for testing precision will be applied from acceptance of asphalt cement.

.2 Asphalt cement shall meet the following requirements:

REQUIREMENTS	ASTM TEST METHOD	VALUES
Kinematic Viscosity at 135 C, mm /sec	D2170	200-300

Absolute Viscosity at 60 C, 300 mm, hg Vacuum, Pa.S	D2170	60-100
Penetration at 0 C, 200g,. 60 sec; dmm	D5	30 min
Flash Point (Cleveland Open Cup) , C	D92	201 min.
Thin Film Oven Test. Penetration after test at 25 C, 100g, 5sec.; % of Original	D5	50 min
Ductility at 25 C and. 5 cm/min.; cm	D113	100 min
Solubility in Trichlorethylene, % by Mass	D2042	99.5 min.

.3 Aggregates:

.1 Coarse aggregate is aggregate retained of the 5 000 µm sieve; fine aggregate is aggregate passing the 5 000 µm sieve.

.2 Aggregate material shall be crushed stone or gravel consisting of hard, durable, angular particles, free from clay lumps, cementation, organic material, frozen material and other deleterious materials.

.3 Gradation to be within limits specified, when tested to ASTM C-136 and ASTM C-117 with sieve sizes to CAN/CGSB 8-GP-2M rather than ASTM E11.

.4 Aggregate shall be processed to meet the following requirements:

.1 Natural fines shall be pre-screened and stockpiled with not more than 10% of material retained in the 5 000 µm sieve and 100% passing the 10 000 µm sieve.

.2 Fine fraction or manufactured sand to contain not more than 20% of material retained on the 5 000 µm sieve.

.5 Physical properties of aggregates to meet the requirements in Table 2.1.1.5

Table 2.1.1.5
Aggregate Physical Property Requirements

REQUIREMENT	TEST STANDARD	MIX TYPES I, II AND III
Los Angeles Abrasion, Grading B (% loss)	C131	32.0 max.
Magnesium Sulphate Soundness (% loss) Coarse Aggregate:	C88	12.0 max.

Fine Aggregate:		12.0 max.
Lightweight Particles (%)	C123	1.5 max.

.6 Blend sand:

.1 To consist of natural of manufactured sand passing the 5 000 µm sieve.

.2 Stockpile volumes shall be maintained to ensure a minimum of 5 000 tonne of plant mix production at all times.

.7 Blended Aggregate Requirements:

.1 Aggregate Gradation Requirements, including RAP, to meet the requirements of Table 2.1.1.7.1.

Table 2.1.1.7.1
Blended Aggregate Gradation Requirements

SIEVE SIZE (µm)	Percent Passing					
	Type I		Type II		Type III	
	Max.	Min.	Max.	Min.	Max.	Min.
25 000	-	-	100	100	-	-
20 000	-	100	95	85	-	-
16 000	100	97	88	77	-	100
12 500	95	85	80	65	100	90
10 000	85	70	72	57	90	75
5 000	65	50	55	40	75	60
2 500	50	40	42	30	60	45
1 250	40	30	33	23	45	30
630	30	20	27	17	36	22
315	23	15	22	12	27	15
160	16	6	15	6	18	6
80	8.0	4.0	8.0	4.0	10.0	4.0

.2 Coarse Aggregate Fracture: Of coarse fraction (retained on 5 000 µm sieve size) the percentage of particles with two (2) or more fractured faces shall be by mass:

.1 Mix Type I – 80% minimum

.2 Mix Type II – 60% minimum

.3 Mix Type III – 80% minimum

.3 Flat and Elongated Particles: Of coarse fraction (retained on the 5 000 µm sieve size) the percentage of flat and elongated particles greater than a 5:1 ratio shall be by mass less than 10%.

.4 Manufactured Sand: Of total fine fraction (passing 5 000 µm sieve size), manufactured sand shall be by mass:

.1 Mix Type I – 70% minimum

.2 Mix Type II – 50% minimum

.3 Mix Type III – 50 % minimum

.5 For mixes incorporating RAP, 50% of the RAP sand portion shall be considered manufactured sand.

.6 The sand equivalent value (ASTM D2419, mechanical method) determined for the fine aggregate protion shall be:

.1 Mix Types I and III – 45% minimum

.2 Mix Type II – 40% minimum

.7 Of total aggregate, the maximum RAP portion shall be by mass:

.1 Mix Type I – 15% maximum

.2 Mix Type II – 15% maximum

.3 Mix Type III – 20% maximum

.8 Delivery and Storage

.1 Aggregates: Stockpile minimum of 50% of total amount of aggregate required before commencing trial mix designs.

.2 Reclaimed Asphalt Pavement (RAP): Stockpile minimum of 100% of total amount of RAP required before commencing trail mix designs.

2.2 MIX DESIGN

.1 An asphalt mix design must be prepared and submitted to the Departmental Representative for review and approval at least one week prior to the work. The Contractor shall use qualified engineering and testing services licensed to practice in the Province of Alberta.

.2 The mix design shall follow the Marshall method of mix design as outlined in the latest edition of the Asphalt Institute Manual Series No. 2 (MS-2), and shall include five separate trial values of asphalt content.

.3 Design of mix:

.1 Mix Types I and II – 75 blows on each face of test specimens.

.2 Mix Type III – 50 blows on each face of test specimens.

.4 Include the following data with mix design submission:

.1 Aggregate specific gravity and asphalt absorption.

.2 Sand equivalent, coarse aggregate fracture, flat and elongated particles, and percent manufactured sand values.

.3 Asphalt cement supplier/refinery, specific gravity and mixing and compaction temperatures, based on temperature-viscosity properties of asphalt cement.

.4 Job mix formula including aggregate gradation and blending proportions, and design asphalt content.

.5 Maximum relative density at each trial asphalt content.

.6 Where reclaimed asphalt pavement (RAP) is to be incorporated into the mix supply, RAP gradation, RAP asphalt cement content and design recycle percentage.

.7 Data to satisfy the requirements of the following:

Table 2.2.4.7
Mixture Physical Property Requirements

PROPERTY	REQUIREMENTS		
	Mix Type		
	I	II	III
Marshall Stability (kN)	10.0 min.	10.0 min.	5.4 min.
Marshall Flow (0.25 mm units)	8 - 14	8 – 15	8 – 14
Air Voids (%)	3.8 – 4.2	4.3 – 4.7	2.8 – 3.2
Voids in Mineral Aggregate (VMA) (%)	13.5 – 15.0	12.5 – 14.0	14.0 – 16.0
Voids Filled With Asphalt (VFA) (%)	65 – 75	60 – 70	70 – 80
Film Thickness (µm)	7.0 – 8.5	6.0 – 8.0	7.0 min.

2.3 JOB MIX FORMULA

.1 Subject to approval by the Departmental Representative, the aggregate proportioning (including RAP), target gradation, asphalt content and air void content from the Mix Design will become the Job Mix Formula for the supply of hot mix asphalt.

.2 Once established, no alterations to the Job Mix Formula will be permitted unless the Contractor submits a new Job Mix Formula and approved by the Departmental Representative.

.3 If the sum of any alterations to the Job Mix Formula is in excess of any one of the following limits, a new Mix Design is required.

± 5% passing the 5 000 µm sieve size

± 1% passing the 80µm sieve size

± 0.30% asphalt content

.4 Any alteration to the Job Mix Formula shall not result in properties which do not meet the requirements of this Specification.

2.4 PRODUCTION TOLERANCES

.1 All mixtures shall be supplied to the Job Mix Formula within the range of tolerances specified.

.2 Asphalt cement content: ± 0.30% of JMF value.

.3 Temperature: Mix temperature at point of plant discharge shall not vary from that specified in the JMF by more than ± 10°C.

.4 Aggregate Gradation:

AGGREGATE PASSING SIEVE SIZE (µm)	TOLERANCE (% BY MASS)

Max. Size to 5 000	± 5.0
2 500 & 1 250	± 4.0
630 & 315	± 3.0
160	± 2.0
80	± 1.0

.5 Air Voids: ± 1.0 % of the JMF value.

.6 Mixture Properties: Marshall Stability, Marshall Flow, Voids Filled with Asphalt, Voids in Mineral Aggregate, and Film Thickness as per requirements identified in Table 2.2.4.7.

.7 Moisture in Mix: Maximum permissible moisture, at point of plant discharge, is 0.2% by mass of mix.

.8 Asphalt cement recovered from freshly produced hot mix by the Abson Method, ASTM D1856 and subsequently tested in accordance with ASTM D5, shall retain a minimum value of 50% of its original penetration value.

Part 3 Sampling and Testing

3.1 GENERAL

.1 The Departmental Representative shall have access to all production processes and materials used for the work to monitor material quantity as often as deemed necessary. Such inspection and testing shall not relieve the Contractor of the responsibility for meeting the requirements of this specification.

.2 At least three (3) weeks prior to commencing work, inform the Departmental Representative of the proposed source of aggregates and provide access for sampling, and provide samples of asphalt cement.

3.2 QUALITY CONTROL

.1 Quality control is the responsibility of the Contractor throughout every stage of the work from aggregate processing to the final accepted product. Tests performed by the Departmental Representative will not be considered as quality control tests.

.2 The Contractor shall be totally responsible for production of materials and construction that meets all specified requirements.

.3 All quality control shall be conducted by qualified personnel. The Contractor shall bear the cost of all quality control testing and consulting services.

.4 Pre-Production testing and sampling and minimum frequencies are described in Table 3.2.4, Pre-Production Quality Control Requirements.

Table 3.2.4
Pre-Production Quality Control Requirements

Quality Control Requirement	Test Standard	Minimum Frequency
Asphalt Cement Certification	-	Once per year or for change in

		supplier.
Aggregate Physical Properties Table 2.1.1.5	Table 2.1.1.5	Once per year, or for change in source.
Crushed Coarse Aggregate Gradation Analysis and Fracture Content	ASTM C 136 ASTM D 5821	One for every 1,000 tonnes of each class of material processed into stockpile, or one analysis for each material, every production day when production rate is less than 1,000 tonnes.
Manufactured Sand Aggregate Gradation	ASTM C 117 ASTM C 126	
Natural Fine Aggregate Gradation	ASTM C 117 ASTM C 126	
Blend Sand Aggregate Gradation	ASTM C 117 ASTM C 126	
Reclaimed Asphalt Pavement (RAP) Asphalt Content and Extracted Aggregate Gradation	ASTM D 2172 ASTM C117 ASTM C 136	One for each 500 tonnes delivered to stockpile, or one for each location when delivery rate is less than 500 tonnes.
Penetration of Asphalt Cement Recovered from RAP by Abson Method	ASTM D 1856 ASTM D 5	One for each 2,000 tonnes delivered to stockpile.
Trial Mix Design by Marshall Method Section 2.2	Asphalt Institute MS-2	One per mix type every 3 years, or as required for a change in asphalt cement supply, aggregate gradation or aggregate source. See Note 1.
Plant Calibration	-	As required.

Note 1: A laboratory/plant JMF verification is required each year when a trial mix design is not conducted.

.5 Post-Production testing and sampling an minimum frequencies are described in Table 3.2.5, Recommended Post-Production Quality Control Requirements.

Table 3.2.5
Recommended Post-Production Quality Control Requirements

Quality Control Requirement	Test Standard	Minimum Frequency
Hot Mix Asphalt Analysis (including Asphalt Content, Aggregate Gradation, Marshall Density and Void Properties)	ASTM D 6307 ASTM C117 ASTM C 136 ASTM D 3203	One for every 500 tonnes of each mix type supplied under this specification. See note 1.
Quality Control Charts (including 3 test running average for Binder Content, Aggregate Gradation,	-	For each hot mix analysis. Test results and updated 3 test running average to be submitted to the

Marshall Density and Void Properties)		Departmental Representative as they become available.
Hot Mix Asphalt Temperature	-	Minimum frequency not specified.
Cold Feed Aggregate Analysis	ASTM C 117 ASTM C 1236	Minimum frequency not specified.
Maximum Relative Density of Hot Mix Asphalt	ASTM D 2041	Minimum frequency not specified.
Compaction Monitoring (Core or Nuclear Density)	ASTM D 2726 ASTM D 2950	Minimum frequency not specified. See note 2.

Note 1: Where an individual test indicates non-compliance, another test shall be initiated immediately.

Note 2: Coring is subject to approval by the Departmental Representative.

.6 Pre-Production Quality Control test data as specified in Table 3.2.4 shall be reported to the Departmental Representative one week prior to commencing the project, or as requested.

.7 Post-Production Quality Control test data as specified in Table 3.2.5 shall be reported to the Departmental Representative daily as the work proceeds.

3.3 QUALITY CONTROL COMPLIANCE WITH SPECIFIED TOLERANCES

.1 Asphalt Content, Aggregate Gradation and Mixture Properties

.1 The test data derived by Post-Production Quality Control mix testing, described in Section 3.2, shall be compared to the tolerances set forth in Section 2.4 of this specification. The Contractor shall document, and make available to the Departmental Representative, any adjustments made to correct non-compliance with the specified tolerances.

.2 The Contractor shall suspend mix production when the 3 test running average for any property is outside of te specified tolerance limits for three consecutive tests. Supply shall not commence again until it is demonstrated that corrective action has been taken.

.2 Hot Mix Asphalt Temperature

.1 Plant mix that does not meet temperature requirements of Section 2.4.3, at the point of plant discharge shall be subject to rejection at the discretion of the Departmental Representative.

3.4 ACCEPTANCE SAMPLING AND TESTING

.1 Within this specification, certain requirements, limits and tolerances are specified regarding supplied materials and workmanship. Compliance with these requirements shall be determined from acceptance testing as described in this section.

.2 Acceptance testing is the responsibility of the Departmental Representative.

.3 Initial acceptance testing will be undertaken free of cost to the Contractor.

.4 Sampling and acceptance testing is described in Table 3.4.4, Acceptance Testing Requirements – Category A & B Projects.

Table 3.4.4
Acceptance Testing Requirements – Category A & B Projects

Acceptance Testing	Test Standard	Minimum Frequency
Hot Mix Asphalt Analysis (including Binder Content, Aggregate Gradation, Marshall Density, Maximum Relative Density, Void Properties, Marshall Stability and Flow)	ASTM D 6307 ASTM C 117 ASTM C 136 ASTM D 2041 ASTM D 3203	For each mix type, one test for each 3,500 sq.m. of placement, or three tests per lot, whichever is greater. See note 1.
Compaction Testing (Core Density) and Thickness Determination	ASTM D 2726 ASTM D 3549	For each mix type, one test for each 2,000 sq.m. of placement, or three tests per lot, whichever is greater.
Hot Mix Asphalt Temperature	-	No minimum frequency.

Note 1: For Category B projects, the Departmental Representative may, at their discretion, acquire the minimum number of mix samples, but reduce the number of tests to a minimum of one (1). Should non-compliance be indicated by the sample(s) tested, the Departmental Representative reserves the option to test the remaining samples.

.5 Acceptance Sampling Procedures:

.1 Loose mix samples shall be acquired from the Work site in accordance with Albert Transportation Test (ATT) procedure ATT-37. Auger samples may be used if approved by both the Departmental Representative and the Contractor.

.2 The timing of mix sampling shall be stratified, with each sample representing a similar production quantity.

.3 Core locations will be selected using stratified random sampling procedures. The lot will be divided into segments meeting or exceeding the minimum frequency in Table 3.4.4 and of approximately equal area. In each segment a test site will be located using random numbers to determine the longitudinal and transverse coordinates.

.4 Areas within 3 metres of transverse joints or 0.3 metres of a mat edge are excluded from compaction acceptance sampling and testing.

.6 Reporting Protocols

.1 Test reporting accuracy shall be as stipulated in the referenced test procedures, including:

.1 Gradation to the nearest whole number, except the percent passing the 80 µm sieve, which shall be reported to the nearest 0.1%.

.2 Binder content to the nearest 0.01%.

.3 Air voids and compaction to the nearest 0.1%.

.4 Thickness to the nearest whole millimeter (mm).

.2 Lot averages shall be reported to the same accuracy as test results.

3.5 APPEAL OF ACCEPTANCE TESTING RESULTS

.1 General

.1 The Contractor may appeal the results of acceptance testing for Compaction Standard, Asphalt Content or Air Voids for any lot subject to rejection or unit price reduction. The notice of appeal shall be in writing and submitted to the Departmental Representative within 48 hours of receipt of the acceptance testing results.

.2 Appeals will only be considered if cause can be shown and the requirements of Table 3.2.5 have been satisfied.

.3 Quality Control tests initiated after the Contractor's receipt of the acceptance testing results will not be considered when evaluating cause for appeal.

.4 For Category A projects, only Quality Control testing during production for the subject project will be considered when evaluating cause for appeal. For Category B projects, Quality Control test results from production prior to the subject project may be considered when evaluating cause for appeal.

.2 Asphalt Content Appeal

.1 A stratified random sampling plan shall be developed by the Departmental Representative with the same number of segments as the original number of samples for the subject lot. Sufficient core samples will be acquired from each segment to enable asphalt content determinations.

.2 For asphalt content appeal testing, the Contractor will have the option for the testing to be done by the Departmental Representative or an independent testing laboratory selected by the Departmental Representative.

.3 The average of the appeal test results will be used for acceptance and unit price adjustment, and shall be binding on both the Departmental Representative and the Contractor.

.4 If the average appeal test result verifies that any unit price reduction of rejection applies for that Lot, the costs of the appeal sampling and testing will be borne by the Contractor. If the results show that a penalty or rejection no longer applies, the sampling and appeal costs will be the responsibility of the Departmental Representative.

.3 Compaction Standard or Air Void Appeals

.1 The testing laboratory conducting the project acceptance sampling and testing will routinely retain companion samples sufficient for the determination of maximum relative density and/or Marshall density.

.2 For compaction standard or air void (Marshall density) appeal testing, the Contractor will have the option for the testing to be done by the Departmental Representative or an independent testing laboratory selected by the Departmental Representative.

.3 The average of the appeal test results will be used for acceptance and unit price adjustment, and shall be binding on both the Departmental Representative and the Contractor.

.4 If the new compaction standard verifies that any unit price reduction of rejection applies for that Lot, the costs of the appeal sampling and testing will be borne by the Contractor. If the results show that a penalty or rejection no longer applies, the appeal costs will be the responsibility of the Departmental Representative.

Part 4

4.1 CONTINUITY OF PRODUCTION

.1 During the time period that work is in progress on any project for which this specification is in effect, and at the Departmental Representative's discretion, the plant may be limited to producing only the mix type required for that project.

4.2 MIX PRODUCTION

.1 Preparation of Mineral Aggregate

.1 The Mineral aggregates shall be at as low a temperature as is consistent with proper mixing and lay down and in no case to exceed 165°C.

.2 Composition of Mixture

.1 The mineral aggregate, reclaimed asphalt pavement (where applicable) and asphalt cement shall be mixed in a manner to produce a homogeneous mixture in which all particles of the mineral aggregate are uniformly coated.

.2 Incorporate RAP such that it does not come in direct contact with the burner flame.

.3 Plant emissions shall not exceed the limits set by Alberta Environment.

4.3 PREPARATION FOR PAVING

.1 The Contractor shall provide the Departmental Representative a minimum of six hours notice of the intention to commence paving over any previously approved primed or tacked surface.

.2 The hot asphalt mixture shall be laid upon a dry firm surface, true to grade and cross-section and free from all loose or foreign material. No hot mix shall be placed when the surface is wet or when other conditions prevent proper spreading, finishing or compaction.

.3 If undercutting, and subsequent backfill with asphalt concrete is done, the backfill operation shall be performed sufficiently far ahead of the paving operation to allow the asphalt concrete time to cool down enough to support equipment.

4.4 HOT MIX ASPHALT PLACING TEMPERATURE

.1 No hot mix asphalt shall be dispatched to the field unless the temperature, as issued by Environment Canada, is rising and meets the following minimum temperature requirements.

.1 Thickness less than 50 mm: 7°C

.2 Thickness greater than 50 mm: 2°C

.2 A tolerance will be permitted for plant start-up.

.3 No surface lift asphalt shall be placed regardless of temperature until the road surface is 5°C or higher.

4.5 HOURS OF OPERATION

.1 No loads of hot mix asphalt shall be dispatched from the plant after sunset or during hours of darkness unless loads can be placed and compacted in accordance with these specifications, and suitable artificial illumination is provided, all subject to the Departmental Representative's approval.

4.6 TRANSPORATION OF HOT MIX ASPHALT

.1 Trucks shall be equipped with tarpaulins of sufficient weights and size to cover the entire open area of the truck box. Regardless of weather conditions, tarpaulins shall be used.

.2 Vehicles used for the transportation of hot mix asphalt from the plant to the site of work shall have tight metal boxes previously cleaned of all foreign matter. The inside surface may be lightly lubricated with a soap solution just before loading. Excess lubrication will not be permitted.

.3 For purposes of checking asphalt mixture temperatures, trucks shall have an accessible 13 mm diameter hole drilled into the driver's side of the truck box, at a distance of 0.3 metres from the bottom of the box and 150 mm clear of the reinforcing ribs.

.4 The speed and weight of hauling trucks shall be regulated so that, in the opinion of the Departmental Representative, no damage will occur to any portion of the work underway. The Contractor at their own expense shall repair any damage to the tack coat, prime coat or the existing surface caused by the Contractor's equipment.

4.7 HOT MIX ASPHALT SPREADERS

.1 The spreading machine shall be self-propelled and capable of placing a uniform layer of asphalt mix to the depth and grades as shown on the plans or as indicated by the Departmental Representative.

.2 The screed shall include a tamping bar or vibratory strike-off device for use when required. The screed shall strike-off the mix to the depth and cross-section specified and produces a finished surface of uniform texture.

.3 Control of the screed shall be by automatic sensing devices. Longitudinal control shall be accomplished by a sensor, which follows a string line, ski, or other reference. The grade sensor shall be movable and mounts provided so that grade control can be established on either side of the paver. A slope control sensor shall also be provided to maintain the proper transverse slope of the screed. Use automatic grade control for paving operations.

4.8 HAND TOOLS

.1 Only lutes shall be used during the spreading operation and when the asphalt is worked by hand in areas in which the paver cannot reach.

.2 Tamping irons may be used to consolidate the material along structures inaccessible to the rollers. Mechanical compaction equipment, satisfactory to the Departmental Representative, may be used instead of tamping irons.

.3 For purposes of checking the finished surface, the Contractor must provide and carry on each paving machine a 3 metre straight edge and slope measuring level.

4.9 PRE-LEVELLING FOR ASPHALT CONCRETE

.1 Pre-levelling of uneven surfaces over which asphalt concrete is to be placed shall be accomplished by the use of asphalt concrete placed with a grader, paver, hand or by a combination of these methods.

.2 After placement, the asphalt concrete used for pre-levelling shall be compacted thoroughly with pneumatic tired rollers.

4.10 PAVING OPERATIONS

.1 The asphalt concrete shall be placed to the design thickness as shown on the contract drawings. On new construction where an established reference is lacking, a string-line reference will be required. Adjacent mats on the same lift are to be controlled by use of the grade sensor. No relaxation of the above procedure will be permitted without written approval of the Departmental Representative.

.2 The spreader shall be operated in such a manner as to distribute the asphalt concrete mix to proper cross section, width and thickness without causing segregation of the mix. Segregated areas, which may occur, shall be corrected immediately. The forward motion of the spreader shall be controlled so that no irregularities in the pavement surface are caused by excessive speed. The rate of placement of the mixture shall be uniform, and shall be co-ordinated with the production rate of the asphalt plant without intermittent operation of the spreader.

.3 Any failure of the machine or operation to produce a smooth, uniformly dense mat, free from irregularities, shall be corrected immediately to the satisfaction of the Departmental Representative.

4.11 AREAS INACCESSIBLE TO THE PAVING MACHINE

.1 Areas that are inaccessible to the paving machine may be paved by other methods, as approved by the Departmental Representative.

.2 In small areas or where the use of mechanical equipment is not practical, the mix may be spread and finished by hand. The asphalt mixture shall be dumped on the area and immediately thereafter distributed into place by shovels and spread with lutes in a loose uniform layer uniform density and correct depth. Material must be handled so as to avoid segregation.

4.12 COMPACTION

.1 The Contractor shall supply sufficient compaction equipment to:

.1 Provide a compaction rate that will equal or exceed the placing rate of the spreader.

.2 Ensure the specified compaction is attained before the temperature of the mat falls below 80°C.

4.13 LONGITUDINAL AND TRANSVERSE JOINTS

.1 Longitudinal and transverse joints shall be made in a manner consistent with industry standards. Coarse aggregate removed from the hot mix during joint preparation shall not be broadcast onto the mat.

.2 Paving joints shall not be placed in the same vertical plane. Longitudinal joints shall be offset at least 150 mm and transverse joints shall be offset at least 2 metres.

.3 Longitudinal joints shall not be located within travel lanes, unless approved by the Departmental Representative.

.4 Edges where additional pavement is to be placed shall be vertically formed to true line. A lute shall be used immediately behind the paver when required to obtain a true line and vertical edge.

.5 The exposed edges of all cold asphalt joints and the face of concrete curb and gutter shall be cleaned and painted with a thin coat of asphalt tack.

.6 At the end of each day's paving of the surface course and upper lift of the base course mix, the uncompleted paving mats shall be provided with vertically cut transverse joints. Joints between old and new pavements or between successive days' work shall be carefully made in such a manner as to ensure a thorough and continuous bond between the old and new surfaces.

4.14 OPENING TO TRAFFIC

.1 Prior to any application of traffic, paving mats shall be sufficiently cool to resist and deformation or surface scuffing.

.2 The Departmental Representative may, at their discretion, require means of cooling (e.g. application of water) completed pavements prior to opening to traffic.

.3 At their discretion, the Departmental Representative may prohibit traffic from travelling on newly paved surfaces for any length of time deemed necessary.

Part 5

5.1 GENERAL

.1 The Contractor shall provide an end product conforming to the quantity and tolerance requirements of this specification. Where no tolerances are specified, the standard of workmanship shall be in accordance with accepted industry standards.

.2 Acceptance of any Lot at full or increased payment will occur if there are no obvious defects and the Lot mean results for asphalt content, pavement density, air voids and thickness meet or exceed the specified tolerances.

.3 Unit price reductions will only be applied on the basis of full acceptance testing in accordance with Table 3.4.4.

5.2 ASPHALT CONTENT

.1 For full payment, the Lot Mean Asphalt Content must be within ± 0.30% of the approved JMF value, as specified in Section 2.4.

.2 Payment adjustment for asphalt content is as follows:

Asphalt Content Deviation from JMF Value (%)	Payment Adjustment Factor
± 0.30 or less	1.00
± 0.31 to ± 0.50	As per Chart A
Greater than ± 0.50	Reject (Note 1)

Note 1: Subject to removal and replacement at the discretion of the Departmental Representative.

5.3 PAVEMENT COMPACTION

.1 For full or increased payment, the Lot Mean Pavement Compaction must be equal to or greater than 93% of the Lot Mean Maximum Relative Density.

.2 Payment adjustment for pavement compaction is as follows:

Pavement Compaction % of Maximum Relative Density	Payment Adjustment Factor
94.6 to 95.5 (Note 1)	1.03
93.5 to 94.5 (Note 1)	1.02
93.0 to 93.4	1.00
90.0 to 92.9	As per Chart B
Less than 90.0	Reject (Note 2)

Note 1: Where no individual test result is less than 93% otherwise the payment adjustment factor 1.00.

Note 2: Subject to removal and replacement at the discretion of the Departmental Representative.

5.4 AIR VOID CONTENT

.1 For full payment, the Lot Mean Air Voids must be within ± 1.0% of the JMF value, as specified in Section 2.4.

.2 Payment adjustment for air void content is as follows:

Air Void Content % Deviation from JMF Value	Payment Adjustment Factor
Less than 1.0	1.00
1.0 to 2.0	As per Chart C

Greater than 2.0 (Lower Lifts)	0.80
Greater than 2.0 (Upper Lifts)	0.60

5.5 THICKNESS (NEW CONSTRUCTION AND TOP LIFT ONLY)

.1 Pavement of any type found to be deficient in thickness by more than 13.0 mm shall be removed and replaced by pavement of specified thickness, at the Contractor's expense.

.2 The Lot Mean Thickness for any Lot will be determined on the basis of the acceptance cores described in Table 3.4.4. Core thickness shall be determined in accordance with ASTM D 3549.

.3 If the deficiency of any individual core exceeds 13 mm, additional cores may be extracted in the proximity to the location of the core of excessive deficiency, to identify the extremities of the pavement area subject to be removed and replaced. The Contractor shall pay for such additional coring.

.4 For full payment, the Lot Mean Thickness must be equal to, or greater than, the specified thickness.

.5 Payment adjustment for the thickness is as follows:

Average Thickness Compared to Specified Thickness	Payment Adjustment Factor (Note 1)	
	Total Thickness (Single or Multiple Lifts)	Top Lift Thickness (Multiple Lifts)
Compliant or Greater	1.00	1.00
1 mm to 13 mm Deficient	As Per Chart D	As Per Chart D
More than 13 mm Deficient	Reject (Note 2)	Reject (Note 2)

Note 1: As single Thicknes Payment Adjustment Factor shall be applied. Total Thickness of Top Lift Thickness, whichever results in the greatest adjustment.

Note 2: Subject to removal and replacement at the discretion of the Departmental Representative.

5.6 SMOOTHNESS

.1 The completed asphalt concrete surface shall be true to the dimensional and tolerance requirements of the specifications and drawings. Unless detailed otherwise in the contract documents, the tolerances in both profile and crown are:

.1 Base course: 10 mm in 3 m

.2 Surface Course: 5 mm in 3 m

.2 When deviations in excess of the above tolerances are found, the pavement surface shall be corrected by methods satisfactory to the Departmental Representative. Correction of defects shall be carried out until there are no deviations anywhere greater than the allowable tolerances.

5.7 SEGREGATION

.1 The finished surface shall have a uniform texture and be free of segregated areas. A segregated area is defined as an area of the pavement where the texture differs visually from the texture of the surrounding pavement.

.2 All segregation will be evaluated by the Departmental Representative to determine repair requirements.

.3 The severity of segregation will be rated as follows:

.1 Slight: The matrix of asphalt cement and fine aggregates is in place between the coarse aggregate particles, however there is more stone in comparison to the surrounding acceptable mix.

.2 Moderate: Significantly more stone that the surrounding mix, and exhibit a lack of surrounding matrix.

.3 Severe: Appears as an area of very stony mix, stone against stone, with very little or no matrix.

.4 Segregated areas shall be repaired by the Contractor. The following methods of repair are identified.

.1 Slight: Squeegee asphalt to completely fill the surface voids.

.2 Moderate: Slurry seal for full mat width.

.3 Severe: Removal and replacement or overlay.

.5 All repairs shall be regular in shape and finished using good workmanship practices to provide and appearance suitable to the Departmental Representative.

.6 Any other methods of repair proposed by the Contractor will be subject to the approval of the Departmental Representative.

.7 Repairs will be carried out by the Contractor at their expense.

Part 6

6.1 PAYMENT ADJUSTMENTS

.1 The Unit Price applicable to each Lot quantity as asphalt concrete will be calculated as follows:

LOT UNIT PRICE = CONTRACT UNIT PRICE x PA_{AC} x PA_{COM} x PA_{AV} x PA_T

Where:

PA_{AC} = Asphalt Content Payment Adjustment

PA_{COM} = Compaction Payment Adjustment

PA_{AV} = Air Void Payment Adjustment

PA_T = Thickness Payment Adjustment

CHART A
ASPHALT CONTENT
PAYMENT ADJUSTMENT FACTOR

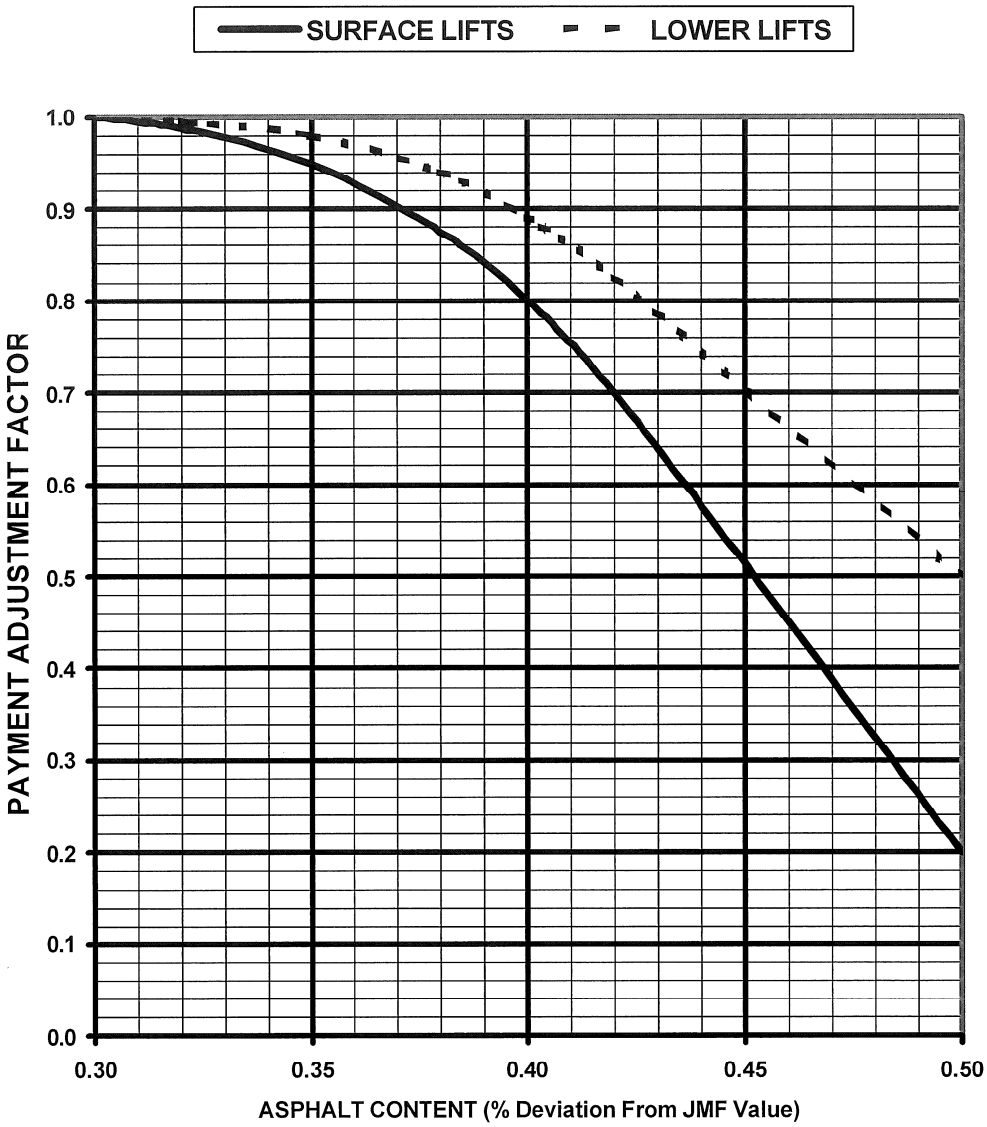

CHART B
COMPACTION
PAYMENT ADJUSTMENT FACTOR

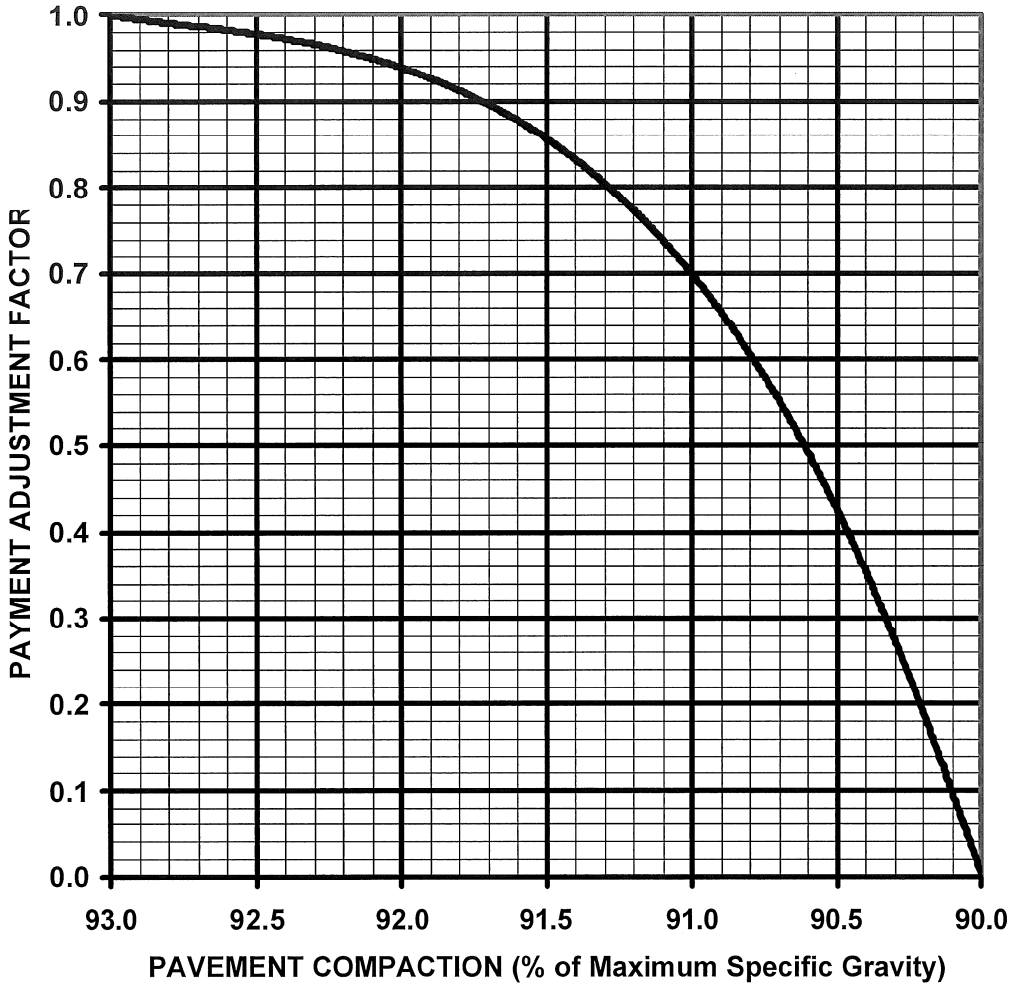

CHART C
AIR VOID CONTENT
PAYMENT ADJUSTMENT FACTOR

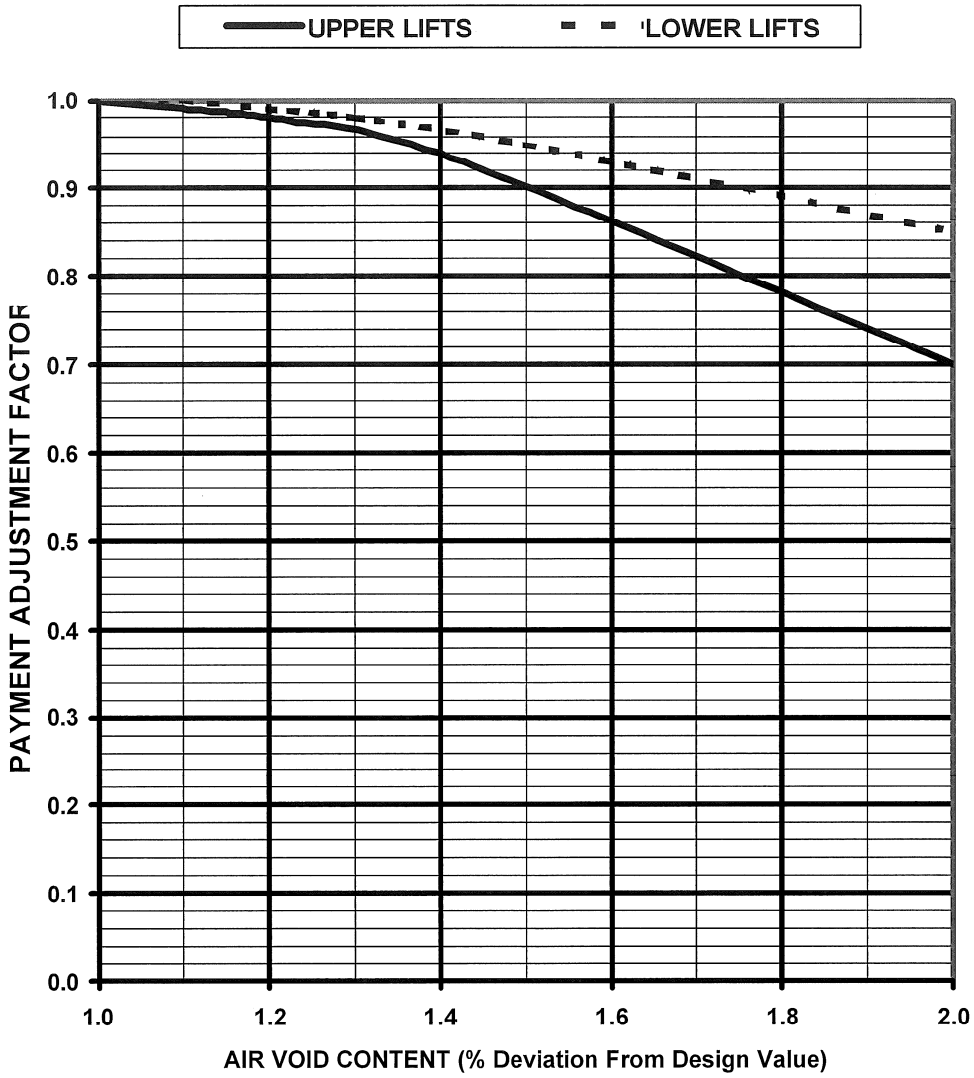

CHART D
AVERAGE THICKNESS
PAYMENT ADJUSTMENT FACTOR

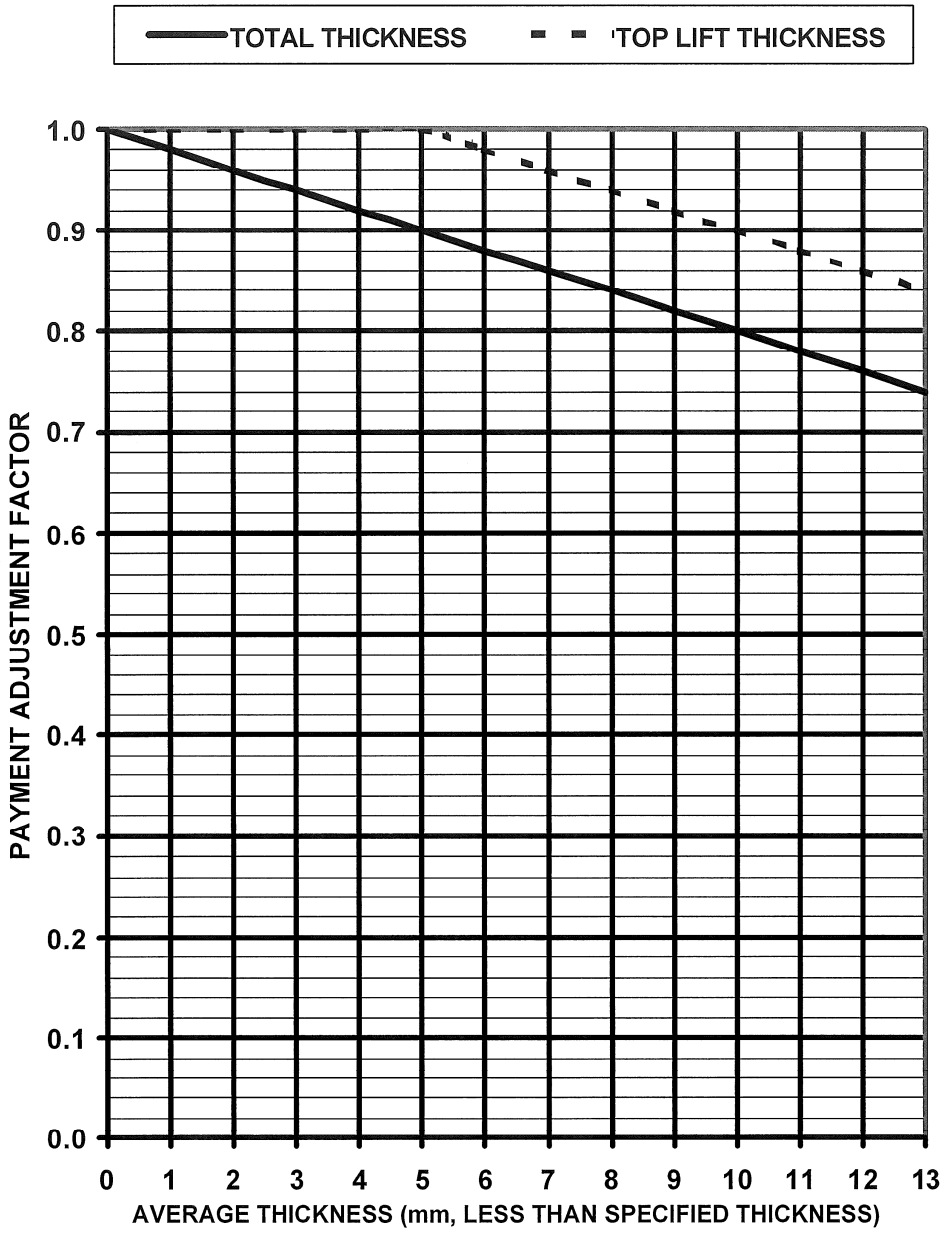

END OF SECTION

Part 1 General

1.1 MEASUREMENT PROCEDURES

.1 Asphalt tack coat will be considered incidental to asphalt costs. No additional payment will be made for asphalt tack.

1.2 ACTION AND INFORMATIONAL SUBMITTALS

.1 Submit in accordance with Section 01 33 00 - Submittal Procedures.

.2 Samples:

.1 Submit two - 1 L samples of asphalt tack coat material proposed for use in new, clean, airtight, sealed, wide mouth jars or bottles made with plastic to Departmental Representative, at least 2 weeks prior to beginning Work.

.2 Sample asphalt tack coat material to: ASTM D 140.

.3 Provide access on tank truck for Departmental Representative to sample asphalt material to be incorporated into Work to ASTM D 140.

1.3 QUALITY ASSURRANCE

.1 Upon request from Departmental Representative, submit manufacturer's test data and certification that asphalt prime material meets requirements of this Section.

1.4 DELIVERY, STORAGE AND HANDLING

.1 Deliver, store and handle materials in accordance with Section 01 61 00 - Common Product Requirements and with manufacturer's written instructions.

.2 Delivery and Acceptance Requirements: deliver materials to site in original factory packaging, labeled with manufacturer's name and address.

.3 Storage and Handling Requirements:

.1 Store materials off ground, indoors, in dry location and in accordance with manufacturer's recommendations in clean, dry, well-ventilated area.

.2 Store and protect asphalt tack coats from nicks, scratches, and blemishes.

.3 Replace defective or damaged materials with new.

.4 Deliver, store and handle materials in accordance with ASTM D 140.

.5 Provide, maintain and restore asphalt storage area.

Part 2 Products

2.1 MATERIALS

.1 Asphalt tack: Anionic emulsified asphalt, slow setting SS-1h

.2 Cut-back asphalt; to AASHTO M081-92-UL, grade RC-70 or RC-250.

.3 Water: clean, potable, free from foreign matter.

2.2 EQUIPMENT

.1 Equipment required for Work of this Section to be in satisfactory working condition and maintained for duration of Work.

.2 Pressure distributor:

.1 Designed, equipped, maintained and operated so that asphalt material can be:

.1 Maintained at even temperature.

.2 Applied uniformly on variable widths of surface up to 5 m

.3 Applied at readily determined and controlled rates from 0.2 to 5.4 L/m^2 with uniform pressure, and with allowable variation from any specified rate not exceeding 0.1 L/m^2.

.4 Distribute in uniform spray without atomization at temperature required.

.2 Equipped with meter, registering travel in metres per minute, visibly located to enable truck driver to maintain constant speed required for application at specified rate.

.3 Equipped with pump having flow meter graduated in units of 5 L or less per minute passing through nozzles and readily visible to operator. Pump power unit to be independent of truck power unit.

.4 Equipped with easily read, accurate and sensitive device which registers temperature of liquid in reservoir.

.1 Measure temperature to closest whole number.

.5 Equipped with accurate volume measuring device or calibrated tank.

.6 Equipped with nozzles of same make and dimensions, adjustable for fan width and orientation.

.7 Equipped with nozzle spray bar, with operational height adjustment in increments of 0.6 metres and capable of being raised or lowered.

.8 Cleaned if previously used with incompatible asphalt material.

Part 3 Execution

3.1 APPLICATION

.1 Apply asphalt tack coat only on clean and dry surface.

.2 Dilute asphalt emulsion with water at 1:1 ratio for application.

.1 Mix thoroughly by pumping or other method approved by Departmental Representative.

.3 Apply asphalt tack coat evenly to pavement surface at rate of 0.5L/sq. m.

.4 Paint contact surfaces of curbs, gutters, headers, manholes and like structures with thin, uniform coat of asphalt tack coat material.

.5 Apply asphalt tack coat only when air temperature greater than 10 degrees C and when rain is not forecast within 2 hours minimum of application.

.6 Apply asphalt tack coat only on unfrozen surface.

.7 Evenly distribute localized excessive deposits of tack coat by brooming.

.8 Where traffic is to be maintained, treat no more than one half of width of surface in one application.

.1 Control traffic in accordance with Section 01 35 00 - Special procedures for Traffic control.

.9 Keep traffic off tacked areas until asphalt tack coat has set.

.10 Re-tack contaminated or disturbed areas.

.11 Permit asphalt tack coat to set before placing asphalt pavement.

.12 Submit summary report within 7 days minimum of date of application and include information as follows:

.1 Total area tack coated.

.2 Quantity of tack coat used.

.3 Mean application rate.

.4 Actual product quantity used when using equipment on pressure distributors.

.5 Dipstick measurements or electronic printouts are acceptable.

.13 Carry out measurements in presence of Departmental Representative upon request.

.14 Inspect tack coat application to ensure uniformity.

.1 Re-spray areas of insufficient or non-uniform tack coat coverage.

.2 Ensure tack coating performed using hand held devices is consistent in appearance with adjacent areas of machine applied material.

3.2 CLEANING

.1 Progress Cleaning: clean in accordance with Section 01 74 11 – Cleaning.

.1 Leave Work area clean at end of each day.

.2 Final Cleaning: upon completion remove surplus materials, rubbish, tools and equipment in accordance with Section 01 74 11 – Cleaning.

END OF SECTION

Part 1 General

1.1 MEASUREMENT PROCEDURES

.1 Asphalt prime will be considered incidental to asphalt costs. No additional payment will be made for asphalt prime.

1.2 Submit in accordance with Section 01 33 00 - Submittal Procedures.

.1 Samples:

.1 Submit two 1 L samples of asphalt prime proposed for use in new, clean, air tight sealed, wide mouth, jars or bottles made with plastic, to Departmental Representative, 2 weeks prior to commencing Work.

.2 Sample asphalt prime coat materials in accordance with ASTM D 140.

.3 Provide access on tank truck for Departmental Representative to sample asphalt material to be incorporated into Work, in accordance with ASTM D 140.

1.3 QUILITY ASSURRANCE

.1 Upon request from Departmental Representative, submit manufacturer's test data and certification that asphalt prime material meets requirements of this Section.

1.4 DELIVERY, STORAGE AND HANDLING

.1 Storage and Handling Requirements:

.1 Deliver, store and handle materials to ASTM D 140.

.2 Store materials off ground, indoors, in dry location and in accordance with manufacturer's recommendations in clean, dry, well-ventilated area.

.3 Store and protect asphalt prime coats from nicks, scratches, and blemishes.

.4 Replace defective or damaged materials with new.

Part 2 Products

2.1 MATERIAL

.1 Asphalt tack: Anionic emulsified asphalt, slow setting SS-1h

.2 Sand blotter: clean granular material passing 4.75 mm sieve and free from organic matter or other deleterious materials.

.3 Water: clean, potable, free from foreign matter.

2.2 EQUIPMENT

.1 Pressure distributor:

.1 Designed, equipped, maintained and operated so that asphalt material can be:

.1 Maintained at even temperature.

.2 Applied uniformly on variable widths of surface up to 5 m.

.3 Applied at controlled rates from 0.2 to 5.4 L/m^2 with uniform pressure, and allowable variation from any specified rate not exceeding 0.1 L/m^2.

.4 Distributed in uniform spray without atomization at temperature required.

.2 Equipped with meter registering travel distance in metres per minute, visibly located to enable truck driver to maintain constant speed required for application at specified rate.

.3 Equipped with pump having flow meter graduated in units of 5 L or less per minute passing through nozzles and readily visible to operator.

.1 Pump power unit to be independent of truck power unit.

.4 Equipped with easily read, accurate and sensitive device which registers temperature of liquid in reservoir.

.1 Temperature to be measured to nearest whole number.

.5 Equipped with accurate volume measuring device or calibrated tank.

.6 Equipped with nozzles of same make and dimensions, adjustable for fan width and orientation.

.7 Equipped with nozzle spray bar, with operational height adjustment in increments of 0.6 metres and capable of being raised or lowered.

.8 Cleaned if previously used with incompatible asphalt material.

.2 Aggregate Spreader:

.1 Apply blotter sand to primed surfaces using roll type spreader, or rotating disc sander capable of applying aggregate at variable widths and at variable rates.

Part 3 Execution

3.1 APPLICATION

.1 Proceed with application of tack coat only after receipt of written approval of granular base surface from Departmental Representative.

.2 Cutback asphalt:

.1 Heat asphalt prime for pumping and spraying.

.2 Apply on dry surface.

.3 Anionic emulsified asphalt:

.1 Dilute asphalt emulsion with clean water at 1:1 ratio for application.

.2 Mix thoroughly by pumping or other method approved by Departmental Representative.

.3 Apply asphalt tack coat evenly to pavement surface at rate of 0.5L/sq. m.

.4 Apply diluted asphalt emulsion on damp surface unless otherwise directed by Departmental Representative.

.4 Apply asphalt prime only on unfrozen surface.

.5 Apply asphalt tack coat only when air temperature is greater than 10 degrees C and when rain is not forecast within 2 hours minimum of application.

.6 Paint contact surfaces of curbs, gutters, headers, manholes and like structures with thin, uniform coat of asphalt prime material.

.7 Where traffic is to be maintained, treat no more than one-half width of surface in one application.

.8 Prevent overlap at junction of applications.

.9 Do not prime surfaces that will be visible when paving is complete.

.10 Apply additional material to areas not sufficiently covered

.11 Keep traffic off primed areas until asphalt prime has cured.

.1 Control traffic in accordance with Section 01 35 00.06 - Special Procedures for Traffic Control.

.12 Permit prime to cure before placing asphalt paving.

3.2 USE OF SAND BLOTTER

.1 If asphalt prime fails to penetrate within 24 hours, spread sand blotter material in amounts required to absorb excess material.

.2 Allow sufficient time for excess prime to be absorbed

.3 Apply second application of sand blotter as required.

.4 Do not roll blotter sand.

.5 Sweep and remove excess blotter material.

3.3 CLEANING

.1 Progress Cleaning: clean in accordance with Section 01 74 11 – Cleaning.

.1 Leave Work area clean at end of each day.

.2 Final Cleaning: upon completion remove surplus materials, rubbish, tools and equipment in accordance with Section 01 74 11 – Cleaning.

END OF SECTION

Part 1 General

1.1 ACTION AND INFORMATIONAL SUBMITTALS

.1 Submittals in accordance with Section 01 33 00 - Submittal Procedures.

.2 Inform Departmental Representative of proposed source of materials and provide access for sampling at least 2 weeks prior to commencing work.

.3 If materials have been tested by accredited testing within previous 2 months and have passed tests equal to requirements of this specification, submit test certificates from testing laboratory showing suitability of materials for this project.

Part 2 Products

2.1 MATERIALS

.1 Concrete mixes and materials: in accordance with Section 03 30 00 - Cast-in-Place Concrete.

.2 Granular base: material to Section 31 05 16 - Aggregate Materials and following requirements:

.1 Type 1, 2 or 3 fill.

.2 Crushed stone or gravel.

.3 Gradations: within limits specified when tested to ASTM C 136 and ASTM C 117. Sieve sizes to CAN/CGSB-8.1.

.3 Non-staining mineral type form release agent: chemically active release agents containing compounds that react with free lime to provide water-soluble soap.

.4 Fill material: to Section 31 05 16 - Aggregate Materials and following requirements:

.1 Type 1, 2 or 3 fill.

.2 Crushed stone or gravel.

.3 Gradations: within limits specified when tested to ASTM C 136 and ASTM C 117. Sieve sizes to CAN/CGSB-8.1.

Part 3 Execution

3.1 GRADE PREPARATION

.1 Do grade preparation work in accordance with Section 31 23 33 - Excavating, Trenching and Backfilling.

.2 Construct embankments using excavated material free from organic matter or other objectionable materials.

.1 Dispose of surplus and unsuitable excavated material outside of Waterton Lakes National Park.

.3 Place fill in maximum 150 mm layers and compact to at least 98% of maximum dry density to ASTM D 698.

3.2 GRANULAR BASE

.1 Obtain Departmental Representative's approval of subgrade before placing granular base.

.2 Place granular base material to lines, widths, and depths as indicated.

.3 Compact granular base in maximum 150 mm layers to at least 98% of maximum density to ASTM D 698.

3.3 CONCRETE

.1 Obtain Departmental Representative’s approval of granular base prior to placing concrete.

.2 Do concrete work in accordance with Section 03 30 00 - Cast-in-Place Concrete.

.3 Immediately after floating, give sidewalk surface uniform broom finish to produce regular corrugations not exceeding 2 mm deep, by drawing broom in direction normal to centre line.

.4 Provide edging as indicated with 10 mm radius edging tool.

.5 Slip-form pavers equipped with string line system for line and grade control may be used if quality of work acceptable to Departmental Representative can be demonstrated. Hand finish surfaces when directed by Departmental Representative.

3.4 TOLERANCES

.1 Finish surfaces to within 3 mm in 3 m as measured with 3 m straightedge placed on surface.

3.5 EXPANSION AND CONTRACTION JOINTS

.1 Install tooled transverse contraction joints after floating, when concrete is stiff, but still plastic, at intervals shown on the drawings.

.2 Install expansion joints.

.3 When sidewalk is adjacent to curb, make joints of curb, gutters and sidewalk coincide.

3.6 ISOLATION JOINTS

.1 Install isolation joints around manholes and catch basins and along length adjacent to concrete curbs, catch basins, buildings, or permanent structure.

.2 Install joint filler in isolation joints in accordance with Section 03 30 00 - Cast-in-Place Concrete.

.3 Seal isolation joints with sealant.

3.7 CURING

.1 Cure concrete by adding moisture continuously in accordance with CSA-A23.1/A23.2 to exposed finished surfaces for at least 1 day after placing, or sealing moisture in by curing compound.

.2 Where burlap is used for moist curing, place two prewetted layers on concrete surface and keep continuously wet during curing period.

.3 Apply curing compound evenly to form continuous film, in accordance with manufacturer's requirements.

3.8 BACKFILL

.1 Allow concrete to cure for 7 days prior to backfilling.

.2 Backfill to designated elevations with material as shown on the drawings

.1 Compact and shape to required contours.

3.9 CLEAINING

.1 Proceed in accordance with Section 01 74 11 – Cleaning.

.2 On completion and verification of performance of installation, remove surplus materials, excess materials, rubbish, tools and equipment.

END OF SECTION

Part 1 General

1.1 ACTION AND INFORMATIONAL SUBMITTALS

.1 Submit in accordance with Section 01 33 00 - Submittal Procedures.

.2 Product Data:

.1 Submit manufacturer's printed product literature and data sheets for pavement markings and include product characteristics, performance criteria, physical size, finish and limitations.

.3 Samples:

.1 Submit to Departmental Representative following material sample quantities at least 2 weeks prior to commencing work.

.1 Two 1 L samples of each type of paint.

.2 One 1 kg sample of glass beads.

.2 Mark samples with name of project and its location, paint manufacturer's name and address, name of paint, specification number and formulation number and batch number.

1.2 DELIVERY, STORAGE AND HANDLING

.1 Delivery and Acceptance Requirements: deliver materials to site in original factory packaging, labelled with manufacturer's name and address.

.2 Storage and Handling Requirements:

.1 Store materials off ground, indoors, in dry location and in accordance with manufacturer's recommendations in clean, dry, well-ventilated area.

.2 Replace defective or damaged materials with new.

Part 2 Products

2.1 MATERIALS

.1 Paint and Markings:

.1 To CGSB 1-GP-74M-79, Paint, Traffic, Alkyd.

.2 Colour: to CGSB 1-GP-12C-68, yellow 505-308, white 513-301.

.2 Thinner: to CAN/CGSB-1.5.

.3 Glass reflective beads: type suitable for application to wet paint surface for light reflectance.

Part 3 Execution

3.1 EXAMINATION

.1 Verification of Conditions: verify conditions of substrates and surfaces to receive pavement markings previously installed under other Sections or Contracts are acceptable for product installation in accordance with MPI instructions prior to pavement markings installation.

.1 Visually inspect substrate in presence of Departmental Representative.

.2 Pavement surface: dry, free from water, frost, ice, dust, oil, grease and other deleterious materials.

.3 Proceed with Work only after unacceptable conditions have been rectified.

3.2 EQUIPMENT REQUIREMENTS

.1 Paint applicator: approved pressure type mobile with positive shut-off distributor capable of applying paint in single, double and dashed lines and capable of applying marking components uniformly, at rates specified, and to dimensions as indicated.

.2 Distributor: capable of applying reflective glass beads as overlay on freshly applied paint.

3.3 APPLICATION

.1 Pavement markings: laid out by Contractor.

.2 Unless otherwise approved by Departmental Representative, apply paint only when air temperature is above 10 degrees C, wind speed is less than 60 km/h and no rain is forecast within next 4 hours.

.3 Apply traffic paint evenly at rate of 3 m^2/L.

.4 Do not thin paint unless approved by Departmental Representative.

.5 Symbols and letters to dimensions indicated.

.6 Paint lines of uniform colour and density with sharp edges.

.7 Thoroughly clean distributor tank before refilling with paint of different colour.

.8 Apply glass beads at rate of 200 g/m2 of painted area immediately after application of paint.

3.4 TOLERANCE

.1 Paint markings: within plus or minus 12 mm of dimensions indicated.

.2 Remove incorrect markings to the satisfaction of the Departmental Representative.

3.5 CLEANING

.1 Progress Cleaning: clean in accordance with Section 01 74 11 – Cleaning.

.1 Leave Work area clean at end of each day.

.2 Final Cleaning: upon completion remove surplus materials, rubbish, tools and equipment in accordance with Section 01 74 11 – Cleaning.

3.6 PROTECTION

.1 Protect pavement markings until dry.

.2 Repair damage to adjacent materials caused by pavement marking application.

END OF SECTION

Part 1 General

1.1 ACTION AND INFORMATIONAL SUBMITTALS

.1 Submit in accordance with Section 01 33 00 - Submittal Procedures.

Part 2 Not Used

2.1 NOT USED

Part 3 Execution

3.1 EXAMINATION

.1 Verification of Conditions: verify conditions of substrate previously installed under other Sections or Contracts are acceptable for fence and gate installation in accordance with manufacturer's written instructions.

.1 Visually inspect substrate in presence of Departmental Representative.

.2 Inform Departmental Representative of unacceptable conditions immediately upon discovery.

.3 Proceed with installation only after unacceptable conditions have been remedied and after receipt of written approval to proceed from Departmental Representative.

3.2 PREPARATION

.1 Grading:

.1 Level ground along fence line prior to reinstallation.

3.3 ERECTION OF FENCE

.1 Erect fence along lines as directed by Departmental Representative.

.2 Installation of posts:

.1 Space posts to match current fence as directed by Departmental Representative.

.2 Install posts true to line and plumb.

.3 Fencing with wood posts:

.1 Backfill around posts and compact to same density as surrounding ground. Dispose of surplus material as directed by Departmental Representative.

.2 Erect wires and stretch to have uniform tension.

3.4 CLEANING

.1 Progress Cleaning: clean in accordance with Section 01 74 11 – Cleaning.

.1 Leave Work area clean at end of each day.

.2 Clean and trim areas disturbed by operations. Dispose of surplus material and replace damaged turf with sod as directed by Departmental Representative.

.3 Final Cleaning: upon completion remove surplus materials, rubbish, tools and equipment in accordance with Section 01 74 11 – Cleaning.

END OF SECTION

Part 1 General

1.1 MEASUREMENT PROCEDURES

.1 Preparation of sub-grade for placing of topsoil will not be measured for payment.

.2 Topsoil stripping is incidental to contract unit prices.

.3 Topsoil Placement and grading will be measured in square metres.

.4 Imported Topsoil will be measured in cubic metres.

Part 2 Not Used

2.1 NOT USED

Part 3 Execution

3.1 TEMPORARY EROSION AND SEDIMENTATION CONTROL

.1 Provide temporary erosion and sedimentation control measures to prevent soil erosion and discharge of soil-bearing water runoff or airborne dust to adjacent properties and walkways, according to requirements of authorities having jurisdiction.

.2 Inspect, repair, and maintain erosion and sedimentation control measures during construction until permanent vegetation has been established.

.3 Remove erosion and sedimentation controls and restore and stabilize areas disturbed during removal.

3.2 STRIPPING OF TOPSOIL

.1 Begin topsoil stripping of areas as indicated and remove to stockpile location within Waterton Lakes National Park at Upper Compound (approx.3.5 km from Site).

.2 Avoid mixing topsoil with subsoil where textural quality will be moved outside acceptable range of intended application.

.3 Stockpile height not to exceed 2 m.

.4 Protect stockpiles from contamination and compaction.

.5 Stripped sod shall be broken into 2 in or smaller pieces and mixed with the topsoil.

.6 The contractor shall import topsoil to mix with stockpiled salvaged topsoil at the Upper Compound at a ratio of 1:2. The supplier source of the imported topsoil must be approved by the Departmental Representative prior to import into Waterton Park.

3.3 PREPARATION OF EXISTING GRADE

.1 Verify that grades are correct.

.1 If discrepancies occur, notify Departmental Representative and do not commence work until instructed by Departmental Representative.

.2 Grade soil, eliminating uneven areas and low spots, ensuring positive drainage.

.3 Remove debris, roots, branches, stones in excess of 50 mm diameter and other deleterious materials.

.1 Remove soil contaminated with calcium chloride, toxic materials and petroleum products.

.2 Remove debris which protrudes more than 75 mm above surface..

.3 Dispose of removed material off site.

3.4 PLACING AND SPREADING OF TOPSOIL/PLANTING SOIL

.1 Place topsoil after Departmental Representative has accepted subgrade.

.2 Spread topsoil in uniform layers not exceeding 100 mm.

.3 For sodded areas keep topsoil 15 mm below finished grade.

.4 Spread topsoil to following minimum depths after settlement.

.1 100 mm for seeded areas.

.2 100 mm for sodded areas.

.3 300 mm for flower beds.

.4 500 mm for shrub beds.

.5 Manually spread topsoil/planting soil around trees, shrubs and obstacles.

3.5 FINISH GRADING

.1 Grade to eliminate rough spots and low areas and ensure positive drainage.

.1 Prepare loose friable bed by means of cultivation and subsequent raking.

.2 Consolidate topsoil to required bulk density using equipment approved by Departmental Representative.

.1 Leave surfaces smooth, uniform and firm against deep footprinting.

3.6 ACCEPTANCE

.1 Departmental Representative will inspect and test topsoil in place and determine acceptance of material, depth of topsoil and finish grading.

3.7 SURPLUS MATERIAL

.1 Dispose of materials except topsoil not required outside of Waterton Lakes National Park at an approved dumping facility.

3.8 CLEANING

.1 Proceed in accordance with Section 01 74 11 – Cleaning.

.2 Upon completion of installation, remove surplus materials, rubbish, tools and equipment barriers.

END OF SECTION

Part 1 General

1.1 GENERAL

.1 This specification covers preparation of the area to be seeded, the supply and application of seed and fertilizer, and the finishing of seeded areas.

.2 Areas to be seeded shall include any disturbed or exposed earth surfaces within the limits if construction shown on the drawings. Any disturbed areas outside of theses limits will be seeded at the Contractor's expense.

Part 2 Products

2.1 SUPPLY OF MATERIALS

.1 Materials for seeding, including grass seed mix, fertilizer, mulch and water shall be supplied by the Contractor.

.2 Seed and fertilizer materials shall be stored dry and protected from direct sunlight and other detrimental conditions. Materials that have been subjected to detrimental conditions, as determined by Departmental Representative, will not be accepted for use on the project.

2.2 GRASS SEED

.1 Grass seed shall meet the minimum requirements for Common No. 1 Seed as defined by the Grade Tables under the Canada Seeds Act & Regulations, and shall be of the following composition:

Common Name	Percentage by Dry Weight
Creeping Red Fescue	40%
Perennial Ryegrass	20%
Kentucky Bluegrass	40%

.2 The seed shall be mixed by a conditioner and bulk storage facility approved by the Authority responsible for Canada Seeds Act & Regulations. All seed shall be tested by a Registered Seed Lab, and each bag shall be clearly marked with the name of the supplier and the mixture composition.

.3 Prior to the use on the project, the Contractor shall provide the Departmental Representative with a Certificate of Analysis for each lot of seed supplied. Test results from the Certificate of Seed Analysis shall specify the germination, or for native seeds that are not a part of the seed tables the Tetrazolium, and purity for each seed species of the mix as well as the seed mix composition expressed as a percentage of each seed species by dry mass for each seed mix specified.

2.3 HYDRO-MULCH

.1 Mulch material shall be cellulose fibre unless otherwise specified in the Special Provisions. Mulch shall be clean and free of weeds and other foreign matter. Mulch shall be 100% biodegradable, compatible with the environment, and shall contain no germination-inhibiting components.

2.4 TACKIFIER

.1 The binder must be capable of joining together the mulch particles to secure the mulch to the ground. The binder shall not form an impervious seal that will prevent the penetration of moisture to underlying soil.

2.5 WATER

.1 Water supplied by the Contractor shall be free of any impurities that might inhibit germination of the seed.

2.6 APPLICATION RATE

.1 The minimum application for Hydro-Seeding is 75-100 kg/ha

Part 3 Execution

3.1 NOTIFICATION OF COMMENCEMENT OF WORK

.1 The Contractor shall notify the Departmental Representative a minimum of 48 hours prior to any seeding work. Seeding operations shall not commence until all areas designated for seeding have been prepared to the satisfaction of the Departmental Representative.

.2 Seeding operations shall not commence until the Departmental Representative has reviewed the Certificate of Seed Analysis and verified the specified seed mixture supplied.

3.2 SURFACE PREPARATION

.1 Grading or topsoil placement shall be completed to the satisfaction of the Departmental Representative prior to any surface preparation.

.2 All eroded areas shall be corrected prior to surface preparation, as determined by the Departmental Representative, using imported material or material adjacent to the area being filled.

.3 Areas to be seeded shall be finished to a smooth and uniform surface, which is loosened to a depth of not less than 25 mm at the time of seeding. Where necessary, the surface shall be scarified and the Contractor shall dispose of stones and other debris as determined by the Departmental Representative.

.4 Seeding will not be permitted on hardened, crusted or rutted soil.

3.3 WEATHER CONDITIONS

.1 The Contractor shall not proceed with the Work when, in the opinion of the Departmental Representative, weather conditions are unsuitable. The Departmental Representative will

not allow work to proceed when wind conditions are such that material is being carried beyond the designated work areas or that the material is not being uniformly applied.

3.4 PROTECTION

.1 The Contractor shall take reasonable care to prevent the contamination of structures, signs, guardrails, fences, utilities and other installations by his operations. Where such contamination occurs, the Contractor shall remove the offending material using methods acceptable to the Departmental Representative.

.2 The Contractor shall ensure that hydro-seeding does not dislodge soil or cause erosion.

.3 The Contractor shall be responsible for the protection of the Work and shall, at his own expense, repair all areas damaged by any cause, until the Work has been accepted by the Departmental Representative.

3.5 RESEEDING

.1 At locations that fail to show a uniform stand of grass for any reason during the calendar year following the year of initial seeding, the Contractor shall repair the defective locations as determined by the Departmental Representative. A uniform stand of grass will be considered growth that shows no deterioration or bare spots greater than 1 square metre in size, and provides a minimum of 80 percent ground cover as determined by the Departmental Representative.

.2 The initial inspection of seeding will occur during the month of May of the calendar year following the year of initial seeding. The Contractor shall complete any required reseeding work prior to June 15 of that year. This date will be extended if, in the opinion of the Departmental Representative, the weather conditions prior to June 15 are not suitable for reseeding work.

.3 Contractor will not be required to reseed any area more than once during the warranty period.

.4 The Contractor shall supply all materials necessary for reseeding work and complete all reseeding work entirely at his own expense.

END OF SECTION

Part 1 General

1.1 ACTION AND INFORMATIONAL SUBMITTALS

.1 Submit in accordance with Section 01 33 00 - Submittal Procedures.

.2 For every one tree removed, three 3 tree plantings in kind will be planted.

1.2 DELIVERY, STORAGE AND HANDLING

.1 Deliver, store and handle materials in accordance with Section 01 61 00 - Common Product Requirements.

.2 Delivery and Acceptance Requirements: deliver materials to site in original factory packaging, labelled with manufacturer's name and address.

.1 Protect plant material from frost, excessive heat, wind and sun during delivery.

.2 Protect plant material from damage during transportation:

.1 Delivery distance is less than 30 km and vehicle travels at speeds under 80 km/h, tie tarpaulins around plants or over vehicle box.

.2 Delivery distance exceeds 30 km or vehicle travels at speeds over 80 km/h, use enclosed vehicle where practical.

.3 Protect foliage and root balls using anti-desiccants and tarpaulins, where use of enclosed vehicle is impractical due to size and weight of plant material.

.3 Storage and Handling Requirements:

.1 Immediately store and protect plant material which will not be installed within 1 hour in accordance with supplier's written recommendations and after arrival at site in storage location approved by Departmental Representative.

.2 Protect stored plant material from frost, wind and sun and as follows:

.1 For bare root plant material, preserve moisture around roots by heeling-in or burying roots in topsoil and watering to full depth of root zone.

.2 For pots and containers, maintain moisture level in containers.

.3 For balled and burlapped and wire basket root balls, place to protect branches from damage. Maintain moisture level in root zones.

.3 Store and manage hazardous materials in accordance with manufacturer's written instructions.

1.3 WARRANTY

.1 Contractor hereby warrants that plant material will remain free of defects in accordance with General Conditions CCDC GC 12.3, but for 1 full growing season.

.2 End-of-warranty inspection will be conducted by Departmental Representative.

.3 Departmental Representative reserves the right to extend Contractor's warranty responsibilities for an additional one year if, at end of initial warranty period, leaf development and growth is not sufficient to ensure future survival.

Part 2 Products

2.1 PLANT MATERIAL

.1 Plantings to be selected from the attached document entitled: TREES AND SHRUBS RECOMMENDED FOR WATERTON PARK TOWNSITE (Pages 6 -8 of this Section).

.2 Type of root preparation, sizing, grading and quality: comply to Canadian Standards for Nursery Stock.

.3 Plant material: free of disease, insects, defects or injuries and structurally sound with strong fibrous root system.

.4 Trees: with straight trunks, well and characteristically branched for species.

.5 Trees larger than 200 mm in caliper: half root pruned during each of two successive growing seasons, the latter at least one growing season before arrival on site.

.6 Bare root stock: nursery grown, in dormant stage, not balled and burlapped or container grown.

.7 Collected stock: maximum 40 mm in caliper, with well developed crowns and characteristically branched; no more than 40% of overall height may be free of branches.

.1 During collection, ensure 10% maximum seed crop (or plants) are collected from healthy population of many individuals, and from several plants of same species.

.2 Leave remainder for natural dispersal and as food for dependent organisms.

2.2 WATER

.1 Free of impurities that would inhibit plant growth.

2.3 STAKES

.1 Wood, pointed one end, 38 x 38 x 2300 mm.

2.4 GUYING COLLAR

.1 Tube: plastic, 13 mm diameter, nylon reinforced.

2.5 TRUNK PROTECTION

.1 Wire mesh: galvanized, electrically welded 1.4 mm wire with 25 x 25 mm mesh and fastener.

.2 Plastic: perforated spiralled strip.

2.6 FERTILIZER

.1 Synthetic commercial type as recommended by manufacturer.

Part 3 Execution

3.1 EXAMINATION

.1 Verification of Conditions: verify conditions of substrate previously installed under other Sections or Contracts are acceptable for planting installation in accordance with manufacturer's written instructions.

- .1 Visually inspect substrate in presence of Departmental Representative.
- .2 Inform Departmental Representative of unacceptable conditions immediately upon discovery.
- .3 Proceed with installation only after unacceptable conditions have been remedied.

3.2 PRE-PLANTING PREPARATION

.1 Proceed only after receipt of written acceptability of plant material from Departmental Representative.

.2 Remove damaged roots and branches from plant material.

.3 Locate and protect utility lines.

3.3 EXCAVATION AND PREPARATION OF PLANTING BEDS

.1 For individual planting holes:

- .1 Stake out location and obtain approval from Departmental Representative prior to excavating.
- .2 Excavate to depth and width as indicated.
- .3 Remove subsoil, rocks, roots, debris and toxic material from excavated material that will be used as planting soil for trees and individual shrubs. Dispose of excess material.
- .4 Scarify sides of planting hole.
- .5 Remove water which enters excavations prior to planting. Notify Departmental Representative if water source is ground water.

3.4 PLANTING

.1 For bare root stock, place 50 mm backfill soil in bottom of hole.

- .1 Plant trees and shrubs with roots placed straight out in hole.

.2 For jute burlapped root balls, cut away top one third of wrapping and wire basket without damaging root ball.

- .1 Do not pull burlap or rope from under root ball.

.3 For container stock or root balls in non-degradable wrapping, remove entire container or wrapping without damaging root ball.

.4 Plant vertically in locations as indicated.

- .1 Orient plant material to give best appearance in relation to structure, roads and walks.

.5 For trees and shrubs:

.1 Backfill soil in 150 mm lifts.

.1 Tamp each lift to eliminate air pockets.

.2 When two thirds of depth of planting pit has been backfilled, fill remaining space with water.

.3 After water has penetrated into soil, backfill to finish grade.

.2 Form watering saucer as indicated.

.6 For ground covers, backfill soil evenly to finish grade and tamp to eliminate air pockets.

.7 Water plant material thoroughly.

.8 After soil settlement has occurred, fill with soil to finish grade.

3.5 TRUNK PROTECTION

.1 Install trunk protection on deciduous trees as indicated.

.2 Install trunk protection before installation of tree supports.

3.6 TREE SUPPORTS

.1 Install tree supports as indicated.

.2 Use single stake tree support for deciduous trees less than 3 m in height and evergreens less than2 m in height.

.1 Place stake on prevailing wind side and 150 mm minimum from trunk.

.2 Drive stake 150 mm minimum into undisturbed soil beneath roots.

.1 Ensure stake is secure, vertical and unsplit.

.3 Install 150 mm long guying collar 1500 mm above grade.

.4 Thread Type 1 guying wire through guying collar tube.

.1 Twist wire to form collar and secure firmly to stake. Cut off excess wire.

.3 After tree supports have been installed, remove broken branches with clean, sharp tools.

3.7 MAINTENANCE DURING ESTABLISHMENT PERIOD

.1 Perform following maintenance operations from time of planting to acceptance by Departmental Representative.

.1 Water to maintain soil moisture conditions for optimum establishment, growth and health of plant material without causing erosion.

.1 For evergreen plant material, water thoroughly in late fall prior to freeze-up to saturate soil around root system.

.2 Keep trunk protection and guy wires in proper repair and adjustment.

.3 Remove and replace dead plants and plants not in healthy growing condition. Make replacements in same manner as specified for original plantings.

3.8 MAINTENANCE DURING WARRANTY PERIOD

.1 From time of acceptance by Departmental Representative to end of warranty period, perform following maintenance operations.

.1 Water to maintain soil moisture conditions for optimum growth and health of plant material without causing erosion.

.2 Apply fertilizer in early spring as indicated by soil test.

.3 Remove dead, broken or hazardous branches from plant material.

.4 Keep trunk protection and tree supports in proper repair and adjustment.

.5 Remove trunk protection, tree supports and level watering saucers at end of warranty period.

.6 Remove and replace dead plants and plants not in healthy growing condition. Make replacements in same manner as specified for original plantings.

.7 Submit monthly written reports to Departmental Representative identifying:

.1 Maintenance work carried out.

.2 Development and condition of plant material.

.3 Preventative or corrective measures required which are outside Contractor's responsibility.

3.9 CLEANING

.1 Progress Cleaning: clean in accordance with Section 01 74 11 – Cleaning.

.1 Work area clean at end of each day.

.2 Final Cleaning: upon completion remove surplus materials, rubbish, tools and equipment in accordance with Section 01 74 11 – Cleaning.

3.10 CLOSEOUT ACTIVITIES

.1 Submit maintenance reports for trees, shrubs, and other plantings.

TREES AND SHRUBS RECOMMENDED FOR WATERTON PARK TOWNSITE

The following is a condensed list of native tree and shrub species which are recommended for planting in the Waterton Townsite area. Species of trees and shrubs native to the Waterton area are the preferred species to be used when planting and should be sourced locally to prevent the introduction of non-native varieties. Where possible species have been selected to minimize the attraction to wildlife (bears, deer, elk) and have reduced fire risk potential. Species not found on this list must be approved by the Park Ecologist (Vegetation) or representative prior to planting.

TREES:

Coniferous:

Douglas fir (*Pseudotsuga menziesii*) – medium browse; medium fire
- Growing to 10 metres or more with a massive trunk and dense, spreading branches. Occurs at low elevations on dry exposed slopes and ridges.
- A primary species on disturbed sites, it occupies a variety of habitats from moist to very dry soils
- Adaptable to most sites; therefore good survival rate
- Good windthrow resistance; good shade tree
- Plant well away from eaves troughs (high needle cast)

White Spruce (*Picea glauca*) – Low browse; high fire
- Often somewhat bluish-green with a dense crown, up to 15 metres in height.
- Best on a moist site; needs a great deal of water, especially after transplanting
- Good shade tree; wind and shade tolerant.
- Colorado Spruce is not a desirable alternative; it's non-native

Lodgepole Pine (*Pinus contorta*) – low browse; high fire
- Occurs on a wide variety of soils, at low to middle elevations
- Young trees are intolerant of shade and grow best on dry exposed sites

Limber Pine (*Pinus flexilis)* – low browse; high fire
- Long-lived and slow growing
- A SARA listed species but plantings in town site can be used as educational material

Deciduous:

Trembling aspen (*Populus tremuloides*) – high browse; very low fire
- Rather small and more or less rounded leaves
- Mature trees form groves from root suckers.
- Require a moderately moist site
- NOTE – lots of hybrid and cultivar species available – these must not be used.

Balsam Poplar (*Populus balsamifera*) – high browse; very low fire
- Tall tree growing best along creek-beds and lakeshores (requires a moist site)
- Long, wide leaf-blades
- Sticky seed scales can be a nuisance; roots can surface

Paper Birch (*Betula papyrifera*) – low browse; very low fire
- A slender, long-branched tree – 10-25 m tall, mature bark mostly white; peeling
- Moist upland sites; shade intolerant
- Can withstand moderate drought once established

Water Birch (*Betula occidentalis*) – low browse; very low fire
- Smaller tree - <10m; dark-reddish brown bark that does not peel.
- Good early successional species in moist areas

SHRUBS:

Mountain Maple (*Acer glabrum*) – medium browse; very-low fire
- A red-stemmed shrub growing to a few metres tall. Typical "maple leaf" shaped leaf blades
- Will grow on rocky sites

Shrubby Cinquefoil (*Potentilla fruticosa*) – low browse; low fire

- A coarse shrub of grasslands and open places, decorated June to September with numerous small, yellow, rose-like flowers.
- NOTE – lots of hybrid and cultivar species available – these must not be used.

Red Osier Dogwood (*Cornus stolonifera*) - high browse; low fire
- Willow-like shrub with distinct red bark and small greenish-white flowers; 1 to 3 metres tall
- grows best in damp, somewhat sheltered places

Wolf Willow (*Elaeagnus commutata*) – medium browse; low fire
- Leaves silvery in colour; exhibits small yellow aromatic flowers in June/July
- Forms small groves in seepage areas
- NOTE – lots of hybrid and cultivar species available – these must not be used.

Snowberry (*Symphoricarpos albus*) – medium browse; low fire
- Common in a variety of habitats
- Small bell-shaped flowers June to August

Buffalo-berry (*Shepherdia canadensis*) – medium browse; low fire
- PLANT MALE BUSHES ONLY
- Spreading shrub to 3m tall

Common Wild Rose (*Rosa woodsii*) – medium browse; low fire
- Exhibits bright pink flowers in June and July
- Open woods and thickets, some tolerance to sandy areas

Prickly Rose (*Rosa accicularis*) – high browse; low fire
- Branching shrub, up to 1.5 metres high
- Open woods and moist thickets

Tree Standards:

- In cases of tree replacement, the three replacement trees should be as large as available, with a 15 gallon root size and at least ¾" trunk size. If 15 gallon native trees are not available, on approval of the SO, four 10 gallon trees may be planted instead.
- All trees must be guaranteed for one year (one growing season).
- Trees shall be inspected immediately after initial planting and during the growing season by a designated Parks Canada Surveillance Officer (SO). After the growing season, the SO will determine final acceptance of the tree.
- Any planted tree that is dead or, in the opinion of the SO, is in an unhealthy or unsightly condition, and/or has lost its natural shape due to dead branches, excessive pruning, inadequate or improper maintenance, or other causes prior to final acceptance, shall be replaced in the next planting season. There shall be a growing season guarantee on trees commencing after the final inspection of the permitted planting.
- Where dead trees are identified, the dead material shall be removed within four (4) weeks of notification. When necessary, approved soil and grass seed shall be added to the pit to reclaim the site and eliminate potential tripping hazards at the time of removal.

General Tips:
- Select the right tree for the site. It is important to match your planting site and its conditions with a tree species' shade, moisture, and soil preferences.
- Plants should be put in the ground in autumn or spring and fenced immediately to prevent animal damage.
- Frequent watering is necessary for the weeks following transplantation or first growing season, and if possible up to the first frost.
- It is advisable to screen young plants from wind over the winter.
- Avoid planting dense clusters of shrubs; this helps limit cover for large animals such as cougars and reduces fire hazards.
- Even "fire resistant" vegetation will burn if the plant's moisture content is low.
- To prevent the spread of non-native species and reduce the appeal of the townsite for animals such as deer and bear, please avoid planting the following:
    - Saskatoon (*Amelanchier alnifolia*) - berries attract bears

- Chokecherry (*Prunus virginiana*) - cherries can attract bears
- Pincherry (*Prunus pennsylvanica*) – cherries can attract bears
- Common Caragana (*Caragana arborescens*) - it's non-native and can crowd out other plants.
- Junipers – (*Juniperus communis* & *horizontalis*) – can be highly volatile in case of fire.

- Provide good pre-planting care. Keep trees shaded, cool, and moist before planting. Be gentle when handling the root mass.
- Remove burlap, pots, wire baskets, rope, plastic, etc. from the roots and all labels, wires etc. from the stem. Removing these materials with the root ball in the hole minimizes root system disturbance. If you can't remove burlap because the ball is loose, at least slit and peel it back below the soil surface.

For further information please contact the Park Ecologist (Vegetation) at 859-5137.
In cases of tree replacement, for further information please contact the Park Surveillance Officer at 859-5185.

END OF SECTION

Part 1 General

1.1 MEASUREMENT PROCEDURES

.1 Measure excavation and backfill in accordance with Section 31 23 33.01 - Excavating Trenching and Backfilling.

.2 Measure maintenance holes and catch basins in vertical meters installed, measured from top of cover (rim) or grating to lowest pipe invert of maintenance hole and catch basin as shown on the drawings

1.2 SCHEDULING OF WORK

.1 Schedule work to minimize interruptions to existing services and to maintain existing flow during construction.

.2 Submit Schedule of interruptions for approval and adhere to approved schedule.

1.3 SUBMITTALS

.1 Submit manufacturer's test data and certification at least 4 weeks prior to beginning Work. Include manufacturer's drawings, information and shop drawings where pertinent.

Part 2 Products

2.1 MATERIALS

.1 Precast maintenance hole units: to ASTM C 478M, circular or oval.

.1 Top sections eccentric cone or flat slab top type with opening offset for vertical ladder installation.

.2 Monolithic bases to be approved by Departmental Representative and set on concrete slabs cast in place].

.2 Precast catch basin sections: to ASTM C478M.

.3 Joints: made watertight using rubber rings, bituminous compound, epoxy resin cement or cement mortar.

.4 Mortar:

.1 Aggregate: CSA A82.56.

.2 Masonry Cement: to CAN/CSA-A3002.

.5 Ladder rungs: to CSA G30.18, No.25M billet steel deformed bars, hot dipped galvanized to ASTM A 123/A 123M.

.6 Rungs to be safety pattern (drop step type).

.7 Adjusting rings: to ASTM C 478M.

.8 Concrete Brick: to CAN/CSA-A165 Series.

.9 Drop maintenance hole pipe: same as sewer pipe.

.10 Galvanized iron sheet: approximately 2 mm thick.

.11 Steel gratings, I-beams and fasteners: as indicated.

.12 Frames, gratings, covers to dimensions as indicated and following requirements:

.1 Metal gratings and covers to bear evenly on frames.

.1 Frame with grating or cover to constitute one unit.

.2 Assemble and mark unit components before shipment.

.2 Gray iron castings: to ASTM A 48/A 48M, strength class[30B].

.3 Castings: coated with two applications of asphalt varnish, sand blasted or cleaned and ground to eliminate surface imperfections.

.4 Maintenance hole frames and covers: cover cast with perforations and complete with two 25 mm square lifting holes

.5 Catch basin frames and covers to City of Lethbridge standards.

.6 Maintenance holes frames and covers to City of Lethbridge standards.

.13 Granular bedding and backfill: in accordance with Section 31 05 16 - Aggregate Materials and following requirements:

.1 25mm washed drain rock

.2 Gradations to be within limits specified:

.3 Table:

Sieve Designation	% Passing
25mm	100
16mm	90-100
10mm	45-75
5mm	0-15
1.25mm	0-5

.4 Concrete mixes and materials: in accordance with Section 03 30 00.01 - Cast-in-Place Concrete.

.14 Unshrinkable fill: in accordance with Section 31 23 33.01 - Excavating, Trenching and Backfilling.

Part 3 Execution

3.1 EXAMINATION

.1 Verification of Conditions: verify that conditions of substrate previously installed under other Sections or Contracts are acceptable for maintenance holes and catch basin structures installation in accordance with manufacturer's written instructions.

.1 Visually inspect substrate in presence of Departmental Representative

.2 Inform Departmental Representative of unacceptable conditions immediately upon discovery.

.3 Proceed with installation only after unacceptable conditions have been remedied [and after receipt of written approval to proceed from Departmental Representative

3.2 EXCAVATION AND BACKFILL

.1 Excavate and backfill in accordance with Section 31 23 33.01 - Excavating Trenching and Backfilling and as indicated.

.2 Obtain approval of Departmental Representative before installing outfall structures, maintenance holes or catch basins.

3.3 CONCRETE WORK

.1 Use 25 MPa concrete in accordance with Section 03 30 00 - Cast-in-Place Concrete.

3.4 INSTALLATION

.1 Construct units in accordance with details indicated, plumb and true to alignment and grade.

.2 Complete units as pipe laying progresses.

.1 Maximum of 3 units behind point of pipe laying will be allowed.

.3 Dewater excavation to approval of Departmental Representative and remove soft and foreign material before placing concrete base.

.4 Cast bottom slabs directly on undisturbed ground.

.5 Set precast concrete base on 150 mm minimum of granular bedding compacted to 100% corrected maximum dry density; maximum density to ASTM D 698.

.6 Precast units:

.1 Set bottom section of precast unit in bed of cement mortar and bond to concrete slab or base.

.2 Make each successive joint watertight with Departmental Representative's approved rubber ring gaskets, bituminous compound, cement mortar, epoxy resin cement, or combination of these materials.

.3 Clean surplus mortar and joint compounds from interior surface of unit as work progresses.

.4 Plug lifting holes with precast concrete plugs set in cement mortar or mastic compound.

.7 For sewers:

.1 Place stub outlets and bulkheads at elevations and in positions indicated.

.2 Bench to provide smooth U-shaped channel.

.3 Side height of channel to be 0.75 times full diameter of sewer.

.4 Slope adjacent floor at 1 in 20.

.5 Curve channels smoothly.

.6 Slope invert to establish sewer grade.

.8 Compact granular backfill to 98% corrected maximum dry density; maximum density to ASTM D 698.

.9 Place frame and cover on top section to elevation as indicated.

.1 If adjustment required use concrete ring.

.10 Clean units of debris and foreign materials.

.1 Remove fins and sharp projections.

.2 Prevent debris from entering system.

3.5 LEAKAGE TEST

.1 Install watertight plugs or seals on inlets and outlets of each new sanitary sewer maintenance hole and fill maintenance hole with water.

.2 Leakage not to exceed 0.3% per hour of volume of maintenance hole.

.3 If permissible leakage is exceeded, correct defects.

.4 Repeat until approved by Departmental Representative.

.5 Departmental Representative will issue Test Certificate for each maintenance hole passing test.

END OF SECTION

Part 1 General

1.1 ACTION AND INFORMATIONAL SUBMITTALS

.1 Submit in accordance with Section 01 33 00 - Submittal Procedures.

.2 Inform Departmental Representative of proposed source of bedding materials and provide access for sampling at least 2 weeks prior to commencing work.

.3 Submit manufacturer's test data and certification that pipe materials meet requirements of this section 2 weeks minimum prior to beginning work. Include manufacturer's drawings, information and shop drawings where pertinent.

.4 Pipe certification to be on pipe.

1.2 CLOSEOUT SUBMITTALS

.1 Submit in accordance with Section 01 78 00 - Closeout Submittals.

.2 Submit data to produce record drawings, including directions for operating valves, list of equipment required to operate valves, details of pipe material, location of air and vacuum release valves, hydrant details.

.1 Include top of pipe, horizontal location of fittings and type, valves, valve boxes, valve chambers and hydrants.

.3 Operation and Maintenance Data: submit operation and maintenance data for pipe, valves, valve boxes, valve chambers and hydrants for incorporation into manual.

1.3 DELIVERY, STORAGE AND HANDLING

.1 Deliver, store and handle materials in accordance with Section 01 61 00 - Common Product Requirements and with manufacturer's written instructions.

1.4 SCHEDULING OF WORK

.1 Schedule Work to minimize interruptions to existing services.

.2 Submit schedule of expected interruptions for approval and adhere to interruption schedule as approved by Departmental Representative.

.3 Notify Departmental Representative minimum of 24 hours in advance of interruption in service.

.4 Do not interrupt water service for more than 2 hours and confine this period between 10:00 and 16:00 hours local time unless otherwise authorized.

.5 Notify fire department of planned or accidental interruption of water supply to hydrants.

.6 Provide and post "Out of Service" sign on hydrant not in use.

.7 Advise local police department of anticipated interference with movement of traffic.

Part 2 Products

2.1 PIPE, JOINTS AND FITTINGS

.1 Polyvinyl Chloride (PVC) Pressure Pipe

.1 For pipe sizes 150 mm to 300 mm in diameter, all pipes and joints shall be to the latest revision AWWA C900, CSA certified as meeting latest revision CSA 3-B137.3-M86, SDR 18, working pressure rating 235 psi.

.2 For pipe sizes350 mm to 900 mm in diameter, all pip and joints shall be to the latest revision AWWA C905, CSA certified as meeting latest revision CSA 3-B137.3-M86, SDR 25, working pressure rating 165 psi.

.3 All PVC pipe to be cast iron outside diameter, bell end, c/w SBR or NBR gaskets of a pressure actuated seal design.

.4 All PVC pipe to be capable of deflecting at a joint.

.5 All pipe shall be supplied with integral wall thickened bell ends and continuous gaskets.

.2 Polyvinyl Chloride (PVC) Fittings

.1 For main sizes 300 mm and smaller, PVC Fittings to the latest revision AWWA C-907, CSA certified as meeting latest revisions CSA 3-B137.2, SDR 18, pressure class 150, bell ends, c/w 1MPa elastomeric gasket push –on joint.

.2 For main sizes larger than 300mm, PVC Fittings to be latest revisions AWWA & CSA.

.3 Cast Iron Fittings

.1 Cast Iron Fittings to the latest revision AWWA C110-87 / ANSI A21.10, pressure class 150 minimum. Long body only. Exterior of fittings to be bituminous coated at factory.

.2 Joints for cast iron fittings to latest revision AWWA C111 / ANSI A21.11, pressure class 150 minimum, “Tyton Joint” or approved equal.

2.2 VALVES AND VALVE BOXES

.1 Gate Valves

.1 Valves sized 150 to 300 mm diameter shall be resilient wedge gate valves, conforming to latest revision AWWA C509, and c/w fully rubber encapsulated solid wedge, non-rising stem, suitable for direct bury.

.2 Valves to open counter clockwise (Turn left to open).

.3 Valve body to be constructed of cast iron, in accordance with ASTM A126, Class “B”. All nuts, bolts and washers to be stainless steel.

.4 Interior and exterior of valve to be epoxy coated, as per latest revision AWWA C550.

.5 Bronze valve stem to be operated by a 50 x 50 mm square operating nut. The valve stem (stuffing box) shall contain a double “O” ring seal.

.6 Valve ends to be push-on “Tyton Joint” conforming to latest revision of AWWA C111-85/ANSI A21.11.

2.3 SERVICE CONNECTIONS

.1 General

.1 For service connection sizes 20 mm to 50 mm diameter, pipe to be Copper Tubing, Municipex or IPEX Blue 904 Pex.

.2 For service connection sizes 100 mm to 300 mm diameter, pipe to be Polyvinyl Chloride (PVC) Pressure Pipe as specified in this Section.

.3 Fittings for service connection sizes 100 mm to 300 mm diameter to be as specified in this Section.

.4 Valves for service connection sizes 100 mm to 300 mm diameter to be as specified in this Section.

.2 Water Service Pipe

.1 For services 20 mm to 50 mm diameter, copper tubing conforming to latest revision ASTM B88M, type K, annealed.

.2 For services 20 mm to 50 mm diameter, cross-linked polyethylene pipe shall be manufactured in accordance with CSA B137.5 and ASTM F876 and shall comply with NSF 14. The pipe and resin (compound) shall be manufactured in an ISO 9001 certified production facility. The degree of cross linking for Municipex pipe shall not be less than 80% when tested in accordance to ASTM D2765 Method B. Municipex pipe shall have CSA / NSF approved pressure rating of:

160 psi @ 23 degree C / 73.4 degree F

100 psi @ 82 degree C / 180 degree F

80 psi @ 93 degree C / 200 degree F

The outside diameter of the pipe shall be copper tube size (CTS) and shall have a standard dimension ratio (SDR) 9.

The pipe shall carry the following marks every 5 feet minimum: manufacturers name, nominal size, ASTM, CSA 7 NSF designations, SDR, pressure/temperature rating, potable tubing, manufacturing date & Machine number and footage mark. The pipe shall have consecutive footage marks every 5 feet (minimum starting with 0 at the beginning of each coil). The pipe shall be shipped in protective cardboard boxes marked with the product name and size. When connecting Municipex or Blue 904 to main cocks and service valves, stainless steel inserts shall be used.

2.4 HYDRANTS

.1 Hydrants to be dry barrel, compression type, conforming to latest revision AWWA C502 designed for working pressure of 1,035 kPa (150 psi). Hydrants to close with pressure.

.2 The pumper and hoze nozzles shall be located a minimum of 460 mm above the ground flange. Nozzle threads to conform to the Alberta Mutual Aid Standard. No chains are required to secure the hydrant caps to the hydrant body. Nozzle sizes to be:

.1 Pumper Nozzle: 1-100 mm diameter

.2 Hose Nozzles: 2-65 mm diameter (at 90 degrees to pumper nozzle).

.3 Hydrant valve opening to be 133 mm. Both the valve seat and the valve body to be of bronze construction.

.4 Hydrant inlet to be 150 mm diameter push-on "Tyton Joint" c/w elastomeric gasket conforming to latest revision of AWWA C111 / ANSI A21.11.

.5 Hydrants shall be opened by turning the hydrant operating nut left (counter clockwise). The operating nut and nozzle caps to be three-sided, 38 mm on each side.

.6 Depth of bury to be 2.44 m (8').

.7 Hydrant branch to be 150 mm diameter PVC pipe conforming to this Section c/w 150 mm connection at main.

.8 Hydrant bodies and bonnets to be painted with exterior enamel. After installation, paint pumper and hose nozzle caps using exterior enamel in accordance with the following colour code:

.1 100 mm diameter - Red

.2 150 mm diameter - Yellow

.3 200 mm diameter and larger – Black

.9 Hydrants to be constructed with Break-a-way Flange, complete with a safety stem (spindle). Coupling is to be located at ground level.

.10 All nuts, bolts and washers to be stainless steel.

2.5 PIPE BEDDING ABD SURROUND MATERIAL

.1 Granular material to: Section 31 05 16 - Aggregate Materials and following requirements:

.1 25 mm minus washed drain rock.

Sieve Size	Percent Passing by Weight
25 000	100
16 000	90-100
10 000	45-75
5 000	0-15
1 250	0-5

.2 Gradations to be within limits specified when tested to ASTM C 136 and ASTM C 117. Sieve sizes to CAN/CGSB-8.1.

.2 Concrete mixes and materials required for bedding cradles, encasement, supports, thrust blocks: to Section 03 30 00 - Cast-in-Place Concrete.

2.6 BACKFILL MATERIAL

.1 As indicated. Type 3, in accordance with Section 31 23 33.01 - Excavating, Trenching and Backfilling.

2.7 PIPE DISINFECTION

.1 All new water mains shall be disinfected and flushed before being put into services in accordance with the latest edition of AWWA Standard C651 for Disinfecting Water Mains.

Part 3 Execution

3.1 PREPARATION

.1 Clean pipes, fittings, valves, hydrants, and appurtenances of accumulated debris and water before installation.

.1 Inspect materials for defects to approval of Departmental Representative.

.2 Remove defective materials from site .

3.2 TRENCHING

.1 Do trenching work in accordance with Section 31 23 33.01 - Excavating, Trenching and Backfilling.

.2 Ensure trench depth allows coverage over pipe of 3 m minimum from finished grade or as indicated.

.3 Trench alignment and depth require Departmental Representative's approval prior to placing bedding material and pipe.

3.3 CONCRETE BEDDING AND ENCASEMENT

.1 Do concrete work in accordance with Section 03 30 00 - Cast-in-Place Concrete.

.1 Place concrete to details as indicated.

.2 Pipe may be positioned on concrete blocks to facilitate placing of concrete. When necessary, rigidly anchor or weight pipe to prevent flotation when concrete is placed.

.3 Do not backfill over concrete within 24 hours after placing.

3.4 GRANULAR BEDDING

.1 Place granular bedding material in uniform layers not exceeding 150 mm compacted thickness to depth as indicated.

.2 Do not place material in frozen condition.

.3 Shape bed true to grade to provide continuous uniform bearing surface for pipe.

.4 Shape transverse depressions in bedding as required to suit joints.

.5 Compact each layer full width of bed to 98% minimum of corrected maximum dry density.

.6 Fill authorized or unauthorized excavation below design elevation of bottom of specified bedding in accordance with Section 31 23 33.01 - Excavating, Trenching and Backfilling.

3.5 PIPE INSTALLATION

.1 Lay pipes to ANSI/AWWA C600 ANSI/AWWA M-9 M-11and manufacturer's standard instructions and specifications.

.1 Do not use blocks except as specified.

.2 Join pipes in accordance with ANSI/AWWA C600 ANSI/AWWA C602 ANSI/AWWA C206 AWWA M-9 M-11 and manufacturer's recommendations.

.3 Bevel or taper ends of PVC pipe to match fittings.

.4 Handle pipe by methods approved by Departmental Representative and recommended by pipe manufacturer. Do not use chains or cables passed through pipe bore so that weight of pipe bears on pipe ends.

.5 Lay pipes on prepared bed, true to line and grade.

.1 Ensure barrel of each pipe is in contact with shaped bed throughout its full length.

.2 Take up and replace defective pipe.

.3 Correct pipe which is not in true alignment or grade or pipe which shows differential settlement after installation greater than 10 mm in 3 m.

.6 Face socket ends of pipe in direction of laying. For mains on grade of 2% or greater, face socket ends up-grade

.7 Do not exceed permissible deflection at joints as recommended by pipe manufacturer.

.8 Keep jointing materials and installed pipe free of dirt and water and other foreign materials.

.1 Whenever work is stopped, install a removable watertight bulkhead at open end of last pipe laid to prevent entry of foreign materials.

.9 Position and join pipes with equipment and methods approved by Departmental Representative.

.10 Cut pipes in approved manner as recommended by pipe manufacturer, without damaging pipe or its coating and to leave smooth end at right angles to axis of pipe.

.11 Align pipes before jointing.

.12 Install gaskets to manufacturer's recommendations. Support pipes with hand slings or crane as required to minimize lateral pressure on gasket and maintain concentricity until gasket is properly positioned.

.13 Avoid displacing gasket or contaminating with dirt or other foreign material.

.1 Remove disturbed or contaminated gaskets.

.2 Clean, lubricate and replace before jointing is attempted again.

.14 Complete each joint before laying next length of pipe.

.15 Minimize deflection after joint has been made.

.16 Apply sufficient pressure in making joints to ensure that joint is completed to manufacturer's recommendations.

.17 Ensure completed joints are restrained by compacting bedding material alongside and over installed pipes or as otherwise approved by Departmental Representative.

.18 When stoppage of work occurs, block pipes in an approved manner to prevent creep during down time.

.19 Recheck plastic pipe joints assembled above ground after placing in trench to ensure that no movement of joint has taken place.

.20 Do not lay pipe on frozen bedding.

.21 Do hydrostatic and leakage test and have results approved by Departmental Representative before surrounding and covering joints and fittings with granular material.

.22 Backfill remainder of trench.

3.6 VALVE INSTALLATION

.1 Install valves to manufacturer's recommendations at locations as indicated.

.2 Valves not to be supported by pipe.

.3 Install underground post-type indicator valves as indicated.

3.7 SERVICE CONNECTIONS

.1 Do not install service connections until satisfactory completion of hydrostatic and leakage tests of water main.

.2 Construct service connections at right angles to water main unless otherwise directed. Locate curb stops 300 mm inside roadway allowance.

.3 Tappings on PVC-C900 pipe, may be threaded without service clamps.

.1 Double strap service connections with galvanized malleable iron body and neoprene gasket cemented in place may be used.

.2 Tappings for PVC-C900 pipe to conform to following:

Pipe Diameter (mm)	Maximum Tap Without Clamp (mm)	Maximum Tap With Clamp (mm)
100	20	25
150	20	25
200	20	25

.4 Tappings on PVC pipe to be either PVC valve tees or bronze type service clamps, strap type with "O" ring seal cemented in place.

.5 Tappings for PE pipe: PE tapping tees or multi-saddle tees.

.6 Employ only competent workmen equipped with suitable tools to carry out tapping of mains, cutting and flaring of pipes.

.7 Install single and multiple tap service connections on top half of main, between 45 degrees and 90 degrees measured from apex of pipe.

.8 Install multiple corporation stops, 30 degrees apart around circumference of pipe and minimum of 300 mm apart along pipe.

.9 Tap main at 2:00 o'clock or 10:00 o'clock position only; not closer to joint nor closer to adjacent service connections than recommended by manufacturer, or 1 m minimum, whichever is greater.

.10 Leave corporation stop valves fully open.

.11 In order to relieve strain on connections, install service pipe in "Goose Neck" form "laid over" into horizontal position.

.12 Install rigid stainless steel liners in small diameter plastic pipes with compression fittings.

.13 Install curb stop with corporation box on services NPS 2 or less in diameter.

.1 Equip larger services with gate valve and cast iron box.

.2 Set box plumb over stop and adjust top flush with final grade elevation.

.3 Leave curb stop valves fully closed.

3.8 HYDRANTS

.1 Hydrants to be dry barrel, compression type, conforming to latest revision AWWA C502 designed for working pressure of 1,035 kPa (150 psi). Hydrants to close with pressure..

.2 Pumper and hose nozzles shall be located a minimum of 460 mm above ground flange. Nozzle threads to conform to Alberta Mutual Aid Standard.

.3 Hydrant valve opening to be 133 mm. Valve seat and valve body to be of bronze construction.

.4 Hydrant inlet to be 150 mm diameter push-on “Tyton Joint” c/a elastomeric gasket conforming to latest revision of AWWA C111 / ANSI A21.11.

.5 Hydrants shall be opened by turning hydrant operating nut left (counter clockwise). Operating nut and nozzle caps to be three-sided, 38 mm on each side.

.6 Depth of bury to be 2.44 m (8’).

.7 Hydrant branch to be 150 mm diameter PVC pipe conforming to this Section, c/w 150 mm connection at main.

.8 Hydrant bodies and bonnets to be painted with exterior enamel. After installation, paint pumper and hose nozzle caps using exterior enamel in accordance with following colour code:

Watermain Diameter	Colour
100 mm	Red
150 mm	Yellow
200 mm and larger	Black

.9 Hydrants to be constructed with break-a-way flange, c/w safety stem (spindle). Coupling is to be located at ground level.

.10 All nuts, bolts and washers to be stainless steel.

3.9 THRUST BLOCKS AND RESTRAINED JOINTS

.1 For thrust blocks: do concrete work in accordance with Section 03 30 00 – Cast-in-Place Concrete.

.2 Place concrete thrust blocks between valves, tees, plugs, caps, bends, changes in pipe diameter, reducers, hydrants and fittings and undisturbed ground.

.3 Keep joints and couplings free of concrete.

.4 Do not backfill over concrete within 24 hours after placing.

.5 For restrained joints: only use restrained joints approved by Departmental Representative.

3.10 HYDROSTATIC AND LEAKAGE TESTING

.1 Do tests in accordance with ANSI/AWWA C600.

.2 Provide labour, equipment and materials required to perform hydrostatic and leakage tests hereinafter described.

.3 Notify Departmental Representative at least 24 hours in advance of proposed tests.

.1 Perform tests in presence of Departmental Representative.

.4 Where section of system is provided with concrete thrust blocks, conduct tests at least 5 days after placing concrete or 2 days if high early strength concrete is used.

.5 Test pipeline in sections not exceeding 100 m in length, unless otherwise authorized by Departmental Representative.

.6 Upon completion of pipe laying and after Departmental Representative has inspected Work in place, surround and cover pipes between joints with approved granular material placed.

.7 Leave hydrants, valves, joints and fittings exposed.

.8 When testing is done during freezing weather, protect hydrants, valves, joints and fittings from freezing.

.9 Strut and brace caps, bends, tees, and valves, to prevent movement when test pressure is applied.

.10 Open Valves.

.11 Expel air from main by slowly filling main with potable water.

.1 Install corporation stops at high points in main where no air-vacuum release valves are installed.

.2 Remove stops after satisfactory completion of test and seal holes with plugs.

.12 Thoroughly examine exposed parts and correct for leakage as necessary.

.13 Apply hydrostatic test pressure based on elevation of lowest point in main and corrected to elevation of test gauge, for period of 1 hour.

.14 Examine exposed pipe, joints, fittings and appurtenances while system is under pressure.

.15 Remove joints, fittings and appurtenances found defective and replace with new sound material and make watertight.

.16 Repeat hydrostatic test until defects have been corrected.

.17 Apply leakage test pressure after complete backfilling of trench, based on elevation of lowest point in main and corrected to elevation of gauge, for period of 2 hours.

.18 Define leakage as amount of water supplied from water storage tank in order to maintain test pressure for 2 hours.

.19 Do not exceed allowable leakage of 0.03 L/mm of pipe, including lateral connections.

.20 Locate and repair defects if leakage is greater than amount specified.

.21 Repeat test until leakage is within specified allowance for full length of water main.

3.11 PIPE SURROUND

.1 Upon completion of pipe laying and after Departmental Representative has inspected Work in place, surround and cover pipes as indicated.

.2 Hand place surround material in uniform layers not exceeding 150 mm compacted thickness as indicated.

.1 Do not dump material within 0.6 m of pipe.

.3 Place layers uniformly and simultaneously on each side of pipe.

.4 Do not place material in frozen condition.

.5 Compact each layer from pipe invert to mid height of pipe to at least 98% of corrected maximum dry density.

.6 Compact each layer from mid height of pipe to underside of backfill to at least 98% of corrected maximum dry density.

3.12 BACKFILL

.1 Place backfill material, above pipe surround, in uniform layers not exceeding 150 mm compacted thickness up to grades as indicated.

.2 Do not place backfill in frozen condition.

.3 Under Paving and walks, compact backfill to at least 98% corrected maximum dry density.

.1 In other areas, compact to at least 98% corrected maximum dry density.

3.13 PIPE INSUULATION

.1 In areas where sufficient cover is not achieved, frost protection insulation will be required and installed as shown in the Standard Drawings. Separate payment for insulated area will be made in accordance with Sec 01 29 00.

3.14 HYDRANT FLOW TESTS

.1 Conduct flow tests on every hydrant to determine fire flows prior to painting hydrant caps and ports.

3.15 FLUSHING AND DISINFECTING

.1 Flushing and disinfecting operations: witnessed by Departmental Representative.

.1 Notify Departmental Representative at least 4 days in advance of proposed date when disinfecting operations will begin.

.2 Flush water mains through available outlets with a sufficient flow of potable water to produce velocity of 1.5 m/s, within pipe for minimum 10 minutes, or until foreign materials have been removed and flushed water is clear.

.3 Flushing flows as follows:

Pipe Size NPS	Flow (L/s) Minimum
6 and bleow	38
8	75
10	115
12	150

.4 Provide connections and pumps for flushing as required.

.5 Open and close valves, hydrants and service connections to ensure thorough flushing.

.6 When flushing has been completed to Departmental Representative approval, [introduce strong solution of chlorine as approved by Departmental Representative into water main and ensure that it is distributed throughout entire system.

.7 Disinfect water mains.

.8 Rate of chlorine application to be proportional to rate of water entering pipe.

.9 Chlorine application to be close to point of filling water main and to occur at same time.

.10 Operate valves, hydrants and appurtenances while main contains chlorine solution.

.11 Flush line to remove chlorine solution after 24 hours.

.12 Measure chlorine residuals at extreme end of pipe-line being tested.

.13 Perform bacteriological tests on water main, after chlorine solution has been flushed out.

.1 Take samples daily for minimum of 2 days.

.2 Should contamination remain or recur during this period, repeat disinfecting procedure.

.14 Take water samples at hydrants and service connections, in suitable sequence, to test for chlorine residual.

.15 After adequate chlorine residual not less than 50 ppm has been obtained leave system charged with chlorine solution for 24 hours.

.1 After 24 hours, take further samples to ensure that there is still not less than 10 ppm of chlorine residual remaining throughout system.

3.16 SURFACE RESTORATION

.1 After installing and backfilling over water mains, restore surface to original condition.

3.17 CLEANING

.1 Progress Cleaning: clean in accordance with Section 01 74 11 – Cleaning.

.1 Leave Work area clean at end of each day.

.2 Final Cleaning: upon completion remove surplus materials, rubbish, tools and equipment in accordance with Section 01 74 11 - Cleaning.

END OF SECTION

Part 1 General

1.1 ACTION AND INFORMATIONAL SUBMITTALS

.1 Submit in accordance with Section 01 33 00 - Submittal Procedures.

.2 Indicate on drawings proposed method for installing carrier pipe for undercrossings.

.3 Inform Departmental Representative at least 2 weeks prior to beginning Work, of proposed source of bedding materials and provide access for sampling.

.4 Certification to be marked on pipe.

.5 Submit manufacturer's test data and certification 2 weeks minimum before beginning Work.

1.2 DELIVERY, STORAGE AND HANDLING

.1 Deliver, store and handle materials in accordance with Section 01 61 00 - Common Product Requirements and with manufacturer's written instructions.

1.3 SCHEDULING OF WORK

.1 Schedule Work to minimize interruptions to existing services and maintain sewage flows during construction.

.2 Submit schedule of expected interruptions for approval and adhere to interruption schedule as approved by Departmental Representative.

.3 Notify Departmental Representative minimum of 24 hours in advance of interruption in service.

Part 2 Products

2.1 SMOOTH WALL POLYVINYL CHLORIDE (PVC) PIPE

.1 For pipe sizing 150 mm to 375 mm diameter, all pipe to be PVC gravity sewer pipe to latest revision ASTM D3034, SDR 35, CSA certified as meeting latest revision CSA B182.2-M, integral locked-in gasket bell and spigot system.

.2 For pipe sizing 450 mm to 900 mm diameter, all pipe to be PVC gravity sewer pipe to latest revision STM F679, SDR 35, CSA certified as meeting latest revision CSA B182.2-M, integral locked-in gasket bell and spigot systems.

.3 Polyethylene Pipe:

.1 Conform to CSA-B.137.1 and CGSB 41-GP-25M, PE 3408.

.2 Joint pipe using thermal butt fusion to AWWA C207.

.3 Fittings: 1) To be flanged to AWWA C207; 2) Fittings shall match the pipe supplied and shall be supplied by the manufacturer of the pipe or by suppliers approved by the pipe manufacturer; 3) All fittings to be compatible in materials and dimensions with the pipe.

.4 Tracer Wire to be an electric #14 AWG Solid SBC (1/64") polyethylene insulated wire or metal tape detectable to 3 m bury.

2.2 SERVICE CONNECTIONS

.1 Smooth Wall PolyVinyl Chloride (PVC) Pipe

.1 For PVC service connections 100 mm to 150 mm diameter, all pipe to be to latest revision ASTM D3034, CSA certified as meeting latest revision CSA B182.1-M, SDR 28, integral locked-in gasket bell and spigot joints.

.2 PolyVinyl Chloride (PVC) Fittings

.1 For PVC service connections 100 mm to 150 mm in diameter, all fittings to be to lastest revision ASTM D3034, CSA certified as meeting latest revision CSA B182.2-M, SDR 28, integral locked-in gasket bell and spigot joints.

.2 Connecting to Mains:

.1 PVC Tee Saddle c/w Rubber Gasket Joint: Saddles to be manufactured with integral centering ring of teeth to align saddle opening with hole in pipe. Saddle to be fastened to main by adjustable stainless steel straps. Screw mechanism on straps to be completely stainless steel.

.2 PVC Insert Type Fittings: Insert type fitting (“Inserta-Tee”) to be PVC PSM gasket joint stubs, c/w moulded rubber sleeve and adjustable stainless steel strap. Screw mechanism on straps to be completely stainless steel.

2.3 PIPE BEDDING AND SURROUND

.1 Granular material to Section 31 05 16 - Aggregate Materials and following requirements:

.1 25 mm minus washed drain rock.

.2 Gradations to be within limits specified when tested to ASTM C 136 and ASTM C 117.

.1 Sieve sizes to CAN/CGSB-8.1.

.2 Concrete mixes and materials for cradles, encasement, supports: to Section 03 30 00 - Cast-in-Place Concrete.

2.4 BACKFILL MATERIAL

.1 As indicated.

.2 Type 3, in accordance with Section 31 23 33.01 - Excavating, Trenching and Backfilling.

Part 3 Execution

3.1 PREPARATION

.1 Clean pipes and fittings of debris and water before installation, and remove defective materials from site to approval of Departmental Representative.

.2 Clean and dry pipes and fittings before installation.

.3 Obtain Departmental Representative's approval of pipes and fittings prior to installation.

3.2 TRENCHING

.1 Do trenching Work in accordance with Section 31 23 33.01 - Excavating, Trenching and Backfilling.

.2 Protect trench from contents of sewer or sewer connection.

.3 Trench alignment and depth require approval of Departmental Representative prior to placing bedding material and pipe.

3.3 GRANULAR BEDDING

.1 Place bedding in unfrozen condition.

.2 Place granular bedding materials in uniform layers not exceeding 150 mm compacted thickness to depth as indicated.

.3 Shape bed true to grade and to provide continuous, uniform bearing surface for pipe.

.1 Do not use blocks when bedding pipe.

.4 Shape transverse depressions as required to suit joints.

.5 Compact each layer full width of bed to at least 98% corrected maximum dry density.

.6 Fill excavation below bottom of specified bedding adjacent to manholes or structures with common backfill.

3.4 INSTALLATION

.1 Lay and join pipes to: ASTM C 12.

.2 Lay and join pipes in accordance with manufacturer's recommendations and to approval of Departmental Representative.

.3 Handle pipe using methods approved by Departmental Representative.

.1 Do not use chains or cables passed through rigid pipe bore so that weight of pipe bears upon pipe ends.

.4 Lay pipes on prepared bed, true to line and grade, with pipe invert smooth and free of sags or high points.

.1 Ensure barrel of each pipe is in contact with shaped bed throughout its full length.

.5 Begin laying at outlet and proceed in upstream direction with socket ends of pipe facing upgrade.

.6 Joint deflection permitted within limits recommended by pipe manufacturer.

.7 Water not to flow through pipe during construction, unless permitted by Departmental Representative.

.8 Whenever Work is suspended, install removable watertight bulkhead at open end of last pipe laid to prevent entry of foreign materials.

.9 Install plastic pipe and fittings in accordance with CSA B182.11.

.10 Pipe jointing:

.1 Install gaskets in accordance with manufacturer's written recommendations.

.2 Support pipes with hand slings or crane as required to minimize lateral pressure on gasket and maintain concentricity until gasket is properly positioned.

.3 Align pipes before joining.

.4 Maintain pipe joints free from mud, silt, gravel and foreign material.

.5 Avoid displacing gasket or contaminating with dirt or foreign material. Gaskets so disturbed to be removed, cleaned and lubricated and replaced before joining is attempted.

.6 Complete each joint before laying next length of pipe.

.7 Minimize joint deflection after joint has been made to avoid joint damage.

.8 At rigid structures, install pipe joints not more than 1.2 m from side of structure.

.9 Apply sufficient pressure in making joints to ensure that joint is complete as outlined in manufacturer's recommendations.

.11 When stoppage of Work occurs, block pipes to prevent creep during down time.

.12 Cut pipes as required for special inserts, fittings or closure pieces as recommended by pipe manufacturer, without damaging pipe or its coating and to leave smooth end at right angles to axis of pipe.

.13 Make watertight connections to manholes.

.1 Use shrinkage compensating grout when suitable gaskets are not available.

.14 Use prefabricated saddles or field connections approved by Departmental Representative, for connecting pipes to existing sewer pipes.

.1 Joints to be structurally sound and watertight.

3.5 CONCRETE THRUST BLOCKING

.1 All plugs, caps, tees, crosses, reducers, hydrants, valves, and bends (deflecting 11¼ degrees or more) shall be anchored to prevent movement. Suitable reaction blocking shall be used for this purpose.

.2 Blocking shall be placed between solid ground and the fitting to be anchored. The area of bearing on the pipe and on the ground in each instance shall be as determined by the Consultant. The blocking shall be so placed that the pipe and fitting joints will be accessible for repair. Typical thrust block locations are shown on the standard drawing.

3.6 PIPE SURROUND

.1 Place surround material in unfrozen condition.

.2 Upon completion of pipe laying, and after Departmental Representative has inspected pipe joints, surround and cover pipes as indicated.

.1 Leave joints and fittings exposed until field testing is completed.

.3 Hand place surround material in uniform layers not exceeding 150 mm compacted thickness as indicated.

.1 Do not dump material within 10 m of pipe.

.4 Place layers uniformly and simultaneously on each side of pipe.

.5 Compact each layer from pipe invert to mid height of pipe to at least 98% corrected maximum dry density.

.6 Compact each layer from mid height of pipe to underside of backfill to at least 90% corrected maximum dry density.

.7 When field test results are acceptable to Departmental Representative, place surround material at pipe joints.

3.7 BACKFILL

.1 Place backfill material in unfrozen condition.

.2 Place backfill material, above pipe surround in uniform layers not exceeding 150 mm compacted thickness up to grades as indicated.

.3 Under paving and walks, compact backfill to at least 98% corrected maximum dry density.

3.8 SERVICE CONNECTIONS

.1 Install pipe to CSA B182.11and manufacturer's instructions and specifications.

.2 Service connections to main sewer: Departmental Representative approved saddles.

.1 Do not use break-in and mortar patch-type joints.

.3 Service connection pipe: not to extend into interior of main sewer.

.4 Make up required horizontal and vertical bends from 45 degrees bends or less, separated by straight section of pipe with minimum length of 4 pipe diameters.

.1 Use long sweep bends where applicable.

.5 Plug service laterals with water tight caps or plugs as approved by Departmental Representative.

3.9 TRACE WIRE

.1 Tracer wire shall be installed simultaneously with the pipe on all mains and services. Splicing of the tracer wire can be done by soldering only. The connection shall be sealed with mastic and electrical tape. The Contractor shall be responsible for ensuring electrical continuity of the completed system.

.2 The tracer wire shall be brought above ground at every valve box riser, at every road crossing, at every facility location and at each end of every pipe section, It shall be brought above ground inside a rigid PVC conduit and looped inside a PVC junction box. The junction box shall be mounted to a marker post and be complete with a blank weatherproof cover. The wire shall be coiled inside these junction boxes. Rigid PVC conduit need only extend 1 m below grade at valve boxes and shall extend down to the waterline at all other locations.

.3 The tracer wire shall be installed on the top centreline of the pipe. Allowable tolerances will be a maximum of 25 mm clearance between the tracer wire and the pipe and 10o either side of the top of pipe. Tracer wire shall be attached to pipe in a manner acceptable to the Consultant.

3.10 MARKER POSTS

.1 Marker posts shall be installed at all valves and specials. Markers shall be 50 mm diameter steel posts painted blue.

3.11 WARNING SIGNS

.1 Warning signs and painted fence posts shall be installed at the edge of the road allowance where pipelines cross roadways and at the fence of every ¼ section line. The Contractor shall install warning signs as per detail drawings.

.2 Pipeline signs shall be 406 mm x 305 mm warning signs printed on 3M 3650 or 3690 Scotchicl in black ink. Mounted on 12 gauge high tensile aluminum (0.61) sign sheet. Sign holes to be drilled 11 m (7/16") on 35 mm (14") centres.

.3 Pipeline warning posts shall be 2.7 metres in length, hat section, galvanized sign post punched and complete with hardware recommended for pipeline crossing signs.

3.12 CLEANING

.1 Progress Cleaning: clean in accordance with Section 01 74 11 – Cleaning.

a) Leave Work area clean at end of each day.

.2 Final Cleaning: upon completion remove surplus materials, rubbish, tools and equipment in accordance with Section 01 74 11 – Cleaning.

Part 4 Field Testing

4.1 GRAVITY SEWERS

.1 Repair or replace pipe, pipe joint or bedding found defective.

.2 Remove foreign material from sewers and related appurtenances by flushing with water.

.3 Perform infiltration and exfiltration testing as soon as practicable after jointing and bedding are complete, and service connections have been installed.

.4 Do infiltration and exfiltration test to ASTM C 828.

.5 Do infiltration and exfiltration testing as specified herein.

.1 Perform tests in presence of Departmental Representative.

.2 Notify Departmental Representative 24 hours minimum in advance of proposed tests.

.6 Carry out tests on each section of sewer between successive manholes including service connections.

.7 Install watertight bulkheads in suitable manner to isolate test section from rest of pipeline.

.8 Exfiltration test:

.1 Fill test section with water to displace air in line. Maintain under nominal head for 24 hours to ensure absorption in pipe wall is complete before test measurements are begun.

.2 Immediately prior to test period add water to pipeline until there is head of 1 m over interior crown of pipe measured at highest point of test section or water in manhole is 1 m above static ground water level, whichever is greater.

.3 Duration of exfiltration test: 2 hours.

.4 Water loss at end of test period: not to exceed maximum allowable exfiltration over any section of pipe between manholes.

.9 Infiltration test:

.1 Conduct infiltration test in lieu of exfiltration test where static ground water level is 750 mm or more above top of pipe measured at highest point in line to be used.

.2 Do not interpolate a head greater than 750 mm to obtain an increase in allowable infiltration rate.

.3 Install watertight plug at upstream end of pipeline test section.

.4 Discontinue pumping operations for at least 3 days before test measurements are to begin and during this time, keep thoroughly wet at least one third of pipe invert perimeter.

.5 Prevent damage to pipe and bedding material due to flotation and erosion.

.6 Place 90 degrees V-notch weir, or other measuring device approved by Departmental Representative in invert of sewer at each manhole.

.7 Measure rate of flow over minimum of 1 hour, with recorded flows for each 5 min interval.

.10 Infiltration and exfiltration: not to exceed following limits in L per hour per 100 m of pipe, including service connections.

Nominal Pipe Diameter in mm	Asbestos-Cement or Plastic Pipe	Concrete or Vitrified Clay Pipe
100	3.88	25.5
125	4.62	30.0
150	5.51	34.0
200	7.45	41.5
250	9.39	49.5
300	11.33	56.5
350	13.27	63.5
400	14.91	70.0
450	16.84	76.0
500	18.78	81.5
550	20.72	87.0
600	22.80	92.5
700	26.53	102.0
800	30.11	110.5
900	33.69	118.0
1000	37.56	124.5
1100	41.29	130.0
1200	45.01	135.0

.11 Leakage: not to exceed following limits in litres per hour per mm of diameter per 100 m of sewer including service connections:

.1 Exfiltration, based on 600 mm head: 0.175 L.

.2 Infiltration: 0.150 L.

.12 Repair and retest sewer line as required, until test results are within limits specified.

.13 Repair visible leaks regardless of test results.

.14 Television and photographic inspections:

.1 Carry out inspection of installed sewers by video camera, digital camera or by other related means.

4.2 HDPE FORCE MAINS

.1 Before acceptance of the work, the entire system shall be subjected to a hydrostatic pressure test in the presence of the Consultant. Notify Consultant at least 48 hours in advance of all proposed tests. The Contractor shall provide all necessary labour, materials and equipment for the test including a suitable pump, measuring tank, pressure hoses, connections, plugs, caps, gauges and all other apparatus necessary for filling the main, pumping to the required test pressure and recording the pressure and leakage losses. The Contractor shall provide evidence that the gauges used are accurate.

.2 When the line has been filled and most of the air expelled, time should be allowed for the remaining air and water to reach a constant temperature.

.3 No test shall be applied until at least 7 days after the concrete thrust reaction block has been cast and plugged ends securely braced. In the case of high early strength concrete, allow a minimum of 3 days.

.4 The test section may be pressured through a hydrant or a tap may be installed in the line. After testing the pipe, the tap shall be plugged at the Contractor's expense.

.5 Fill the force main at a velocity of less than 0.6 m/s.

.6 Each section between valves shall be brought to test pressure with the valves closed, to test the valves under pressure. Test pressure shall be held without loss for two (2) minutes before opening the valve and releasing the pressure into the next section.

.7 Mark the gauge and the level of water in the storage barrel at the beginning of the test.

.8 Maintain the test pressure within + 20 kPa of the specified test pressure for the duration of the test. Pump the test section back to the test pressure at the end of the first 30 minutes. If the allowable leakage is exceeded, air may be trapped. Remove trapped air and repeat the test.

.9 The test procedure consists of two steps. The initial expansion phase and the test period. In order to accommodate the initial expansion of the main under test, the following shall be done:

a) Fill the line with water and pressurize to 1.5 times the Standard Pressure Rating of the main. All air shall be expelled from the line during filling of the test section.

b) Add sufficient make-up water to the main at hourly intervals to return the main to the test pressure. The initial expansion shall be done for a 3 hour period so the main shall be repressurized 3 times during this phase.

c) After the third repressurization, the test period shall begin. No make-up water shall be added to the main until the end of the test period which shall be 1 to 3 hours long. At the end of the 3 hours, a measured quantity of make-up water shall be added to the main to repressurize it to the test pressure. The amount of make-up water shall not exceed the volume allowance for expansion given below

d) Allowance for expansion under test pressure in litres for each 100 metre of pipe at 23ºC.

Nominal Pipe Diameter in mm	1 Hour Test	2 Hour Test	3 Hour Test
75	1.2	1.9	3.1
100	1.6	3.1	5.0
150	3.7	7.5	11.2
200	6.2	12.5	18.7
250	8.7	16.2	26.2
300	13.7	28.7	42.4
350	17.4	33.7	52.4

e) The amount of make-up water shown in the table above should be multiplied by the appropriate correction factor taken from below for the pipe temperature at the time of testing:

Temperature (ºC)	Correction Factor
0	0.22
2	0.24
4	0.28
6	0.32
8	0.36
10	0.42
12	0.47
14	0.53
16	0.59
18	0.66
20	0.74
22	0.87
23	1.00
24	1.20

Under no circumstances should the total time under test exceed eight (8) hours at 1.5 times the pressure rating. If the test is not completed due to leakage, equipment failure or any other reason within this time period, the test section shall be permitted to “relax” for an additional eight hour period prior to starting the next testing sequence.

.10 If the test fails any section of the water main, the Contractor shall locate and repair the leaks at no extra cost. After such repairs, retesting of the repaired sections shall be conducted.

.11 Where connections are made to existing water mains, the pressure used to test sections of new mains which cannot be isolated from the existing mains shall be specified by the Consultant, or the leakage test may be waived by the Consultant. This shall not relieve the Contractor from his obligation to repair leaks or replace defective material.

.12 It is the responsibility of the Contractor to ensure that normal safety precautions are observed for hydrostatic pressure tests.

.13 Flush and clean out pipes after pressure tests.

a) Remove stops after satisfactory completion of test and seal holes with plugs, make repairs to insulation and external protective jacket as required.

b) Dispose of flushing water in a manner acceptable to the Consultant.

.14 Maintenance: If leaks develop in the work before the expiry of the maintenance period, the Contractor shall make the necessary repairs. The leaks shall be deemed repaired when the leakage is less than the allowable amount specified.

.15 Damages: Water introduced into the force mains by the Contractor shall be at his own risk. All damage to the pipe from freezing or other causes shall be repairs by the Contractor at his own expense

END OF SECTION

Part 1 General

1.1 DESCRIPTION

.1 This section addresses the procedures to be employed for replacing existing water and sanitary force mains crossing Cameron Creek by pipe bursting as identified on the drawings, and replacing with new high density polyethylene pipe (HDPE) pipe.

1.2 RELATED SECTIONS

.1 Section 331116 – Site Water Utility Distribution Piping

.2 Section 333113 – Public Sanitary Utility Sewage Piping

1.3 REFERENCES

.1 International Pipe Bursting Association – Guideline Specification for the replacement of Mainline Sewer Pipes by Pipe Bursting

.2 International Pipe Bursting Association – Guideline for Pipe Bursting

.3 USPEA - State of Technology for Rehabilitation of Water Distribution Systems

.4 USEPA – Quality Assurance and Quality Control Practices for Rehabilitation of Sewer and Water Mains

1.4 QUALIFICATIONS

.1 The contractor shall be trained to operate pipe bursting equipment and systems. The contractor shall provide proof of training and proficiency in the use of the equipment. Only the contractor's trained employees shall operate the equipment.

.2 The contractor shall be trained by the respective manufacturer of the pipe bursting equipment in the use of that machinery. The contractor shall provide certification from the manufacturer that the contractor has been trained and is proficient in the use of the equipment. Only the contractor's employees trained and certified by the manufacturer shall be allowed to operate the equipment during the project.

.3 The contractor must have successfully completed 1,000m of pipe bursting which includes one successful static pipe bursting project. Contractor shall submit a list of these projects including the owner, engineer, addresses, phone numbers and dates that said projects were completed with their proposal. Or, the contractor shall submit with bid documents proof that they will use manufactures equipment and technical support for project start up.

1.5 EQUIPMENT

.1 Pipe bursting tool shall be static and hydraulically operated. The bursting action of the tool shall increase the external dimensions sufficiently, causing pitting and breakage of the pipe at the same time expanding the surrounding ground. This action shall not only break the pipe, but also create the temporary void into which the burster can be statically pulled which enables forward progress to be made. Simultaneously, the new polyethylene pipe, directly attached to the expander, shall also move forward.

.2 The static pulling frame shall be telescopic in design to allow the cutting head to release at the termination of the pull. This also provides minimal trench length by telescopic adjustment.

.3 Quick lock bursting rods are required to guarantee snap lock connections. Quick Lock rods also stabilize cutting wheels at a 90º plane to invert pipe. Threaded bursting rods are not allowed. This insures the same cutting location eliminating threaded rod failures and turning of rods which effect cutting ability of blades.

.4 The unit must maintain automatic thrust and pull back.

.5 The static unit is capable of pipe bursting in two directions from the same excavation.

1.6 SUBMITTALS

.1 Submit manufacturer's specific technical data with complete information on physical properties of pipe and pipe dimensions pertinent to this job. A certificate of "Compliance with Specification" or suitable alternative shall be furnished for all materials to be supplied.

.2 Complete calculations including lists of parameters, all formulas and all other data showing the design of the new pipe.

.3 Detail drawings and written descriptions of the entire construction procedure to install pipe, bypass sewage flow, pit sizes, pit construction and shoring, dewatering and sewer service reconnections.

Part 2 Products

2.1 Products Specifications

.1 High Density Polyethylene Pipe shall be AWWA C906 (HDPE).

.2 Pipe must conform to ASTM F714 and NSF 61.

.3 HDPE resin shall be PE3408 characterized by ASTM D3350.

.4 All pipes shall be made of virgin material, not reworked except that obtained from manufacturer’s own production.

.5 Dimension Ratios: The minimum wall thickness of the polyethylene pipe (PE) shall meet Minimum 11 SDR of Pipe.

.6 Cuts or gouges, per ASTM F585 are acceptable up to 10% of wall thickness. Beyond 10% of wall, damage must be removed by cutting the damaged section from the pipe string and butt fusing the ends.

.7 Stripe along the length of the pipe shall be blue in color to identify the pipe as potable water.

.8 Pipe connection fittings shall meet AWWA C906 and meet or exceed the pressure requirements of the HDPE pipe.

2.2 Product Handling

.1 Pipe transport and handling shall be per manufacturer’s recommendation.

.2 Product other than pipe must be stored and handled per manufacturer's recommendations.

2.3 Documentation and Planning

.1 Contractor shall submit a plan to the city or town on a marked-up copy of the project drawings showing the contractor's construction phasing and plans at the pre-construction meeting. Plan details should include:

a. Pit locations for pipe insertion and burst machine location;

b. Pit locations for service reconnects;

c. Schedule of when various sections are to be rehabilitated;

d. Distances of each pull;

e. Isolating points used to seal the system during the pipe burst;

Part 3 Execution

3.1 SAFETY

.1 Submit manufacturer's specific technical data with complete information on physical properties of pipe and pipe dimensions pertinent to this job. A certificate of "Compliance with Specification" or suitable alternative shall be furnished for all materials to be supplied.

.2 The contractor shall carry out operations in strict accordance with all applicable OSHA Standards. Particular attention is drawn to those safety requirements involving work entry into confined spaces. It shall be the contractor's responsibility to familiarize and its employees with OSHA Standards and regulations pertaining to all aspects of the work.

3.2 INSERTION AND RECEIVING EXCAVATIONS

.1 The location and number of insertion and receiving excavations shall be planned by the contractor and submitted in writing for approval by the Departmental Representative 10 days (or as determined by the Engineer) prior to excavation.

.2 Burst pit and insertion pit locations shall be placed such that excavations are minimized. This may be accomplished by placing either or both of these pits at the point of a service connection.

.3 Before excavation is begun, it will be the responsibility of the contractor to check with the various utility companies and determine the location of existing utilities in the vicinity of the work area. The contractor at no cost to the City, if required, will arrange temporary construction easement and/or right-of-way areas.

.4 Damage to utilities and the resulting repair, temporary service cost, etc., shall be borne by the contractor. Access pits shall be backfilled in accordance with the appropriate specifications.

.5 All excavations shall be properly sheeted/shored in accordance with relevant specifications for trench safety systems. Any damage resulting from improperly shored excavations shall be corrected to the satisfaction of the Departmental Representative with no compensation due to the contractor.

.6 All open excavations shall be kept secure at all times by the use of barricades with appropriate lights and signs, construction tape, covering with steel plates, etc.

.7 One or more receiving pits shall be excavated at the end(s) of the sewer pipe to be replaced or at appropriate points within the length of the existing pipe. Pit shall be centered over the existing pipe.

.8 The number of pits for machine and pipe insertion shall be the minimum necessary to most efficiently accomplish the work. The contractor shall give consideration to the use of excavation required for other purposes such as for sanitary sewer service reconnections and manhole replacement.

.9 Where manholes are used as machine or new pipe insertion pits, the contractor shall identify such manholes and replace them at no additional cost to the City if damaged. Any manhole modification or replacement required shall be considered incidental to the installation of the new pipe.

.10 The cost of diversion pumping around a manhole or insertion pit, if required, from a manhole upstream to a manhole downstream, shall be incidental to the installation of the new pipe.

3.3 Joining of Pipe

.1 Fusing per butt fusion methods in strict conformance to the pipe and/or fusing equipment manufacturer's recommendations shall be used to join sections of HDPE pipe.

.2 Fusing of 'sticks' of pipe shall be performed in the general vicinity of the pipe insertion pit or laydown yard (staging area).

.3 Pipe supplied by the pipe manufacturer in a coil may be fused remote from the pipe insertion pit.

3.4 Hydrostatic Testing

.1 See Section 331116 – Site Water Utility Distribution Piping.

3.5 Disinfection

.1 See Section 331116 – Site Water Utility Distribution Piping.

END OF SECTION

Part 1 General

1.1 SCHEDULING

.1 Schedule Work to minimize interruptions to existing services and to maintain existing flow during construction.

.2 Submit schedule of expected interruptions for approval and adhere to approved schedule.

1.2 ACTION AND INFORMATIONAL SUBMITTALS

.1 Submit in accordance with Section 01 33 00 - Submittal Procedures.

1.3 DELIVERY, STORAGE AND HANDLING

.1 Deliver, store and handle materials in accordance with manufacturer's written instructions.

.2 Storage and Handling Requirements:

.1 Store materials in accordance with manufacturer's recommendations.

.2 Store and protect pipes from damage.

.3 Replace defective or damaged materials with new.

Part 2 Products

2.1 SMOOTH WALL POLYVINYL CHLORIDE (PVC) PIPE

.1 For pipe sizing 200 to 375 mm diameter, all pipe to be PVC gravity sewer pipe to latest revision ASTM D3034, SDR 35, CSA certified as meeting latest revision CSA B182.2-M, c/w integral locked-in gasket bell and spigot systems.

.2 For pipe sizing 450 to 1050 mm diameter, all pipe to be PVC gravity sewer pipe to latest revision ASTM F679, SDR 35, CSA certified as meeting latest revision CSA B182.2-M, c/w integral locked-in gasket bell and spigot systems .

2.2 PIPE BEDDING AND SURROUND MATERIAL

.1 Granular material in accordance with Section 31 05 16 - Aggregate Materials and following requirements.

.1 25 mm minus washed drain rock.

.2 Gradations to be within limits specified when tested to ASTM C 136 and ASTM C 117. Sieve sizes to CAN/CGSB-8.2.

.2 Concrete mixes and materials for bedding, cradles, encasement, supports: in accordance with Section 03 30 00 - Cast-in-Place Concrete.

2.3 BACKFILL MATERIAL

.1 As indicated.

.2 Type 3 in accordance with Section 31 23 33.01 - Excavating, Trenching and Backfilling.

Part 3 Execution

3.1 PREPARATION

.1 Clean pipes and fittings of debris and water before installation, and remove defective materials from site to approval of Departmental Representative.

3.2 TRENCHING

.1 Do trenching Work in accordance with Section 31 23 33.01 - Excavating, Trenching and Backfilling.

.2 Protect trench from contents of sewer.

.3 Trench alignment and depth to approval of Departmental Representative prior to placing bedding material and pipe.

3.3 GRANULAR BEDDING

.1 Place bedding in unfrozen condition.

.2 Place granular bedding material in uniform layers not exceeding 150 mm compacted thickness to depth as indicated.

.3 Shape bed true to grade and to provide continuous, uniform bearing surface for pipe.

.1 Do not use blocks when bedding pipes.

.4 Shape transverse depressions as required to suit joints.

.5 Compact each layer full width of bed to at least 98% corrected maximum dry density.

.6 Fill excavation below bottom of specified bedding adjacent to manholes or catch basins with compacted common backfill.

3.4 INSTALLATION

.1 Lay and join pipes to: ASTM C 12.

.2 Lay and join pipe in accordance with manufacturer's recommendations and to approval of Departmental Representative.

.3 Handle pipe using methods approved by Departmental Representative.

.1 Do not use chains or cables passed through rigid pipe bore so that weight of pipe bears upon pipe ends.

.4 Lay pipes on prepared bed, true to line and grade with pipe inverts smooth and free of sags or high points.

.1 Ensure barrel of each pipe is in contact with shaped bed throughout its full length.

.5 Begin laying at outlet and proceed in upstream direction with socket ends of pipe facing upgrade.

.6 Joint deflection not to exceed limits recommended by pipe manufacturer.

.7 Water not to flow through pipes during construction unless permitted by Departmental Representative.

.8 Whenever Work is suspended, install removable watertight bulkhead at open end of last pipe laid to prevent entry of foreign materials.

.9 Install plastic pipe and fittings in accordance with CAN/CSA-B1800.

.10 When any stoppage of Work occurs, restrain pipes, to prevent "creep" during down time.

.11 Cut pipes as required for special inserts, fittings or closure pieces, as recommended by pipe manufacturer, without damaging pipe or its coating and to leave smooth end at right angles to axis of pipe.

.12 Make watertight connections to manholes and catch basins.

.1 Use shrinkage compensating grout when suitable gaskets are not available.

.13 Use prefabricated saddles or approved field connections for connecting pipes to existing sewer pipes.

.1 Joint to be structurally sound and watertight.

.14 Temporarily plug open upstream ends of pipes with removable watertight concrete, steel or plastic bulkheads.

3.5 PIPE SURROUND

.1 Place surround material in unfrozen condition.

.2 Upon completion of pipe laying, and after Departmental Representative has inspected pipe joints, surround and cover pipes as indicated.

.1 Leave joints and fittings exposed until field testing is completed.

.3 Hand place surround material in uniform layers not exceeding 150 mm compacted thickness as indicated.

.1 Do not dump material within 10 m of pipe.

.4 Place layers uniformly and simultaneously on each side of pipe.

.5 Compact each layer from pipe invert to mid height of pipe to at least 98% corrected maximum dry density.

.6 Compact each layer from mid height of pipe to underside of backfill to at least 98 % corrected maximum dry density.

.7 When field test results are acceptable to Departmental Representative, place surround material at pipe joints.

3.6 BACKFILL

.1 Place backfill material in unfrozen condition.

.2 Place backfill material, above pipe surround, in uniform layers not exceeding 150 mm compacted thickness up to grades as indicated.

.3 Under paving and walks, compact backfill to at least 100 % corrected maximum dry density. In other areas, compact backfill to at least 98 % corrected maximum dry density.

3.7 FIELD TESTS AND INSPECTIONS

.1 Repair or replace pipe, pipe joint or bedding found defective.

.2 Remove foreign material from sewers and related appurtenances by flushing with water.

.3 Television and photographic inspections:

.1 Carry out inspection of installed sewers by television camera, photographic camera or by other related means.

3.8 CLEANING

.1 Progress Cleaning: clean in accordance with Section 01 74 11 – Cleaning.

.1 Leave Work area clean at end of each day.

.2 Final Cleaning: upon completion remove surplus materials, rubbish, tools and equipment in accordance with Section 01 74 11 – Cleaning.

END OF SECTION

Part 1 General

1.1 ACTION AND INFORMATIONAL SUBMITTALS

.1 Submit in accordance with Section 01 33 00 - Submittal Procedures.

1.2 DELIVERY, STORAGE AND HANDLING

.1 Deliver, store and handle materials in accordance with manufacturer's written instructions.

.2 Storage and Handling Requirements:

.1 Store materials in accordance with manufacturer's recommendations.

.2 Store and protect conduits from damage.

.3 Replace defective or damaged materials with new.

Part 2 Products

2.1 CONDUIT MATERIALS

.1 Road Crossing Conduit:

.1 100mm RPVC, Belled End conforming to CSA C22.2 No. 211.2.

.2 Fiber Optic Conduit:

.1 50mm SDR 11 Smoothwall Innerduct HDPE Orange Conduit

2.2 BACKFILL MATERIAL

.1 As indicated.

.2 Type 3 in accordance with Section 31 23 33.01 - Excavating, Trenching and Backfilling.

Part 3 Execution

3.1 PREPARATION

.1 Clean conduits and fittings of debris and water before installation, and remove defective materials from site to approval of Departmental Representative.

3.2 TRENCHING

.1 Do trenching Work in accordance with Section 31 23 33.01 - Excavating, Trenching and Backfilling.

.2 Trench alignment and depth to approval of Departmental Representative prior to placing bedding material and conduit. Trench depth to be minimum 0.75m to top of conduit.

3.3 INSTALLATION

.1 Handle, lay and join conduit to manufacturer’s specifications.

.2 Lay conduits on prepared bed, true to line and grade with conduit inverts smooth and free of sags or high points.

.1 Ensure barrel of each conduit is in contact with shaped bed throughout its full length.

.3 Joint deflection not to exceed limits recommended by conduit manufacturer.

.4 Whenever Work is suspended, install removable watertight bulkhead at open end of last conduit laid to prevent entry of foreign materials.

.5 Red warning tape shall be placed at least 0.300m above buried conduit.

3.4 CONDUIT SURROUND

.1 Place surround material in unfrozen condition.

.2 Upon completion of conduit laying, and after Departmental Representative has inspected conduit joints, surround and cover conduits as indicated.

.3 Hand place surround material in uniform layers not exceeding 150 mm compacted thickness as indicated.

.4 Compact each layer from conduit invert to mid height of conduit to at least 98% corrected maximum dry density.

3.5 BACKFILL

.1 Place backfill material in unfrozen condition.

.2 Place backfill material, above conduit surround, in uniform layers not exceeding 150 mm compacted thickness up to grades as indicated.

.3 Under paving and walks, compact backfill to at least 100 % corrected maximum dry density. In other areas, compact backfill to at least 98 % corrected maximum dry density.

3.6 FIELD TESTS AND INSPECTIONS

.1 Repair or replace conduit, conduit joint or bedding found defective.

3.7 CLEANING

.1 Progress Cleaning: clean in accordance with Section 01 74 11 – Cleaning.

.1 Leave Work area clean at end of each day.

.2 Final Cleaning: upon completion remove surplus materials, rubbish, tools and equipment in accordance with Section 01 74 11 – Cleaning.

END OF SECTION

Parks Canada EIA Requirement Checklist

This template documents the initial analysis of the requirement for an EIA and is designed to be used with the EIA decision framework and a completed project description. Additional information (such as correspondence with local Parks Canada or other experts) can be appended as required. If you have any questions, please contact a National Team IA Specialist.

Project Title: Waterton Streetworks Phase C

Project Location: Waterton townsite

Project File #: WLNP-2016-017

Proponent Contact Information: Jim Lambe 403-859-5120

Date of Request: 27/07/2016

Section A: No EIA Required

1. The project is exempted from EIA requirements under CEAA 2012 S. 70: *(check the appropriate box)*

☐ the project relates to matters of national security;

☐ the project is being carried out in response to a national emergency for which special temporary measures are being taken under the *Emergencies Act*; or

☐ the project is to be carried out in response to an emergency, and in the interest of preventing damage to property or the environment or in the interest of public health or safety.

2. The project is exempted from EIA requirements as the same project was previously assessed: *(both boxes must be checked to apply this option)*

☐ the previous EIA is adequate

☐ there is no change in information that would alter the results of the analysis.

3. The project is exempted from EIA requirements because **an initial analysis** has determined:

☐ **there is NO potential for adverse effects to natural and cultural resources**, including:

- natural resources targeted in management objectives and ecological integrity monitoring indicators; listed species at risk, their residence or critical habitat. Additionally, the activity is not prohibited in a protection order under the *Species at Risk Act*.
- cultural resources targeted in management objectives and identified in a Parks Canada cultural resource management document, or any structure, site or thing of historical, archaeological, paleontological or architectural significance.

OR

☐ potential adverse effects of the project are exclusive to cultural resources (including potential archaeological resources), and the **Cultural Resource Impact Analysis (CRIA) will be used** to assess impacts and determine appropriate mitigation measures.

Provide a concise explanation to justify the decision.

If you have exempted the project from an EIA requirement by selecting one of the three options above, Proceed to Section D.

Section B: EIA Pathway Decision

The EIA pathway to be applied to the proposed project is:

☐ an approved alternate process (must be approved by VP PAEC)
☒ one or more approved Best Management Practices (BMPs)
☐ a Basic Impact Analysis (indicate if one or more BMPs are also being used)
☐ a Detailed Impact Analysis (indicate if one or more BMPs are also being used)

Insert the name of the approved alternate process and/or applicable BMPs and **Continue to Section C.**

Waterton Lakes National Park General Project Best Management Practices, Version 1.2 Adapted for WLNP-2016-017

Section C: Permitting Requirements

Indicate the types of permits that may be required:

☒ Development/Building ☐ Lease/Licence of Occupation ☐ Water Withdrawal ☒ Business Licence
☒ Add others as required (*Fisheries Act*, *Navigation Protection Act*, *SARA authorization*, etc.)
Restricted Activity Permit for tree removal

Section D: Cultural Resource Requirements

Indicate the types of Cultural Resource Impact Assessment that may be required:

☐ A separate request for Cultural Resource Impact Assessment must be submitted.
☒ No additional assessment is required. The accidental finds mitigation applies to all project activities.
☐ Cultural Resources (including archaeology) will be included as a Valued Component of the BIA or DIA.
☐ Archaeological Overview or Impact Assessment is required.
☐ Additional mitigations related to Cultural Resources are indicated in section F below.

Section E: Recommendation and Approval

Prepared by (IAO name/position): Erin Rowlands / Environmental Assessment Officer	Date: 02/08/2016
Reviewed by: Edwin Knox / Cultural Resource Management Officer E. Knox	Date: Aug 3/16
Reviewed by: Dennis Madsen / Resource Conservation Manager	Date: Aug 2/16
Recommended by (Project Manager name/position): Jim Lambe / Project Manager	Date: Aug 3/16
Approved by (name of FUS, Director of a Waterway, or delegate): Ifan Thomas	Date:
Signature (FUS, Director of a Waterway, or delegate): **Ifan Thomas Superintendent** Aug 5/16	

(Note that EIA decisions regarding highway and waterway projects identified in Parks Canada's Investment Program may require joint approval with Associate VP, Asset Management and Project Delivery; however, the FUS/Dir. of a Waterway is responsible for issuing permits and authorizations for those projects).

Section F: Additional Comments

The Waterton Townsite Streetworks project is separated into five phases. Each phase involves the replacement of a portion of the town's infrastructure, including: the removal and replacement of deep utilities, a lift station, asphalt roadways, shallow utility relocation, curb and gutter, sidewalks and landscaping.

The current project (Phase C) is a continuation of the previous phases of townsite infrastructure replacement and includes construction work such as: fill replacement; excavation; sanitary, STM and water replacement; tree removal; surface works; and landscaping. It also includes other associated project work such as: asphalt removal; vegetation removal; paving; concrete placement; seeding; and line painting.

This project will run concurrently with Project # WLNP-2015-017-FII769 - Townsite Infrastructure and includes project components that are also addressed within its relative Environmental Impact Analysis (e.g., dark sky lighting, wayfinding signage, parking lot development and the Townsite Grounds Vegetation Management Plan. This overlapping ensures appropriate and consistent communication of environmental mitigations to project stakeholders across both projects.

Section G: Attachments

- WLNP General Project Best Management Practices, Version 1.2 – Adapted for Project WLNP-2016-017
- Project Description with site map
- Trees and Shrubs Recommended for Waterton Park Townsite

TREES AND SHRUBS RECOMMENDED FOR WATERTON PARK TOWNSITE

The following is a condensed list of native tree and shrub species which are recommended for planting in the Waterton Townsite area. Species of trees and shrubs native to the Waterton area are the preferred species to be used when planting and should be sourced locally to prevent the introduction of non-native varieties. Where possible species have been selected to minimize the attraction to wildlife (bears, deer, elk) and have reduced fire risk potential. Species not found on this list must be approved by the Park Ecologist (Vegetation) or representative prior to planting.

TREES:

Coniferous:

Douglas fir (*Pseudotsuga menziesii*) – medium browse; medium fire

- Growing to 10 metres or more with a massive trunk and dense, spreading branches. Occurs at low elevations on dry exposed slopes and ridges.
- A primary species on disturbed sites, it occupies a variety of habitats from moist to very dry soils
- Adaptable to most sites; therefore good survival rate
- Good windthrow resistance; good shade tree
- Plant well away from eaves troughs (high needle cast)

White Spruce (*Picea glauca*) – Low browse; high fire

- Often somewhat bluish-green with a dense crown, up to 15 metres in height.
- Best on a moist site; needs a great deal of water, especially after transplanting
- Good shade tree; wind and shade tolerant.
- Colorado Spruce is not a desirable alternative; it's non-native

Lodgepole Pine (*Pinus contorta*) – low browse; high fire

- Occurs on a wide variety of soils, at low to middle elevations
- Young trees are intolerant of shade and grow best on dry exposed sites

Limber Pine (*Pinus flexilis)* – low browse; high fire

- Long-lived and slow growing
- A SARA listed species but plantings in town site can be used as educational material

Deciduous:

Trembling aspen (*Populus tremuloides*) – high browse; very low fire

- Rather small and more or less rounded leaves
- Mature trees form groves from root suckers.
- Require a moderately moist site
- NOTE – lots of hybrid and cultivar species available – these must not be used.

Balsam Poplar (*Populus balsamifera*) – high browse; very low fire

- Tall tree growing best along creek-beds and lakeshores (requires a moist site)
- Long, wide leaf-blades
- Sticky seed scales can be a nuisance; roots can surface

Paper Birch (*Betula papyrifera*) – low browse; very low fire

- A slender, long-branched tree – 10-25 m tall, mature bark mostly white; peeling
- Moist upland sites; shade intolerant
- Can withstand moderate drought once established

Water Birch (*Betula occidentalis*) – low browse; very low fire

- Smaller tree - <10m; dark-reddish brown bark that does not peel.
- Good early successional species in moist areas

SHRUBS:

Mountain Maple (*Acer glabrum*) – medium browse; very-low fire

- A red-stemmed shrub growing to a few metres tall. Typical "maple leaf" shaped leaf blades
- Will grow on rocky sites

Shrubby Cinquefoil (*Potentilla fruticosa*) – low browse; low fire

- A coarse shrub of grasslands and open places, decorated June to September with numerous small, yellow, rose-like flowers.
- NOTE – lots of hybrid and cultivar species available – these must not be used.

Red Osier Dogwood (*Cornus stolonifera*) - high browse; low fire

- Willow-like shrub with distinct red bark and small greenish-white flowers; 1 to 3 metres tall
- grows best in damp, somewhat sheltered places

Wolf Willow (*Elaeagnus commutata*) – medium browse; low fire

- Leaves silvery in colour; exhibits small yellow aromatic flowers in June/July
- Forms small groves in seepage areas
- NOTE – lots of hybrid and cultivar species available – these must not be used.

Snowberry (*Symphoricarpos albus*) – medium browse; low fire

- Common in a variety of habitats
- Small bell-shaped flowers June to August

Buffalo-berry (*Shepherdia canadensis*) – medium browse; low fire

- PLANT MALE BUSHES ONLY
- Spreading shrub to 3m tall

Common Wild Rose (*Rosa woodsii*) – medium browse; low fire

- Exhibits bright pink flowers in June and July
- Open woods and thickets, some tolerance to sandy areas

Prickly Rose (*Rosa accicularis*) – high browse; low fire

- Branching shrub, up to 1.5 metres high
- Open woods and moist thickets

Tree Standards:

- In cases of tree replacement, the three replacement trees should be as large as available, with a 15 gallon root size and at least ¾" trunk size. If 15 gallon native trees are not available, on approval of the Parks Canada Surveillance Officer (SO), four 10 gallon trees may be planted instead.
- All trees must be guaranteed for one year (one growing season).
- Trees shall be inspected immediately after initial planting and during the growing season by a designated Parks Canada SO. After the growing season, the SO will determine final acceptance of the tree.
- Any planted tree that is dead or, in the opinion of the SO, is in an unhealthy or unsightly condition, and/or has lost its natural shape due to dead branches, excessive pruning, inadequate or improper maintenance, or other causes prior to final acceptance, shall be replaced in the next planting season. There shall be a growing season guarantee on trees commencing after the final inspection of the permitted planting.
- Where dead trees are identified, the dead material shall be removed within four (4) weeks of notification. When necessary, approved soil and grass seed shall be added to the pit to reclaim the site and eliminate potential tripping hazards at the time of removal.

General Tips:

- Select the right tree for the site. It is important to match your planting site and its conditions with a tree species' shade, moisture, and soil preferences.
- Plants should be put in the ground in autumn or spring and fenced immediately to prevent animal damage.
- Frequent watering is necessary for the weeks following transplantation or first growing season, and if possible up to the first frost.
- It is advisable to screen young plants from wind over the winter.
- Avoid planting dense clusters of shrubs; this helps limit cover for large animals such as cougars and reduces fire hazards.
- Even "fire resistant" vegetation will burn if the plant's moisture content is low.
- To prevent the spread of non-native species and reduce the appeal of the townsite for animals such as deer and bear, please avoid planting the following:
    - Saskatoon (*Amelanchier alnifolia*) - berries attract bears
    - Chokecherry (*Prunus virginiana*) - cherries can attract bears
    - Pincherry (*Prunus pennsylvanica*) – cherries can attract bears

    - Common Caragana (*Caragana arborescens*) - it's non-native and can crowd out other plants.
    - Junipers – (*Juniperus communis* & *horizontalis*) – can be highly volatile in case of fire.
- Provide good pre-planting care. Keep trees shaded, cool, and moist before planting. Be gentle when handling the root mass.
- Remove burlap, pots, wire baskets, rope, plastic, etc. from the roots and all labels, wires etc. from the stem. Removing these materials with the root ball in the hole minimizes root system disturbance. If you can't remove burlap because the ball is loose, at least slit and peel it back below the soil surface.

For further information please contact the Park Ecologist (Vegetation) at 859-5137.
In cases of tree replacement, for further information please contact the Park Surveillance Officer at 859-5185.

Parks Canada Parcs Canada

Parks Canada
Waterton Lakes National Park
General Project Best Management Practices

April 20, 2016

Version 1.2

Canada

Parks Canada Waterton Lakes National Park General Project Best Management Practices

Recommendation & Approval – Version 1.2

Modified for: WLNP-2016-017 Waterton Streetworks Phase C

Contact Information

24-hour Emergency Dispatch*:

Police: 9-1-1

Fire: 9-1-1

Ambulance: 9-1-1

* In an Emergency, 9-1-1 operators can also notify Banff Dispatch.

Parks Canada Emergency Dispatch:

Banff Dispatch: 403-762-1473

Project Manager:

Jim Lambe: 403-632-6043

Impact Assessment Office: 403-859-5185

Jennifer Carpenter: 403-632-5167

Eri Hiraga: 403-632-6071

Erin Rowlands: 403-632-5046

Table of Contents

Appendices

Figures

Tables

Drawings

No table of contents entries found.

Definitions

Sensitive Features are any areas designated by the IAO or through the EIA process as locations that require additional care and consideration for project activities. Examples of sensitive features include but are not limited to nests, dens and roosts, locations of cultural resources, critical habitat or residences for SAR, riparian areas, fescue grasslands, wildlife corridors, rare ecotypes, areas of management concern, etc.

The following is a list of Sensitive Features defined for this project.

Native trees and shrubs in townsite			

Abbreviations

BMP	Best Management Practices
COSEWIC	Committee on the Status of Endangered Wildlife in Canada
DFO	Department of Fisheries and Oceans
EAS	Environmental Alignment Sheets
EI	Ecological Integrity
EIA	Environmental Impact Analysis
ERP	Emergency Response Plan
ESCP	Erosion and Sediment Control Plan
IAO	Impact Assessment Officer
LEED	Leadership in Energy and Environmental Design
PCA	Parks Canada Agency
PM	Project Manager / Functional Manager of Project
SAR	Species at Risk
SARA	*Species at Risk Act*
SO	Surveillance Officer
VC	Valued Component
WLNP	Waterton Lakes National Park

Introduction

The *Waterton Lakes National Park General Project Best Management Practices* will allow an identified suite of project activities to be undertaken in such a manner that there will not be resulting significant adverse environmental effects.

The Best Management Practice (BMP) pathway is applied when there is a suite of routine, repetitive projects or activities, with well understood and predictable effects. This fulfils Parks Canada's obligations under the *Canadian Environmental Assessment Act 2012* as a manager of federal land, see the **Guide to the Parks Canada EIA Process**. The BMP maximizes efficiency through creation of a pre-approved impact assessment for the defined suite of projects, to which standard mitigation and environmental management measures can be applied.

The impact assessment office (IAO) will review a proposed project and advise the functional manager of the project (PM) if and how this BMP should be applied. The IAO's advice will be based on whether the project falls within the scope of the BMP, and whether application of the mitigation measures in the BMP will adequately address potential adverse effects of the project.

Project Managers are responsible to ensure all mitigation measures applicable to the project are added to the terms and conditions of any permits or contracts issued for the project.

The Impact Assessment Officers must ensure the project, Environmental Impact Analysis (EIA) pathway applied and determination are recorded in the Parks Canada National Impact Assessment **Tracking System**.

These BMPs have been compiled from a number of available documents, as listed at the end of this document, and have been adapted to address the predictable effects of routine, repetitive project or activities within the Waterton Lakes Field Unit.

Scope of Application

This BMP outlines the impact analysis of repetitive and routine projects[1]. Site security, worker safety and visitor safety are not included in the scope of this document. If a project involves some or all of below activities, and the initial assessment of site and project indicate "the project is unlikely to result in significant adverse environmental effects" the BMP can be applied. Projects that this BMP would likely be applied to include:

- The proposed maintenance, repair or upgrade of an **existing** development.
- **New** projects with restricted footprints that do not include sensitive habitats.
- Proposed restoration of **new** and **existing** developments.

For projects where further EIA is warranted, this BMP may be utilized as part of the mitigation package for the analysis. Therefore, this document also presents a minimum standard to provide

[1] For repetitive and routine projects on roadways, highways and parkways, refer to the Parks Canada National Best Management Practices - Roadway, Highway, Parkway and Related Infrastructure.

consultants and contractors for environmental protection measures on work sites. In these cases, additional protection measures and mitigations may be required.

Exceptions

Supplemental analysis and/or mitigations are required for the following project activities:

- New projects or developments in natural areas;
- Projects adjacent to sensitive features;
- Work that may impact aquatic or terrestrial wildlife habitat connectivity, such as new fences or culverts;
- Physical works immediately adjacent to the international boundary;
- Elongation of culverts; realigning water courses; dredging; or work below the high water mark of a fish bearing water body;
- Bridge projects needing work to occur below the High-Water Mark[2], with permanent; alteration to the water course, such as replacement of piers/abutments or permanent installation of structures on the bed of a water body;
- Greater than 5% increase in land use footprint (e.g. project expansion); and,
- Work which might adversely impact any potential or established Aboriginal and Treaty rights or traditional use[3].

If the project has the potential to have an adverse effect on the critical habitat of a species at risk (with endangered, threatened, or extirpated status) the project will require a separate environmental impact analysis.

If the project has the potential for **residual** adverse effects on a listed species at risk (including effects to individuals and residence of the individuals) the project will require a separate environmental impact analysis.

Note: If there is any uncertainty regarding potential adverse effects to species at risk, consult a member of the **National Office Species Conservation team**.

Approved Geographic Area of Application

This BMP is intended for use on projects completed in Waterton Lakes National Park (WLNP).

---

2 High-water Mark is the usual or average level to which a body of water rises at its highest point and remains for a sufficient time so as to leave a mark on the land. (Fisheries and Oceans, 2015).

3 Parks Canada must engage in additional and separate consultations with Aboriginal groups if there is a possibility of a project adversely affecting established or potential Aboriginal or Treaty rights. This is required to fulfil federal government responsibilities in upholding the honour of the crown. If there is uncertainty regarding the need for Aboriginal consultation with respect to a project, refer the matter to Parks Canada Legal Services for advice. Guidance on consultation may be sought from the **Aboriginal Affairs Secretariat** and from the guidance document "**A Handbook for Parks Canada Employees on Consultation with Aboriginal Peoples**".

Roles and Responsibilities during Construction

The following is a select list of key roles that will be in place during the construction program[4]. The responsibilities of the key roles are not limited to those that are stated below, as this is a select list of roles most relevant to compliance with environmental commitments and regulations for projects where the proponent is the Parks Canada Agency (PCA).

Project Manager (PM)
The Project Manager is accountable to deliver the project and is responsible for managing risk, scope, time and budget. The Project manager is the Technical Authority and is the contractor's unique point of contact. The Project manager reviews and develops contract change order and supporting documents and conducts pre-construction meetings and chairs project team meetings. Note that where the proponent of a project is external to Parks Canada, a functional manager of the project within the Agency is designated.

Project Inspector
The Project Inspector reviews plans for compliance to building codes and development guidelines. The Project Inspector performs inspections on behalf of the Project manager and monitors contract compliance in consultation with procurement office. The Project Inspector is responsible for keeping daily logs.

Project Leader
The Project Leader is accountable for the overall success of the project. The Project Leader recommends approval to proceed to the construction phase and approves changes in scope, budget or schedule in consultation with Procurement Officer.

Impact Assessment Officer (IAO)
The Impact Assessment Officer is responsible for drafting and/or reviewing the EIA and ensuring that the scope of work of the environmental analysis complies with Parks Canada's responsibilities under the *Canadian Environmental Assessment Act* 2012 as well as all other relevant regulations and guidelines. The IAO may also function as the SO for project construction.

Surveillance Officer (SO)
The Surveillance Officer is responsible for on-site surveillance of the work in accordance with the Parks Canada EIA and environmental regulations and guidelines. The SO will provide direction regarding environmental assessment / environmental infractions or emergencies through the Project Manager unless necessary. As the Parks Canada representative for environmental concerns, the SO may consult with relevant specialists to determine appropriate implementation for mitigation measures. The SO has the authority to stop work for National Parks Act violations, however, during normal operations does not give direction to the Contractor.

---

[4] The list of roles and key responsibilities have been modified from the PCA document *Construction Site Roles and Responsibilities*.

Consultants
Consultants recommend contract amendments, reviews and approves shop drawings and provides advice on project compliance. Consultants perform inspections on behalf of the Project Manager.

Environmental Consultants
Under the direction of the IAO, environmental consultants are responsible for producing deliverables as required for the Project, including, but not limited to: Environmental Impact Assessment, site-specific mitigation strategies, Environmental Alignment Sheets (EAS), Environmental Management Plan.

Prime Contractor
The Prime Contractor is responsible for developing a site-specific Occupational Safety and Health Management Plan. The Prime Contractor is responsible for guarding the health and safety of those working on and visiting the site through implementing occupational safety and health induction training. The Prime contractor also obtains materials and labour necessary to successfully complete the project. The Prime contractor will engage and plan the work of sub-contractors and acquire all necessary licenses and permits, provide any required EIA construction planning documents for review (see **Submissions Section**) and record minutes of site meetings.

Banff Dispatch 403-762-1473
911 proves 24-hour emergency dispatch services and will connect callers with emergency or other Parks Canada services as required (e.g., Warden/Law Enforcement Services, Duty Officers). Banff dispatch at 403-762-1473 can be used for 24 hour notification to Parks Canada in non-emergency situations. When calling, if unsure what services you require, request a Waterton Duty Officer.

Environmental Overview

Environmental Setting

Waterton Lakes National Park (WLNP) occupies approximately 505 km^2 in the southwest corner of Alberta in the southern Rocky Mountains. WLNP forms part of the Waterton-Glacier International Peace Park, and is a designated UNESCO World Heritage Site due to its significant ecological, scenic and cultural values. The park is rich in biodiversity, which includes 1001 vascular plant species, 23 fish species, 6 amphibian species, 4 reptile species, 62 mammal species and over 250 bird species.

As part of the Crown of the Continent ecosystem, WLNP makes up part of a north-south wildlife corridor including migratory bird and bat flight pathways (Lausen 2012). Five ecoregions - foothills parkland, montane, lower subalpine, upper subalpine and alpine – are represented within WLNP boundaries.

Ecological Integrity
Ecological Integrity (EI) is defined in the Canada National Parks Act as “a condition that is determined to be characteristic of its natural region and likely to persist, including abiotic components and the composition and abundance of native species and biological communities, rates of change and supporting processes”.

The indicators used to assess EI in WLNP include: Forest, Freshwater, and Grasslands. Measures of these indicators are summarized and include: Terrestrial Birds, 5-Needled Pine – Health Transects, Area Forest Area Disturbed by Fire, Sensitive Species Secure Habitat, Multi-species Mammal Occupancy, Stream Biotic Health (CABIN), Lake Fish Index, Water Quality, Amphibian Occupancy, Stream Fish Community Index, Grassland Birds, Non-Native and Native Plants, Grassland Extent, Elk, and Grassland Area Disturbed by Fire.

Species at Risk

WLNP is host to a number of species that are Endangered, Threatened and Special Concern under Schedule 1 of the *Species at Risk Act* (SARA). Species listed as Endangered, Threatened and Special concern under COSEWIC, as well as the Alberta *Wildlife Act* are also considered in managing species at risk within WLNP. Defined and proposed critical habitat within WLNP is found in **Appendix 2** and other habitat association maps.

Table 1 Species at Risk Occurring in Waterton Lakes National Park

Species	SARA status	COSEWIC	Provincial Status
Vascular Plants			
Bolander's Quillwort	Threatened	--	--
Limber Pine	--	Endangered	Endangered
Whitebark Pine*	Endangered	--	Endangered
Arthropods			
Half-moon Hairstreak*	Endangered	--	--
Western Bumble Bee	--	Threatened (southern subspecies)	--
Amphibians			
Long-toed Salamander	--	Not at risk	Special Concern
Northern Leopard Frog	Special Concern (Western Boreal/Prairie Populations)		Threatened
Western Tiger Salamander	--	Special Concern (Prairie/Boreal Population)	--
Western Toad	Special Concern (Calling and/or Non-calling populations)	--	--
Reptiles			
Western painted turtle	Special Concern	--	--
Birds			
Band-tailed Pigeon	Special Concern	--	--
Bank Swallow	--	Threatened	--
Barn Swallow	--	Threatened	--
Black Swift	--	Endangered	--
Bobolink	--	Threatened	--
Canada Warbler*	Threatened	--	--
Chestnut-collared Longspur*	Threatened	--	--
Common Nighthawk*	Threatened	--	--
Ferruginous Hawk*	Threatened	--	Endangered
Harlequin Duck	--	Not assessed	Special Concern
Horned Grebe	--	Special Concern	--
Lewis's Woodpecker*	Threatened	--	--
Loggerhead Shrike	Threatened	--	Special Concern
Long-billed Curlew	Special Concern	--	Special Concern
Olive-sided Flycatcher*	Threatened	--	--
Peregrine Falcon	Special Concern	--	Threatened
Prairie Falcon	--	Not assessed	Special Concern
Red-headed Woodpecker*	Threatened	--	--
Rusty Blackbird	Special Concern	--	--
Short-eared Owl	Special Concern	--	--

Species	SARA status	COSEWIC	Provincial Status
Sprague's Pipit	Threatened	--	Special Concern
Trumpeter Swan	--	Not at Risk	Special Concern
Western Grebe	--	Special Concern	Threatened
Western Screech-Owl*	Endangered	--	--
White-winged Scoter	--	Not assessed	Special Concern
Whooping Crane	Endangered	--	--
Fish			
Westslope Cutthroat Trout	Threatened	--	Threatened
Bull Trout	--	Threatened (Saskatchewan-Nelson Population)	Threatened
Pygmy Whitefish	--	Not assessed	Threatened
Mammals			
American Badger	--	Special Concern	Data Deficient
Grizzly Bear	--	Special Concern (Western Population)	Threatened
Little Brown Myotis*	Endangered	--	Data Deficient
Plains Bison	--	Threatened	--
Western Small-footed Myotis	--	Not assessed	Special Concern
Wolverine	--	Special Concern (Western Population)	Data Deficient

*species with no published recovery strategy

Components of the environment that may be affected

Potential effects from projects occurring within WLNP are well understood and predictable. They include:

Water Resources:

- Adverse modifications to surface drainage patterns
- Reduced water quality due to increased erosion, sedimentation, transportation of debris and contamination (i.e. from leaks and accidental spills, etc.)
- Physical alteration of aquatic habitat

Soil/Land Resources:

- Change in slopes, landforms and landscape
- Soil compaction and rutting
- Slope instability due to increased soil exposure and improper excavation and storage
- Soil contamination

Air quality:

- Decreased ambient air quality (i.e. from dust, equipment emissions, etc.)
- Increased ambient noise levels
- Temporary increased levels of CO2 and other pollutants
- Temporary increased localized temperatures from paving and equipment operation

Vegetation:

- Damage to and/or removal of vegetation in immediate or adjacent areas
- Introduction of non-native species populations, or expansion of existing populations

Wildlife:

- Introduction of non-native species populations, or expansion of existing populations
- Wildlife sensory disturbance causing displacement/preferred habitat avoidance
- Wildlife habituation/attraction to artificial food sources

- Impeded/altered wildlife movement
- Damage to nests/disruption of nesting animals
- Mortality from project activities
- Damage to the quality of nesting / spawning / roosting habitats

Cultural Resources:

- Adverse effects on the heritage value or character-defining elements of a cultural resource
- Impacts to archaeological resources (known or potential)

Visitor Experience / Safety

- Decreased quality of visitor experience due to temporary area closures, operation of equipment, sensory disturbance
- Potential impacts to visitor safety due to construction activities

Mitigation Measures

1. Environmental Surveillance

1.1. All projects are subject to environmental surveillance by the SO to ensure that mitigation measures as outlined through the EIA process are implemented during all phases of construction, including clearing, grading, construction, cleanup, and restoration.

1.2. The SO will report deficiencies to the PM and summarize site visit observations in a surveillance report. The surveillance report will be filed into a database to supplement information for restoration activities in the future.

1.3. The Prime Contractor is responsible for keeping the SO informed of project activities and will notify the SO prior to the following activities:

- Vegetation clearing and soil stripping < 30 m from sensitive features;
- Activities in and < 30 m from water;
- Species at risk mitigation measures;
- Rare plant mitigation measures; and
- As otherwise outlined in the project EIA.

2. Project Planning / Design

Project planning and engineering design for new projects or upgrades to existing infrastructure will incorporate consideration of environmental impacts of long term operation and the potential for Conservation Gains through improved design.

Lighting / Dark Sky Compliance

2.1. The replacement or installation of new lighting must be dark sky compliant and follow the Parks Canada Guidelines and Specifications for Outdoor Lighting (**Appendix 9**). Outdoor fixtures must be shielded, full cut off low intensity dark sky compliant lights. Interior lighting must be designed to reduce light trespass. The colour temperature of any new luminaires should be under 3000K, with amber LED or converted amber LED preferred.

Wildlife Collisions & Direct Mortality

Buildings and structures may include features that attract or result in direct mortality of wildlife. For example, reflective or transparent surfaces and lights left on after dark can attract or confuse resident and migratory birds leading to an increase in collisions.

2.2. Incorporate lights that shut-off automatically to promote energy efficiency and reduce night time bird collisions.

2.3. Minimize use of unnecessary reflective or transparent materials in building design.

2.4. For windows, complete risk assessment for collisions and consider technologies that effectively make windows visible to birds (e.g., UV visible coatings, closely spaced marker dots).

2.5. Appropriately screen chimney and ventilation shafts to avoid attracting cavity roosting birds or bats to risky locations.

2.6. Appropriately screen all water intakes to prevent amphibian and fish mortality.

Wildlife Habitat & Movements

2.7. Do not constrict wildlife movement corridors and wildlife trails with physical barriers or sensory disturbance (e.g., lighting, fences, generator noise, and increased human use). Known areas of constricted wildlife movement are outlined in **Appendix 6**.

2.8. In the Waterton community or areas with high visitation, do not create wildlife barriers where animals may become trapped or difficult for Wildlife Conflict Specialists to manage (e.g., fences, corners, spaces under decks).

2.9. Enclose all areas such as under porches, to prevent access by wildlife (*e.g.,* prevent cougars from using these areas for hunting, caching and resting).

2.10. For gated/fenced areas, provide escape routes such as leaving 45 cm clearance under gates.

2.11. Improve landscape connectivity for terrestrial and aquatic wildlife:

- Remove anthropogenic constrictions from wildlife movement corridors;
- Increase the span length of bridges during replacements to allow for terrestrial wildlife passage underneath; and
- Convert smaller culverts to larger culverts or clear span bridges to allow for better fish passage and less restricted flows (see **culvert section**).

Human Use

2.12. Incorporate human behaviour into design to minimize human use impacts on the surrounding lands. Some examples include:

- Block social trails and provide clear wayfinding signage to encourage use of designated trails;
- Formalize a single trail to remove multiple social/unwanted trails;
- Prevent vehicle parking outside designated areas; and
- Manage wildlife attractants and litter through garbage facilities.

Efficiency

2.13. Design includes materials and technologies that minimize environmental impacts through the lifecycle of the material.

2.14. Design incorporates energy efficiency, reduction of greenhouse gases and environmental design best management practices (e.g., LEED criteria).

2.15. Minimize water use and incorporate water meters in buildings over 1000 m^2.

Project Footprint & Siting

2.16. Avoid sensitive features and apply appropriate setbacks.

2.17. The Project Footprint and construction methods use existing disturbances and development footprints as much as possible in order to minimize project impacts on native vegetation.

2.18. Minimize visual impact of site layout, access routes and construction activities.

2.19. Locations are compatible with any zoning requirements (e.g., avalanche paths, wilderness zone).

2.20. Design minimizes the area and/or impact of disturbance.

2.21. Design and plan activities and works near watercourses and waterbodies to minimize disturbance to aquatic habitat and avoid sensitive spawning habitats.

2.22. Design and construct approaches to a watercourse perpendicular to the watercourse to minimize loss or disturbance to riparian vegetation.

2.23. Avoid building structures on meander bends, braided streams, alluvial fans, active floodplains or any other area that is inherently unstable and may result in erosion and scouring of the stream bed or the built structures.

Aquatic Habitat / Water Quality

2.24. Minimize runoff into water bodies; direct runoff and storm water into vegetated areas rather than directly into surface waters.

2.25. Avoid designs and construction practices that result in long, smooth, uniform slopes and may contribute to erosion or sediment transfer.

2.26. Apply appropriate standards for all septic field, pit privy, and other waste water management at facilities.

2.27. Projects < 100 m from sensitive aquatic features including wetlands, drainages, streams, lakes and other surface water requires additional EIA to determine appropriate setbacks, mitigations and other design considerations related to aquatic habitats.

Fire

2.28. Design considers location and materials appropriate for risk of fire, following FireSmart Canada guidelines where feasible to reduce risk of fire in the wildland-human interface.

Restoration Funding / Plan

2.29. Project planning and design minimize the disturbance to surrounding vegetation as much as is feasible.

2.30. Project planning incorporates opportunities to restore or use existing disturbed areas.

2.31. Project planning includes restoration of the site following construction. Short term revegetation must establish native vegetation cover to reduce potential for erosion, topsoil loss, and weed infiltration and spread. Long term restoration will establish native vegetation communities similar to existing communities prior to disturbance, or comparable to adjacent areas (see **Restoration Section**).

Pre-Construction Surveys

2.32. Prior to the commencement of project activities, the IAO may determine that field surveys are required to determine the applicability of this BMP, requirements for additional impact analysis, identify sensitive features, and determine mitigations.

2.33. All ground disturbance activities must be compared to local archaeological resource inventories and the IAO will consult with the Terrestrial Archaeology section. An Archaeological Overview Assessment (AOA) may be required to determine the archaeological potential of the work area. Based on the results from the AOA, an Archaeological Impact Assessment (AIA) might be required.

Survey	Required	Details
Phase I Environmental Site Assessment	☐	
Hazardous Materials Survey	☐	
Reconnaissance Site Visit	☐	
Rare Plant Survey	☐	
Wetland Survey	☐	

Survey	Required	Details
Wildlife Survey (list types)	☐	
Fish Assessment	☐	
Soils / Geotechnical	☐	
Cultural Resources (list type)	☐	
AOA / AIA	☐	
Water/Air Quality	☐	
Visitor Experience	☐	
Weed Survey	☐	
Other	☐	

3. Submissions

3.1. Check box of attachments / plans required prior to the start of construction.

Attachments / Plans	Required	Responsible Party	Reviewer and Submission Deadline
Environmental Alignment Sheets	☐		
Erosion and Sediment Control Plan	☒	Prime Contractor	EA Coordinator 2 weeks prior to project commencement
ERP (Emergency Response Plan)	☒	Prime Contractor	EA Coordinator 2 weeks prior to project commencement
Spill Response Plan	☒	Prime Contractor	EA Coordinator 2 weeks prior to project commencement
Fire Contingency Plan	☒	Prime Contractor	EA Coordinator 2 weeks prior to project commencement
Avalanche Safety Plan	☐		
Site-specific Mitigation Details	☒	Prime Contractor	As activities dictate (i.e. HDD, work near water, etc)
Restoration/Landscape Execution Plan	☒	Prime Contractor	EA Coordinator 2 weeks prior to project commencement.
HDD or Geotechnical Drill Plan	☒	Prime Contractor	All drilling activities require a Restricted Activity Permit. Contact EA Coordinator with plan 5 days prior to drilling activities.

4. Erosion and Sediment Control Plan

4.1. An Erosion and Sediment Control Plan (ESCP) will be prepared that covers all construction and restoration periods.

4.2. The requirements for an erosion and sediment control plan can be scaled to the scope and associated risks of the project, as determined by the IAO or SO.

4.3. The Erosion and Sediment Management Plan will be developed by a qualified professional and is subject to approval of the IAO.

Timing of Works

4.4. Schedule work to avoid extreme wet, windy and rainy periods that may increase erosion and sedimentation.

4.5. Avoid soil disturbing activities during periods with saturated soils, periods of runoff, high rainfall intensity, high winds, or wet snow. Temporarily stop work when wet ground conditions contribute to erosion and sediment transport.

General Mitigations

4.6. Erosion control measures that prevent sediment transport into any waterway, water body or wetland shall be implemented by the contractor.

4.7. Identify high risk areas or components of the project including areas with fine-grained soils, sandy deposits, slopes, shallow soils, or adjacent to sensitive features (e.g., riparian areas).

4.8. Identify sources of potential runoff (e.g., ditches, slopes) from within the construction site or from upslope areas. Construct and maintain structures to deflect sources of runoff from entering areas of exposed soils (e.g., diversion ditches, vegetative filter strips).

4.9. Acquire necessary erosion and sediment control equipment (i.e., landscaping fabric, sediment fences, coir rolls etc.) and install prior to risk of sediment transport.

4.10. Minimize slope lengths and angles, promote surface roughness on slopes, and avoid designs and construction practices that result in smooth, uniform slopes. Incorporate texture and organics into the cover of slopes to reduce soil erodibility.

4.11. Plan project activities to minimize soil handling.

4.12. Limit equipment movement over exposed soils.

4.13. Avoid activities that contribute to soil compaction and use practices that roughen and decompact soils to promote infiltration.

4.14. Ensure all activities are conducted at least 30 m from waterbodies wherever possible.

4.15. Minimize extent of vegetation cover removal and grubbing. Clearly mark construction boundaries to prevent accidental damage to vegetation.

4.16. Where vegetation cannot be retained, apply soil covers to erodible areas (granular materials, mulches, tackifier, tarps). Note that tarp covers may not be suitable at most locations in WLNP where high winds are common.

4.17. Minimize the length of time soils are exposed and complete work in one area before commencing work in another area.

4.18. If vegetation clearing is scheduled early due to timing windows, grubbing should be delayed until just prior to construction activities, in order to maintain soil stability.

4.19. Initiate replanting of disturbed areas immediately after construction is completed.

4.20. Ensure all erosion and sediment control devices are weed free. Straw and hay based erosion control is not permitted.

4.21. Avoid use of coconut matting due to ungulate hoof entrapment.

4.22. Maintain and repair all erosion and sediment control structures in a timely manner. If the design of the control measures is not functioning effectively they are to be repaired.

4.23. The site will be secured against erosion during any periods of construction inactivity or shutdown.

4.24. Install all erosion and sediment control devices according to Typical Drawings included in ESCP. Typical Drawings must be on site and available at the request of the SO.

Minimum Requirements

4.25. The minimum requirements of an erosion and sediment control plan include consideration of:

- Project design and spatial concept of environmental sensitivities (e.g. watercourses, wetlands, steep slopes etc.);
- Erosion prevention procedures (e.g., project schedule, minimization of work area, site management, ground cover measures);
- Sediment control measures (e.g. sediment fences, check dams, sediment traps, etc.) including specifications and Typical Drawings of sediment control structures;
- Detailed plans for instream works including site isolation measures and project timelines;
- Water management plans including site control, equipment necessary and proposed dewatering locations;
- Locations of erosion and sediment control measure application;
- Monitoring of prevention and control measures and corrective actions (e.g., repairs).
- Removal of non-biodegradable materials once site is stabilized.

5. Emergency Response Plan Module

5.1. The general emergency contact for WLNP is 9-1-1.

Spill Response Plan

5.2. The Prime Contractor is responsible for ensuring that a Spill Response Plan is developed prior to start of work and the plan is subject to approval of the IAO.

5.3. The Prime Contractor is responsible for ensuring that spill kits sufficient to contain and clean up 110% of the site's largest possible fuel / chemical spill must be retained on site at each location of potential spills (sites where equipment is working).

5.4. The Prime Contractor is responsible for ensuring that all crew members and sub-consultants on site receive a briefing about the Spill Response Plan and are aware of the location and use of spill kits and containment devices.

General Mitigations

5.5. Avoid work in high risk areas, particularly in areas of high water table, steep slopes or in close proximity to streams.

5.6. Have spill containment equipment on-hand and ensure that all personnel are aware of their location and trained in their use.

5.7. Absorbent booms must be immediately available on site during works in and near water.

5.8. Ensure all construction equipment is free of leaks from oil, fuel or hydraulic fuels. See **General Activities** module for the requirements for equipment inspection by the SO prior to entry to WLNP.

5.9. The crossing of any waterbody (including wetlands) by construction equipment, or the use of such equipment within waterbodies is strictly prohibited unless prior approval has been confirmed from the SO.

5.10. Designate refuelling areas at least 100 m away from any water body. Refuelling activities should not be conducted where run-off could carry contaminants into drainage pathways (including storm sewers).

5.11. Hazardous or toxic products shall be stored no closer than 100 metres from streams, wetlands, water bodies or waterways.
5.12. Equipment will be fuelled on hardened surfaces wherever possible.
5.13. Spill kits shall be provided at re-fuelling, lubrication, and repair locations.
5.14. Dispose of contaminated materials at provincially certified disposal sites outside of WLNP. No treatment of contaminated soils (e.g., bioremediation) is allowed in WLNP. All applicable documentation demonstrating proper disposal will be provided to Parks Canada.
5.15. If potentially hazardous materials (e.g. cement-based products, sealants or paints) are used on site ensure raw material, mixed compounds and wash water are not released to any watercourse or soils. Secondary containment measures such as collection/drip trays and berms lined with occlusive material such as plastic and a layer of sand, and double-lined fuel tanks are required.
5.16. All gas generators and water pumps require secondary containment. Electric pumps are preferred.
5.17. Follow all applicable regulations and codes for the management and handling of hazardous waste.
5.18. The costs involved in a spill incident (the control, clean up, disposal of contaminants and site remediation to pre-spill conditions), shall be the responsibility of the Prime Contractor. The site will be inspected by the SO to ensure completion to the expected standard and to the satisfaction of Parks Canada.
5.19. Timely and effective action shall be taken to stop, contain and clean-up all spills as long as the site is safe to enter. In the event of a major spill, all other work shall be stopped and all personnel devoted to spill containment and clean-up.
5.20. The SO shall be notified immediately of any spill. In the event of a major spill, Banff Dispatch (403-762-1473) shall be notified immediately.

A major spill is defined below:

Material	**Immediate Notification Requirements**	**Written Spill Report Requirements**
Any deleterious substance that enters a water body of any type (e.g., stream, lake, wetland, drainage, sewer) or poses a threat to human safety (e.g., slippery road, explosive hazard, poisonous gas).	Any Quantity, notify the SO and Banff Dispatch.	Required; Major Spill
Any substance that is hazardous or toxic to the environment including but not limited to, waterproofing agents, grout, cement, concrete finishing agents, hot poured rubber membrane materials, asphalt cement, sand blasting agents, paint, solvents and hydrocarbons (e.g., fuel, grease, hydraulic fluid).	<100 L, immediately notify the SO. > 100 L, immediately notify the SO and Banff Dispatch.	At the discretion of the SO. Major Spill if not contained. Required; Major Spill

Minimum Requirements

5.21. The Spill Response Plan must at minimum, include the following information:

- List of products and materials that are considered or defined as hazardous or toxic to the environment. Such products include, but are not limited to, waterproofing agents, grout, cement, concrete finishing agents, hot poured rubber membrane materials, asphalt cement, sand blasting agents, paint, solvents and hydrocarbons.
- required equipment on site and location of spill kits;

- spill prevention procedures (i.e., containment and storage of materials, security, handling, use and disposal of empty containers, surplus product or waste generated in the application of these products in accordance with all applicable federal and provincial legislation);
- fuelling procedures, fuel storage;
- spill response (i.e., containment, clean-up, disposal of contaminated materials, etc.);
- spill reporting procedure; and
- up-to-date emergency response contact list including contact information for reporting spills.

Spill Reporting Requirements

5.22. Immediate spill reports are verbal notifications and must include all available information. Follow-up written spill reports must include the following:

- Prime Contractor Name
- Name and Contact Number
- Location and time the spill occurred
- Type and quantity of the substance spilled
- Cause of the spill
- Size of area the spill spread to
- Was the spill in water or on land
- Does the spill have potential to enter a water body
- Detail of immediate action taken to control the spill
- Additional actions required or ongoing to control the spill
- Any restoration required at the spill site
- Names of PCA representatives that were present at the spill site

Fire Contingency Plan

5.23. An emergency fire contingency plan is required for projects where risk of fire exists (e.g. for operations on dry grassland habitats) as requested by the IAO in consultation with the Fire Management Officer.

5.24. Fires or burning of waste materials is not permitted.

5.25. The Prime Contractor is responsible for ensuring that all crew members and sub-consultants on site receive a briefing about the Fire Contingency Plan and are aware of the location of emergency equipment, such as fire extinguishers.

5.26. Where an emergency fire contingency plan has been requested, the prime contractor should provide, at minimum the required equipment as defined in Table "A" of the *Alberta Forest and Prairie Protection Regulations*.

5.27. The fire contingency plan must at minimum contain the following information:

- required equipment on site;
- fire prevention procedures;
- initial response;
- fire reporting procedure; and
- up-to-date emergency response contact list.

Table 2 Adapted Alberta Forest and Prairie Fire Protection Regulations AR 135/72, Table "A"

	People Employed at the Site of Operations

Required Equipment for Fire Control	1	2	3	4	5	6-10	11-20	21-30	31-40	41+
Shovels	1	1	2	2	3	5	10	15	20	Same as 31-40 plus increase as required by SO.
Back pack with pump	0	0	1	2	3	5	10	15	20	
Axe or Pulaski	0	1	1	1	2	5	10	15	20	
Fire pump	0	0	0	0	0	0	0	1	1	
Fire hose (metres)	0	0	0	0	0	0	0	450 m	450 m	
Power saw	0	0	0	0	0	0	0	1	1	

6. General Activities Mitigations Module

Construction activities involve the use of laydown/staging areas, equipment operations, storage and handling of hazardous materials. Potential adverse effects include: alteration of vegetation, erosion and sedimentation, constriction for wildlife movements and introduction/spread of non-native vegetation.

6.1. All employees must attend an environmental briefing with a SO before beginning work at the site to review and explain the mitigations that are conditions of the project approvals. Employees must attend this briefing before beginning their work at this site.

6.2. All equipment and vehicles will be made available for inspection by the SO on arrival to WLNP. The Prime Contractor will give 48 hours' notice and schedule equipment inspection with the SO. Water trucks require a written restricted activity permit from the SO to enter the Park. The permit is received at initial inspection.

Construction Timing / Visitor Experience

6.3. Confine construction activities to hours set below, and if possible to periods of low visitation in order to reduce sensory disturbance to wildlife and visitors.

6.4. Time activities to minimize vehicle conflicts on access roads (*i.e.,* where possible, schedule activities so that equipment operations does not disrupt traffic flow; result in wildlife collisions).

6.5. All Parks Canada designated speed limits apply to construction vehicles. Additional speed restrictions may be required to protect wildlife and visitor safety.

	Required	**Location(s)**	**Notes**
Additional Speed Limits	☒		Additional speed limits may apply, as determined by working conditions/location and at the discretion of the SO.
Work Hour Restriction	☒		Work hour restrictions may apply, as determined by working conditions/location and at the discretion of the SO.
Designated Truck Routes	☒		Designated truck routes may apply, as determined by working conditions/location and at the discretion of the SO.

Timing Windows

6.6. Timing windows to reduce erosion, maintain compliance with the *Migratory Birds Convention Act*, *Fisheries Act, Species at Risk Act* and may be part of best practices to reduce erosion and environmental effects. See detailed mitigations for timing windows under **Erosion and Sediment Control**, **Vegetation Removal** and **Buildings** modules where these activities are part of project works. A summary of these restrictions is made below.

Consideration	Applicable	Restricted Window	Notes
Migratory Bird General Breeding Period	☒	April 1 to August 31	Nesting survey(s) to be completed by SO prior to any tree removal. All tree removal requires Restricted Activity Permit and 3:1 compensation.
Bat Maternity Roost Activity Period	☒	April 1 to August 31	Bat roosting survey(s) to be completed by SO prior to any tree or structure removal.
Bat General Activity Period	☒	April 1 to October 31	Bat survey(s) to be completed by SO prior to any tree or structure removal.
Amphibian Calling Window	☐		
Bull Trout Restricted Work Periods	☐	August 31 to August 15	
Other Fish Species Restricted Work Periods	☐	Consult IAO	
Grassland Dormancy	☐	October 1 to February 28	
Additional Timing Considerations (e.g., weed seed set, soil protection)	☐	Dry late summer and fall conditions	

Work Site Conditions/Staging/Laydown

6.7. Minimize vegetation-clearing activities and ground disturbance by staging on existing hardened areas wherever possible.

6.8. Delineate the work zone; clearly mark the limits to active construction, sensitive features and the access and egress locations.

6.9. The Prime Contractor is responsible for security and safety of the work site.

6.10. Strong winds are a regular occurrence in WLNP. Prevent materials from blowing off of work site.

6.11. If contamination is found, cease work immediately and if necessary, implement Emergency Response Plan.

Wildlife Observations and Encounters

6.12. Notify the SO immediately of any dens, litters, nests, carcasses (road kills or other), wildlife encounters, or carnivore (bears, wolves or cougars) observations on or around the worksite.

6.13. If wildlife is observed at or near the work site, allow the animal(s) the opportunity to leave the work area to the surrounding habitat and away from areas of potential conflict.

6.14. If potentially dangerous wildlife (e.g., bear, cougar, wolf, deer, sheep) persistently enter the work area or display aggressive behaviour, the contractor will immediately stop work, notify 9-1-1 or Banff Dispatch (403-762-1473), and safely evacuate the area.

6.15. Contractor will make bear spray, bear spray training, and wildlife awareness training mandatory to all workers on site.
6.16. Secure all materials that might attract wildlife (e.g. petroleum products, human food, recyclable food and drink containers and garbage).
6.17. No feeding, baiting or luring of any wildlife (including bears, small mammals, birds); do not approach or harass wildlife in any way. Notify the SO immediately if wildlife obtain garbage or human food. If wildlife get into attractants that have been intentionally or accidentally left out, individuals or the contractor could be charged under the *Canada National Parks Act* Regulations.

Equipment Operations & Fuelling

6.18. Equipment movements and workers' private vehicles shall be restricted to the designated footprint of the construction area.
6.19. Protective measures, including using appropriately sized equipment, or protective access matting must be employed if entry into wet areas is required.
6.20. Due to the importance of fescue grassland within WLNP, vehicles must not be driven onto any open grassland areas unless it has been designated by the SO as a parking area prior to construction activities.
6.21. Machinery must arrive on site in a clean and dry condition and be maintained free of fluid leaks, vegetative material (*i.e.,* invasive species, noxious weeds) and soils from off-site. All construction equipment from outside WLNP will be washed prior to arrival to minimize the risk of introducing weeds or aquatic invasive species. Additional weed-cleaning stations may be designated by the SO depending on project activities and locations (see table below).

	Required	**Location(s)**	**Notes**
Are additional weed cleaning stations required?	☐		No additional weed cleaning stations required.

6.22. Inspect equipment daily for fluid/fuel leaks and maintain equipment in good working order.
6.23. Equipment fuelling and maintenance sites will be identified by the Contractor and approved by the SO. Fuelling should occur on hardened areas > 100 m from streams, wetlands, waterbodies or watercourses. Fuelling personnel shall maintain presence at and provide immediate attention to the fuelling operation.
6.24. Mobile fuel containers (e.g., slip tanks) shall remain in the service vehicle at all times.
6.25. Operate machinery on land above the high water mark, on ice, or in another manner that minimizes disturbance to the banks and bed of any water body.
6.26. Limit machinery crossing (fording) a stream or watercourse to a one-time event (i.e., over and back), and only if no alternative crossing method is available. If repeated crossings of the watercourse are required, construct a temporary crossing structure in compliance with the *Fisheries Act*.
6.27. For fording equipment without a temporary crossing structure, use stream bank and bed protection methods (e.g., swamp mats, pads) if minor rutting is likely to occur during fording.

6.28. Use temporary crossing structures or other practices to cross streams or water bodies with steep and highly erodible (e.g., dominated by organic materials and silts) banks and beds.
6.29. Equipment that will work adjacent to or within a stream or watercourse should be free of external grease, oil or other fluids, excessive mud, dirt and vegetation before entering the work area.

Small Equipment

6.30. All small equipment (e.g., chainsaws, mowers, etc.) should be kept in good working condition and free of oil and fuel leaks.
6.31. Where possible, chain oil should be vegetable-based.
6.32. Fuelling of chainsaws will take place outside of riparian areas and sensitive features.

Site Clean Up/Waste Disposal

6.33. Clean tools and equipment at an appropriate off-site facility to prevent the release of wash water that may contain deleterious substances.
6.34. Sweep up loose material or debris. Any material that may pose a risk of contamination to soils, surface water or groundwater should be disposed of appropriately off-site.
6.35. No construction waste (sawdust, soil, vegetation, debris, pumped water, hydrocarbon, chemicals, cement, asphalt, etc.) shall be allowed to enter an aquatic habitat or be deposited on undisturbed lands unless the said lands are part of the project works and approved for temporary waste storage.
6.36. Construction, trade, hazardous waste and domestic waste materials shall not be burned, buried or discarded at the construction site or elsewhere in WLNP. These wastes shall be contained and removed in a timely and approved manner and disposed at an appropriate waste landfill site located outside WLNP.
6.37. Construction waste storage containers, shall be emptied when 90% full. Waste containers will have lids, be wildlife proof if containing attractants, and waste loads shall be covered while being transported.
6.38. Sanitary facilities, such as a portable container toilet, shall be provided and maintained in a clean condition. Sanitary facilities must be in good condition, and located away from sensitive resources including water bodies.

Air Quality Mitigations

6.39. Diesel equipment used on the project shall be fuelled with low sulfur diesel fuels and shall conform to local emission requirements.
6.40. Minimize idling of engines at all times.
6.41. Schedule dust generating activities during periods with lower wind speeds.
6.42. Ensure fine materials being transported are covered and protected.

Cultural Resources

6.43. All work in WLNP is subject to the accidental finds clause whereby on finding any unexpected Cultural Resources, workers shall stop work in the immediate area and notify the SO. Parks Canada's Terrestrial Archaeology section will provide advice and assessment of significance and determine requirements to mitigate the chance find. Examples of archaeological artefacts encountered in WLNP include buried bison bones, stone tools, and above ground cairns.

6.44. If applicable, follow additional mitigations outlined in the Cultural Resources Impact Assessment.

	Required	Location(s)	Notes
Are additional mitigations for cultural resources required?	☐		No additional mitigations for cultural resources required. Accidental Finds Clause applies.

7. Vegetation Removal Mitigations Module

Project activities that may alter or remove vegetation include mowing, brushing, and landscape maintenance activities, non-native species management, fire hazard reduction and prescribed burn operations and pre-construction site clearing. Grubbing (stump and root removal) may be required to prepare the ground surface for other activities.

Wildlife Timing Windows

All vegetation, including grassland, has the potential to provide habitat for wildlife. Applicable timing windows for individual project vegetation removal is listed under the **General Activities Mitigations Module**.

7.1. The regional bird/songbird nesting period in WLNP is **April 1 to August 31**. Avoid all vegetation removal during this time. If vegetation removal is scheduled to occur within this period, the SO may complete pre-work surveys for nesting migratory birds. See **Appendix 1** on regulatory guidance for further detail on the MBCA and SARA.

- Nesting surveys must be completed within 7 days of project activities.
- There is a **risk of delays** to project activities due to the presence of nesting migratory birds.
- If a nest is found during the pre-work surveys, the vegetated area will be left intact with a suitable sized protected buffer until the young have left the nest and vicinity. Size of buffer is species dependent, to be determined by the SO in consultation with federal regulatory guidance.

7.2. Vegetation clearing can negatively impact bats in spring and summer. The timing windows for avoidance of vegetation removal activities in WLNP is April 1 to August 31 for vegetation likely to support roosting bats. If vegetation removal is scheduled to occur within this period, the SO may complete pre-work surveys for bat roosts.

- Roosting surveys must be completed within 7 days of project activities.
- There is a **risk of delays** to project activities due to the presence of bat roosts.
- If a potential bat roost is located, a site-specific mitigation strategy must be developed dependent on the type of roost and species present, to be determined by the SO in consultation with federal regulatory guidance.

7.3. Vegetation removal can negatively impact amphibians and reptiles, especially during breeding, transformation and important movement periods within and close to wetlands.

- If vegetation removal is to occur within 300 m from a confirmed or potential amphibian breeding wetland, or within 500 m from a confirmed SAR amphibian breeding wetland, additional impact analysis is required and site-specific mitigations developed.
- If vegetation removal is scheduled to occur during non-frozen conditions, the SO may complete an amphibian and reptile ground search immediately prior to equipment activities.
- If ground disturbance activities are scheduled to occur in frozen conditions, amphibian exclusion fencing may be required in the preceding fall season at the discretion of the SO.

Other Timing Considerations

7.4. Where ground disturbance accompanies vegetation removal, time activities to minimize soil handling, soil compaction, and erosion potential. Avoid extreme dry windy and wet conditions.

7.5. In areas with weed infestations, reduce weed spread through vegetation removal prior to seed set.

Vegetation Removal Mitigations

7.6. If previously unidentified sensitive features are found during construction, immediately stop work and notify the SO (e.g., raptor nest).

7.7. Vegetation removal should be limited to the minimum area required for safe operations during construction or to meet the objectives of the clearing activities (i.e., fire breaks, sight lines etc.).

7.8. Minimize full removal and retain vegetation when possible to reduce erosion.

7.9. Retain 30 metre vegetated buffer around sensitive features; where disturbance is unavoidable < 30 metres, a restoration plan is required and the SO must be on site during disturbance activities.

7.10. Do not deposit debris in water bodies.

7.11. Limbing must be completed using the appropriate equipment to minimize damage to the tree (i.e., using a hoe bucket to limb trees is not appropriate as it can cause the bark to tear and can make the remaining tree vulnerable to diseases and rot).

Tree removal

7.12. Safety of workers and the public is the first priority for all tree removal operations. In consultation with the SO, felling of snags or hazard trees outside the designated work area may be permitted, where required for safety of fellers.

7.13. Unless approved by the SO due to site-specific limitations be felled away from sensitive features, such as watercourses, wetlands, riparian zones, or ecological features.

7.14. Ensure tree limbs/stumps are flush cut as close to the ground or stem as possible.

7.15. Fallers should assess each tree individually for critical wildlife features such as nests or cavities. Notify the SO if unexpected features are identified.

7.16. Mechanical falling can be used where it is determined that machines will cause minimal site degradation, due to suitable soil conditions, or on a site that is to be developed for future access or facilities.

7.17. Mechanical falling may be preferable on sites with numerous hazard trees to be retained for their habitat values, or where mechanical falling equipment can be used

to minimise soil disturbance and better direct fallen trees away from environmentally sensitive areas.

7.18. Logs and other salvage materials are to be conveyed to and placed at a storage site without spread of debris or damage to other standing trees or landscape resources outside the marked clearing or storage limits. They shall not be skidded through wetlands, waterways or water bodies.

7.19. During the grubbing component, stumps, roots, imbedded logs and other non-soil debris shall be pulled and shaken free of loose soil and rocks before transport.

7.20. Where possible, preserve identified wildlife trees by limbing or topping if they are not assessed as hazard trees.

Disposal of Vegetation Debris

7.21. Where practicable, as much of the coarse woody debris and organic matter from the tree removal should remain on the site and used in restoration. The quantity and distribution of slash remaining must not impede wildlife movement, choke out native vegetation, create a significant fire hazard or cause an excessive nutrient flush.

7.22. All debris that is not being disposed of on-site must be removed as soon as possible from the project footprint, by transporting off-site for disposal.

7.23. If temporary storage is required, store debris on already disturbed areas to minimize footprint of disturbance.

7.24. All vegetation containing non-native species will be bagged and removed off site to disposal facility.

7.25. On approval of the SO, vegetation debris may be taken to the WLNP burn pile at the upper government compound provided all materials are transported, placed and sorted according to current WLNP requirements.

7.26. If removal is not feasible a chipper may be used for less than 50 boles per hectare. Chip depth is to be a maximum of 5 cm (2 inches), spread over area no greater of 5m x 5m per hectare so as to not cover underlying vegetation, prevent new native seedlings from sprouting, and cause soil/seed bank sterilization. Spreading of chips may extend beyond these parameters with approval by the SO.

7.27. Firewood must be salvaged and bucked and stacked at the government compound.
- Firewood Tree: one that has a minimum diameter off 15 cm outside bark at stump height (30 cm) and a usable length of 4.88 m to a 10 cm diameter (inside bark).
- Fire Piece: One that is 2.44 m (plus 5 cm trim allowance) or longer, with a 10 cm (inside bark) small end, where rot content or form does not render it unusable.

Pile Burning (PCA Prescribed Burn Operations)

7.28. No burning of materials is permitted by non-PCA contractors.

7.29. Piles will be made where trees are felled, piles will be 1.2-1.8 (4 to 6 feet) in diameter and no more than 1.2 m (4 feet) high (approximately 1 to 3 trees per pile) or as outlined in an approved Burn Plan.

7.30. Piles are to be located so that they do not scorch surrounding live trees and measures must be in place to ensure that fires do not spread (i.e., conduct burning on snow or on mineral soil).

7.31. Piles will be left until fall for burning to allow for curing of green fuels.

7.32. Provincial regulations for air quality must be met.

7.33. Where fire fuel loading is not a concern, vegetation debris of limited amounts will be dragged in the forest to mimic natural tree fall. Materials will not be dragged through wetlands or other sensitive features.

Herbicide Use

7.34. A Field Unit Integrated Pest Management Plan (IPMP) must be completed and approved prior to the use of herbicides to ensure the most effective and least harmful substances are properly used.

8. Soil Handling Mitigations Module

To successfully complete restoration of disturbed areas, and protect areas from erosion, proper soil handling and backfilling procedures must be followed. Post excavation and stripping soil and vegetation restoration mitigations should be applied. See Section 10 of this BMP for **Soil and Vegetation Restoration**.

8.1. All soil handling activities require consideration of erosion and sediment control. **See ESCP Section**.

Soil Stripping

8.2. No stripping shall occur outside of the delineated work area or within 1 metre of the drip line of existing forest.

8.3. Stripping close to any watercourse, water body or wetland shall employ methods to ensure materials are not pushed, do not fall or erode into the water or wetlands.

8.4. Soil must be stripped in accordance with the **ESCP**. Key components for soil stripping are:

- Minimize soil movement and handling at all times.
- Strip topsoil under dry conditions, whenever possible.
- In the event of a work program shutdown during inclement weather (e.g. winter conditions unfavourable for construction, heavy rain events, construction delays, etc.) contingency planning for bared soils or excavated material stockpiles is required.

Topsoil Salvage

8.5. Salvage topsoil at all excavation sites for restoration purposes.

8.6. Prevent loss of topsoil through wind or water erosion.

8.7. Usually the upper 15 cm of soil, below the sod layer if present, is considered topsoil, where topsoil depths exceed 15 cm then salvage the entire depth of topsoil.

8.8. Where depths exceed 15 cm, salvage the upper 15 cm of topsoil separately from the remaining, where the seedbank is filled with desirable native seed material.

8.9. The SO may designate separate storage of topsoil zones whereby forest soils are stored separately from grassland soils and weed contaminated soils are separated from clean topsoil.

Excavation

8.10. All trenches or ditches left unattended overnight must be fenced or covered to prevent wildlife entrapment or provide appropriate egress for wildlife.

8.11. Workers must inspect trench for trapped wildlife prior to backfilling. If trench has been left open for > 24 hours, SO must be notified and time allowed for the SO to complete additional inspection for trapped wildlife such as salamanders.
8.12. Materials shall be placed at storage sites or on the grade without spillage outside the working limits. Any material inadvertently falling outside the work limits is to be removed promptly in a manner that does not damage trees or vegetation.
8.13. Special precautions may have to be taken during excavation in the vicinity of intermittent or active drainage channels.
8.14. Minimize changes to the ground surface that affects its infiltration and runoff characteristics and maintain/re-establish effective surface drainage on completion of the project.
8.15. Backfill and compact excavations as soon as possible. Optimize degree of compaction to minimize erosion and allow for re-vegetation.
8.16. To limit over compaction, use equipment which minimizes surface disturbance including low ground pressure tracks/tires, blade shoes and brush rake attachments.
8.17. All excavations will remain free of water (see **dewatering mitigations**).

Excavated Material Storage

8.18. Allow space for separate storage of topsoil and spoil; where space is available, separate stored topsoil from spoil by at least 1 m. Use appropriate material (e.g., geo-textile) to separate soil components where space is limited.
8.19. Topsoil from separate ecotypes or areas of the project may not be mixed without approval of the SO (i.e., grassland soils must be kept separate from forested soils).
8.20. Topsoil may be stored on hardened surfaces, geo-textile material, in topsoil storage containers or directly on undisturbed vegetation. If storage occurs on vegetation, material recovery by hand may be required.
8.21. Topsoil should be stockpiled on the uphill side of the disturbance on sloped terrain and away from any grades, subsoils, spoil material, construction activity and day to day operations.
8.22. Construct barricades to prevent losses on steep terrain (>18°, 3:1).

Excess Materials and Waste (Overburden Removal)

8.23. Remove excess excavated material from site where it cannot be used for the final grading of the area. Site specific arrangements must be made for disposal locations and procedures of overburden.
8.24. Surplus excavated material may be used to fill depressions around the project site providing topsoil is stripped before filling, with approval from SO.

9. Soil and Vegetation Restoration Mitigations Module

Almost all projects activities included in this BMP will require some ecological restoration- *the process of assisting the recovery of an ecosystem that has been degraded, damaged, or destroyed*. The restoration plan can be a simple application of the following mitigations and can be at the site or both at the site and in concert with another site designated to offset the permanent impact of a project. A restoration plan is required for all projects but the scale and scope can be adapted to that required by the project (i.e., BMPs, site restoration plan, etc.). Restoration works can often be considered projects in and of themselves. Soil and vegetation restoration must apply the principles of effective, efficient and engaging solutions.

Restoration/Landscape Plan

9.1. Develop restoration plan as part of the project scoping and specifications prior to project approvals.

9.2. Ensure that the appropriate restoration materials are available as needed immediately following construction activities.

9.3. The restoration plan will be subject to the approval of the IAO, who will be responsible for consulting with the Park Vegetation Ecologist.

9.4. The restoration plan should the following minimum information

- Site description;
- Site-specific restoration goals and objectives;
- Schedule of clean-up activities;
- Timing of restoration activities;
- Restoration Standards; and
- Follow-up Protocols (i.e., supplemental seeding, native transplants, weed control, etc.)

Timing Windows

9.5. Complete initial seeding as soon as possible.

9.6. Landscaping activities must be completed as soon as one area or component of a project is completed in order to reduce potential for weed infestation in exposed areas. This includes disturbed areas that may require future project works; temporary landscaping is required to mitigate potential for weed infestation in exposed areas.

9.7. Supplemental planting should be timed for the species and location. Seeding in the fall allows for full scarification of the seed over the winter. Consider using seed that requires shorter scarification times for spring and summer applications. Transplants may do best in the spring and summer and can require watering or other maintenance.

9.8. Time weed control measures to prevent seed propagation.

Topsoil Replacement

9.9. Implement restoration plan for the disturbed area immediately following completion of construction.

9.10. Minimize soil movement and handling to protect existing native seed bank.

9.11. Replace topsoil to all areas immediately following fine grading.

9.12. Do not compact topsoil.

9.13. Backfilling should allow settling to prevent depressions however, long term roach piles on linear disturbances should be minimal.

9.14. Where insufficient topsoil is available, the SO may approve moving soil from different projects or areas of WLNP. Imported soil may be used as a last resort and must be from a supplier that has been inspected and approved by the Park Vegetation Ecologist. Methods of improving vegetation succession using locally sourced, weed and contaminant free materials are preferred.

9.15. Slopes to be seeded should be no steeper than 2 horizontal to 1 vertical (2:1) and covered with a minimum of 5 cm (2 inch) of topsoil. Finish grading should always follow top soil placement. Maintain structure (i.e., rocks, roots, woody debris) in topsoil.

9.16. Where remaining soils are unstable due to steepness or soil characteristics, immediate installation of sod or other erosion control is required.
9.17. Methods of bioengineering such as terracing, willow staking, live pole drain systems should be assessed as solutions where soils are steeper or remain unstable.

Soil Amendments

Fertilizer Application

9.18. Avoid use of fertilizer to limit non-native vegetation growth and allow for local species to use available nutrients.
9.19. If needed use locally sourced mycorrhizae compost teas to improve vegetative success, as approved by WLNP vegetation ecologist.

Topsoil substitute

9.20. Apply an organic cellulose only amendment as a soil substitute if restoration standards are not being met within the defined time frame.
9.21. Determine the type of organic amendment based on the site-specific requirements (e.g., peat moss, compost) at the discretion of WLNP vegetation ecologist.

Seedbed Preparation

9.22. The seedbed will be scarified by hand or, with the approval of the SO, by machine on large areas (i.e., roadbeds) where it is accessible and appropriate.
9.23. The seedbed will be scarified if seeding takes place more than 7 days after final grading or if there has been a rainfall between final grading and the seeding date.
9.24. The cleats of a tracked vehicle or a harrow device will be used, where possible, to prepare an adequate seedbed with seedling safe-sites (microsites) substantially free of soil crusts.
9.25. Align cleat marks at right angles on slopes to trap seed and sediment and reduce erosion.

Species Selection

9.26. When selecting species and varieties:

- Use species of local native plant communities.
- Avoid use of cultivars.
- Species viability in proposed environment and climatic conditions.
- Capability to effectively control erosion, where required.
- Adaptation to the variable site conditions of undulating topography.
- Consider palatability of some species to herbivores and avoid growing attractants in areas of increased risk to wildlife and visitors.
- Variable life expectancy to produce variable, delayed die-out of seeded species and replacement with indigenous native plants.

Seed Mix Selection

9.27. Prescriptive seed mixes are provided in **Appendix 4**. If an appropriate seed mix is not available, the SO will contact the Park Vegetation Ecologist to determine an appropriate mix for the Project.
9.28. Percentage of individual species within mixes are approximate and may vary depending on seed availability. A number of native species that are available only in limited quantities commercially have been included in the seed mixes. These seed

mixes are to be used conditional on availability of individual species; modifications/replacements are allowed, subject to approval by the WLNP Vegetation Ecologist.

9.29. Prior to seed purchase, certificates of seed analysis will be provided to the Vegetation Ecologist for approval.

- Do **NOT** purchase seed until written approval is obtained.
- Certificates of Analysis must include both the common and include the scientific name following the CANADENSYS nomenclature system; indicate if the seed is a cultivar, ecovar, or wild native; geographic origin (seed source); date of collection; method of seed storage; germination, viability and vigour; and indicate all other species occurring including agronomic, weed, and native species; and date of the analysis. The contact information for the Seed Supplier will be included.

9.30. All seed is subject to testing by PCA prior to use.

Seeding

9.31. Use only seed purchased after written approval is obtained.

9.32. Seed and stabilize (e.g. mulch/tackifier) bare areas as soon as possible after disturbance, preferably as soon as a significant area is graded and finished and before the next rain event. If there is a risk of seedling mortality as a result of fall frost stabilize until appropriate growing conditions exist.

9.33. In previously disturbed lawn areas of the Waterton Community, consider using sod in high traffic areas or places that need extra erosion control.

9.34. Use temporary seeding when outside the seeding dates for permanent vegetation.

9.35. Apply a seed mixture which is appropriate for the climate, soil, and drainage conditions of the site.

9.36. Apply seed at a rate appropriate to the seed mixture, seeding method and existing vegetation conditions.

9.37. Conduct broadcast seeding under calm wind conditions. Hydro-seeding is acceptable where access is available.

9.38. Do not increase the seeding rate to compensate for poor seedbed conditions.

9.39. Monitor temporary erosion control measures to prevent seed loss.

9.40. Supplemental seeding may be required in subsequent years.

Alternatives to Seeding

9.41. Use topsoil seed bank in small areas when there is no risk of erosion or competition from invasive species (i.e., natural regeneration).

9.42. Use native transplants in areas where conventional seeding applications are not applicable or where slope stability is an issue.

9.43. Use native transplants to provide additional diversity and structure to supplement seeding.

9.44. Use conventional forestry planting methods for container grown transplants, see **website** for guidance.

10. Slope Stabilization, Drilling and Blasting Mitigations Module

Where standard excavation is not sufficient, scaling, hydraulic hammers, drilling units or trim blasting are used to break up rock or soil for removal. Accumulations of debris in ditches reduce

their effectiveness at trapping rock fall and reduce public safety. Ditches will be cleaned using a loader and back hoe. Guardrails and rock fences may be temporarily removed to permit this activity.

Timing of Works

10.1. Follow timing windows as specified under the Vegetation Removal Mitigation Module.

Slope Stabilization-Scaling, Hydraulic Hammers

The use of hydraulic hammers attached to excavators is considered the ideal solution for rock disintegration. It avoids rock blasting where the parent rock is no longer rippable by the excavator's bucket but still has enough planes of weakness for economical operation and effective use of the hydraulic hammer. Scaling is the manual removal of loose material on rock slopes using pry bars, hydraulic press, brooms, shovels and power equipment operated by personnel using roped access to a rock face.

10.2. For vegetation clearing refer to the **vegetation removal mitigation module** of this BMP.
10.3. For slope-stabilization in soils, please refer to the **ESCP** and **Excavation** section.
10.4. Measures shall be taken to control dust as much as possible during the removal and falling of rock materials down slope.
10.5. Placement of rip rap and backfill on sensitive features shall be undertaken without contacting the feature, in particular, not be below the High Water Mark.
10.6. If replacement rock reinforcement/armouring is required to stabilize eroding or exposed areas, then ensure that appropriately- sized, clean rock is used, and rock is installed at a similar slope to maintain a uniform bank.
10.7. Direct concentrated surface water (runoff) away from cut and fill slopes.
10.8. Immediately stabilize banks disturbed by any activity associated with the project to prevent erosion and/or sedimentation, preferably through vegetation restoration with native species suitable for the site-refer to **soil and vegetation restoration section** of BMP.

Drilling and Blasting for Slope Stabilization and Geotechnical Investigations

Trim blasting is used for controlled blasts in which explosive charges are placed in predetermined pattern of holes drilled into the rock face and then detonated. Potentially unstable masses of rock can sometimes be stabilized using rock bolts and long steel rods drilled into the rock to bind it together. Drilling is a common method of investigation to obtain geotechnical reports required for engineering design.

Drilling (General)

10.9. The contractor for geotechnical investigations must obtain a Restricted Activity Permit from the IAO prior to the commencement of work (see **Geotechnical** section).
10.10. Debris from drilling will be contained (screened or settle out) so it will not cover the surrounding area or enter any water course. All debris will be removed, see section on **overburden removal** for further mitigations.

10.11. The cuttings from all drilling will be contained so they can be removed entirely from the site. If contaminated, the cuttings are to be disposed at an approved waste disposal facility.

10.12. Control of spoil and sediment loaded water is required on the drill site. Dyking will be required to retain the deposit on non-vegetated surfaces. If contaminated, the spoil pile must be disposed at an approved waste disposal facility.

10.13. During aquifer tests, the water must be piped so it does not erode any soil or any part of the ground. If the water from the tests is piped to a creek, stream, or river, the pipe is to be situated so that there is no erosion of the stream bank or bed. If any sand or similar material is discharged during the aquifer test, care must be taken that the sand does not cover any vegetation.

10.14. All test wells will be filled in after the testing is completed. The proponent will be responsible for rectifying any future problems associated with any of the wells or test wells.

Blasting

10.15. The Parks Canada Representative will identify a magazine location for explosives should a factory site or "ready-to-use" explosives storage site be required

10.16. The blasting supervisor will ensure no damage to infrastructure, people, surrounding vegetation or wildlife by mitigating risk of fly rock.

10.17. Avoid using explosives in or near water. Use of explosives in or near water produces shock waves that can damage a fish swim bladder and rupture internal organs. Blasting vibrations may also kill or damage fish eggs or larvae.

10.18. If explosives are required as part of a project (e.g., removal of structures such as piers, pilings, footings; removal of obstructions such as beaver dams; or preparation of a river or lake bottom for installation of a structure such as a bridge or culvert), the potential for impacts to fish and fish habitat will be minimized by implementing the following measures:

- Time in water work requiring the use of explosives to prevent disruption of vulnerable fish life stages, including eggs and larvae, by adhering to appropriate fisheries **timing windows** under general activities.
- Isolate the work site to exclude fish from within the blast area by using bubble/air curtains (i.e., a column of bubbled water extending from the substrate to the water surface as generated by forcing large volumes of air through a perforated pipe/hose), cofferdams or aquadams.
- Remove any fish trapped within the isolated area and release unharmed beyond the blast area prior to initiating blasting.
- Minimize blast charge weights used and subdivide each charge into a series of smaller charges in blast holes (i.e. Decking) with a minimum 25 millisecond (1/1000 seconds) delay between charge detonations (see Figure 1).
- Back-fill blast holes (stemmed) with sand or gravel to grade or to streambed/water interface to confine the blast.
- Place blasting mats over top of holes to minimize scattering of blast debris around the area.
- Do not use ammonium nitrate based explosives in or near water due to the production of toxic by-products. Remove all blasting debris and other associated equipment/products from the blast area.

10.19. Per Fig. 1:20 kg total weight of charge; 25 msecs delay between charges and blast holes and decking of charges within holes. (Fisheries and Oceans Canada, 2015)

Figure 1 Sample Blasting Arrangement

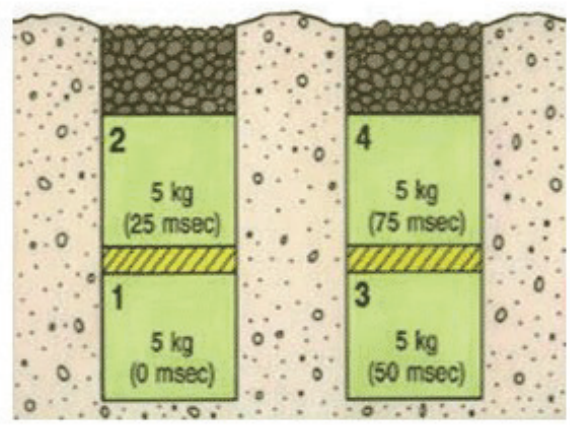

11. Asphalt Production and Handling Mitigations Module

Asphalt is a common building material for transportation infrastructure. Its production requires the use of gravel, water, and petroleum products, and associated project activities include transportation, storage and handling of these materials. Installation of asphalt plants is common within the larger parks where gravel extraction is undertaken.

Timing of Works

11.1. Asphalt works are preferably undertaken during periods of dry weather as this allows easier control of contaminated runoff and sediment.

11.2. If the work schedule requires working in the rain, the area of work must be isolated and appropriate sediment controls must be installed to prevent the release of sediment-laden water or any other deleterious substances into surface waters, particularly for surface repair works requiring the application of patching and sealing compounds, tar, asphalt, and chemical surface sealants.

Gravel Crushing and Washing

11.3. Where possible within engineering constraints, asphalt materials should be recycled to reduce the need for new gravel.

11.4. Gravel will be obtained from an approved operational borrow pit only. For gravel obtained from a borrow pit within a protected heritage place or borrow pit, gravel extraction within the footprint of the disturbed area of the approved operational borrow pit is permitted.

11.5. Gravel will not be crushed within 30 meters of any water body.

11.6. If water for cleaning is extracted from a watercourse, refer to **water withdrawal section** of this BMP.

11.7. If gravel requires washing, the water used will not be returned directly to any watercourse.

11.8. Water free from chemical contaminants will be discharged into ground where further erosion and runoff into surface water is prevented. Discharging into well vegetated ground surface, at a rate which prevents erosion can often provide increased absorption and reduction of sediment load.
11.9. Contaminated water must be treated to meet CCME guidelines or transported outside of WLNP for disposal at an approved facility.
11.10. For waste removed from WLNP a detailed receipt of delivery to an approved facility will be provided to the SO.

Oiling of Truck Boxes

Trucks for hauling asphalt mixture shall have tight, clean, smooth metal beds that have been sprayed with a minimum amount of thin fuel oil to prevent the mixture from adhering and causing waste asphalt.

11.11. Truck boxes may be oiled only when absolutely necessary.
11.12. Oiling will take place in a bermed area, consisting of a plastic underlay with 15 centimetres overlay of clean gravel. Oil contaminated gravel will be hand collected (so as to prevent tearing of the plastic) from the bermed area daily, and put through the asphalt plant.
11.13. Vehicle covers shall be securely fastened.

Disposal and Clean Up of Other Waste Products

11.14. To ensure regular clean-up of waste asphalt and petroleum spills, a defined clean up schedule will be established during the preconstruction meeting.
11.15. Leaks will be collected in drip-trays, the collected material will either be removed from WLNP, or recycled back through the Asphalt Plant. For any material removed outside WLNP to an approved facility, a detailed receipt will be provided to the ESO.
11.16. Used oil, filters, grease cartridges, oil cans and other waste products of plant servicing will be collected and disposed of at the nearest industrial waste facility.

12. Concrete Handling Mitigations Module

Concrete is a common construction material. Its use ensures longevity of the infrastructure and safety for public use. One litre of concrete wash water or leachate in 1000L of water will kill fish. Cement-based products including grouts and concrete are lethal to fish and many other aquatic organisms. Raw product or leachate entering a watercourse will alter water chemistry, making it more basic or alkaline.

Onsite Temporary Concrete Washout Facility

12.1. Temporary concrete washout facilities shall be located a minimum of 100 m from storm drain inlets, open drainage facilities, and watercourses.
12.2. Temporary concrete washout facilities shall be temporary pit or bermed areas constructed and maintained in sufficient quantity and size to contain all liquid and concrete waste generated by washout operations.
12.3. Wood stakes, and sandbag materials can be used to construct temporary containment walls or “barriers”.
12.4. Plastic lining material shall be a minimum of 10-mil polyethylene sheeting and shall be free of holes, tears or other defects that compromise the impermeability of the material.

12.5. The soil base shall be prepared free of rocks or other debris that may cause tears or holes in the plastic lining material.
12.6. Washout of concrete mixer trucks is not permitted in WLNP.
12.7. Wash concrete from mixer truck chutes/pumps into approved concrete washout facility or collect in an impermeable bag for disposal.
12.8. Pump excess concrete in concrete pump bin back into concrete mixer truck.
12.9. Concrete washout from concrete pumper bins can be washed into concrete pumper trucks and discharged into designated washout area or properly disposed offsite.
12.10. Once concrete wastes are washed into the designated area and allowed to harden, the concrete shall be broken up, removed, and disposed of per federal and provincial regulations.

Maintenance and Inspection of Temporary Concrete Washout Facilities

12.11. Temporary concrete washout facilities shall be maintained to provide adequate holding capacity with a minimum freeboard of 100 mm (4 inches) for above grade facilities and 300 mm (12 inches) for below grade facilities.
12.12. Maintaining temporary concrete washout facilities shall include removing and disposing of hardened concrete and returning the facilities to a functional condition.
12.13. Existing facilities must be cleaned, or new facilities must be constructed and ready for use once the washout is 75% full.
12.14. Temporary concrete washout facilities shall be inspected for damage (i.e. tears in PVC liner, missing sand bags, etc.).
12.15. Onsite concrete waste storage and disposal procedures should be monitored at least weekly or as directed by the SO.

Removal of Temporary Concrete Washout Facilities

12.16. Holes, depressions or other ground disturbance caused by the removal of the temporary concrete washout facilities shall be backfilled and restored.

Onsite Concrete Management

12.17. Rolling concrete mixers with surplus concrete in amounts less than one cubic metre of wet concrete may waste this concrete in a right-of-way as directed by the SO in areas that drain well away from watercourses. Surplus amounts in excess of one cubic metre are to be returned to the batching yard.
12.18. Water contaminated in the placing of cement and curing of concrete shall be contained and removed from the site to an approved disposal facility.
12.19. The concrete batching plant must be operated pursuant to applicable dust, air emission, and water quality control regulations.
12.20. Waste, solidified concrete from rolling concrete mixers in amounts less than 1 cubic meter and waste solidified concrete from construction pour shall be buried in the grade within 48 hours of the pour, or removed from the site subject to approval and direction from the SO.

13. Paving, Resurfacing, Grading Mitigations Module

Surface management activities are undertaken to ensure public safety on PCA surfaces by maintaining clean, level, and unbroken road surface conditions through activities such as pavement cleaning, patching, application of surface treatments, and pavement crack sealing.

Grading is used to address drainage issues, vegetation encroachment, potholes and rough surfaces.

Timing of Works

13.1. Works are preferably undertaken during periods of dry weather (e.g., summer) as this allows easier control of contaminated runoff and sediment.

13.2. If the work schedule requires working in the rain, the area of work must be isolated and appropriate sediment controls must be installed to prevent the release of sediment-laden water or any other deleterious substances into surface waters, particularly for surface repair works requiring the application of patching and sealing compounds, tar, asphalt, and chemical surface sealants.

Grading

13.3. During grade construction conducted close to any watercourse, water body or wetland ensure materials are not pushed, fall or are eroded into the water or wetlands.

13.4. No grade building shall occur outside of the delineated work area or within 1 metre of the drip line of existing forest. Any material inadvertently falling outside the work limits will be removed promptly in a manner that does not damage trees or vegetation.

13.5. Materials shall be placed at storage sites or on the grade without spillage outside the work limits. Any material inadvertently falling outside the work limits will be removed promptly in a manner that does not damage trees or vegetation.

13.6. Retain a 30 metre vegetated buffer around water bodies or install runoff management structures.

13.7. If possible, grade roads early in the spring before vegetation develops seed heads or late in season after vegetation has set seed and is dormant to minimize non-native vegetation propagation.

13.8. Ensure gravel or road bed material is free of weeds and comes from an approved operational gravel source free of other contaminates.

Paving and Resurfacing

13.9. Minimize changes to the surface that could affect infiltration and runoff characteristics and maintain effective surface drainage to limit direct runoff into surface waters.

13.10. Minimize application of seal coats in wet conditions. Attempt to apply only to dry surfaces and not prior to (within 24 hrs.) or during rainfall. If unforeseen rain arrives ensure runoff from recently seal coated surfaces are prevented from entering surface waters.

13.11. For asphalt handling and management see the **Asphalt Mitigation Module** of the BMP.

Pavement Marking and Barrier and Guardrail Reinstatement

13.12. Minimize changes to the surface that could affect infiltration and runoff characteristics and maintain effective surface drainage to limit direct runoff into surface water Pavement marking shall be undertaken pursuant to standard methods applied in National Parks for control of paint products, both in transport and handling. The Contractor shall present a description of methods to be employed for transporting and controlling paint and hazardous products, application of paint,

cleaning of equipment, containment and disposal of waste paint and cleaning products, etc. to the satisfaction of the SO.

13.13. Where concrete barriers or guard rails are temporarily removed, for highway improvements, temporary glow posts shall be installed, at 20.0 m intervals on straight sections and at 10.0 m intervals on curves and shall remain in place until permanent barrier system has been installed.

14. Drainage Structures Mitigations Module

Drainage structures on roadway, highway and parkways are structures such as culverts, ditches and drains. Drainage structure management activities are undertaken to ensure that surfaces are safe and efficiently drained, water is efficiently channeled to ditches and watercourses, and erosion of highways and adjacent properties is prevented. These mitigations include the cleaning and maintenance of drainage structures and related hardware, as well as the repair or replacement of existing and installation of new drainage structures.

14.1. All workers shall be familiar with the **Spill Response Section** of this document.

Timing of Works

14.2. Time work in water to respect **timing windows** to protect fish, including their eggs, juveniles, spawning adults and/or the organisms upon which they feed. Contact your local aquatics specialists and DFO offices for further information on **timing windows** in your region.

14.3. Conduct in-stream work during periods of low flow, to further reduce the risk to fish and their habitat or to allow work in water to be isolated from flows.

14.4. If the work schedule requires working in the rain, the area of work must be isolated and appropriate sediment controls installed to prevent the release of sediment-laden water or any other deleterious substances into surface waters.

Drainage Structures

14.5. Isolate your work area from any flowing water that may be present. Ensure any flows are temporarily diverted around the portion of the ditch or watercourse where you are working.

14.6. Select appropriate equipment and work access routes to reduce damage to riparian vegetation and watercourse banks when using earth-moving equipment.

14.7. For smaller scale debris and sediment removal activities, remove materials by hand.

14.8. To assist with bank stability and invasive plant prevention, leave topsoil and root systems intact on channel banks surrounding your work area.

14.9. Ensure any works to repair damaged structures retain the pre-repair channel conditions (e.g., streambed profile, substrate, channel cross section) and do not constrict the stream width.

14.10. Maintain effective sediment and erosion control measures until complete re-vegetation of disturbed areas is achieved.

15. Water Withdrawal and Dewatering Mitigations Module

Construction often requires the use of water; many common methods of excavation and site isolation require dewatering. Temporary, short term water withdrawal provides an efficient uncontaminated water source for local project sites. Dewatering can allow sites to be effectively

dry during construction, reducing the impact of sediment laden water entering fish bearing waters.

Additional Permits

15.1. All water withdrawal requires a Restricted Activity Permit issued by the IAO.

Equipment Cleaning

15.2. All hoses, pumps, intake hoses, or equipment from outside of WLNP must be clean and dry on arrival and require approval and inspection by the SO prior to use in WLNP (see **General Activities Section**).

15.3. Do not bring equipment into WLNP from areas that have known infestations of aquatic invasives (e.g., USA, east of Saskatchewan).

15.4. Thoroughly clean water trucks, hoses, pumps and intake hoses using clean HOT WATER with as much pressure as possible.

15.5. If last use of equipment was out of province, allow hoses, pumps and intake hoses to dry completely and then remain dry (ideally for >20 days).

Timing Windows

15.6. As a general guide to prevent taking more water than aquatic system can support, limit total take of water to less than 5 successive days and less than 10 days in any period of 30 days.

15.7. Do not withdraw water from waterbodies that support breeding amphibians.

Water Withdrawal

15.8. Water should not be withdrawn from a wetland or stream less than 2 metres wide at the surface or a lake less than one hectare in area.

15.9. Water withdrawal should follow the 10/90 rule which allows for up to 10% of the stream flow to be withdrawn, as long as the stream flow does not fall below the 90% exceedence flow (eg.1 in 10 chance in a given year).

15.10. No permanent or semi-permanent works for water withdrawal should be placed in the stream channel.

15.11. Screen any water intakes or outlet pipes to prevent entrainment or impingement of fish, amphibians and/or reptiles. Entrainment occurs when a fish or amphibian is drawn into a water intake and cannot escape. Impingement occurs when an entrapped fish, reptile or amphibian is held in contact with the intake screen and is unable to free itself.

Pump Screens

15.12. Fish-bearing waters design and installation of intake end-of-pipe fish screens:

- Locate screen in areas and depths of water with low concentrations of fish throughout the year away from natural or artificial structures that may attract fish that are migrating, spawning, or in rearing habitat.
- Orient the screen face in the same direction as the flow of water.
- Ensure openings in the guides and seals are less than the opening criteria to make “fish tight”.
- Screens should be located a minimum of 300 mm (12 in.) above the bottom of the watercourse to prevent entrainment of sediment and aquatic organisms associated with the bottom area.

- Provide structural support to the screen panels to prevent sagging and collapse of the screen. Large cylindrical and box type screens should have a manifold installed to ensure even water velocity distribution across the screen surface. The end of the structure should be made of solid materials and the end of the manifold capped.
- Heavier cages or trash racks can be fabricated out of bar or grating to protect the finer fish screen, especially where debris loading (woody material, leaves, algae mats, etc.) is a concern. A 150 mm (6 in.) spacing between bars is typical.
- Provision should be made for the removal, inspection, and cleaning of screens.
- Ensure regular maintenance and repair of cleaning apparatus, seals, and screens to prevent debris fouling and impingement of fish.
- Pumps must be shut down when fish screens are removed for inspection and cleaning.

Dewatering

15.13. A site specific dewatering plan is required be provided before commencing a pump-out sump to dewater excavation sites with specific details on how and where the water will be discharge.

15.14. Site specific mitigations may be required depending on the conditions of the discharge area, freezing conditions operation, overflow avoidance, decanting and settlement pond restoration.

15.15. Water containing suspended materials shall not be pumped into watercourses, drainage systems or on to land, except with the permission of the SO.

15.16. Soil and vegetation erosion protection is required for water pumped on to land.

16. Buildings & Structures

These mitigations are currently in development. Consult with the IA Office for more information.

General Activities

16.1. As appropriate for project activities, a Phase I Environmental Site Assessment and/or hazardous material survey must be completed by qualified personnel. Mitigations to safely and effectively manage any impacts of hazardous materials on people or the environment will require additional project planning (e.g., asbestos, ground contamination).

16.2. If building systems will incorporate glycol or antifreeze, ensure design includes containment and spill response plan. If risk to aquatic habitat cannot be mitigated, use alternative system.

16.3. Refer to **Section 2, Project Planning and Design** for addition mitigations related to building design.

16.4. Be aware that high winds are common in WLNP and all materials need to be secured to prevent materials from blowing off site, particularly during high risk activities such as roofing.

Wildlife & Structures - Bats

Resident bats in southwest Alberta include Little Brown Myotis (*Myotis lucifugus*), an Endangered species on Schedule 1 of the *Species at Risk Act* (SARA) that is often associated with

buildings. Project proposals that include building renovation, refurbishment, relocation, and demolition have the potential for adverse effects on this listed species of risk.

16.5. Buildings require a Bat Building Evaluation to determine the potential use at the building (i.e., none, day roost, night roost, maternity roost, or hibernacula). Results of the evaluations are used to determine the appropriate site-specific mitigations and prevent any residual effects of Project activities on Little Brown Myotis or other bat species.

16.6. Identify adjacent natural or artificial roosts that can be avoided or maintained during the Project.

16.7. Reduce light trespass from buildings and in natural areas or corridors bats may use to travel from roosts to water (see **Section 2, Project Planning and Design**).

16.8. Maintain the properties and characteristics of a structure that make it attractive to bats and where feasible, allow them to continue roosting at the structure. Where not feasible, a site specific mitigation plan is required.

16.9. Structures and buildings provide nesting and roosting habitat for wildlife including Cliff Swallows and Little Brown Bats. See timing windows under the **General Activities Mitigations Module**. If work must occur in the restricted timing window, the SO may complete preconstruction surveys to determine if activities may proceed.

- There is risk of **DELAY** to project activities if work is scheduled within restricted windows.

Ground Thawing

16.10. If ground must be thawed to allow excavation, activities related to generators, fuel stations, and antifreeze/glycol must be included in Spill Response Plans.

Foundation

16.11. See Section 13, **Concrete Handling**.

17. Geotechnical

Refer to the **National Best Management Practices for Geotechnical Investigations.**

17.1. The contractor for geotechnical investigations must obtain a Restricted Activity Permit from the IAO prior to the commencement of work.

17.2. Prior to work in the Park, arrange environmental briefing and equipment inspection with the SO. Work vehicles and equipment will arrive in WLNP clean of organic material.

18. Service Line HDD

18.1. For directional drilling operations, a drilling plan will be developed by the contractor, addressing mud systems and handling, and contingency measures for circulation losses or dewatering of excavations.

18.2. All mud containment structures must be situated outside of sensitive features.

18.3. All drill mud must be disposed of appropriately off site.

18.4. Use of methanol or ethylene glycol is not permitted. Propylene glycol may be permitted with review of the drill operation and drill plan by the SO. Consistent with spill plan requirements, all containers must have original labels.

18.5. Schedule drilling operations outside repeated days of cold weather (below -20°C).
18.6. Drill mud containment and frac-out response materials and equipment must be immediately available on site during operations (e.g., vacuum truck, sandbags, spill response equipment).
18.7. The Prime Contractor is responsible for completing regular and scheduled visual checks for frac-outs (*i.e.* frac walks).

Appendix 1 Regulatory Guidance

Jurisdictions

While all projects on lands managed by Parks Canada must adhere to Federal law and regulation, it is considered best practice to refer to local community, regional, provincial regulation and best practices where federal guidance is silent and/or attempt to meet those targets if it can reduce the overall impact of the project.

Some of the project activities reviewed have potential environmental impacts that are addressed by various provincial, federal and territorial acts and regulations. All activities must meet current environmental law and regulations in their design and construction. The following is a brief description of some of the key federal acts and regulations. Further review, understanding and application of other federal, provincial and territorial environmental laws are part of a rigorous approach to project planning and execution.

Canada National Parks Act and Regulations-Parks Canada

All work inside National Parks and Protected Areas must be performed in accordance with the laws and regulations set out in the *Canada National Parks Act* and Regulations. This includes the requirement for most activities described to only be done under a permit such as: business licence for contractor, disturbance of natural objects, travel in restricted areas, special events or use of disposal sites.

Fisheries Act - Fisheries and Oceans Canada

If a project is to be conducted near water, it is the proponent's responsibility to ensure they avoid causing **serious harm to fish** in compliance with the ***Fisheries Act***. The **advice in on the Fisheries and Oceans website** will help a proponent avoid causing harm and comply with the Act.

If the water body in the project area has fish or is connected to waters at any time that have fish the project must meet the **self-assessment criteria on the Fisheries and Oceans website**, if not a project review can be made by Fisheries and Oceans Canada to assess whether the project requires authorization or authorization can be requested directly. Given the level of detail required for a review and/or authorization request the EIA officer may need to consider a more involved EIA pathway in those circumstances.

Migratory Bird Convention Act – Environment Canada

The purpose of this Act is to implement the Convention by protecting and conserving migratory birds - as populations and individual birds - and their nests. Section 6 - prohibits the disturbance, destruction, or taking of a nest, egg, or nest shelter of a migratory bird.

In Canada, the general nesting period may start as early as mid-March and may extend until end of August. This is a general nesting period that covers most federally protected migratory bird species. This period varies regionally across Canada mainly due to differences in species assemblages, climate, elevation and habitat type. Generally, the nesting period is delayed in more northerly latitudes, corresponding to vegetation development and food availability. (Environment Canada, 2014). To help with determining regionally relevant periods where nesting is likely to occur, Environment Canada is publishing estimated regional nesting periods within large geographical areas across Canada referred as "nesting zones". These periods are estimated for each zone and consider the time of first egg-laying until the young have naturally

left the vicinity of the nest. Field Units may wish to refine this section and add their known local nesting periods.

Species at Risk Act

If a species listed under the *Species at Risk Act* (SARA) is found within the project area, any potential adverse effects from the proposed project to the individuals of the species, their residences and/or their critical habitat must be understood. Species at risk considerations require specific expertise, due to additional legal requirements under the SARA and CEAA 2012. If the projects or activities to be addressed by the BMP could affect a listed species or its critical habitat, the EIA officer may need to consider a more involved EIA pathway in those circumstances.

Appendix 2 Species at Risk Critical Habitat

This section is in development. Contact the Impact Assessment Office for more information.

Defined critical habitat maps exist exists for Bolander's Quillwort and Half-moon Hairstreak.

Contact the Impact Assessment Office for more information, including information regarding other habitats important for species at risk, as well as species at risk without defined critical habitat maps to date.

Appendix 3 Recommended Seed Mixes for WLNP

This section is in development. Consult with Vegetation Ecologist prior to use of these mixes

All commercial seed lots will have Certificates of Analysis for weed and undesirable species content and germination tests for each lot of each species in the mix.

Prior to seed purchase, certificates of seed analysis will be provided to the Vegetation Ecologist for approval.

Do NOT purchase seed until written approval for individual lots is obtained.

Certificates of Analysis must include both the common and scientific name following the CANADENSYS nomenclature system; indicate if the seed is a cultivar, ecovar, or wild native; geographic origin (seed source); date of collection; method of seed storage; germination, viability and vigour; and indicate all other species occurring including agronomic, weed, and native species; and date of the analysis. The contact information for the Seed Supplier will be included.

Percentage of individual species within mixes are approximate and may vary depending on seed availability. A number of native species that are available only in limited quantities commercially have been included in the seed mixes. These seed mixes are to be used as possible conditional on availability of individual species; modifications/replacements are allowed, subject to approval by the WLNP Vegetation Ecologist.

Native seed mixes will be seeded within the appropriate areas of WLNP (*i.e.,* open fescue prairie, open deciduous forests with or without a mesic area modifier, etc.).

Inclusion of a clean cover crop (e.g., awned wheatgrass), to combat invasive plant problems may be considered.

Below is an example seed mix. Consult with Vegetation Ecologist for ALL projects, regardless of size, for a site specific and project appropriate mix.

Seed Mix	**Species**	**Species % by Seed Weight**
Aspen / Shrub Community Mix Rate = 40 kg/ha	Smooth wild rye (Elymus glaucus) [1]	25
	Bluebunch wheatgrass (*Agropyron spicatum*) [1]	20
	Foothills rough fescue (*Festuca campestris*) [1]	20
	Idaho fescue (*Festuca idahoensis*) [1]	15
	Mountain Brome (*Bromus carinatus*) [1&2]	10
[1] species for dry open stands	Marsh Reed Grass (*Calamagrostis canadensis*)	40
[2] species for wet or closed stands	Tufted hair grass (*Deschampsia caespitosa*) [2]	40
	Sticky Purple Geranium (*Geranium viscosissimum*)	2
	Northern bedstraw (*Galium boreale*)	2
	Meadow Rue (*Thalictrum occidentale*)	2
	American vetch (*Vicia americana*)	2
	wild strawberry (*Fragaria virginiana*)	2

Appendix 4 List of Non-Native Species of Local Concern

This section is in development and information provided may be incomplete. Contact the Impact Assessment Office for more information.

Table 3 Non-native Species Listed by the *Alberta Weed Control Act*

Common Name	Scientific Name
Prohibited Noxious	
autumn olive	*Elaeagnus umbellata* Thunb.
balsam, Himalayan	*Impatiens glandulifera* Royle
barberry, common	*Berberis vulgaris* L.
bartsia, red	*Odontites vernus* (Bellardi) Dumort
buckthorn, common	*Rhamnus cathartica* L.
cinquefoil, sulphur	*Potentilla recta* L.
crupina, common	*Crupina vulgaris* Pers. ex Cass.
dyer's woad	*Isatis tinctoria* L.
Eurasian water milfoil	*Myriophyllum spicatum* L.
flowering rush	*Butomus umbellatus* L.
garlic mustard	*Alliaria petiolata* (M. Bieb.) Cavara & Grande
goatgrass, jointed	*Aegilops cylindrica* Host
hawkweed, meadow	*Hieracium caespitosum* Dumort.
hawkweed, mouse-ear	*Hieracium pilosella* L.
hawkweed, orange	*Hieracium aurantiacum* L.
hoary alyssum	*Berteroa incana* (L.) DC.
hogweed, giant	*Heracleum mantegazzianum* Sommier & Levier
iris, pale yellow	*Iris pseudacorus* L.
knapweed, bighead	*Centaurea macrocephala* Puschk. ex Willd.
knapweed, black	*Centaurea nigra* L.
knapweed, brown	*Centaurea jacea* L.
knapweed, diffuse	*Centaurea diffusa* Lam.
knapweed, hybrid	*Centaurea × psammogena* Gáyer
knapweed, meadow	*Centaurea × moncktonii* C. E. Britton
knapweed, Russian	*Rhaponticum repens* (L.) Hidalgo
knapweed, spotted	*Centaurea stoebe* L. ssp. *Micranthos* (Gugler) Hayek
knapweed, squarrose	*Centaurea virgata* Lam. ssp. *squarrosa* (Willd.) Gugler
knotweed, giant	*Fallopia sachalinensis* (F. Schmidt Petrop.) Ronse Decr.
knotweed, hybrid Japanese	*Fallopia × bohemica* (Chrtek & Chrtková) J. P. Bailey
knotweed, Japanese	*Fallopia japonica* (Houtt.) Ronse Decr.
loosestrife, purple	*Lythrum salicaria* L.
medusahead	*Taeniatherum caput-medusae* (L.) Nevski
nutsedge, yellow	*Cyperus esculentus* L.
puncturevine	*Tribulus terrestris* L.
ragwort, tansy	*Jacobaea vulgaris* Gaertn.
rush skeletonweed	*Chondrilla juncea* L.
saltcedar	*Tamarix ramosissima* Ledeb.
saltlover	*Halogeton glomeratus* (M. Bieb.) C.A. Mey.
St John's-wort, common	*Hypericum perforatum* L.
starthistle, yellow	*Centaurea solstitialis* L.
tamarisk, Chinese	*Tamarix chinensis* Lour.
tamarisk, smallflower	*Tamarix parviflora* DC.
thistle, marsh	*Cirsium palustre* (L.) Scop.

Common Name	Scientific Name
thistle, nodding	*Carduus nutans* L.
thistle, plumeless	*Carduus acanthoides* L.
Noxious	
baby's-breath, common	*Gypsophila paniculata* L.
bellflower, creeping	*Campanula rapunculoides* L.
bindweed, field	*Convolvulus arvensis* L.
blueweed	*Echium vulgare* L.
brome, downy	*Bromus tectorum* L.
brome, Japanese	*Bromus japonicus* Thunb.
burdock, great	*Arctium lappa* L.
burdock, lesser	*Arctium minus* (Hill) Bernh.
burdock, woolly	*Arctium tomentosum* Mill.
buttercup, tall	*Ranunculus acris* L.
chamomile, scentless	*Tripleurospermum inodorum* (L.) Sch. Bip.
clematis, yellow	*Clematis tangutica* (Maxim.) Korsh.
cockle, white	*Silene latifolia* Poir. ssp. *alba* (Miller) Greuter & Burdet
daisy, oxeye	*Leucanthemum vulgare* Lam.
dame's rocket	*Hesperis matronalis* L.
henbane, black	*Hyoscyamus niger* L.
hoary cress, globe-podded	*Lepidium appelianum* Al-Shehbaz
hoary cress, heart-podded	*Lepidium draba* L.
hoary cress, lens-podded	*Lepidium chalepense* L.
hound's-tongue	*Cynoglossum officinale* L.
mullein, common	*Verbascum thapsus* L.
pepper-grass, broad-leaved	*Lepidium latifolium* L.
scabious, field	*Knautia arvensis* (L.) Coult.
sow thistle, perennial	*Sonchus arvensis* L.
spurge, leafy	*Euphorbia esula* L.
tansy, common	*Tanacetum vulgare* L.
thistle, Canada	*Cirsium arvense* (L.) Scop.
toadflax, Dalmatian	*Linaria dalmatica* (L.) Mill.
toadflax, yellow	*Linaria vulgaris* Mill.

Table 4 List of non-native species of local concern considered invasive in natural habitats.

Common Name	Scientific Name

Appendix 5 Terrestrial Corridor Mapping

This section is in development and information provided is incomplete. Contact the Impact Assessment Office for more information.

WLNP is in the process of identifying key corridor locations. For EIA purposes, corridors will be identified as (1) constricted, (2) priority, or (3) caution. Information and analysis is currently incomplete, however as it becomes available, can be added to BMP.

Zone: Constricted
Identifies important wildlife movement areas that are already known to be significantly constricted by people and infrastructure and natural features and project design should aim to reduce constriction pressure.

- *i.e.,* Prince of Wales hill, corridor around area near emerald bay behind the superintendents house, area above Cameron Falls, Visitor Reception Centre, lower Government Compound, etc.

Zone: Priority

Identifies important wildlife movement areas that are not currently known to be constricted by humans but constricted by human or landscape features and project design should proceed cautiously, reducing constriction pressure where possible.

- *i.e.,* the Dardanelles, west interface of Waterton Townsite, etc.

Zone: Caution

Identifies general areas of wildlife movement where detailed, site-specific analysis should be undertaken.

- *i.e.,* Red Rock and Akamina valleys

Lower Government Compound Area - Constricted

Unrestricted wildlife movement through the Waterton Valley is vital to maintaining local and transboundary wildlife populations in the area of Waterton Lakes National Park (WLNP). This major valley is especially important because of its interface between highly productive, low-elevation grasslands and remote, montane and subalpine habitats. The valley's north-south orientation with several adjoining east-west valleys is also of value to healthy wildlife populations. It is essential for movement of wildlife populations among high quality habitats in Alberta, British Columbia, and Montana. It is also an important link between several *Grizzly Bear Secure Areas* (GBSA) within WLNP. These are areas of high value habitat, minimal human use and sufficient size to support grizzly bears.

The existing lower government compound is located within an area of naturally constricted wildlife movement between the steep slopes of Crandell Mountain and Middle Waterton Lake. This corridor (Crandell Mountain-Middle Waterton Lake corridor) is approximately 330 m wide and is the best option for wildlife to move north-south through the west side of the Waterton Valley (versus via Crandell Mountain itself).

The presence of the existing lower compound, parkway and Kootenai Brown multi-use trail further restrict wildlife movement through this natural pinch point to two narrow areas on the

west side of the compound (narrowest undisturbed area approximately 30 m wide) and along the Middle Waterton Lake shore (undisturbed area = approximately 5 m wide on average - for several weeks per year this movement area is entirely eliminated by high water). Thus, approximately 11% of the width of the Crandell Mountain-Middle Waterton Lake corridor can be considered somewhat passable to wildlife.

To move in any direction through the Crandell Mountain-Middle Waterton Lake corridor, a key point in the valley, wildlife must navigate a high traffic parkway, a day use area, several high use human trails and the government compound, as well as the natural barriers. Preliminary remote camera data indicate that the majority of wildlife use may be concentrated along the west side of the compound, however the Middle Waterton Lake shore is also a key movement corridor. It's effectiveness has been reduced in recent years by removal of trees between the lakeshore and parkway to reduce snow drifting on the parkway.

When conservative disturbance buffers that are well accepted in scientific literature are considered, they virtually eliminate the suitable area for effective wildlife movement through the narrow Crandell Mountain-Middle Waterton Lake corridor. According to recent remote wildlife camera data, several wildlife species are indeed making use of the corridor, but in conservative volumes. For some of the more sensitive species such as grizzly bear, movement through the area might be considered at the cusp of being eliminated by any further disturbance or development; less sensitive species would likely be impacted negatively as well. Current levels of wildlife movement that is taking place can potentially be maintained by not expanding development in the area and improved by restoring key portions of the existing footprint.

If the consultant has any additional questions about this corridor, we could put them directly in touch with Kim Pearson, who is leading the study of wildlife movement through this area, but she will require additional time to provide more specific information.

Additional sensory disturbance including traffic, vehicles, people, noise, lighting etc. adjacent to a wildlife movement corridor can reduce its function. To some extent, these disturbances already exist at the compound, so depending on design, may not be significant effects. Analysis should consider:

- cumulative effects of additional disturbance with other existing activities at the compound (for example, helicopters during busy fire season),
- changes in the extent, location, and pattern of sensory disturbance (for example, current activities occur primarily during office hours, and visitor pressure may potentially extend into the evening)
- loss of natural area in relation to access and egress of wildlife to the known corridor

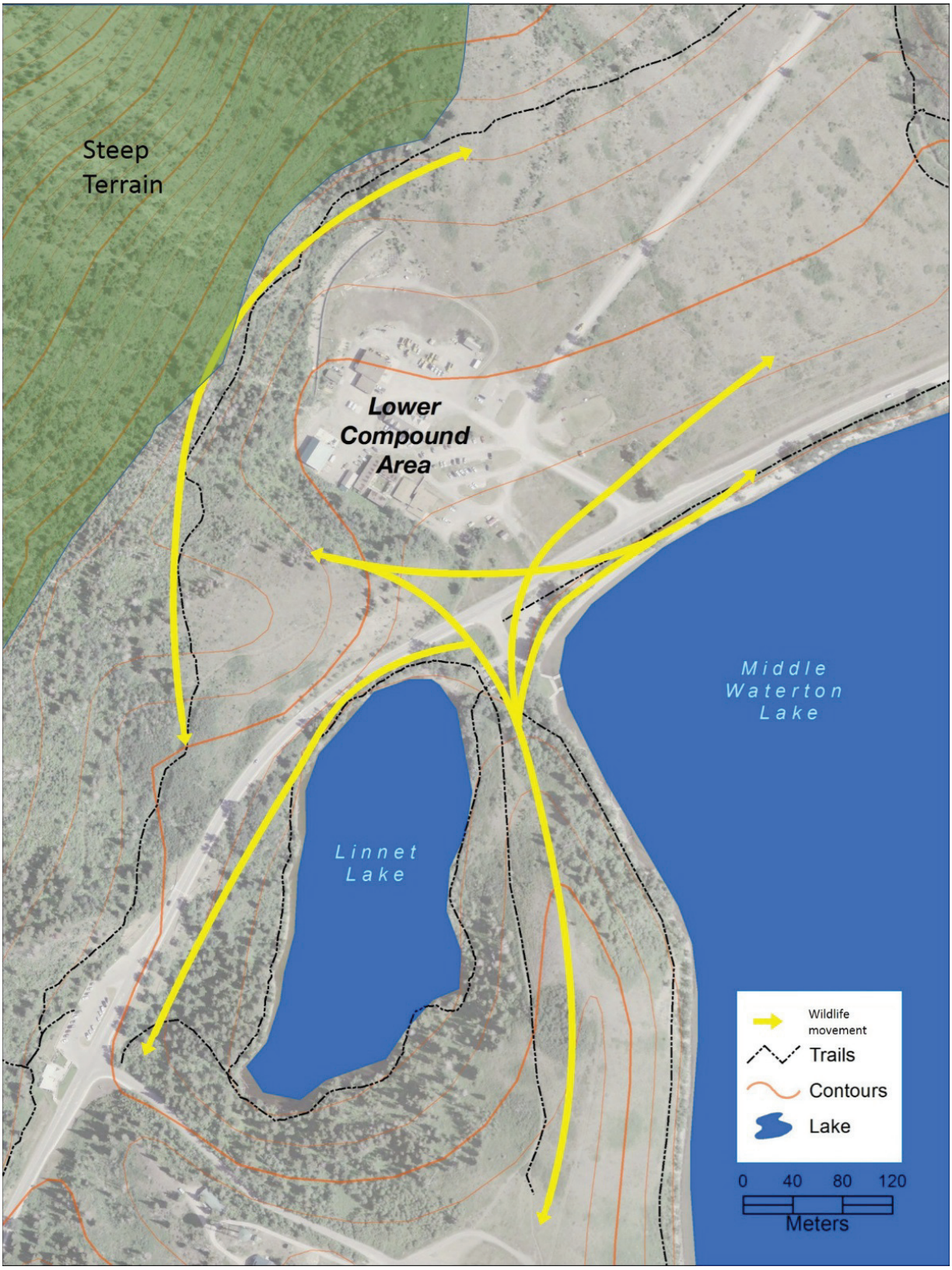

Figure 1: Lower Compound - Middle Waterton Lake Corridor

Appendix 6 Lighting / Dark Sky Compliance Guidelines

The replacement or installation of new lighting must be dark sky compliant and follow the Parks Canada Guidelines and Specifications for Outdoor Lighting Outdoor fixtures must be shielded, full cut off low intensity dark sky compliant lights. Interior lighting must be designed to reduce light trespass. The colour temperature of any new luminaires should be under 3000K, with amber LED or converted amber LED preferred.

Resources available at: **G:\Electronic Bookshelf\Park Management\Dark Sky**

Dick, Robert. 2013. Guidelines for Outdoor Lighting in Dark Sky Preserves. Royal Astronomical Society of Canada, March 2008 (Revised: Summer 2013)
http://rasc.ca/sites/default/files/RASC%20DSP%20GOL%20-%20Summer%202013_0.pdf

Dick, Robert. 2014. Report on Current Lighting within Waterton Lakes National Park, Specifically the Town Site of Waterton. Report presented to Parks Canada.

Parks Canada. 2008. Guidelines and Specifications for Outdoor Lighting at Parks Canada, March 2008 (Revised: February 2016).
http://intranet2/media/2685129/guidelines_and_specifications_for_outdoor_lighting_2016.pdf

PERMIT # 2015 – 18

DEVELOPMENT PERMIT

I, Ifan Thomas, Superintendent, Waterton Lakes National Park of Canada, pursuant to the provisions of the regulations respecting buildings in the National Parks of Canada, do hereby permit

PARKS CANADA

To undertake development at various locations in Waterton townsite in accordance with the development proposal for the:

- Installation of new sanitary and water mains and decommissioning of existing sanitary and water mains
- Replacement of existing roadways including milling and stockpiling road surface, installation of utilities, re-building and paving roadway and installation of new concrete sidewalks.

This Development Permit is subject to the following condition and attached Schedule(s) and to all National Park Regulations now in force or which hereafter may be made from time to time by the Governor-in-Council.

Condition:

1. All mitigations as per the Model Class Screening reports WLNP-2015-06-11 and WLNP 2015-06-12 shall be followed.

Signed and dated at Waterton Park this 17th day of June, 2015

Ifan Thomas, Superintendent

DEVELOPMENT PERMIT
Schedule A

Terms and Conditions:

1. The permit holder and a designated agent of the Superintendent shall be the respective contact personnel for the Project in regards to and in issues arising from the construction of the Project and the Terms and Conditions of the Development Permit.

2. The Permit holder is responsible to ensure that all Consultants, Contractors, Sub-Contractors, Suppliers and their respective employees are adequately informed and supervised to ensure compliance with the environmental protection requirements of this Project and the Terms and Conditions of the Development Permit. Any changes or amendments to submitted drawings or other information may require an amendment to the submitted Environmental Assessment (EA). Discovery of known or suspected contaminants shall be reported to Parks Canada immediately. In the event of suspected contaminants, all work shall cease until direction can be provided by Parks Canada.

3. All fill that is going to be brought into the Park must now be inspected and approved **"At The Source"** prior to shipping. This applies to ALL projects carried out within the Park. Contact Edwin Knox at 403-859-5180 to arrange for an inspection.

4. All Consultants, Contractors, Sub-Contractors and Suppliers shall obtain a National Park business license prior to the commencement of their contracts or work in accordance with the National Park Business Regulations. Provide a list of Sub-Contractors to be employed in the construction of your development project to the Municipal Officer (403-859-5117).

5. All work associated with the Project must proceed according to working drawings and specifications noted above, as well as work descriptions and inspection reports submitted and approved by the Park Superintendent. Any changes to the project construction must be submitted and approved by the Superintendent.

6. Construction safety measures and actions as required by the Occupational Health and Safety Board, the Workers Compensation Board and all other applicable Federal and Provincial statutes and regulations are the responsibility of the permit holder and shall be enforced.

7. Construction activities and methods shall comply with the National Fire Code and all other applicable Fire Safety Requirements for Building Construction regulations or directives as issued by the Dominion Fire Commissioner.

8. The Contractor will confine all operations and procedures within the perimeter of the project site as approved by the Superintendent. The storage of construction equipment, material and waste must be contained and secured within the project site.

9. The Contractor shall ensure the disposal of all construction waste, including but not limited to; concrete, masonry, metal products, gyproc (drywall), wood, shingles, roofing materials and other waste material generated by the project, is entirely removed from the Park in suitable containers and conveyances. Waste shall not be deposited in the Parks Canada Transfer Station, community dumpsters nor at the "Burn Pit" located at Parks Canada's upper compound.

10. The site service locations must be confirmed prior to excavation.

11. Any historic artifacts shall be reported immediately to Parks Canada.

12. Inspection reports from inspection firm must be submitted and approved by Parks Canada to be provided by the leaseholder or the manager of the construction project. These reports must confirm that the project is being built to applicable codes and regulations, and to the conditions of approvals. The reports must be provided on a regular basis; firstly to confirm that they have reviewed the working drawings, excavation, foundation, and completion, as applicable, or once every month while the project is under construction. The reports must be prepared and signed by a professional architect, an engineer or a building inspector as certified by the Province of Alberta.

13. Any changes to the drawings as submitted on file without the knowledge of Parks Canada may cause approvals associated with this application to be null and void.

Figure 7.1 Soils and other heritage resources in the community of Waterton.

Figure 7.2 Vegetation in the community of Waterton (BR1 – Belly River 1, BR8 – Belly River 8, LB3 – Lookout Butte 3)

Figure 7.3 Wildlife habitat areas and wildlife corridors in the community of Waterton.

Figure 7.4 Natural hazards in the community of Waterton.

Figure 7.5 Landuse zoning in the community of Waterton.

Appendix 9: Waterton Specific Mitigations

1. Emergencies: In the event of emergency call (403) 859-2636.

2. All other inquiries: Parks Canada Switch Board (403) 859-2224.

3. Disposal of Waste: All domestic garbage should be stored over the short term in wildlife-proof dumpsters. Domestic recycling should be put in appropriate facilities. Contaminated materials are to be taken out of the Park.

4. Removal of Trees: Permits are required from the warden service if a tree is to be removed. Contact the warden office at (403) 859-5140. The municipal officer may also give permission for a dead tree to be removed without the consent of the Warden Service. Three young trees, from our native species or approved introduced species list, must be planted for each tree removed.

5. Dewatering: Dewatering of a construction site will require a special permit.

6. Replanting: The warden service (and the Municipal Officer) have a list of native grasses, shrubs, flowers and trees for appropriate revegetating.

Modifications of existing buildings are conducted according to industry standards. Modifications of Heritage Buildings and Canada Parks Service (CPS) buildings are encouraged to reflect the heritage character of the building. Procedures similar to those used for original building construction are used for Heritage Buildings.

The procedures and activities used to construct, modify, maintain and repair, and decommission and abandon these service lines must meet industry standards and follow Standards Manuals prepared by the following operators:

- Natural gas - Chief Mountain Natural Gas Co-op
- Water and sanitary waste - Community of Waterton Park
- Power - Fortis Utilities
- Telephone - Telus

Table 9.2 Sub-Class 2: Service Lines - Mitigation for Reducing Impacts of Service Line Projects

Activity	Potential Impacts	Mitigation Measures
Underground and Aboveground Services		
Pre-Planning		
General activities	Runoff / sedimentation; soil contamination	1. Prepare an Emergency Response Plan for the worst case, i.e., heavy rainfall and runoff events, high winds, spills, fires, etc. 2. In the event of emergency operations (as defined in Section 9.11 of the MCSR), call Emergency Services and/or Parks Canada at the phone numbers indicated on Attachment 2. 3. Ensure all activities are conducted at least 30 m from waterbodies.
	Dust production	4. Have a water source available to wet down exposed soil and dry areas.
	Wind and water erosion	5. Prepare a satisfactory Sediment and Erosion Control Plan covering all construction and restoration periods. 6. Acquire necessary sediment control equipment (i.e., straw bales, landscaping fabric, sediment fences, etc.) and install prior to construction. 7. Extra planning should be used for areas with silty deposits and sloped areas with sandy deposits.
	Compaction of soils	8. Identify soils susceptible to compaction (fine textured and organic soils) 9. Wherever possible, use equipment of low bearing weight, low PSI tires, or tracked vehicles, especially in sensitive sites. 10. Building material storage must be contained in one area and clearly flagged to prevent soil compaction and reduce area of disturbance.
	Slope failure	11. Assess slope stability (based on slope length, soil texture, steepness, soil depth) and adjust activities to avoid these areas if possible. Use appropriate setbacks. 12. Pay particular attention when planning for slopes of Class 6 (15-30%) or greater, especially where soils are shallow and likely to move with disturbance.
	Habitat loss and fragmentation or encroachment on wildlife movement corridor	13. Identify wildlife habitat that may be impacted by activities and avoid sensitive areas. 14. Identify and avoid wetlands. 15. Ensure only necessary vegetation is removed and delineate areas to be avoided with biodegradeable flagging tape and/or temporary fences.

Activity	Potential Impacts	Mitigation Measures
	Sensory disturbance and mortality of wildlife	When working adjacent to natural areas: 16. According to the wildlife that may be present, schedule high noise level activities and other intrusive construction activities to avoid critical life stages (breeding, nesting, rearing, migration). Consult with Parks Canada to discuss any localized wildlife concerns. 17. Confine "noise" activities to hours set out in Attachment 2. 18. Consider posting wildlife signs to reduce vehicle speeds and increase driver awareness near construction areas were wildlife mortality has or is likely to occur. 19. Educate workers to not harass or attract wildlife, keep the site free of food scraps, and dispose of garbage in bear proof containers.
	Disturbance of archaeological resources	20. Determine whether there are archaeological sites in the area (see attached maps). 21. Consult with Parks Canada if sites are identified. 22. If potential archaeological sites may be subject to ground disturbance, adapt activities to avoid them. 23. Educate workers to stop work immediately and to notify site supervisor upon finding any archaeological artefacts. Contact Parks Canada immediately.
	Public safety	24. Outline traffic control measures and assess the need for flagging personnel. 25. Call utility line companies to identify infrastructure locations.
	Reduced aesthetics (visual and noise)	26. Evaluate the site layout, access routes and construction activities to minimize their visual impact. 27. Plan work schedule to confine "noise" activities to hours set out in Attachment 2.
Site Preparation		
Clearing of vegetation	Dust production	28. Wet down dry, exposed soils, particularly during windy periods. 29. Ensure materials being stored or transported are covered with tarps or equivalent material.
	Runoff / sedimentation	In all ecosites and on areas with a slope class of 5 (5-15%) or greater: 30. Minimize vegetation cover removal. 31. Assess slopes stability (based on slope length, soil texture, steepness, soil depth). 32. Use appropriate geo-technical control measures to stabilize slopes. 33. To minimize site runoff, control overland flow up and down gradient of exposed areas by use of diversion ditches, bales, vegetative filter strips, and/or sediment traps. 34. When possible, hand clear slopes > 35%. Wait to clear steep sloped areas until immediately before scheduled construction and reclaim immediately afterwards. 35. Regularly inspect and repair erosion control structures.

Activity	Potential Impacts	Mitigation Measures
	Wind and water erosion	Particularly in areas with silty deposits and sloped areas with sandy deposits: 36. Clear minimum area necessary in ROW. Where possible, leave stumps and roots in place. 37. Protect exposed soils with granular materials, mulches, or straw. 38. Cover stockpiles of soil with polyethylene sheeting, tarps, or vegetative cover. 39. Minimize grubbing. 40. Where possible schedule clearing in winter to minimize soil disturbance.
	Damage to adjacent vegetation	To protect areas adjacent to development site: 41. Minimize area cleared. Clearly mark area to be cleared with biodegradable flagging tape and/or temporary fences. 42. Ensure sensitive resources identified in Attachment 3 and 4 (if applicable) are protected. 43. See Attachment 2 for replanting directions. 44. Fencing around trees to be retained must be installed beyond the tree's drip line before starting work on site. 45. Where required obtain permit before removing any trees. See Attachment 2 for details. 46. Ensure excavated material does not damage or bury plant material that is to be retained on the site or in adjacent areas. 47. Trees are to be cut so they fall inside the cleared perimeters. 48. Care must be taken during grubbing and stripping to ensure trees and roots on the edge of the cleared area are not disturbed. 49. Grubbing and stripping may not be permitted on steep slopes to reduce the potential for erosion.
	Habitat fragmentation and wildlife corridor encroachment, loss of wilderness quality	When working adjacent to undeveloped areas and areas bordering natural habitat: 50. Clear only the minimum area required for construction activities. 51. Retain vegetation barriers where possible, especially trees and shrubbery.
Thawing	Decrease in ambient air quality due to emissions	52. Only use ground thawing measures in emergency situations. 53. Minimize use of propane for thawing by scheduling activities for spring/summer/fall.
Grading and excavation	Dust production / aesthetics	54. Wet down dry, exposed soils, particularly during windy periods. 55. Ensure fine materials being stored or transported are covered with tarps or equivalent material. 56. Minimize grading and excavation on windy days to limit dust production.

Activity	Potential Impacts	Mitigation Measures
	Runoff/ sedimentation	57. Halt construction activity on exposed soil during events of high rainfall intensity and runoff. 58. Assess slopes stability (based on slope length, soil texture, steepness, soil depth). 59. Use appropriate geo-technical control measures to stabilize slopes. 60. Cover stockpiles of soil with polyethylene sheeting, tarps, or vegetative cover. Sites close to waterbodies, but not closer than 30 m: 61. To ensure site runoff is minimized, control overland flow up and down gradient of excavated areas by use of effective diversion ditches, bales, vegetation filter strips, or sediment traps.
	Wind and water erosion	Particularly in areas with silty deposits and sloped areas with sandy deposits: 62. Protect exposed soils with coarse granular materials, mulches, or straw. 63. Cover stockpiles of soil with polyethylene sheeting, tarps, or vegetative cover.
	Loss of top soil and/or top soil/subsoil mixing	64. Topsoil separation is required. 65. Topsoil will be stored away from any slopes, subsoils, spoil material, construction activities and day-to-day operations.
	Slope failure	66. Avoid work on steep slopes, especially areas with slope Class 6 (15-30%) or greater. 67. Assess slopes stability (based on slope length, soil texture, steepness, soil depth). 68. Use appropriate geo-technical control measures to stabilize slopes. 69. Topsoil will be stored away from any slopes, subsoils, spoil material, construction activities and day-to-day operations.
	Non-point source hydrocarbon contamination	70. When constructing and upgrading storm sewers, install oil sumps.
Dewatering	Runoff / sedimentation	71. Dewatering is not permitted into any waterbody. 72. Dewatering is permitted on previously disturbed vegetation or natural vegetation if the following conditions are met: • sediment controls are used (i.e., silt fences, silt bags, etc.). • water velocity is controlled to dissipate energy, prevent soil erosion and allow for infiltration. • dewatering structures are continuously monitored to ensure no damage is being done to soil or vegetation. 73. Dewatering into the sanitary or stormwater system is restricted as indicated in Attachment 2. 74. Sediment from the traps may be used as fill on the construction site.
	Damage to adjacent vegetation	75. For undeveloped areas adjacent to development site, ensure water and sediment is directed away from natural areas.

Activity	Potential Impacts	Mitigation Measures
	Sensory disturbance and mortality of wildlife	When working adjacent to natural areas: 76. According to the wildlife that may be present, schedule high noise level activities and other intrusive construction activities to avoid critical life stages (breeding, nesting, rearing, migration). Consult with Parks Canada to discuss any localized wildlife concerns. 77. Confine "noise" activities to hours set out in Attachment 2. 78. Consider posting wildlife signs to reduce vehicle speeds and increase driver awareness near construction areas were wildlife mortality has or is likely to occur. 79. Educate workers to not harass or attract wildlife.
Underground Services		
Installation, Maintenance and Repair		
Trenching, backfilling, compacting, grading	Dust production / aesthetics	80. Minimize the amount of open trench at any given time. 81. Cover stockpiles of soil with polyethylene sheeting, tarps, or vegetative cover. 82. Wet down dry, exposed soils, particularly during windy periods. 83. Minimize trenching, backfilling and compacting on windy days.
	Runoff / sedimentation	84. Assess slopes stability (based on slope length, soil texture, steepness, soil depth). 85. Use appropriate geo-technical control measures to stabilize slopes. 86. All excavations will remain free of water (see mitigations for "Dewatering"). Sites close to waterbodies, but not closer than 30 m: 87. To ensure site runoff is minimized, control overland flow up and down gradient of excavated areas by use of effective diversion ditches, bales, vegetation filter strips, or sediment traps. 88. Stockpiles related to excavations will be stored a minimum of 2 m from embankments, slumps, water bodies and containment sources to prevent material loss or degradation. 89. Following excavations, lightly tamp disturbed areas to minimize slumping and potential pooling or water.
	Non-point source hydrocarbon contamination	90. When constructing and upgrading storm sewers, install oil sumps.
	Erosion (wind and water)	91. Install trench breakers of impervious material to direct groundwater seepage to the surface. 92. Minimize the length of exposed trench and the time of excavated soil exposure. 93. Use interceptor ditches or berms (bales) upgradient of construction to divert overland flow around exposed soil surfaces. 94. Line steep ditches with filter fabric, rock or polyethylene lining to prevent channel erosion.
	Trench collapse	95. Delay trenching until just prior to lowering-in pipeline. 96. Use trench reinforcement device (i.e. cage), if possible.

Activity	Potential Impacts	Mitigation Measures
	Compaction	97. Compact soil to approximate preconstruction conditions while allowing for settling.
	Habitat loss, fragmentation, wildlife mortality	98. Minimize the length of open trench, and the time a trench is open to reduce its affect as a barrier or trap for terrestrial wildlife. 99. Fence trench if it is to be left unattended over night.
Right-of-way maintenance (outside community boundaries)	Dust production / aesthetics	100. Wet down dry, exposed soils, particularly during windy periods. 101. Ensure materials being stored or transported are covered with tarps or equivalent material. 102. Minimize trenching, backfilling and compacting on windy days.
	Loss of wilderness quality	103. Retain vegetation barriers where possible, especially trees and shrubbery. 104. Minimize the amount of vegetation removed.
	Contamination from fertilizers and herbicides	105. Accurately assess the need for chemicals during right-of-way maintenance. An approved current integrated pest management plan must be in place. 106. Avoid herbicide/fertilizer use in proximity to, or where runoff may reach waterbodies.
	Wind and water erosion	107. Where possible schedule vegetation clearing in winter to minimize soil disturbance.
Cleaning storm sceptors (stormwater sewers)	Sedimentation/ contamination of water	108. Ensure stormwater storm sceptors are cleaned regularly. 109. Dispose of sediment and trapped oils and debris at appropriate facilities.
Decommissioning and Abandonment		
Disconnection and removal of pipes/cables	Runoff / sedimentation	110. Stockpiles related to excavations will be stored a minimum of 2 m from embankments, slumps, water bodies and containment sources to prevent material loss or degradation. 111. Following excavations, lightly tamp disturbed areas to minimize slumping and potential pooling or water.
	Wind and water erosion	112. Begin revegetation immediately. 113. Protect exposed soils with coarse granular materials, mulches, or straw.
	Compaction	114. Select appropriate equipment, especially in erosion/slump prone areas. If possible, use wide tracked equipment, rubber tired vehicles and low bearing pressure weight equipment in sensitive areas.
	Other	115. Pipes to be abandoned must be pressure tested for leaks and sealed with no part of the line exposed above the surface. 116. The proponent will retain responsibility for the line until it is removed.
Aboveground Services		
Installation, Maintenance and Repair		

Activity	Potential Impacts	Mitigation Measures
Removal of poles and lines	Compaction	117. Compact soil to approximate precondition conditions while allowing for settling. 118. Select appropriate equipment, especially in erosion/slump prone areas. If possible, use wide tracked equipment, rubber tired vehicles and low bearing pressure weight equipment in sensitive areas.
Digging holes for poles	Slope failure	119. Assess slopes stability (based on slope length, soil texture, steepness, soil depth). 120. Use appropriate geo-technical control measures to stabilize slopes.
	Loss of or damage to vegetation, weed invasion	121. Protect undisturbed land by only stockpiling materials on heavy canvas or polypropylene tarpaulins to protect native vegetation. Excavated material should not be permitted to damage or bury plant material that is to be retained on the RoW or in adjacent areas.
Planting poles and stringing	Heavy equipment and excavation activities may result in soil compaction, loss of organic matter, erosion and loss of topsoil	122. Soil that has been temporarily moved away from poles and placed on tarps will be shovelled back against the pole and lightly tamped to prevent slumping or pooling of water.
	Reduced aesthetics (noise)	123. Confine “noise” activities to hours set out in Attachment 2.
Right-of-way maintenance	Dust production / aesthetics	124. Wet down dry, exposed soils, particularly during windy periods. 125. Ensure fine materials being stored or transported are covered with tarps or equivalent material.
	Contamination from fertilizers and herbicides	126. Accurately assess the need for chemicals during right-of-way maintenance. An approved current integrated pest management plan must be in place. 127. Avoid herbicide/fertilizer use in proximity to, or where runoff may reach waterbodies.
	Loss of wilderness quality	128. Retain vegetation barriers where possible, especially trees and shrubbery. 129. Minimize the amount of vegetation removal.

Activity	Potential Impacts	Mitigation Measures
Decommissioning and Abandonment		
Removal wires and poles, refilling holes	Heavy equipment and excavation activities may result in soil compaction, loss of organic matter, erosion and loss of topsoil.	130. Soil that has been temporarily moved away from poles and placed on tarps will be shovelled back against the pole and lightly tamped to prevent slumping or pooling of water.
	Weed invasion	131. See mitigations for "Revegetation".
	Sensory disturbance	When working adjacent to natural areas: 132. According to the wildlife that may be present, schedule high noise level activities and other intrusive construction activities to avoid critical life stages (breeding, nesting, rearing, migration). Consult with Parks Canada to discuss any localized wildlife concerns. 133. Educate workers to not harass wildlife. 134. Trade waste will be disposed of at appropriate facilities.
Revegetation	Runoff/ sedimentation, wind and water erosion	135. Initiate replanting of disturbed areas immediately after construction is completed. 136. Protect exposed soils with coarse granular materials, mulches, or straw. 137. Use stockpiled topsoil to facilitate reclaimation.
	Contamination from fertilizers and herbicides	138. Accurately assess the need for chemicals during right-of-way maintenance. An approved current integrated pest management plan must be in place. 139. Do not use fertilizers and herbicides in areas where residue or runoff may enter a waterbody or drainage pathway. 140. Do not over water.
	Compaction	141. Cultivate affected areas before reclaiming, especially areas with fine textured or organic soils.
	Weed invasion	142. Revegetate exposed areas at first opportunity. 143. Ensure topsoil is clean and weed free. If clean fill is unavailable, monitor the site, and treat as needed, to ensure appropriate weed control for 3 years following landscaping (applicable to construction crews only). 144. Revegetate with Parks Canada approved grass seed mix, if applicable, or the Town seed mix for landscape rehabilitation (see Attachment 2). 145. An approved current integrated pest management plan must be in place.
	Habitat loss, fragmentation and wildlife corridor encroachment.	146. Revegetate exposed areas at first opportunity.
	Attraction of wildlife to palatable, non-native species	147. Seed with Parks Canada-approved seed mix (see Attachment 2) and native plants that are non-palatable to wildlife.
Underground and Aboveground Services		

Activity	Potential Impacts	Mitigation Measures
General Activities		
Materials handling/storage	Dust production	148. Wet down dry soil or cover with tarp. 149. Ensure materials being stored or transported are covered with tarps or equivalent material.
	Runoff/ sedimentation	150. Cover stockpiles with polyethylene sheeting, tarps, or vegetative cover.
	Damage to adjacent vegetation	151. Excavated material will not be permitted to damage or bury plant material that is to be retained on the site or in adjacent areas. 152. Protect undisturbed land by only stockpiling materials on heavy canvas or polypropylene tarpaulins to protect native vegetation. Excavated material should not be permitted to damage or bury plant material that is to be retained on the construction site or in adjacent areas.
Equipment operation and maintenance	Decrease in ambient air quality due to emissions	153. Ensure all equipment is properly tuned, free of leaks, in good operating order, and fitted with standard air emission control devices. 154. Minimize idling of engines at all times.
	Dust production	155. Wet down dry and dusty roads. 156. Do not use oil-based dust suppressants. 157. Reduce speeds. 158. Ensure materials being stored or transported are covered with tarps or equivalent material.

Activity	Potential Impacts	Mitigation Measures
	Contamination of soil and water from accidental spill	159. Prepare an appropriate Spill Response Plan. In the event of emergency operations (as defined in Section 9.11 of the MCSR), call Emergency Services and/or Parks Canada at the phone numbers indicated on Attachment 2. All spills must be reported to Parks Canada. 160. Avoid work in high risk areas, particularly in areas of high water table, steep slopes or in close proximity to streams. 161. Spill contingency plans, equipment and supplies (to clean up 110% of the site's largest possible fuel/chemical spill) will be present on-site at all times and employees trained in their use. 162. Ensure all construction equipment is free of leaks from oil, fuel or hydraulic fuels. 163. The crossing of any waterbody (including wetlands) by construction equipment, or the use of such equipment within waterbodies is strictly prohibited unless prior approval has been confirmed. 164. Designate refuelling areas at least 100 m away from any water body. Stationary stores of fuel will be bermed with an impermeable liner to contain 125% of the anticipated fuel quantity. Any contaminated rainwater will be moved out of the park. 165. Refuelling activities should not be conducted where run-off could carry contaminants into drainage pathways (including storm sewers). 166. Equipment will be fuelled on hardened surfaces. 167. Dispose of contaminated materials at provincially certified disposal sites outside of the park. No treatment of contaminated soils (e.g., bioremediation) is allowed in the park. All applicable documentation demonstrating proper disposal will be provided to Parks Canada.
	Compaction of soils	168. Restrict vehicular travel and other equipment operation to the construction site and approved access routes. 169. Vehicle parking will be restricted to specialized areas on the construction site. 170. Minimize or halt construction traffic during wet conditions when the soil shows signs of ponding or rutting. Use low impact equipment when possible and repair rutted areas with approved methods 171. In sensitive areas, if possible, use equipment that minimizes surface disturbance including low ground pressure tracks/tires, blade shoes and brush rake attachments.
	Damage to adjacent vegetation	Undeveloped areas adjacent to development site: 172. Careful machine operation is required to ensure that damage to surrounding vegetation does not occur. 173. Excavated material must not be permitted to bury plant material that is to be retained. Snow fences may be used to prevent excavated material escaping into the surrounding forest.

Activity	Potential Impacts	Mitigation Measures
	Weed invasion	174. All construction equipment from outside a national park will be steam cleaned prior to arrival to minimize the risk of introducing weeds. 175. Construction equipment from outside the park will not be washed while in the park.
	Sensory disturbance to wildlife	All undeveloped areas and areas bordering natural habitat, especially wildlife movement corridors and natural wetlands: 176. Use existing roadways, pathways and previously disturbed areas for site access and travel within the site. 177. Educate workers not to enter wildlife corridors. 178. Confine "noise" activities to hours set out in Attachment 2.
	Increased traffic levels	179. Time construction activities to minimize vehicle conflicts on access roads and/or use flagging personnel.
	Public Safety	180. If equipment infringes on driving lane, flag persons are required. 181. All roadway signage must be in accordance with provincial standards. Signs must be bilingual or symbolic. 182. The proponent is responsible for site security at all times.
	Aesthetics	183. All heavy equipmen6t operating on paved surfaces should be equipped with street pads. Damage to paved surfaces will be restored to original conditions.
Waste management (general)	Contamination of soil and water from accidental spill or improper disposal	184. No rock, silt, cement, grout, asphalt, petroleum product, lumber, vegetation, domestic waste, or any deleterious substance shall be placed or allowed to disperse into any stream, river, pond, storm or sanitary sewer, or other water course. Excess material will not be disposed of on or adjacent to the site.
	Aesthetics (visual and smell)	185. Collect all waste, store appropriately and dispose of trade waste at appropriate landfills. 186. All garbage and food must be stored in bear-proof bins. 187. Keep site maintained in a tidy condition, free from the accumulation of waste products, debris and litter. 188. Construction sites must undergo thorough clean-up, including removal of general litter, survey stakes and flagging tape at project completion.

Table 10.2 Sub-Class 3: Mitigations for reducing impacts from Road, Sidewalk, Boardwalk and Parking Lot Projects

Activity	Potential Impacts	Mitigation Measures
Pre-Planning		
General activities	Runoff / sedimentation; Soil contamination	1. Prepare an Emergency Response Plan for the worst case, i.e., heavy rainfall and runoff events, high winds, spills, fires, etc. 2. In the event of emergency operations (as defined in Section 10.11 of the MCSR), call Emergency Services and/or Parks Canada at the phone numbers indicated on Attachment 2. 3. Ensure all activities are conducted at least 30 m from waterbodies.
	Dust production	4. Have a water source available to wet down exposed soil and dry areas.
	Wind and water erosion	5. Prepare a satisfactory Sediment and Erosion Control Plan covering all construction and restoration periods. 6. Acquire necessary sediment control equipment, (i.e., straw bales, landscaping fabric, sediment fences, etc.) and install prior to construction. 7. Extra planning should be used for areas with silty deposits and sloped areas with sandy deposits.
	Compaction of soils	8. Identify soils susceptible to compaction (fine textured and organic soils) 9. Wherever possible, use equipment of low bearing weight, low PSI tires, or tracked vehicles, especially in sensitive sites. 10. Building material storage must be contained in one area and clearly flagged to prevent soil compaction and reduce area of disturbance.
	Slope failure	11. Assess slope stability (based on slope length, soil texture, steepness, soil depth) and adjust activities to avoid these areas if possible. Use appropriate setbacks. 12. Pay particular attention when planning for slopes of Class 6 (15-30%) or greater, especially where soils are shallow and likely to move with disturbance.
	Habitat loss and fragmentation or encroachment on wildlife movement corridor	13. Identify wildlife habitat that may be impacted by activities and avoid sensitive areas. 14. Identify and avoid wetlands. 15. Ensure only necessary vegetation is removed and delineate areas to be avoided with biodegradeable flagging tape and/or temporary fences.

Activity	Potential Impacts	Mitigation Measures
	Sensory disturbance and mortality of wildlife	When working adjacent to natural areas: 16. According to the wildlife that may be present, schedule high noise level activities and other intrusive construction activities to avoid critical life stages (breeding, nesting, rearing, migration). Consult with Parks Canada to discuss any localized wildlife concerns. 17. Confine "noise" activities to hours set out in Attachment 2. 18. Consider posting wildlife signs to reduce vehicle speeds and increase driver awareness near construction areas were wildlife mortality has or is likely to occur. 19. Educate workers to not harass or attract wildlife, keep the site free of food scraps, and dispose of garbage in bear proof containers.
	Disturbance of archaeological resources	20. Determine whether there are archaeological sites in the area (see attached maps). 21. Consult with Parks Canada if sites are identified. 22. If potential archaeological sites may be subject to ground disturbance, then activities should be adapted to avoid them. 23. Educate workers to stop work immediately and to notify site supervisor upon finding any archaeological artefacts. Contact Parks Canada immediately.
	Public safety	24. Outline traffic control measures and assess the need for flagging personnel. 25. Call utility line companies to identify infrastructure locations. 26. All roadway signage must be in accordance with provincial standards. Signs must be bilingual or symbolic.
	Reduced aesthetics	27. Evaluate the site layout, access routes and construction activities to minimize their visual impact. 28. Plan work schedule to confine "noise" activities to hours set out in Attachment 2. 29. Work should be conducted during periods of low park visitation to reduce noise and visual impacts
Modification of Roads and Construction, Modification, Decommissioning and Abandonment of Sidewalks, Boardwalks and Parking Lots		
Grading and gravel resurfacing; Material stripping, excavation, subgrade repair; Road shoulder modifications; Replace or modify culverts and ditches; Re-surfacing (asphalt)	Dust production / aesthetics	30. Wet down dry, exposed soils, particularly during windy periods. 31. Ensure materials being stored or transported are covered with tarps or equivalent material. 32. Minimize grading and excavation on windy days to limit dust production. 33. Avoid spillage and excess applications.
	Runoff / sedimentation (through intermittent drainage pathways including storm sewer systems)	Particularly areas with slope class of 5 (5-15%) or greater and sites close to water. 34. Wet down or cover stockpiles with polyethylene sheeting, tarps, or vegetative cover. 35. Minimize vegetation cover removal. 36. Filter or settle out sediment before the water enters any drainage pathway; including stormwater systems. 37. Control overland flow up and down gradient of exposed areas by use of diversion ditches, bales, vegetative filter strips, and/or sediment traps.

Activity	Potential Impacts	Mitigation Measures
	Wind and water erosion	All Ecosites in steeply sloped areas, and sloped areas with sandy loam/loamy sand soils for water erosion: 38. Protect exposed soils with coarse granular materials, mulches, or straw along drainage pathways. 39. Cover fills or stockpiles with polyethylene sheeting, tarps, or vegetative cover. 40. Line steep ditches with filter fabric, rock or polyethylene lining to prevent channel erosion.
	Contamination from runoff of poorly adhered seal coat	41. Only apply seal coat to dry surface and not prior to (within 24 hrs.) or during rainfall.
	Sensory disturbance	42. According to the wildlife that may be present, schedule high noise level activities and other intrusive construction activities to avoid critical life stages (breeding, nesting, rearing, migration). Consult with Parks Canada to discuss any localized wildlife concerns. 43. Educate workers to not harass or attract wildlife, keep the site free of food scraps, and dispose of garbage in bear proof containers.
Post installation and replacement	Sensory disturbance and mortality to wildlife	44. See mitigations for "General activities".
Painting lines	Contamination from accidental spills	45. Spill contingency plans, equipment and supplies will be present on-site at all times and employees trained in their use. 46. Paints should be selected that have minimal amounts of potentially harmful substances, particularly water soluble organic chemicals, lead and other metals. Rust inhibiting paints should be chosen over barrier types of paints to refuse the total volume of paint required over the long term. 47. Hand painting is preferred over spray painting. Where sprayers are used, they must be properly adjusted and shielded to minimize the amounts of paint lost to overspray. 48. Do not spray in high winds.
Sidewalk, curb and guttering installation	Reduced aesthetics	49. See mitigations under "General activities".
Light installation (10 or more)	Runoff / sedimentation	50. Light installations requiring small excavations for pre-formed concrete bases should minimize the amount of disturbed soil. 51. Minimize the time that borrow is exposed and the excavation remains open. Where required, use site specific erosion control methods (see mitigations for "Grading and gravel resurfacing".) 52. Do not schedule work during wet weather
	Reduced aesthetics	53. See mitigations under "General activities".
Maintenance and Repair of Roads		
Patching	Runoff of poorly adhered seal coat	54. Only apply seal coat to dry surface and not prior to (within 24 hrs.) or during rainfall

Activity	Potential Impacts	Mitigation Measures
Storage and application of road salts and abrasives	Salt contamination/ salt impact on vegetation	55. Store salt under dry shelter, away from wind or water erosion on impervious platform. 56. Ensure no runoff from storage of salt to soil or water. For dangerous locations: 57. Minimize the application rate of salt to the road. 58. Restrict application of salt (including liquid deicer) to the traveled surface of the road, and ensure calibration is tightly controlled. 59. Salt-minimizing measures include pre-wetting of salt; calibration of spreaders; combined use with sand and gravel; early snow removal from roads
	Contamination from accidental spills	60. Prepare an appropriate Spill Response Plan In the event of emergency operations (as defined in Section 10.11 of the MCSR), call Emergency Services and/or Parks Canada at the phone numbers indicated on Attachment 2. Parks Canada must be notified in the event of a spill.
	Attraction of wildlife to roads (salt) causing mortality	61. Minimize the application rate of salt to the roads, particularly in proximity to wildlife corridors. 62. Restrict salt to the traveled surface of the road. 63. Reduce speed limits.
Snow removal and storage	Salt contamination	64. Accumulated snow contaminated with salt should only be disposed at designated areas away from sensitive vegetation and drainage pathways. 65. Dispose of snow in designated Parks Canada snow dump. 66. Minimize the application rate of salt to the roads, and ensure the calibration is tightly controlled so salt application is restricted to the road surface.
Vegetation management	Contamination from fertilizers and herbicides	67. Accurately assess the need for chemicals during right-of-way maintenance. An approved current integrated pest management plan must be in place. 68. Avoid herbicide/fertilizer use in proximity to, or where run-off may reach waterbodies. 69. Ensure adjacent natural areas are not affected by herbicide use.
	Damage to adjacent vegetation, loss of native vegetation	To protect areas adjacent to development site: 70. Minimize area cleared. Clearly mark area to be cleared with biodegradable flagging tape and/or temporary fences. 71. Ensure sensitive resources listed on the form or attached are protected. 72. Fencing around trees to be retained must be installed beyond the tree's drip line prior to commencement of site work. 73. Where required obtain permit before removing any trees. See Attachment 2 for details. 74. Ensure excavated material does not damage or bury plant material that is to be retained on the site or in adjacent areas. 75. Trees are to be cut so they fall inside the cleared perimeters. 76. Care must be taken during grubbing and stripping to ensure trees and roots on the edge of the cleared area are not disturbed. 77. Minimize grubbing in all areas. Grubbing and stripping may not be permitted on steep slopes.

Activity	Potential Impacts	Mitigation Measures
Dust control	Runoff of CaCl into water bodies	78. Avoid spillage and excess applications. Use water, when possible.
Site Reclamation and Restoration		
Grading	Dust production	79. Wet down dry, exposed soils, particularly during windy periods. 80. Ensure materials being stored or transported are covered with tarps or equivalent material.
	Runoff/ sedimentation	81. Halt grading on exposed soil during events of high rainfall intensity and runoff. Consult the Sediment and Erosion Control Plan. 82. Cover stockpiles of soil with polyethylene sheeting, tarps, or vegetative cover. Establish containment structures to trap runoff.
	Wind and water erosion	Particularly in areas with silty deposits and sloped areas with sandy deposits: 83. Protect exposed soils with coarse granular materials, mulches, or straw along drainage pathways. 84. Recontour slopes to predisturbance conditions.
Revegetation	Runoff / Sedimentation (through intermittent drainage pathways including storm sewers)/erosion	85. Initiate replanting of disturbed areas immediately after construction is completed. 86. For every tree cleared, plant at least two native trees, or as directed by Attachment 2. 87. Protect exposed soils with coarse granular materials, mulches, or straw along drainage pathways.
	Compaction of soils	88. Cultivate affected areas before reclaiming, especially areas with fine textured or organic soils.
	Contamination from fertilizers and herbicides	89. Accurately assess the need for chemicals during site revegetation. An approved current integrated pest management plan must be in place. 90. Do not use fertilizers and herbicides in areas where residue or run-off may enter a waterbody or drainage pathway. 91. Do not over water.
	Weed invasion	92. Revegetate exposed areas at first opportunity. 93. Ensure topsoil is clean and weed free. If clean fill is unavailable, monitor the site, and treat as needed, to ensure appropriate weed control for 3 years following landscaping (applicable to construction crews only). 94. Revegetate with Parks Canada approved grass seed mix, if applicable, or the Town seed mix for landscape rehabilitation (see Attachment 2). 95. An approved current integrated pest management plan must be in place.
General Activities		
Materials handling/storage	Dust production	96. Wet down dry, exposed soils or cover with tarps. 97. Ensure materials being stored or transported are covered with tarps or equivalent material.

Activity	Potential Impacts	Mitigation Measures
	Damage to adjacent vegetation	98. If tree damage does occur, a horticultural sealant will be applied to the tree damage as soon as possible. Diseased vegetation should be disposed of through burning. A burning permit must be obtained. 99. Protect undisturbed land by only stockpiling materials on heavy canvas or polypropylene tarpaulins to protect native vegetation. Excavated material will not be permitted to damage or bury plant material that is to be retained on the construction site or in adjacent areas.
	Decreased aesthetics (visual) and public safety	100. Materials will be stored within the delineated confines of the work site.
Equipment operation and maintenance	Decrease in ambient air quality due to emissions	101. Ensure all equipment is properly tuned, free of leaks, in good operating order, and fitted with standard air emission control devices. 102. Minimize idling of engines at all times.
	Dust production	103. Wet down dry and dusty roads. 104. Do not use oil-based dust suppressants. 105. Reduce speeds. 106. Ensure materials being stored or transported are covered with tarps or equivalent material.
	Contamination of soil and water from accidental spill	107. Prepare an appropriate Spill Response Plan. In the event of emergency operations (as defined in Section 10.11 of the MCSR), call Emergency Services and/or Parks Canada at the phone numbers indicated on Attachment 2. All spills must be reported to Parks Canada. 108. Avoid work in high risk areas, particularly in areas of high water table, steeply sloped sites or in close proximity to streams. 109. Spill contingency plans, equipment and supplies (to clean up 110% of the site's largest possible fuel/chemical spill) will be present on-site at all times and employees trained in their use. 110. Ensure all construction equipment is free of leaks from oil, fuel or hydraulic fuels. 111. In-stream crossing of any waterbody (including wetlands) by construction equipment, or the use of such equipment within waterbodies is strictly prohibited unless prior approval has been confirmed by Parks Canada. 112. Designate refuelling areas at least 100 m away from any water body. Equipment will be fuelled on hardened surfaces. Stationary stores of fuel will be bermed with an impermeable liner or other suitable secondary containment to contain 125% of the anticipated fuel quantity. Any contaminated rainwater will be moved out of the park. 113. Refuelling activities should not be conducted where run-off could carry contaminants into drainage pathways (including storm sewers). 114. Dispose of contaminated materials at provincially certified disposal sites outside of the park. No treatment of contaminated soils (e.g., bioremediation) is allowed in the park. All applicable documentation demonstrating proper disposal will be provided to Parks Canada.

Activity	Potential Impacts	Mitigation Measures
	Compaction of soils	115. Restrict vehicular travel and other equipment operation to the construction site and approved access routes. 116. Vehicle parking will be restricted to specialized areas on the construction site. 117. Minimize or halt construction traffic during wet conditions when the soil shows signs of ponding or rutting. 118. In sensitive areas, if possible, use equipment which minimizes surface disturbance including low ground pressure tracks/tires, blade shoes and brush rake attachments.
	Damage to adjacent vegetation	Undeveloped areas adjacent to development site: 119. Careful machine operation is required to ensure that damage to surrounding vegetation does not occur. 120. Excavated material must not be permitted to bury plant material that is to be retained. Snow fences may be used to prevent excavated material escaping into the surrounding forest.
	Weed invasion	121. All construction equipment from outside a national park will be steam cleaned prior to arrival to minimize the risk of introducing weeds. 122. Construction equipment from outside a park will not be washed while in the park.
	Sensory disturbance to wildlife	All undeveloped areas and areas bordering natural habitat, especially wildlife movement corridors and natural wetlands: 123. Use existing roadways, pathways and previously disturbed areas for site access and travel within the site. 124. Educate workers not to enter wildlife corridors. 125. Confine "noise" activities to hours set out in Attachment 2.
	Increased traffic levels	126. Time construction activities to minimize vehicle conflicts on access roads and/or use flagging personnel.
	Public Safety	127. If equipment infringes on driving lane, flag persons are required. 128. All roadway signage must be in accordance with provincial standards. Signs must be bilingual or symbolic. 129. The proponent is responsible for site security at all times.
	Aesthetics	130. All heavy equipmen6t operating on paved surfaces should be equipped with street pads. Damage to paved surfaces will be restored to original conditions.
Waste management (general)	Contamination of soil and water from accidental spill or improper disposal	131. No rock, silt, cement, grout, asphalt, petroleum product, lumber, vegetation, domestic waste, or any deleterious substance shall be placed or allowed to disperse into any stream, river, pond, storm or sanitary sewer, or other water course. Excess material will not be disposed of on or adjacent to the site.
	Aesthetics (visual and smell)	132. Collect all waste, store appropriately and dispose trade waste at appropriate facilities. 133. All garbage and food must be stored in bear-proof bins. 134. Keep site maintained in a tidy condition, free from the accumulation of waste products, debris and litter. 135. Construction sites must undergo thorough clean-up, including removal of general litter, survey stakes and flagging tape at project completion.

Activity	Potential Impacts	Mitigation Measures
Hazardous materials collection and handling	Contamination of soil or water	136. Prepare an appropriate Spill Response Plan. In the event of emergency operations (as defined in Section 10.11 of the MCSR), call Emergency Services and/or Parks Canada at the phone numbers indicated on Attachment 2. 137. All toxic/hazardous materials will be identified during demolition and will be handled as required under the Canadian Environmental Protection Act, Transportation of Dangerous Goods Act and Workplace Hazardous Materials Information Service. 138. Dispose of contaminated materials at provincially certified disposal sites outside of the park. No treatment of contaminated soils (e.g., bioremediation) is allowed in the park. All applicable documentation demonstrating proper disposal should be obtained. 139. All hazardous materials and wastes will be clearly labelled with WHMIS labels and information. 140. Spill contingency plans, equipment and supplies will be present on-site at all times and employees trained in their use. 141. All fuels, oils, lubricants and other petrochemical products will not be stored within 100 meters of any waterbody (including wetlands). 142. Do not store fuels, lubricants, solvents, paints, and other chemicals on site overnight except within construction trailers secured with lock and key. Storage should be on a bermed, impervious site (secondary containment). Contact Parks Canada to determine if an additional permit is necessary. 143. No rock, silt, cement, grout, asphalt, petroleum product, lumber, vegetation, domestic waste, or any deleterious substance shall be placed or allowed to disperse into any stream, river, pond, storm or sanitary sewer, or other water course. 144. All construction sites will be equipped with containers suitable for the secure, temporary storage of hazardous wastes. Hazardous wastes will be separated by type. Follow all applicable regulations and codes for the management and handling of hazardous wastes. 145. If any hazardous waste is uncovered during excavation/construction it must be investigated, source identified, properly removed and disposed to an approved landfill.

July 25, 2016

Amec Foster Wheeler File: LT164504.100

Public Works and Government Services Canada
1650, 635 - 8th Avenue, SW
Calgary, Alberta T2P 3M3

Attention: **Mr. Mark Burke, P.Eng.**
Project Manager, Southern Alberta

RE: **GEOTECHNICAL INVESTIGATION**
Proposed Infrastructure Renewal
Waterton Lakes National Park (Townsite), Alberta

1.0 INTRODUCTION

At the request of Public Works and Government Services Canada, Amec Foster Wheeler Environment & Infrastructure (Amec Foster Wheeler) has carried out a geotechnical investigation to support the design and construction of proposed watermain, sanitary sewer and surfacing upgrades throughout the northern portion of the Waterton Townsite.

This report summarizes the results of the field work and laboratory testing, and provides geotechnical discussion and recommendations to support the proposed project. This report has been revised to also include proposed storm sewer construction along the rear lane west of Evergreen Avenue.

2.0 METHODOLOGY AND RESULTS

2.1 Methodology

In order to assess the subsurface soil and groundwater conditions at the various streets indicated, Amec Foster Wheeler visited the sites on March 24, 2016 and monitored the drilling of seven boreholes. An additional seven boreholes were advanced at the site on July 14, 2016. The boreholes were drilled at the locations denoted on Figure 1 as BH16-01 to BH16-14, inclusive, at the following general locations.

- BH16-01 was drilled along Mountain View Road just west of Wind Flower Avenue;
- BH16-02 to BH16-04 were drilled along Cameron Falls Drive between Fountain Avenue and Wind Flower Avenue;
- BH16-05 was drilled along Clematis Avenue just east of Lupine Lane;
- BH16-06 was drilled along Harebell Road, just north of Lupine Lane;

Amec Foster Wheeler Environment & Infrastructure
A division of Amec Foster Wheeler Americas Ltd.
469 – 40th Street South
Lethbridge, AB, CANADA T1J 4M1
Tel +1 (403) 327-7474
Fax +1 (403) 327-7682 www.amecfw.com

- BH16-07 was drilled between Harebell Road and Wind Flower Avenue and North of Vimy Avenue; and
- BH16-08 to BH16-14 were drilled along the rear lane west of Evergreen Avenue.

The boreholes were advanced using a truck-mounted drill equipped with continuous flight solid stem augers operated by Chilako Drilling Services, and were terminated at depths ranging between of about 2.6 m and 3 m below existing grade. During the drilling, representative samples of the subsurface strata were recovered from the auger flights. Upon completion of the drilling, the boreholes were backfilled with the auger cuttings.

The drilling was carried out under the supervision of an Amec Foster Wheeler technician, who collected the soil samples and logged the subsurface conditions. The recovered soil samples were transported to Amec Foster Wheeler's Lethbridge laboratory for further review by a geotechnical engineer and selected laboratory classification testing. Laboratory testing for this project consisted of routine moisture content determinations, with results presented on the appended borehole logs.

Samples remaining will be stored for a period of three months following issuance of this report at which time they will be discarded unless we are requested otherwise by the Client.

2.2 Soil and Groundwater Conditions

The subsurface conditions encountered are detailed on the attached borehole logs and summarized in the following paragraphs.

Boreholes BH16-01 to BH16-07

Topsoil

With the exception of borehole BH16-04, the boreholes were each surfaced with layer of topsoil ranging between about 0.1 m to 0.15 m thick.

Crushed Gravel

Borehole BH16-04 was surface with a 0.2 m thick layer of crushed gravel.

Sand & Gravel

The predominant natural mineral soil encountered in each of the borehole was sand and gravel. The sand and gravel was described as fine grained and silty with occasional cobbles, brown, and compact (based on tactile observations and observed drilling resistance).

Based on laboratory testing, the *in situ* water content of the sand and gravel ranged between about 3 percent and 5.5 percent, generally indicative of moist to very moist soil conditions.

Boreholes BH16-08 to BH16-14

The boreholes along the rear lane west of Evergreen Avenue were each surface with a layer of asphalt, underlain by low plastic clay described as silty, sandy and gravelly. The clay was generally in a firm and moist condition, and extended to depths ranging between about 1.2 m and 3.0 m below the roadway surface. At boreholes BH16-09 to BH16-14, a layer of sand and gravel was encountered underlying the upper clay soils. The sand and gravel was described as medium to coarse grained, clayey, and moist to very moist.

Sloughing and Groundwater Conditions

The boreholes were each dry upon completion of the drilling. It is noted that the groundwater conditions are expected to fluctuate seasonally in response to spring thaw and periods of heavy precipitation, and may differ at the time of construction.

3.0 GEOTECHNICAL DISCUSSION AND RECOMMENDATIONS

As indicated previously, it is understood that watermain, sanitary sewer and surface upgrades are proposed throughout the northern portion of the Waterton Townsite, as well as storm sewer construction along the rear lane west of Evergreen Avenue. It is anticipated that the installation of underground utility pipe will generally be by conventional open cut techniques.

In general, the existing soil and groundwater conditions along the subject streets will support conventional open cut construction for the proposed pipe installation, followed by conventional roadway reconstruction.

Based on our understanding of the proposed development as discussed above in conjunction with the results of the current investigation, the following paragraphs provide geotechnical discussion and recommendations pertaining to site preparation, excavations, frost protection requirements, roadway reconstruction, and pavement construction.

3.1 Excavations and Dewatering

All excavations should conform to Part 32 of the 2009 Alberta Occupational Health and Safety Code.

Where spatial restrictions do not allow for the required safe trench sideslope inclinations, conventional shoring (i.e., trench boxes) can be considered. For shoring design, the following parameters can be used for the upper fill and native soils:

Table 1: Parameters for Shoring Design

Parameter	Natural Sand & Gravel Soils
Total Unit Weight, γ, kN/m³	22
Active Earth Pressure Coefficient, k_a	0.29

The weight of the adjacent structures must also be considered in the calculation of the lateral earth pressures where these structures fall within a line drawn up at 45° from the base of the excavations. Where trench boxes or shoring are used, adjacent structures should be inspected prior to and following construction to ensure damage has not occurred to the foundations.

Based on the results of the investigation, groundwater accumulation is not generally anticipated within service trenches above 3.0 m depth. However, groundwater in the Waterton Townsite is known to fluctuate rather dramatically throughout the year and as a result of the level of water in the adjacent Upper Waterton Lake.

While minor groundwater accumulations within the services trenches can likely be accommodated by conventional sump pumping techniques, more extensive dewatering measures, such as the use of well points, would likely be required where excavation below the groundwater table is required. Amec can assist further in this regard, upon request.

3.2 Service Construction and Backfill

Bearing problems are not anticipated for pipes founded on the natural sand and gravel deposits.

The trenches above the service pipes should be backfilled with inorganic on-site soils placed in maximum 300 mm thick lifts and compacted to at least 98 percent of SPMDD. Bedding sand or gravel will be required for the pipe installations in accordance with the manufacturer's recommendations.

The natural on-site excavated sand and gravel can be generally used as trench backfill, provided the material is screened of boulders larger than about 150 mm, and moisture conditioned to within three percent of the optimum moisture content as determined by the Standard Proctor test. In this regard, some moisture conditioning of the soils should be anticipated.

3.3 Roadway Reconstruction

It is understood that the excavations will generally encompass the full width of the various roadways. Accordingly, full width reconstruction of the roadway has been indicated.

Prior to placement of granular fill or asphalt, areas to be paved should be stripped of all existing deleterious material, scarified and moisture conditioned to 300 mm depth, and be recompacted to a minimum of 98 percent of SPMDD at a moisture content within two percent of optimum.

Any soft spots revealed by this or any other observations should be over-excavated and backfilled with approved material.

Provided the preceding recommendations are followed, the pavement thickness design requirements given in the following table are recommended for the anticipated traffic loading and subgrade conditions.

Table 2: Recommended Pavement Structure Thicknesses

Pavement Layer	Compaction Requirements	Medium Duty Pavement Structure Thicknesses
Asphaltic Concrete	93% Maximum Theoretical Density	100 mm Type III*
Granular Base Course*	100% SPMDD	75 mm
Reclaimed asphalt*	100% SPMDD	75 mm
*Notes:	* City of Lethbridge Specification * The reclaimed asphalt (millings) should be well graded with a maximum size of 25 mm. The subgrade must be moisture conditioned to a depth of 300 mm and compacted to 98% SPMDD.	

The recommended pavement structure provided in the above table is based on the natural subgrade soil properties determined from visual examination and textural classification of the soil samples. Consequently, the recommended pavement structures should be considered for preliminary design purposes only, and should be verified during construction based on actual site subgrade conditions.

If construction is undertaken under adverse weather conditions (i.e., wet or freezing conditions) subgrade preparation and granular base requirements should be reviewed by the geotechnical engineer. As well, if only a portion of the pavement will be in place during construction, the granular base may have to be thickened, and/or the subgrade improved with a geotextile separator.

Samples of both the granular base aggregates and asphaltic concrete paving materials should be checked for conformance to the City of Lethbridge specifications prior to use on site, and during construction.

Good drainage provisions will optimize pavement performance. The pavement subgrade and the finished pavement surface should be free of depressions and should be sloped (preferably at

a minimum grade of two percent) to provide effective surface drainage toward catchbasins. Surface water should not be allowed to pond adjacent to the outside edges of pavement areas.

A program of in situ density testing must be carried out to verify that satisfactory levels of compaction are being achieved.

4.0 CLOSURE

The recommendations given in the above sections are based upon interpreted conditions found within the 14 boreholes drilled at this site. Should subsurface conditions other than those presented in this report be encountered during construction, the Client should notify our office so that these recommendations can be reviewed.

Soil conditions, by their nature, can be highly variable across a site. A contingency should be included in the construction budget to allow for the possibility of variations in soil conditions, which may result in modification of the design, and/or changes in the construction procedures.

Amec Foster Wheeler requests the opportunity to review the design drawings and the installation of the foundations to confirm that the recommendations in this report have been correctly interpreted and implemented. If not afforded the opportunity to conduct this review, Amec Foster Wheeler will not accept responsibility for the interpretation of this report. Amec Foster Wheeler would be pleased to provide any further information that may be needed during design and to advise on the geotechnical aspects of specifications for inclusion in contract documents.

This report has been prepared for the exclusive use of Public Works and Government Services Canada and their designers for the specific application to the development described in this report. Any use that a third party makes of this report, or any reliance or decisions based on this report are the sole responsibility of those parties. This report has been prepared in accordance with generally accepted soil and foundation engineering practices. No other warranty, express or implied, is made.

Yours truly,

Amec Foster Wheeler Environment & Infrastructure
A division of Amec Foster Wheeler Americas Ltd.

PROFESSIONAL ENGINEER
JOHN LOBBEZOO
ALBERTA

John Lobbezoo, P.Eng.
Geotechnical Project Engineer

Co-Authored by:
Mohamadjavad Sheikhtaheri, M.A.Sc
Geotechnical EIT

Reviewed by:
Kevin Spencer, P.Eng.
Associate Geotechnical Engineer

APEGA PERMIT P04546

Attachments: Figure 1: Borehole Location Plan
Borehole Logs
Explanation of Symbols and Terms

Amec Foster Wheeler Environment & Infrastructure
469 - 40th Street South
Lethbridge, Alberta CANADA T1J 4M1
Tel. (403) 327-7474
Fax (403) 327-7682

amec foster wheeler

Public Works and Government Services Canada

TITLE: BOREHOLE LOCATION PLAN	DWN BY: BJ	DATUM: NA	DATE: JULY 2016
PROJECT: Waterton Townsite Streetworks PHASE C Waterton Lakes National Park, Alberta	CHK'D BY: JS	PROJECT NO: LT164504.100	FIGURE 1
	SCALE: NTS		

PROJECT: Waterton Townsite Infrastructure Renewal	DRILLER: Chilako Drilling Services	BOREHOLE NO: **BH16-01**
CLIENT: Public Works and Government Services Canada	DRILL/METHOD: Truck Mounted C-1150 Drill/ SSA	PROJECT NO: LT154508.800
LOCATION: Mountain View Rd W of Wind Flower (refer to Figure 1)		ELEVATION:

SAMPLE TYPE: Shelby Tube, No Recovery, SPT Test (N), Grab Sample, Split-Pen, Core

BACKFILL TYPE: Bentonite, Pea Gravel, Slough, Grout, Drill Cuttings, Sand

STANDARD PEN (N) 20 40 60 80

PLASTIC M.C. LIQUID 20 40 60 80

Depth (m)	SOIL DESCRIPTION	SPT (N)	SAMPLE TYPE	SAMPLE NO	OTHER TESTS COMMENTS
0	**TOPSOIL**				
	GRAVELLY SAND - fine grained, coarse grained gravel, silty, sandy, moist				
				1S1	
1					
2					
3	**End of Borehole at 3.0 m depth**				
4	Notes: 1. Borehole log to be read in conjunction with Amec Foster Wheeler report LT154508.800. For definitions of terms and symbols used on logs refer to sheets following logs. 2. Borehole open and dry at completion of drilling. 3. Borehole backfilled with drill cuttings.				
5					
6					
7					
8					
9					
10					

Amec Foster Wheeler
Environment & Infrastructure

LOGGED BY: MG	COMPLETION DEPTH: 3.00 m
REVIEWED BY: JL	COMPLETION DATE: 24/3/16

PROJECT: Waterton Townsite Infrastructure Renewal	DRILLER: Chilako Drilling Services	BOREHOLE NO: **BH16-02**
CLIENT: Public Works and Government Services Canada	DRILL/METHOD: Truck Mounted C-1150 Drill/ SSA	PROJECT NO: LT154508.800
LOCATION: Cameron Falls Dr between Fountain & Wind Flower (refer to Figure 1)		ELEVATION:

SAMPLE TYPE: Shelby Tube, No Recovery, SPT Test (N), Grab Sample, Split-Pen, Core

BACKFILL TYPE: Bentonite, Pea Gravel, Slough, Grout, Drill Cuttings, Sand

Depth (m)	STANDARD PEN (N) 20 40 60 80 / PLASTIC M.C. LIQUID 20 40 60 80	SOIL SYMBOL	SOIL DESCRIPTION	SPT (N)	SAMPLE TYPE	SAMPLE NO	OTHER TESTS COMMENTS	Depth (m)
0			**TOPSOIL**					0
			GRAVELLY SAND - fine grained, coarse grained gravel, silty, sandy, moist					
						1S1		
1								1
2								2
			End of Borehole at 2.6 m depth					
3			Notes: 1. Borehole log to be read in conjunction with Amec Foster Wheeler report LT154508.800. For definitions of terms and symbols used on logs refer to sheets following logs. 2. Borehole open and dry at completion of drilling. 3. Borehole backfilled with drill cuttings.					3
4								4
5								5
6								6
7								7
8								8
9								9
10								

Amec Foster Wheeler Environment & Infrastructure	LOGGED BY: MG	COMPLETION DEPTH: 2.60 m
	REVIEWED BY: JL	COMPLETION DATE: 24/3/16
		Page 1 of 1

PROJECT: Waterton Townsite Infrastructure Renewal	DRILLER: Chilako Drilling Services	BOREHOLE NO: **BH16-03**
CLIENT: Public Works and Government Services Canada	DRILL/METHOD: Truck Mounted C-1150 Drill/ SSA	PROJECT NO: LT154508.800
LOCATION: Cameron Falls Dr between Fountain & Wind Flower (refer to Figure 1)		ELEVATION:

SAMPLE TYPE: Shelby Tube | No Recovery | SPT Test (N) | Grab Sample | Split-Pen | Core

BACKFILL TYPE: Bentonite | Pea Gravel | Slough | Grout | Drill Cuttings | Sand

STANDARD PEN (N) 20 40 60 80

PLASTIC M.C. LIQUID 20 40 60 80

Depth (m)	SOIL SYMBOL	SOIL DESCRIPTION	SPT (N)	SAMPLE TYPE	SAMPLE NO	OTHER TESTS COMMENTS	Depth (m)
0		**TOPSOIL**					0
		GRAVELLY SAND - fine grained, coarse grained gravel, silty, sandy, moist					
					3S1		
1							1
2							2
3		**End of Borehole at 3.0 m depth**					3
		Notes: 1. Borehole log to be read in conjunction with Amec Foster Wheeler report LT154508.800. For definitions of terms and symbols used on logs refer to sheets following logs. 2. Borehole open and dry at completion of drilling. 3. Borehole backfilled with drill cuttings.					
4							4
5							5
6							6
7							7
8							8
9							9
10							

Amec Foster Wheeler Environment & Infrastructure	LOGGED BY: MG	COMPLETION DEPTH: 3.00 m
	REVIEWED BY: JL	COMPLETION DATE: 24/3/16
		Page 1 of 1

PROJECT: Waterton Townsite Infrastructure Renewal	DRILLER: Chilako Drilling Services	BOREHOLE NO: **BH16-04**
CLIENT: Public Works and Government Services Canada	DRILL/METHOD: Truck Mounted C-1150 Drill/ SSA	PROJECT NO: LT154508.800
LOCATION: Cameron Falls Dr between Fountain & Wind Flower (refer to Figure 1)		ELEVATION:

SAMPLE TYPE: Shelby Tube, No Recovery, SPT Test (N), Grab Sample, Split-Pen, Core

BACKFILL TYPE: Bentonite, Pea Gravel, Slough, Grout, Drill Cuttings, Sand

Depth (m)	STANDARD PEN (N) 20 40 60 80 / PLASTIC M.C. LIQUID 20 40 60 80	SOIL SYMBOL	SOIL DESCRIPTION	SPT (N)	SAMPLE TYPE	SAMPLE NO	OTHER TESTS COMMENTS	Depth (m)
0			**CRUSHED GRAVEL**					0
			GRAVELLY SAND - fine grained, coarse grained gravel, silty, sandy, moist					
1						2S1		1
2			**End of Borehole at 2.0 m depth**					2
3								3
4								4
5								5
6								6
7								7
8								8
9								9
10								

Notes:
1. Borehole log to be read in conjunction with Amec Foster Wheeler report LT154508.800. For definitions of terms and symbols used on logs refer to sheets following logs.
2. Borehole open and dry at completion of drilling.
3. Borehole backfilled with drill cuttings.

Amec Foster Wheeler Environment & Infrastructure	LOGGED BY: MG	COMPLETION DEPTH: 2.00 m
	REVIEWED BY: JL	COMPLETION DATE: 24/3/16
		Page 1 of 1

PROJECT: Waterton Townsite Infrastructure Renewal	DRILLER: Chilako Drilling Services	BOREHOLE NO: **BH16-05**
CLIENT: Public Works and Government Services Canada	DRILL/METHOD: Truck Mounted C-1150 Drill/ SSA	PROJECT NO: LT154508.800
LOCATION: Clematis Ave W of Lupine (refer to Figure 1)		ELEVATION:

SAMPLE TYPE: Shelby Tube, No Recovery, SPT Test (N), Grab Sample, Split-Pen, Core

BACKFILL TYPE: Bentonite, Pea Gravel, Slough, Grout, Drill Cuttings, Sand

Depth (m)	STANDARD PEN (N) 20 40 60 80 / PLASTIC M.C. LIQUID 20 40 60 80	SOIL SYMBOL	SOIL DESCRIPTION	SPT (N)	SAMPLE TYPE	SAMPLE NO	OTHER TESTS COMMENTS	Depth (m)
0			**TOPSOIL**					0
			GRAVELLY SAND - fine grained, coarse grained gravel, silty, sandy, moist					
						1S1		
1								1
2								2
3			**End of Borehole at 3.0 m depth**					3
4								4
5								5
6								6
7								7
8								8
9								9
10								

Notes:
1. Borehole log to be read in conjunction with Amec Foster Wheeler report LT154508.800. For definitions of terms and symbols used on logs refer to sheets following logs.
2. Borehole open and dry at completion of drilling.
3. Borehole backfilled with drill cuttings.

Amec Foster Wheeler Environment & Infrastructure	LOGGED BY: MG	COMPLETION DEPTH: 3.00 m
	REVIEWED BY: JL	COMPLETION DATE: 24/3/16
		Page 1 of 1

PROJECT: Waterton Townsite Infrastructure Renewal	DRILLER: Chilako Drilling Services	BOREHOLE NO: **BH16-06**
CLIENT: Public Works and Government Services Canada	DRILL/METHOD: Truck Mounted C-1150 Drill/ SSA	PROJECT NO: LT154508.800
LOCATION: Harebell Rd N of Lupine (refer to Figure 1)		ELEVATION:

SAMPLE TYPE: Shelby Tube, No Recovery, SPT Test (N), Grab Sample, Split-Pen, Core

BACKFILL TYPE: Bentonite, Pea Gravel, Slough, Grout, Drill Cuttings, Sand

Depth (m)	STANDARD PEN (N) 20 40 60 80 / PLASTIC M.C. LIQUID 20 40 60 80	SOIL SYMBOL	SOIL DESCRIPTION	SPT (N)	SAMPLE TYPE	SAMPLE NO	OTHER TESTS COMMENTS	Depth (m)
0			**TOPSOIL**					0
			GRAVELLY SAND - fine grained, coarse grained gravel, silty, sandy, moist					
						1S1		
1								1
2			... occasional cobbles below 2.4 m depth					2
			End of Borehole at 2.7 m depth					
3								3
4								4
5								5
6								6
7								7
8								8
9								9
10								

Notes:
1. Borehole log to be read in conjunction with Amec Foster Wheeler report LT154508.800. For definitions of terms and symbols used on logs refer to sheets following logs.
2. Borehole open and dry at completion of drilling.
3. Borehole backfilled with drill cuttings.

Amec Foster Wheeler
Environment & Infrastructure

LOGGED BY: MG	COMPLETION DEPTH: 2.70 m
REVIEWED BY: JL	COMPLETION DATE: 24/3/16

PROJECT: Waterton Townsite Infrastructure Renewal	DRILLER: Chilako Drilling Services	BOREHOLE NO: **BH16-07**
CLIENT: Public Works and Government Services Canada	DRILL/METHOD: Truck Mounted C-1150 Drill/ SSA	PROJECT NO: LT154508.800
LOCATION: Between Harebell & Wind Flower, N of Vimy (refer to Figure 1)		ELEVATION:

SAMPLE TYPE: Shelby Tube | No Recovery | SPT Test (N) | Grab Sample | Split-Pen | Core

BACKFILL TYPE: Bentonite | Pea Gravel | Slough | Grout | Drill Cuttings | Sand

Depth (m)	STANDARD PEN (N) 20 40 60 80 / PLASTIC M.C. LIQUID 20 40 60 80	SOIL SYMBOL	SOIL DESCRIPTION	SPT (N)	SAMPLE TYPE	SAMPLE NO	OTHER TESTS COMMENTS	Depth (m)
0			**TOPSOIL**					0
			GRAVELLY SAND - fine grained, coarse grained gravel, silty, sandy, moist					
						1S1		
1								1
2								2
			End of Borehole at 2.8 m depth					
3								3
4								4
5								5
6								6
7								7
8								8
9								9
10								

Notes:
1. Borehole log to be read in conjunction with Amec Foster Wheeler report LT154508.800. For definitions of terms and symbols used on logs refer to sheets following logs.
2. Borehole open and dry at completion of drilling.
3. Borehole backfilled with drill cuttings.

Amec Foster Wheeler Environment & Infrastructure	LOGGED BY: MG	COMPLETION DEPTH: 2.80 m
	REVIEWED BY: JL	COMPLETION DATE: 24/3/16
		Page 1 of 1

PROJECT: Waterton Townsite Street Works	DRILLER: Chilako Drilling Services	BOREHOLE NO: **BH16-08**
CLIENT: Public Works & Government Services Canada	DRILL/METHOD: Truck Mounted C-1150 Drill/ SSA	PROJECT NO: LT164504.100
LOCATION: Rear lane west of Evergreen Avenue; Refer to Figure 1		ELEVATION:

SAMPLE TYPE: Shelby Tube, No Recovery, SPT Test (N), Grab Sample, Split-Pen, Core

BACKFILL TYPE: Bentonite, Pea Gravel, Slough, Grout, Drill Cuttings, Sand

Depth (m)	STANDARD PEN (N) 20 40 60 80 / PLASTIC M.C. LIQUID 20 40 60 80	SOIL SYMBOL	SOIL DESCRIPTION	SPT (N)	SAMPLE TYPE	SAMPLE NO	OTHER TESTS COMMENTS	Depth (m)
0			**ASPHALT**					
			CLAY - low plastic, silty, sandy, gravelly, brown, firm, moist to very moist					
			... medium to coarse grained gravel increased below 0.7 m depth			S1		
1						S2		1
						S3		
2						S4		2
						S5		
3						S6		3
			End of Borehole at 3 m depth					
4								4
5								

Notes:
1. Borehole log to be read in conjunction with Amec Foster Wheeler report LT164504.100. For definitions of terms and symbols used on logs refer to sheets following logs.
2. Borehole was open and dry at completion of drilling.
3. Borehole backfilled with drill cuttings.

Amec Foster Wheeler Environment & Infrastructure	LOGGED BY: MS	COMPLETION DEPTH: 3.00 m
	REVIEWED BY: JL	COMPLETION DATE: 14/7/16
		Page 1 of 1

PROJECT: Waterton Townsite Street Works	DRILLER: Chilako Drilling Services	BOREHOLE NO: **BH16-09**
CLIENT: Public Works & Government Services Canada	DRILL/METHOD: Truck Mounted C-1150 Drill/ SSA	PROJECT NO: LT164504.100
LOCATION: Rear lane west of Evergreen Avenue; Refer to Figure 1		ELEVATION:

SAMPLE TYPE: Shelby Tube | No Recovery | SPT Test (N) | Grab Sample | Split-Pen | Core

BACKFILL TYPE: Bentonite | Pea Gravel | Slough | Grout | Drill Cuttings | Sand

STANDARD PEN (N) 20 40 60 80

PLASTIC M.C. LIQUID 20 40 60 80

Depth (m)	SOIL DESCRIPTION	SAMPLE NO	OTHER TESTS COMMENTS
0	**ASPHALT**		
	CLAY - low plastic, silty, sandy, gravelly, brown, firm, moist to very moist		
	... medium to coarse grained gravel increased below 0.6 m depth	S1	
1		S2	
		S3	
	GRAVEL - meduim to coarse grained, clayey, moist		
2		S4	
3		S5	
		S6	
	End of Borehole at 3.8 m depth		
4	Notes: 1. Borehole log to be read in conjunction with Amec Foster Wheeler report LT164504.100. For definitions of terms and symbols used on logs refer to sheets following logs. 2. Borehole was open and dry at completion of drilling. 3. Borehole backfilled with drill cuttings.		
5			

SPT (N) | SAMPLE TYPE

Amec Foster Wheeler
Environment & Infrastructure

LOGGED BY: MS	COMPLETION DEPTH: 3.80 m
REVIEWED BY: JL	COMPLETION DATE: 14/7/16

PROJECT: Waterton Townsite Street Works	DRILLER: Chilako Drilling Services	BOREHOLE NO: **BH16-10**
CLIENT: Public Works & Government Services Canada	DRILL/METHOD: Truck Mounted C-1150 Drill/ SSA	PROJECT NO: LT164504.100
LOCATION: Rear lane west of Evergreen Avenue; Refer to Figure 1		ELEVATION:

SAMPLE TYPE: Shelby Tube, No Recovery, SPT Test (N), Grab Sample, Split-Pen, Core

BACKFILL TYPE: Bentonite, Pea Gravel, Slough, Grout, Drill Cuttings, Sand

STANDARD PEN (N) 20 40 60 80

PLASTIC M.C. LIQUID 20 40 60 80

Depth (m)	SOIL DESCRIPTION	SAMPLE NO	OTHER TESTS COMMENTS
0	**ASPHALT**		
	CLAY - low plastic, silty, sandy, gravelly, brown, firm, moist		
		S1	
	... medium to coarse grained gravel increased below 0.8 m depth		
1		S2	
		S3	
2	**GRAVEL** - meduim to coarse grained, clayey, moist	S4	
		S5	
3		S6	
	End of Borehole at 3.3 m depth		
4			
5			

Notes:
1. Borehole log to be read in conjunction with Amec Foster Wheeler report LT164504.100. For definitions of terms and symbols used on logs refer to sheets following logs.
2. Borehole was open and dry at completion of drilling.
3. Borehole backfilled with drill cuttings.

Amec Foster Wheeler Environment & Infrastructure	LOGGED BY: MS	COMPLETION DEPTH: 3.30 m
	REVIEWED BY: JL	COMPLETION DATE: 14/7/16
		Page 1 of 1

PROJECT: Waterton Townsite Street Works	DRILLER: Chilako Drilling Services	BOREHOLE NO: **BH16-11**
CLIENT: Public Works & Government Services Canada	DRILL/METHOD: Truck Mounted C-1150 Drill/ SSA	PROJECT NO: LT164504.100
LOCATION: Rear lane west of Evergreen Avenue; Refer to Figure 1		ELEVATION:

SAMPLE TYPE: Shelby Tube, No Recovery, SPT Test (N), Grab Sample, Split-Pen, Core

BACKFILL TYPE: Bentonite, Pea Gravel, Slough, Grout, Drill Cuttings, Sand

STANDARD PEN (N) 20 40 60 80

PLASTIC M.C. LIQUID 20 40 60 80

Depth (m)	SOIL DESCRIPTION	SPT (N)	SAMPLE TYPE	SAMPLE NO	OTHER TESTS COMMENTS
0	**ASPHALT**				
	CLAY - low plastic, silty, sandy, gravelly, brown, firm, moist				
	... medium to coarse grained gravel increased below 0.7 m depth			S1	
1				S2	
	GRAVEL - meduim to coarse grained, clayey, moist to very moist				
				S3	
2				S4	
				S5	
3				S6	
	End of Borehole at 3 m depth				
4					
5					

Notes:
1. Borehole log to be read in conjunction with Amec Foster Wheeler report LT164504.100. For definitions of terms and symbols used on logs refer to sheets following logs.
2. Borehole was open and dry at completion of drilling.
3. Borehole backfilled with drill cuttings.

Amec Foster Wheeler
Environment & Infrastructure

LOGGED BY: MS	COMPLETION DEPTH: 3.00 m
REVIEWED BY: JL	COMPLETION DATE: 14/7/16

PROJECT: Waterton Townsite Street Works	DRILLER: Chilako Drilling Services	BOREHOLE NO: **BH16-12**
CLIENT: Public Works & Government Services Canada	DRILL/METHOD: Truck Mounted C-1150 Drill/ SSA	PROJECT NO: LT164504.100
LOCATION: Rear lane west of Evergreen Avenue; Refer to Figure 1		ELEVATION:

SAMPLE TYPE: Shelby Tube, No Recovery, SPT Test (N), Grab Sample, Split-Pen, Core

BACKFILL TYPE: Bentonite, Pea Gravel, Slough, Grout, Drill Cuttings, Sand

STANDARD PEN (N) 20 40 60 80

PLASTIC M.C. LIQUID 20 40 60 80

Depth (m)	SOIL DESCRIPTION	SPT (N)	SAMPLE TYPE	SAMPLE NO	OTHER TESTS COMMENTS
0	**ASPHALT**				
	CLAY - low plastic, silty, sandy, gravelly, brown, firm, moist				
	... medium to coarse grained gravel increased below 0.6 m depth			S1	
1				S2	
	GRAVEL - meduim to coarse grained, clayey, moist to very moist				
				S3	
2				S4	
				S5	
				S6	
	End of Borehole at 2.8 m depth				
3					
4					
5					

Notes:
1. Borehole log to be read in conjunction with Amec Foster Wheeler report LT164504.100. For definitions of terms and symbols used on logs refer to sheets following logs.
2. Borehole was open and dry at completion of drilling.
3. Borehole backfilled with drill cuttings.

Amec Foster Wheeler
Environment & Infrastructure

LOGGED BY: MS	COMPLETION DEPTH: 2.80 m
REVIEWED BY: JL	COMPLETION DATE: 14/7/16

PROJECT: Waterton Townsite Street Works	DRILLER: Chilako Drilling Services	BOREHOLE NO: **BH16-13**
CLIENT: Public Works & Government Services Canada	DRILL/METHOD: Truck Mounted C-1150 Drill/ SSA	PROJECT NO: LT164504.100
LOCATION: Rear lane west of Evergreen Avenue; Refer to Figure 1		ELEVATION:

SAMPLE TYPE: Shelby Tube, No Recovery, SPT Test (N), Grab Sample, Split-Pen, Core

BACKFILL TYPE: Bentonite, Pea Gravel, Slough, Grout, Drill Cuttings, Sand

Depth (m)	STANDARD PEN (N) 20 40 60 80 / PLASTIC M.C. LIQUID 20 40 60 80	SOIL SYMBOL	SOIL DESCRIPTION	SPT (N)	SAMPLE TYPE	SAMPLE NO	OTHER TESTS COMMENTS	Depth (m)
0			**ASPHALT**					
			CLAY - low plastic, silty, sandy, gravelly, brown, firm, moist ... medium to coarse grained gravel increased below 0.5 m depth					
						S1		
1						S2		1
						S3		
2						S4		2
			GRAVEL - meduim to coarse grained, clayey, moist to very moist					
						S5		
						S6		
3			**End of Borehole at 3 m depth**					3
4								4
5								

Notes:
1. Borehole log to be read in conjunction with Amec Foster Wheeler report LT164504.100. For definitions of terms and symbols used on logs refer to sheets following logs.
2. Borehole was open and dry at completion of drilling.
3. Borehole backfilled with drill cuttings.

Amec Foster Wheeler Environment & Infrastructure	LOGGED BY: MS	COMPLETION DEPTH: 3.00 m
	REVIEWED BY: JL	COMPLETION DATE: 14/7/16
		Page 1 of 1

PROJECT: Waterton Townsite Street Works	DRILLER: Chilako Drilling Services	BOREHOLE NO: **BH16-14**
CLIENT: Public Works & Government Services Canada	DRILL/METHOD: Truck Mounted C-1150 Drill/ SSA	PROJECT NO: LT164504.100
LOCATION: Rear lane west of Evergreen Avenue; Refer to Figure 1		ELEVATION:

SAMPLE TYPE: Shelby Tube, No Recovery, SPT Test (N), Grab Sample, Split-Pen, Core

BACKFILL TYPE: Bentonite, Pea Gravel, Slough, Grout, Drill Cuttings, Sand

STANDARD PEN (N) 20 40 60 80

PLASTIC M.C. LIQUID 20 40 60 80

Depth (m)	SOIL DESCRIPTION	SPT (N)	SAMPLE TYPE	SAMPLE NO	OTHER TESTS COMMENTS
0	**ASPHALT**				
	CLAY - low plastic, silty, sandy, gravelly, brown, firm, moist				
	... medium to coarse grained gravel increased below 0.65 m depth			S1	
1				S2	
				S3	
2	**GRAVEL** - meduim to coarse grained, clayey, moist to very moist			S4	
				S5	
3				S6	
	End of Borehole at 3 m depth				
4					
5					

Notes:
1. Borehole log to be read in conjunction with Amec Foster Wheeler report LT164504.100. For definitions of terms and symbols used on logs refer to sheets following logs.
2. Borehole was open and dry at completion of drilling.
3. Borehole backfilled with drill cuttings.

Amec Foster Wheeler
Environment & Infrastructure

LOGGED BY: MS	COMPLETION DEPTH: 3.00 m
REVIEWED BY: JL	COMPLETION DATE: 14/7/16

EXPLANATION OF TERMS AND SYMBOLS

The terms and symbols used on the borehole logs to summarize the results of field investigation and subsequent laboratory testing are described in these pages.

It should be noted that materials, boundaries and conditions have been established only at the borehole locations at the time of investigation and are not necessarily representative of subsurface conditions elsewhere across the site.

TEST DATA

Data obtained during the field investigation and from laboratory testing are shown at the appropriate depth interval.

Abbreviations, graphic symbols, and relevant test method designations are as follows:

*C	Consolidation test	*ST	Swelling test
D_R	Relative density	TV	Torvane shear strength
*k	Permeability coefficient	VS	Vane shear strength
*MA	Mechanical grain size analysis and hydrometer test	w	Natural Moisture Content (ASTM D2216)
		w_l	Liquid limit (ASTM D 423)
N	Standard Penetration Test (CSA A119.1-60)	w_p	Plastic Limit (ASTM D 424)
N_d	Dynamic cone penetration test	E_f	Unit strain at failure
NP	Non plastic soil	γ	Unit weight of soil or rock
pp	Pocket penetrometer strength (kg/cm²)	γ_d	Dry unit weight of soil or rock
*q	Triaxial compression test	ρ	Density of soil or rock
q_u	Unconfined compressive strength	ρ_d	Dry Density of soil or rock
*SB	Shearbox test	C_u	Undrained shear strength
SO_4	Concentration of water-soluble sulphate	→	Seepage
		▼	Observed water level

* The results of these tests are usually reported separately

Soils are classified and described according to their engineering properties and behaviour.

The soil of each stratum is described using the Unified Soil Classification System[1] modified slightly so that an inorganic clay of "medium plasticity" is recognized.

The modifying adjectives used to define the actual or estimated percentage range by weight of minor components are consistent with the Canadian Foundation Engineering Manual[2].

Relative Density and Consistency:

Cohesionless Soils		Cohesive Soils		
Relative Density	SPT (N) Value	Consistency	Undrained Shear Strength c_u (kPa)	Approximate SPT (N) Value
Very Loose	0-4	Very Soft	0-12	0-2
Loose	4-10	Soft	12-25	2-4
Compact	10-30	Firm	25-50	4-8
Dense	30-50	Stiff	50-100	8-15
Very Dense	>50	Very Stiff	100-200	15-30
		Hard	>200	>30

Standard Penetration Resistance ("N" value)
The number of blows by a 63.6kg hammer dropped 760 mm to drive a 50 mm diameter open sampler attached to "A" drill rods for a distance of 300 mm.

1 "Unified Soil Classification System", Technical Memorandum 36-357 prepared by Waterways Experiment Station, Vicksburg, Mississippi, Corps of Engineers, U.S. Army. Vol. 1 March 1953.
2 "Canadian Foundation Engineering Manual", 4th Edition, Canadian Geotechnical Society, 2006.

MODIFIED UNIFIED CLASSIFICATION SYSTEM FOR SOILS

MAJOR DIVISION			GROUP SYMBOL	GRAPH SYMBOL	COLOUR CODE	TYPICAL DESCRIPTION	LABORATORY CLASSIFICATION CRITERIA	
COARSE GRAINED SOILS (MORE THAN HALF BY WEIGHT LARGER THAN 75µm)	GRAVELS MORE THAN HALF THE COARSE FRACTION LARGER THAN 4.75mm	CLEAN GRAVELS (LITTLE OR NO FINES)	GW		RED	WELL GRADED GRAVELS, GRAVEL-SAND MIXTURES, LITTLE OR NO FINES	$C_U = \frac{D_{60}}{D_{10}} > 4$; $C_C = \frac{(D_{30})^2}{D_{10} \times D_{60}} = 1$ to 3	
			GP		RED	POORLY GRADED GRAVELS, GRAVEL-SAND MIXTURES, LITTLE OR NO FINES	NOT MEETING ABOVE REQUIREMENTS	
		DIRTY GRAVELS (WITH SOME FINES)	GM		YELLOW	SILTY GRAVELS, GRAVEL-SAND-SILT MIXTURES	CONTENT OF FINES EXCEEDS 12 %	ATTERBERG LIMITS BELOW "A" LINE OR P.I. LESS THAN 4
			GC		YELLOW	CLAYEY GRAVELS, GRAVEL-SAND-CLAY MIXTURES		ATTERBERG LIMITS ABOVE "A" LINE P.I. MORE THAN 7
	SANDS MORE THAN HALF THE COARSE FRACTION SMALLER THAN 4.75mm	CLEAN SANDS (LITTLE OR NO FINES)	SW		RED	WELL GRADED SANDS, GRAVELLY SANDS, LITTLE OR NO FINES	$C_U = \frac{D_{60}}{D_{10}} > 6$; $C_C = \frac{(D_{60})^2}{D_{10} \times D_{60}} = 1$ to 3	
			SP		RED	POORLY GRADED SANDS, GRAVELLY SANDS, LITTLE OR NO FINES	NOT MEETING ABOVE REQUIREMENTS	
		DIRTY SANDS (WITH SOME FINES)	SM		YELLOW	SILTY SANDS, SAND-SILT MIXTURES	CONTENT OF FINES EXCEEDS 12 %	ATTERBERG LIMITS BELOW "A" LINE OR P.I. LESS THAN 4
			SC		YELLOW	CLAYEY SANDS, SAND-CLAY MIXTURES		ATTERBERG LIMITS ABOVE "A" LINE P.I. MORE THAN 7
FINE-GRAINED SOILS (MORE THAN HALF BY WEIGHT SMALLER THAN 75µm)	SILTS BELOW "A" LINE NEGLIGIBLE ORGANIC CONTENT	$W_L < 50\%$	ML		GREEN	INORGANIC SILTS AND VERY FINE SANDS, ROCK FLOUR, SILTY SANDS OF SLIGHT PLASTICITY	CLASSIFICATION IS BASED UPON PLASTICITY CHART (SEE BELOW)	
		$W_L < 50\%$	MH		BLUE	INORGANIC SILTS, MICACEOUS OR DIATOMACEOUS, FINE SANDS OR SILTY SOILS		
	CLAYS ABOVE "A" LINE NEGLIGIBLE ORGANIC CONTENT	$W_L < 30\%$	CL		GREEN	INORGANIC CLAYS OF LOW PLASTICITY, GRAVELLY, SANDY OR SILTY CLAYS, LEAN CLAYS		
		$30\% < W_L < 50\%$	CI		GREEN-BLUE	INORGANIC CLAYS OF MEDIUM PLASTICITY, SILTY CLAYS		
		$W_L > 50\%$	CH		BLUE	INORGANIC CLAYS OF HIGH PLASTICITY, FAT CLAYS		
	ORGANIC SILTS & CLAYS BELOW "A" LINE	$W_L < 50\%$	OL		GREEN	ORGANIC SILTS AND ORGANIC SILTY CLAYS OF LOW PLASTICITY	WHENEVER THE NATURE OF THE FINES CONTENT HAS NOT BEEN DETERMINED, IT IS DESIGNATED BY THE LETTER "F", E.G. SF IS A MIXTURE OF SAND WITH SILT OR CLAY	
		$W_L > 50\%$	OH		BLUE	ORGANIC CLAYS OF HIGH PLASTICITY		
HIGHLY ORGANIC SOILS			Pt		ORANGE	PEAT AND OTHER HIGHLY ORGANIC SOILS	STRONG COLOUR OR ODOUR, AND OFTEN FIBEROUS TEXTURE	

SPECIAL SYMBOLS

LIMESTONE		OILSAND	
SANDSTONE		SHALE	
SILTSTONE		FILL (UNDIFFERENTIATED)	

SOIL COMPONENTS

FRACTION	U.S. STANDARD SIEVE SIZE		DEFINING RANGES OF PERCENTAGE BY WEIGHT OF MINOR COMPONENTS	
GRAVEL	PASSING	RETAINED	PERCENT	DESCRIPTOR
COARSE	76mm	19mm	35-50	AND
FINE	19mm	4.75mm		
SAND			20-35	Y/EY
COARSE	4.75mm	2.00mm		
MEDIUM	2.00mm	425µm	10-20	SOME
FINE	425µm	75µm		
FINES (SILT OR CLAY BASED ON PLASTICITY)	75µm		1-10	TRACE

PLASTICITY CHART FOR SOILS PASSING 425 µm SIEVE

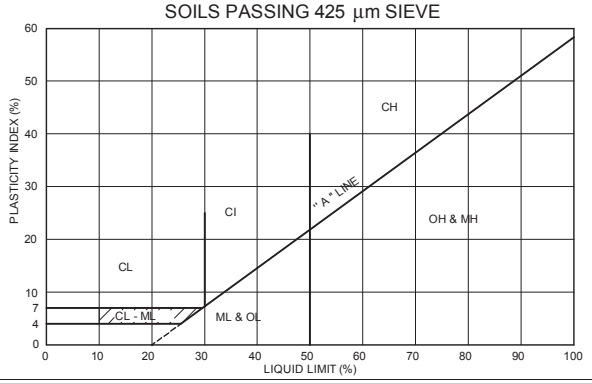

NOTES:

1. ALL SIEVE SIZES MENTIONED ON THIS CHART ARE U.S. STANDARD A.S.T.M. E.11
2. COARSE GRAIN SOILS WITH 5 TO 12% FINES GIVEN COMBINED GROUP SYMBOLS, E.G. GW-GC IS A WELL GRADED GRAVEL SAND MIXTURE WITH CLAY BINDER BETWEEN 5 AND 12% FINES.

OVERSIZED MATERIAL

ROUNDED OR SUBROUNDED:	NOT ROUNDED:
COBBLES 76mm TO 200mm	ROCK FRAGMENTS > 76mm
BOULDERS > 200mm	ROCKS > 0.76 CUBIC METRE IN VOLUME

amec foster wheeler

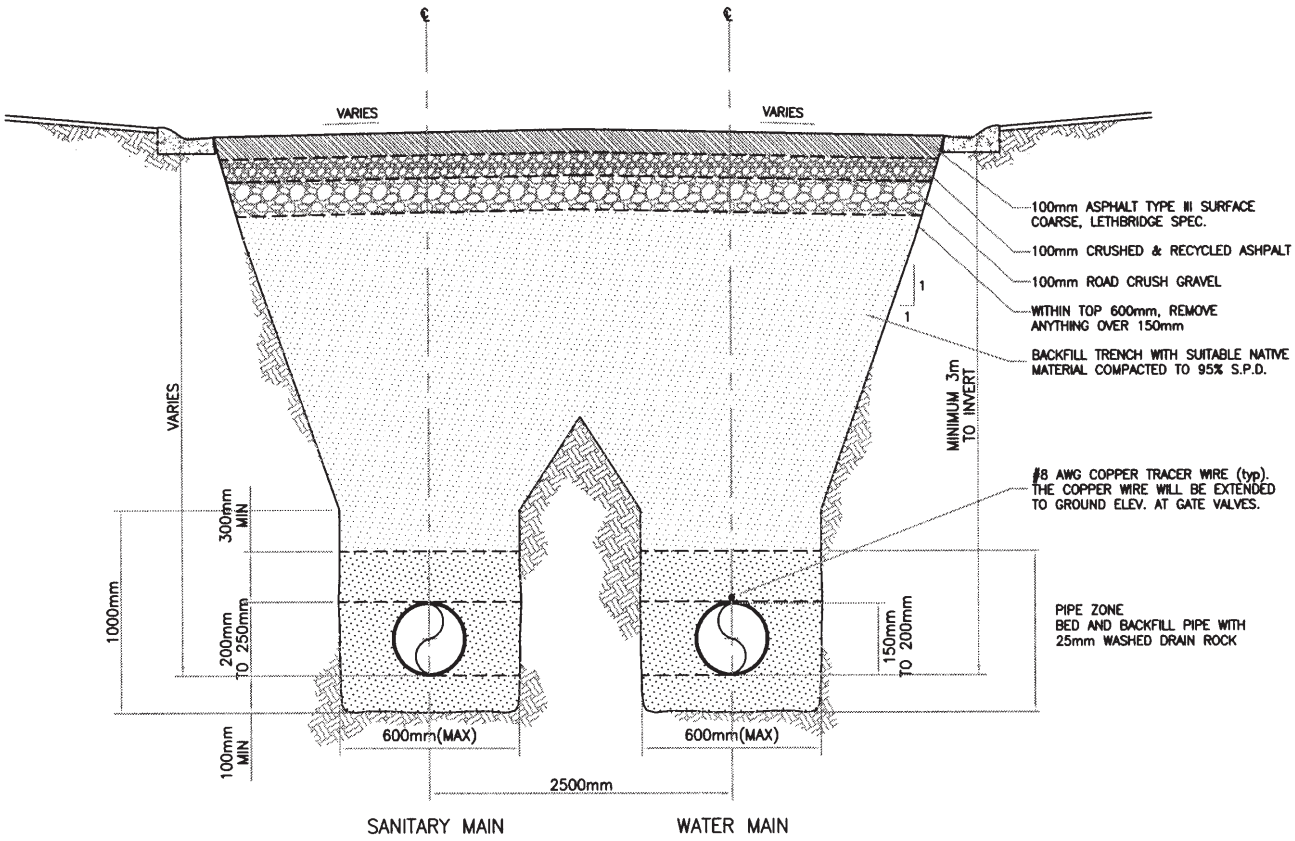

Project title/Titre du projet

Drawing title/Titre du dessin

SANITARY AND WATERMAIN
SIDE–BY–SIDE TRENCH DETAIL

Public Works and Government Services Canada
Travaux publics et Services gouvernementaux Canada

Client Services Team Southern Alberta Operations Branch
Le Client Entretient l'Équipe Alberta Méridional Branche d'Opérations

Canada

Client/client

Parks Canada Agency
L'Agence Parcs Canada

Western and Northern Region
Ouest et Nord du Canada

Surveyed by/Arpenté par	Drawn by/Dessiné par: T. SITTER	Date/Date: MARCH. 2008
Designed by/Conceptd par: J. PRENGER	Reviewed by/Revisé par: S. KING	Scale/Échelle: N.T.S.
PWGSC Project Manager/Administrateur de Projets TPSGC		
Client Acceptance/Acceptation du client	Approved by/Approuvé par	
Port Requisition Officer/Agent Responsable	PWGSC Project Manager/Administrateur de Projets TPSGC	
Project No./No. du projet: 421276	Asset No./No. du bien	Sheet No./No. de la feuille
Drawing Reference No./No. de référence du dessin: P–01		

NOTE: - PRECAST MANHOLE SECTIONS TO CONFORM TO A.S.T.M. DESIGNATION C478 (LATEST EDITION)

- ALL JOINTS TO BE SEALED WITH FLEXIBLE BUTYL RESIN SEALANT OR TYLOX SUPERSEAL GASKET
- ALL DIMENSIONS IN mm
- LADDER RUNGS SHALL BE CLEAR OF ALL LATERALS
- MANHOLE STEPS AT 400 o/c
- FOR BENCHING DETAIL SEE DRAWINGS S-07
- CEMENT TO BE TYPE 50 (SULPHATE RESISTANT)

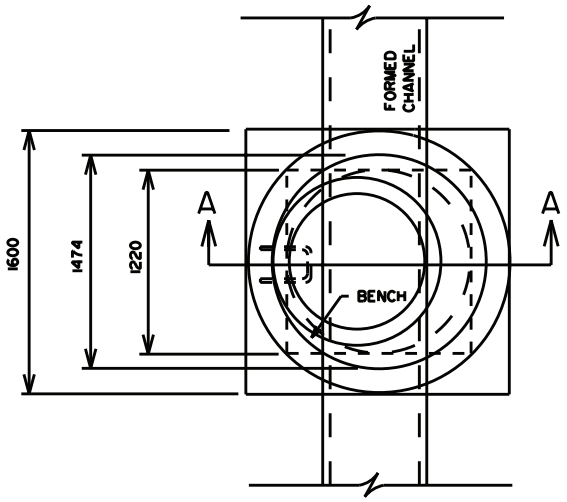

PLAN VIEW

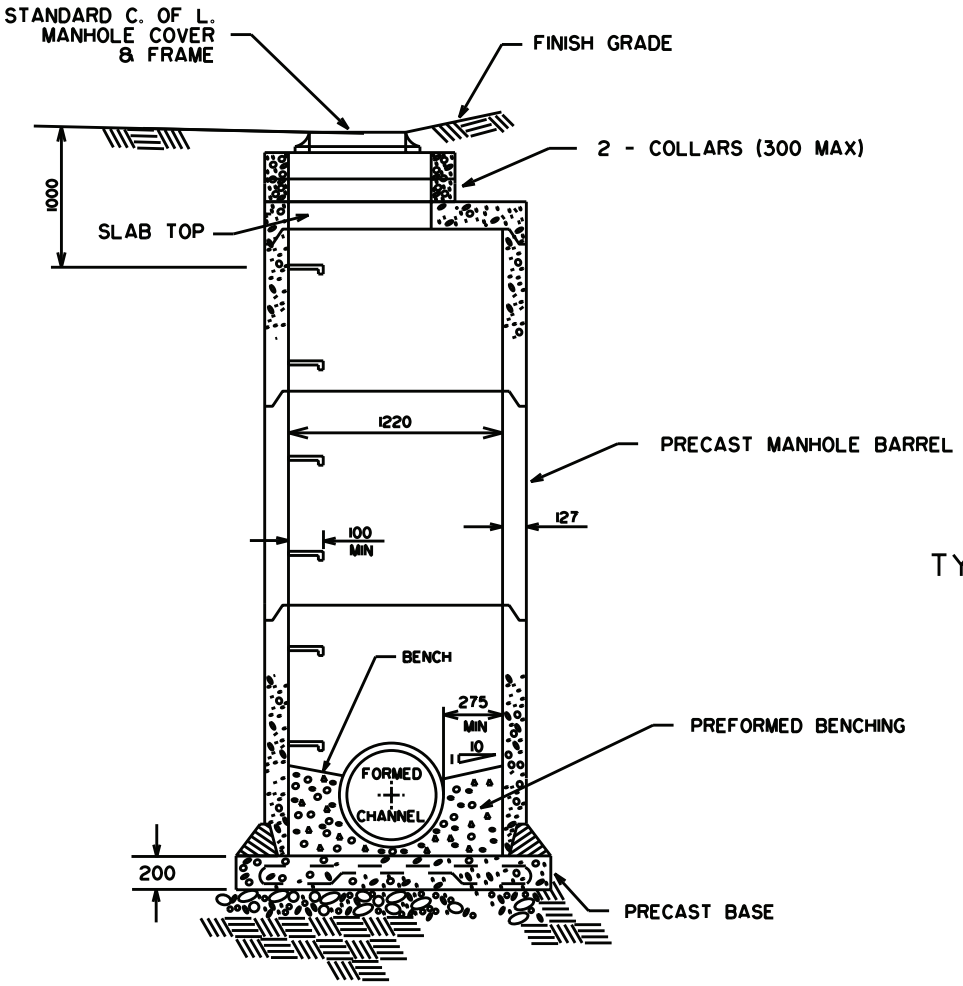

SECTION A-A

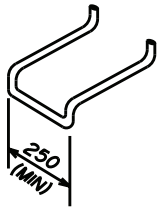

TYPICAL STEP DETAIL

NOTE: TO BE USED ONLY WHEN CONNECTING TO EXISTING MAINS 600 mm DIAMETER & SMALLER.

REVISED		
NOV 15. 2004	CITY OF Lethbridge INFRASTRUCTURE SERVICES	DRAWN P.R.A.
DEC 14. 2005		CHECKED
FEB 3. 2010		APPROVED
		SCALE N.T.S.
	STANDARD MANHOLE TYPE 1	DATE 97/03/08
		DWG NO S-01

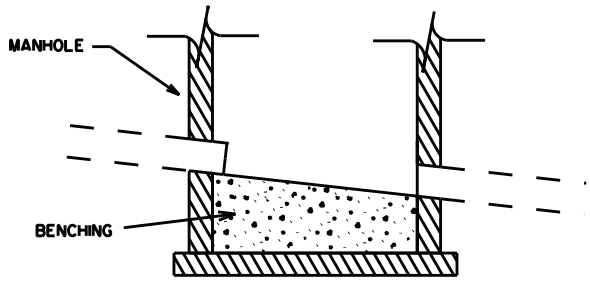

SECTION B-B
TYPICAL BENCHING

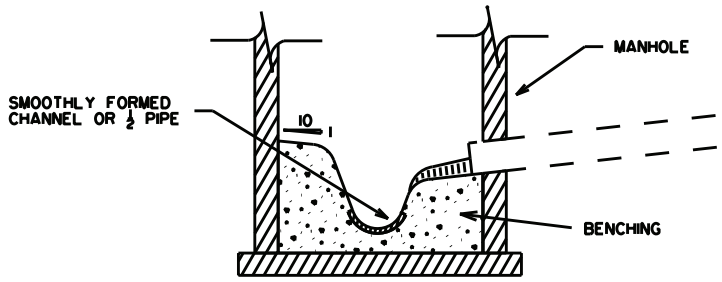

SECTION A-A
TYPICAL BENCHING

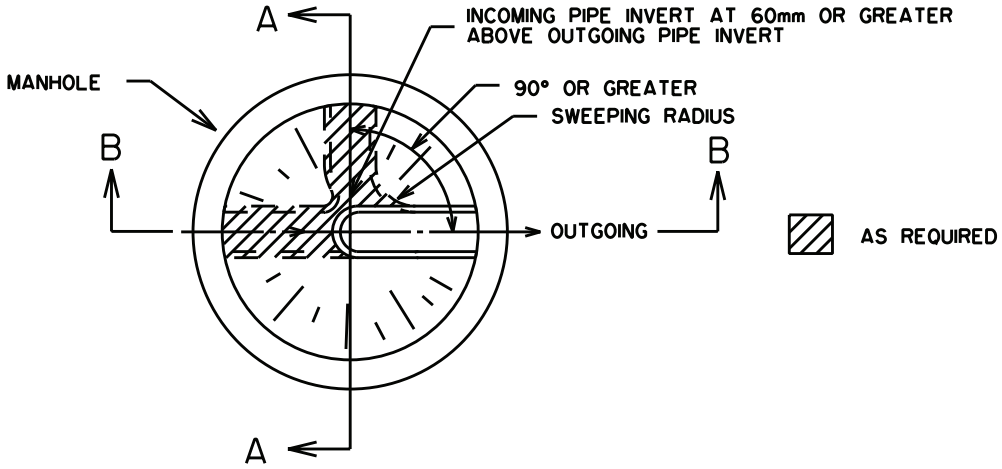

NOTE: - ALL DIMENSIONS IN MILLIMETERS.

- BENCHING SLOPE TO BE 10 : 1 FROM SPRING LINE OF PIPE (1/2 WAY UP)
- ON SANITARY SEWER USE EXTERIOR DROP MANHOLE WHEN INCOMING PIPE INVERT IS 600 OR GREATER ABOVE OUTGOING PIPE INVERT.
- NO SHARP CORNERS.
- BENCHING CONCRETE TO BE TYPE 50 SULPHATE RESISTANT CEMENT. MINIMUM COMPRESSIVE STRENGTH TO BE 30 MPa @ 28 DAYS.
- 30 mm DROP ACROSS M.H. BETWEEN INCOMING & OUTGOING INVERTS FOR PIPE GRADE UP TO 2%.
- 60 mm DROP ACROSS M.H. BETWEEN INCOMING & OUTGOING INVERTS FOR PIPE GRADES > 2%. AND < = 5%. ALSO FOR 90° TURNS.
- DROP ACROSS M.H. BETWEEN INCOMING & OUTGOING INVERTS TO BE @ GRADE OF PIPE FOR PIPE GRADES > 5%
- ALL INCOMING PIPE MUST BE GROUTED TO BE FLUSH WITH BENCHING IN MANHOLES.

REVISED	CITY OF Lethbridge INFRASTRUCTURE SERVICES	DRAWN P.R.A.
DEC 3/07		CHECKED
FEB 5/10		APPROVED
		SCALE N.T.S.
	TYPICAL BENCHING IN MANHOLES	DATE 97/02/18
		DWG NO S-07

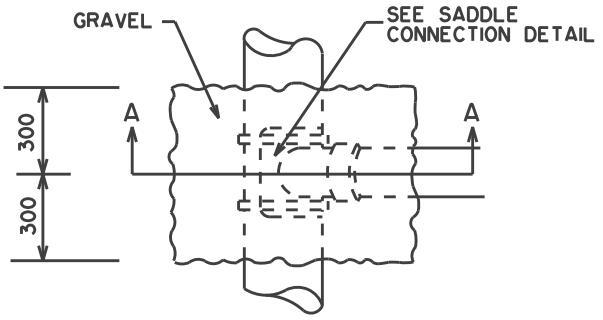

PLAN

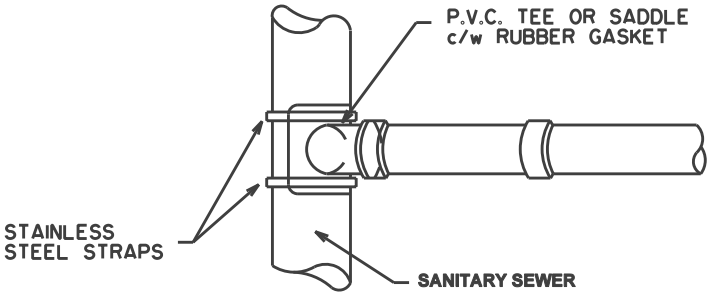

SADDLE CONNECTION DETAIL

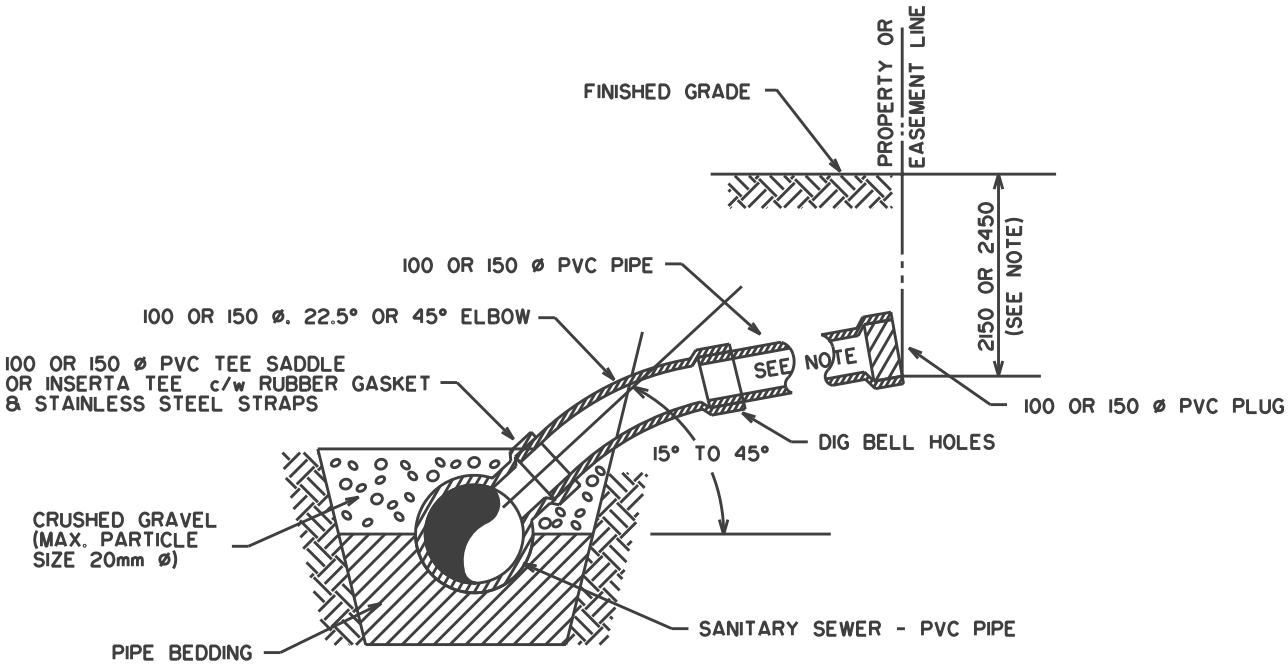

SECTION A-A

FOR SEWERS LESS THAN 3700 DEEP

NOTE:
- 150 ø SERVICES AT MIN 1%
- 100 ø SERVICES AT MINIMUM 2%
- ALL P.V.C. PIPE TO BE MUNICIPAL STUB SEWER PIPE. A.S.T.M. D3034. DR 28
- WHEN LOT SLOPES FROM BACK TO FRONT. THE DEPTH AT P/L TO BE 2150.
- WHEN LOT SLOPED FRONT TO BACK. THE DEPTH AT P/L TO BE 2450.
- SEWER SERVICES MUST TERMINATE WITH A BELL END
- SADDLES TO BE 400mm APART MIN.
- ALL DIMENSIONS ARE IN MILLIMETERS

REVISED	CITY OF Lethbridge INFRASTRUCTURE SERVICES	DRAWN P.R.A.
		CHECKED
		APPROVED
		SCALE N.T.S.
	P.V.C. SEWER SERVICE CONNECTION FOR MAINS LESS THAN 3.7 DEEP	DATE 97/03/10
		DWG NO S-08

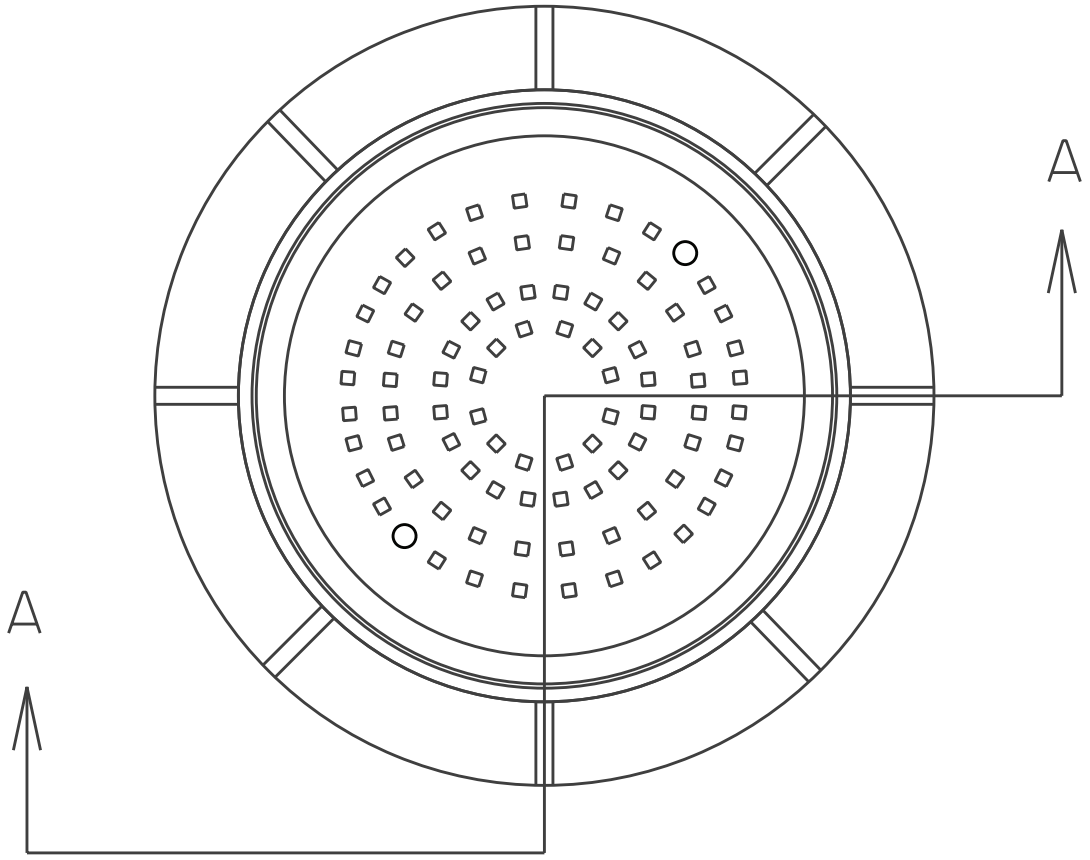

TOP VIEW

MATERIAL
CLASS 30 CAST IRON

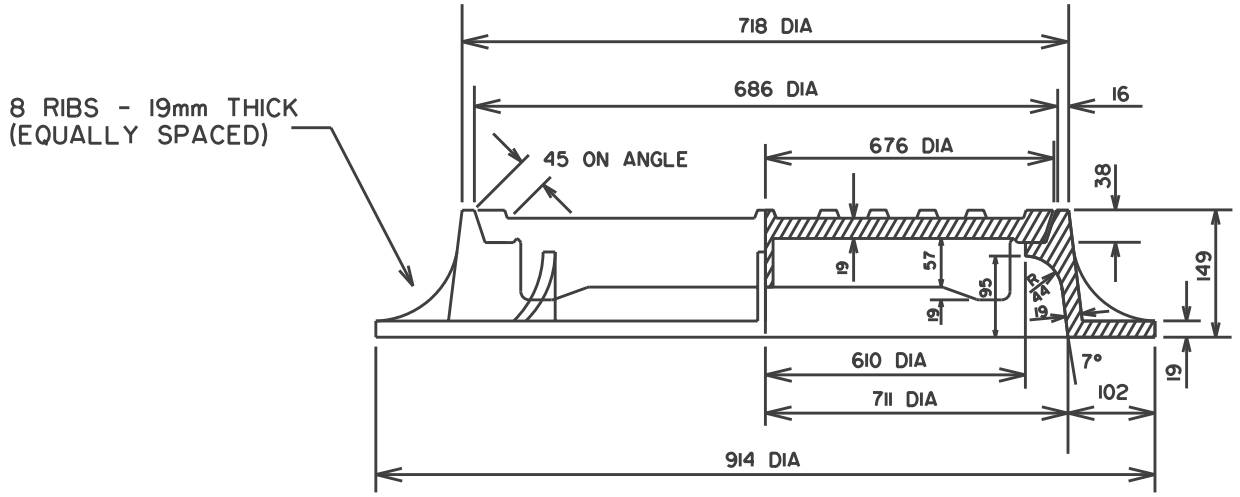

SECTION A-A

REVISED	CITY OF Lethbridge INFRASTRUCTURE SERVICES	DRAWN P.R.A.
		CHECKED
		APPROVED
		SCALE N.T.S.
	STANDARD MANHOLE FRAME AND COVER	DATE 97/03/11
		DWG NO S-10

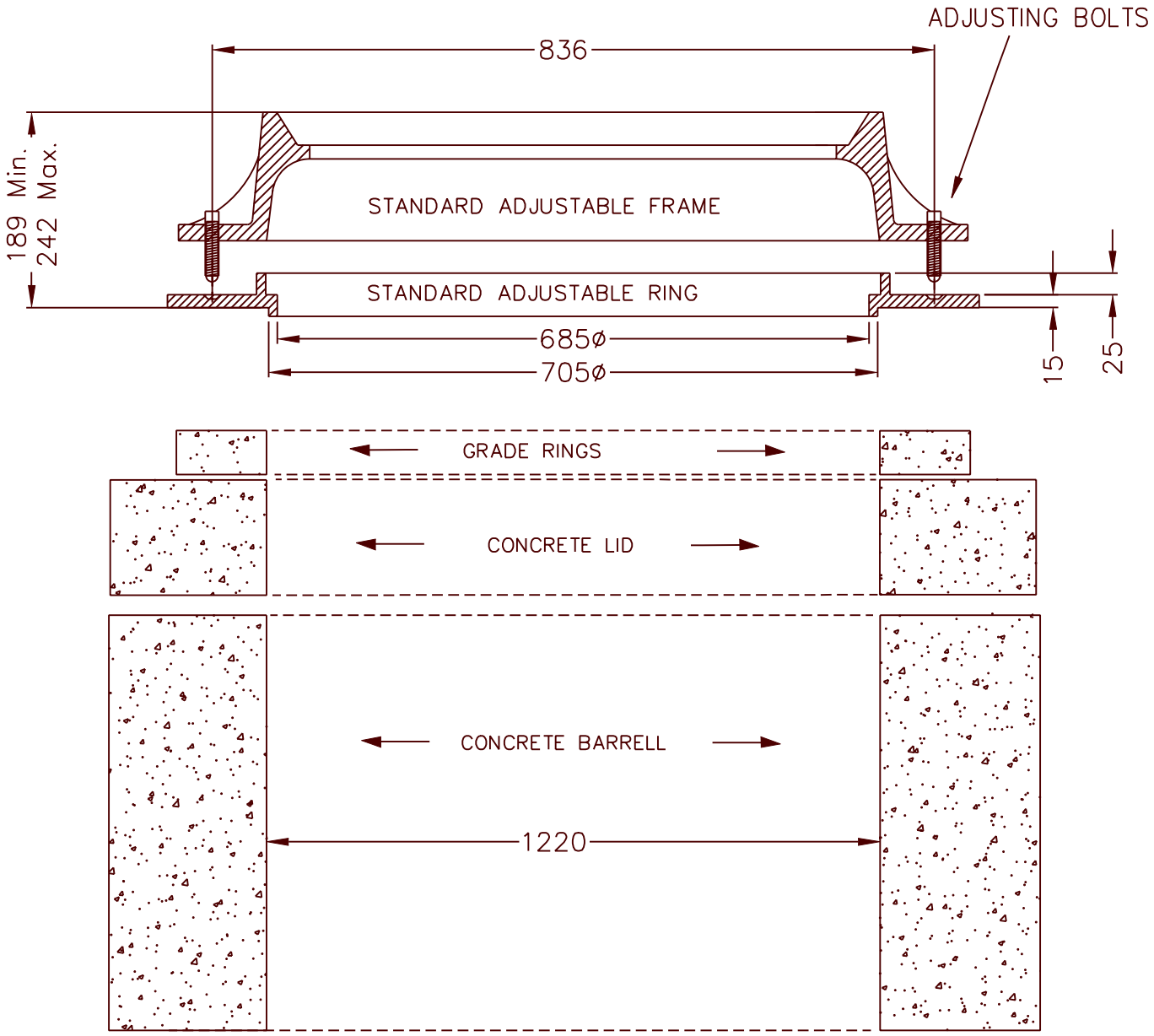

RING – DUCTILE IRON 65–45–12.

BOLTS – 5/8" NC LOW ALLOY HIGH STENGTH.

BOLTS – AVAILABLE IN 6" IF NEEDED.

REVISED	CITY OF Lethbridge INFRASTRUCTURE SERVICES	DRAWN
		CHECKED
		APPROVED
		SCALE NTS
	ADJUSTABLE FRAME INSTALLATION	DATE SEPT 10/2010
		DWG NO S–10–C

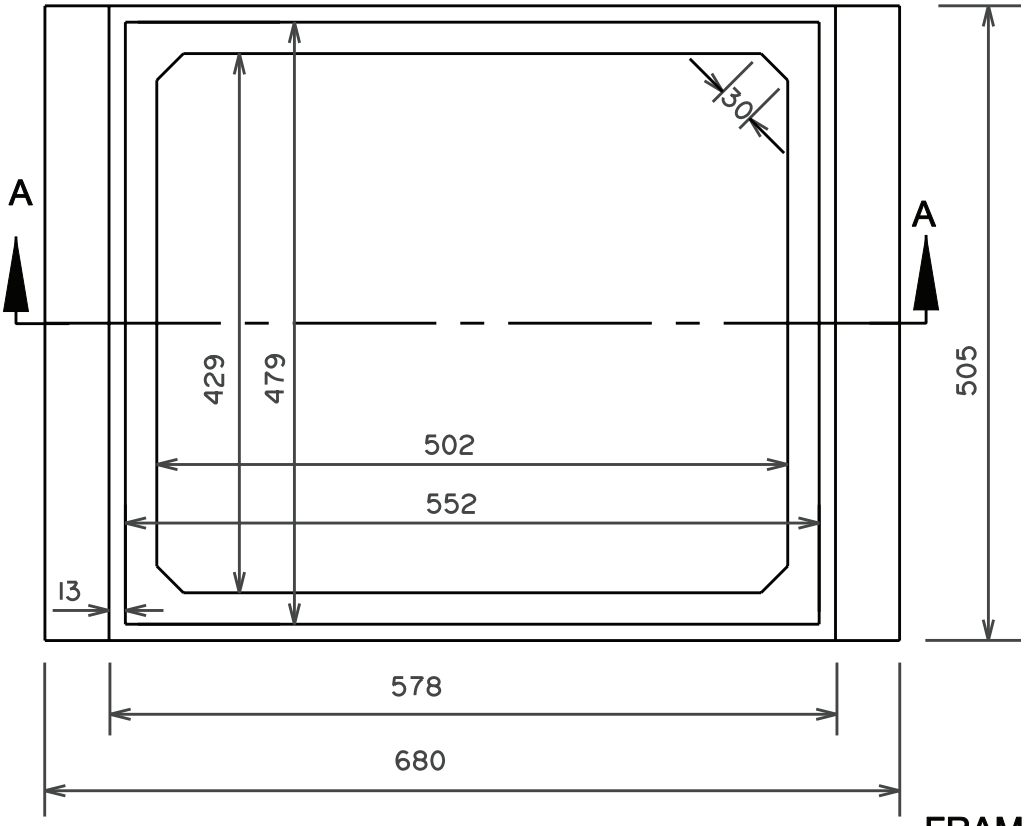

PLAN

FRAME MATERIAL :
CAST IRON
ASTM A48 CL 25B
OR CL 30

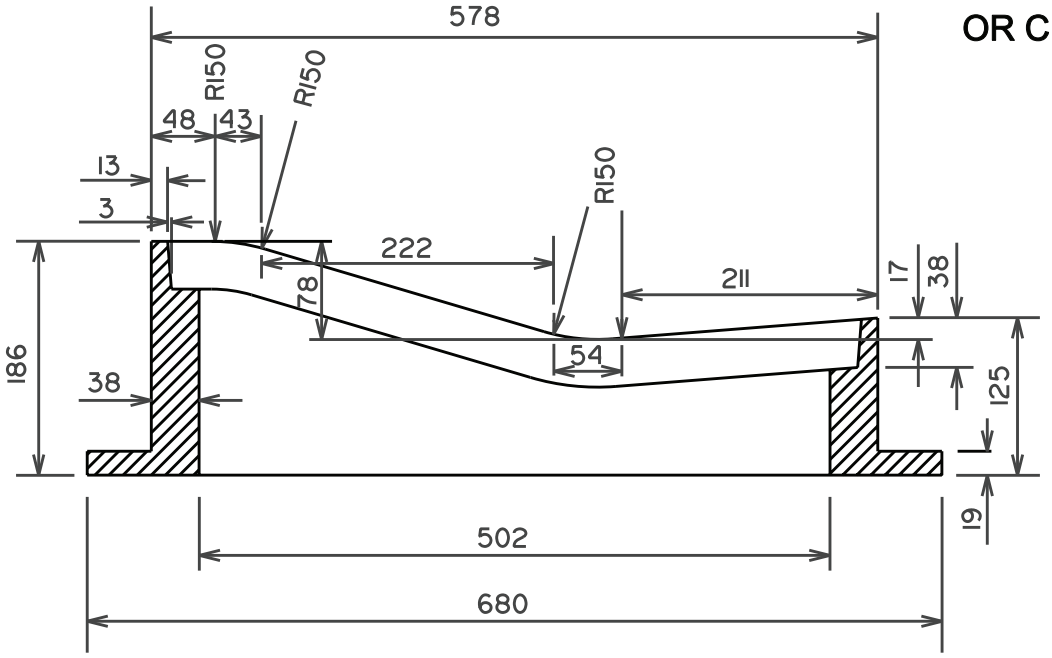

SECTION A-A

REVISED	CITY OF Lethbridge INFRASTRUCTURE SERVICES	DRAWN D.F.
		CHECKED
		APPROVED
		SCALE NTS
	SINGLE CATCH BASIN FRAME ROLLED CURB TYPE	DATE NOV 25/2004
		DWG NO S-11

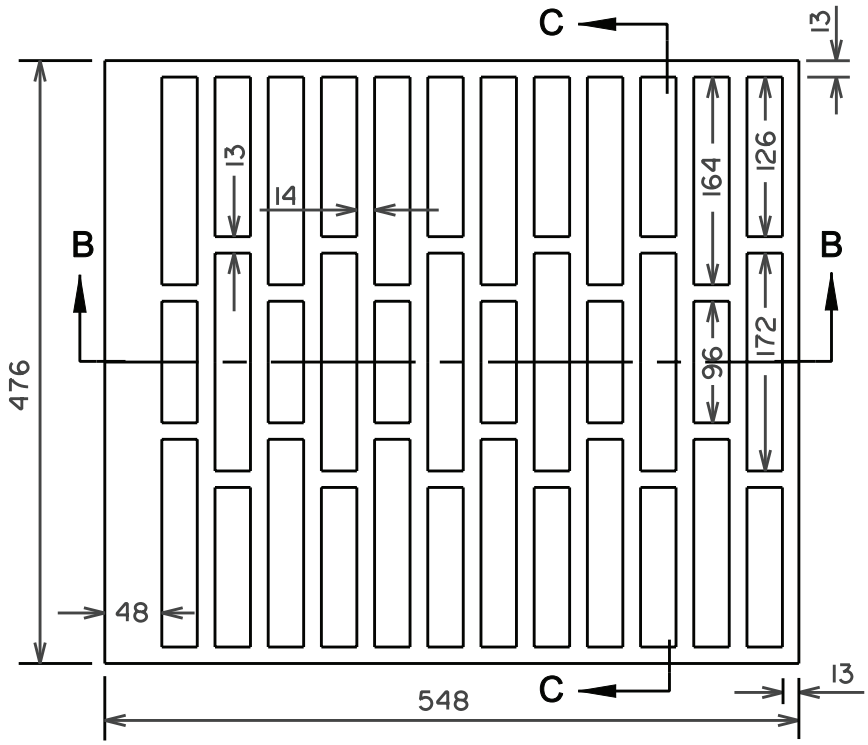

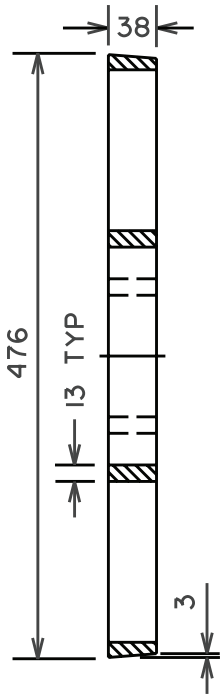

SECTION C-C

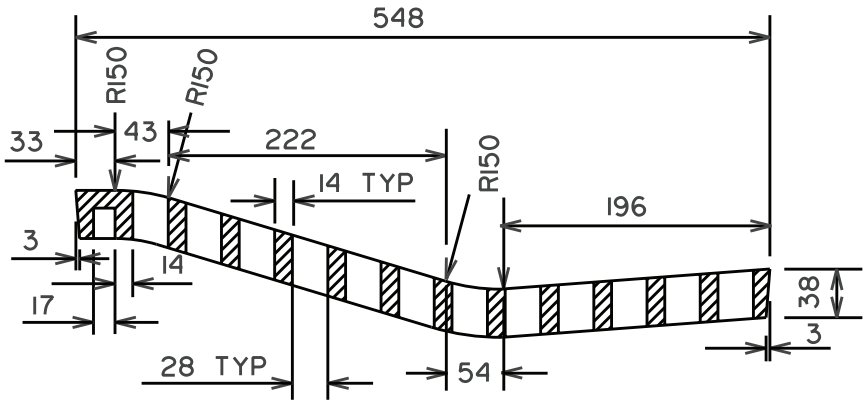

SECTION B-B

GRATE MATERIAL :
DUCTILE IRON
ASTM A536
GRADE 60-40-18

REVISED	CITY OF Lethbridge INFRASTRUCTURE SERVICES	DRAWN D.F.
		CHECKED
		APPROVED
		SCALE NTS
	CATCH BASIN GRATE ROLLED CURB TYPE	DATE NOV 25/2004
		DWG NO S-11B

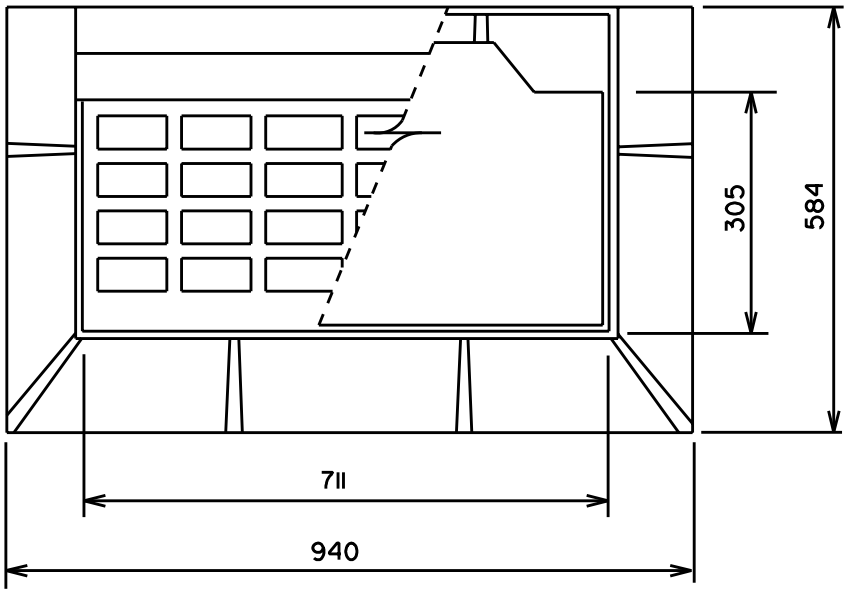

TOP VIEW

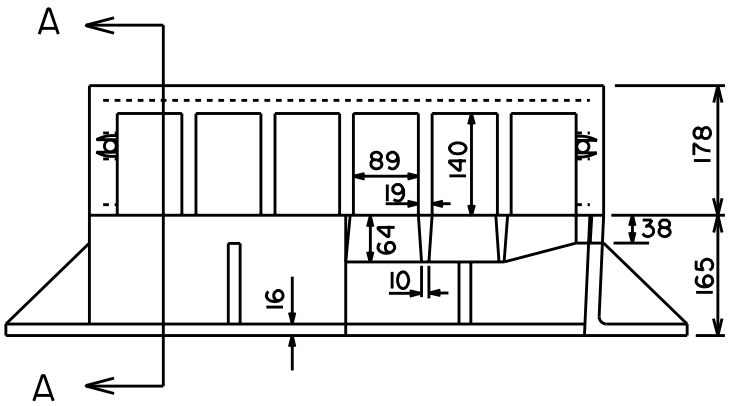

FRONT VIEW

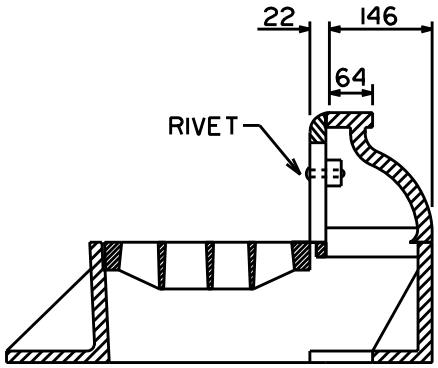

SECTION A-A

MATERIAL

CLASS 30 CAST IRON
FRAME, GRID & CURB, BACK

DUCTILE 65-45-12
CURB BACK GRID

REVISED	CITY OF Lethbridge INFRASTRUCTURE SERVICES	DRAWN P.R.A.
		CHECKED
		APPROVED
		SCALE N.T.S.
	STANDARD C.B. FRAME & GRATE STANDARD CURB TYPE	DATE 97/03/11
		DWG NO S-12

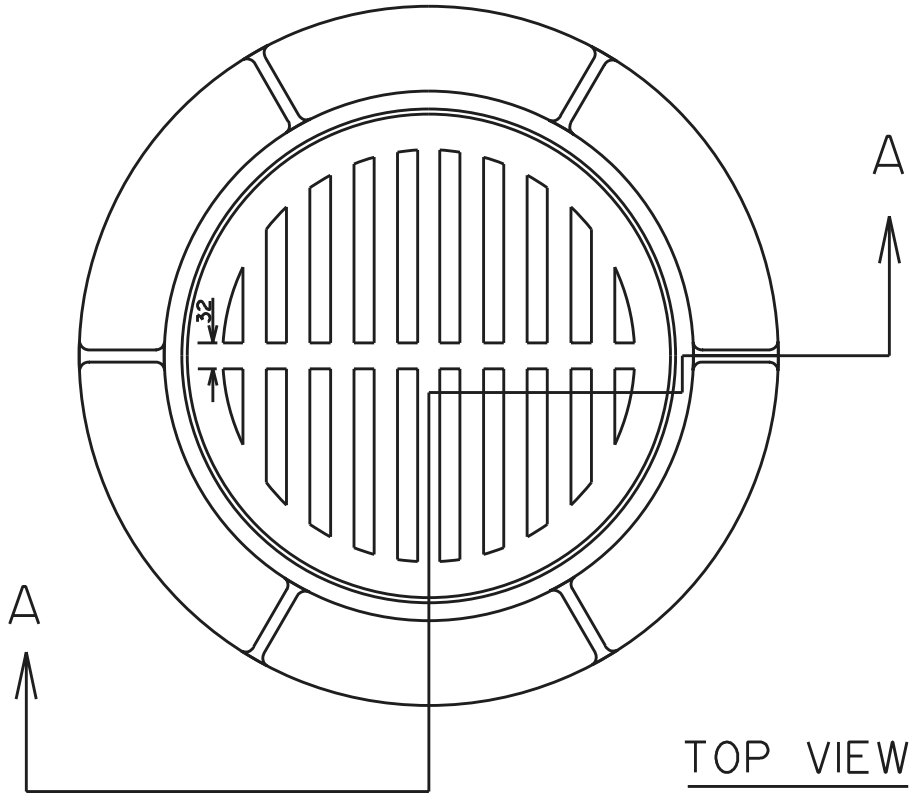

TOP VIEW

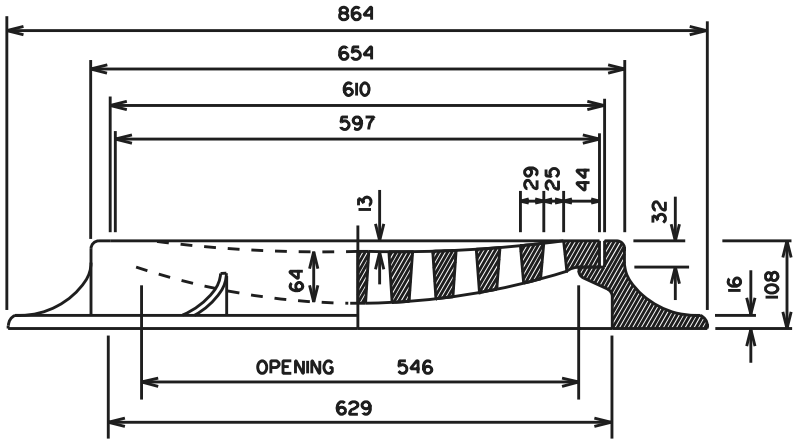

SECTION A-A

MATERIAL: CL. 30 CAST IRON

REVISED			
	CITY OF Lethbridge	DRAWN	P.R.A.
		CHECKED	
		APPROVED	
	INFRASTRUCTURE SERVICES	SCALE	N.T.S.
	STANDARD C.B. FRAME & GRATE ROUND TYPE	DATE	97/03/11
		DWG NO	S-13

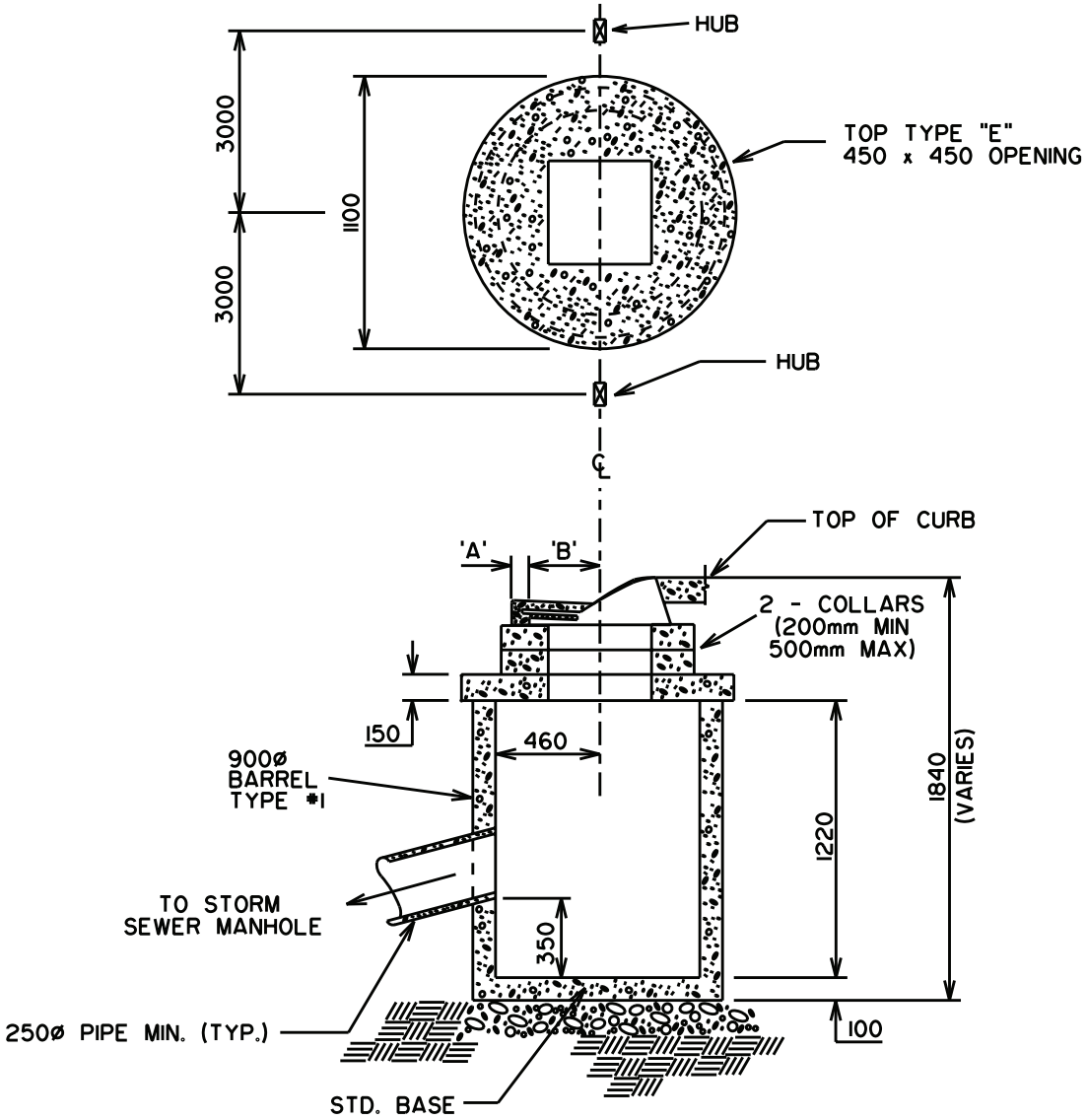

CURB & GUTTER WIDTH	DIMENSION	
	'A'	'B'
600mm	75mm	300mm
690mm	100mm	300mm

INSTALLING CATCH BASINS

- ALL JOINTS IN PRECAST SECTIONS TO BE SEALED WITH FLEXIBLE BUTYL RUBBER SEALANT (OR APPROVED EQUAL).
- PRECAST SECTION TO CONFORM TO A.S.T.M. C-478 (LATEST EDITION).
- ALL COVERS TO MEET CITY OF LETHBRIDGE STANDARDS.
- NO GRAVEL REQUIRED IF BASE IS SET ON UNDISTURBED SOIL. OTHERWISE 150 MINIMUM THICKNESS.
- ALL DIMENSIONS ARE IN MILLIMETRES.
- CEMENT TO BE TYPE 50 (SULFATE RESISTANT).

REVISED	CITY OF Lethbridge INFRASTRUCTURE SERVICES	DRAWN C.R.S.
		CHECKED
		APPROVED
		SCALE N.T.S.
	CATCH BASIN ROLLED CURB	DATE 97/03/06
		DWG NO S-14

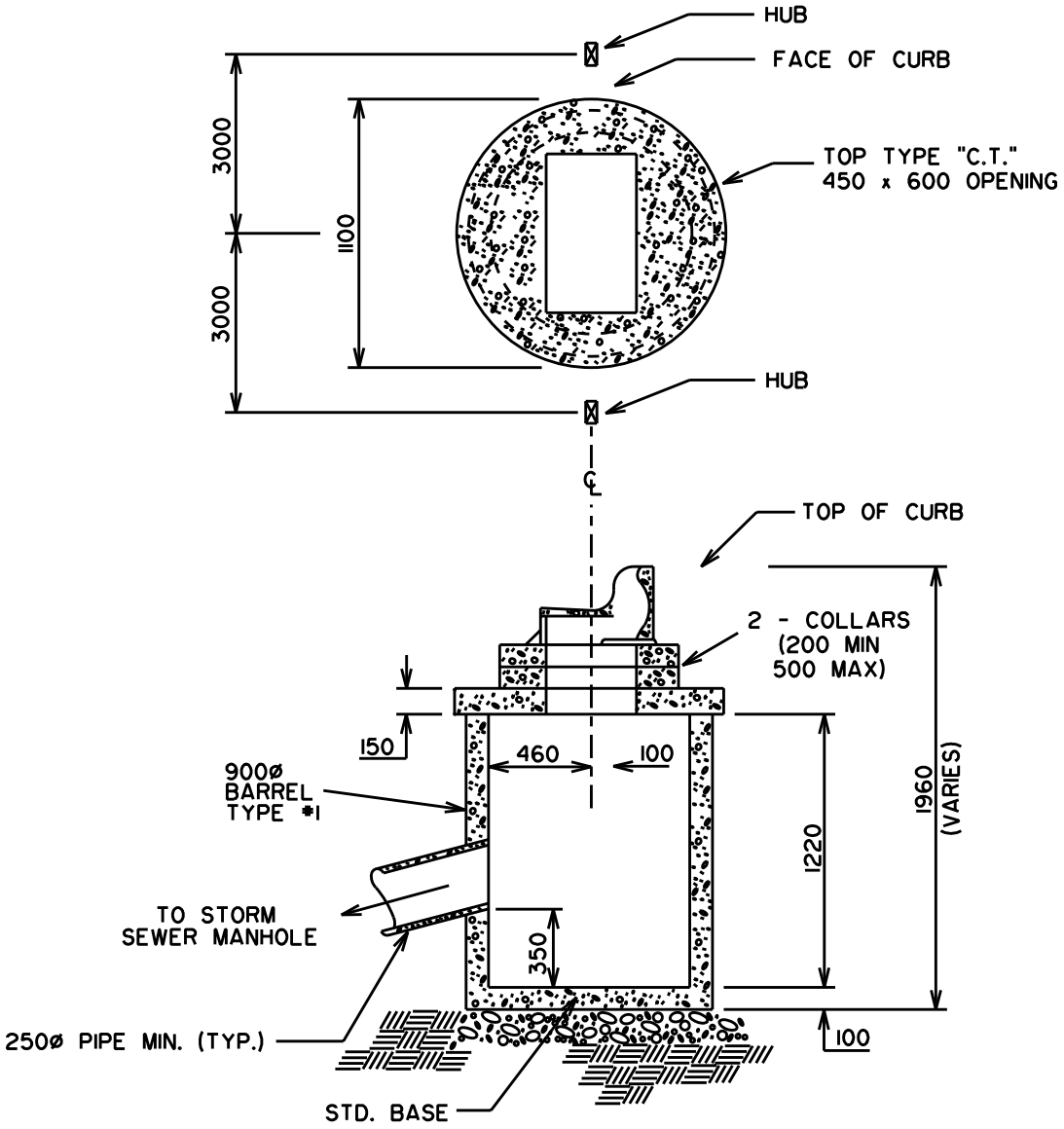

INSTALLING CATCH BASINS

- ALL JOINTS IN PRECAST SECTIONS TO BE SEALED WITH FLEXIBLE BUTYL RUBBER SEALANT (OR APPROVED EQUAL).
- PRECAST SECTION TO CONFORM TO A.S.T.M. C-478 (LATEST EDITION).
- ALL COVERS TO MEET CITY OF LETHBRIDGE STANDARDS.
- NO GRAVEL REQUIRED IF BASE IS SET ON UNDISTURBED SOIL. OTHERWISE 150 MINIMUM THICKNESS.
- ALL DIMENSIONS ARE IN MILLIMETRES.
- CEMENT TO BE TYPE 50 (SULFATE RESISTANT).

REVISED			
NOV 17, 2004	CITY OF Lethbridge INFRASTRUCTURE SERVICES	DRAWN	C.R.S.
		CHECKED	
		APPROVED	
		SCALE	N.T.S.
	TYPE 2 CATCH BASIN STANDARD CURB	DATE	97/03/06
		DWG NO	S-15

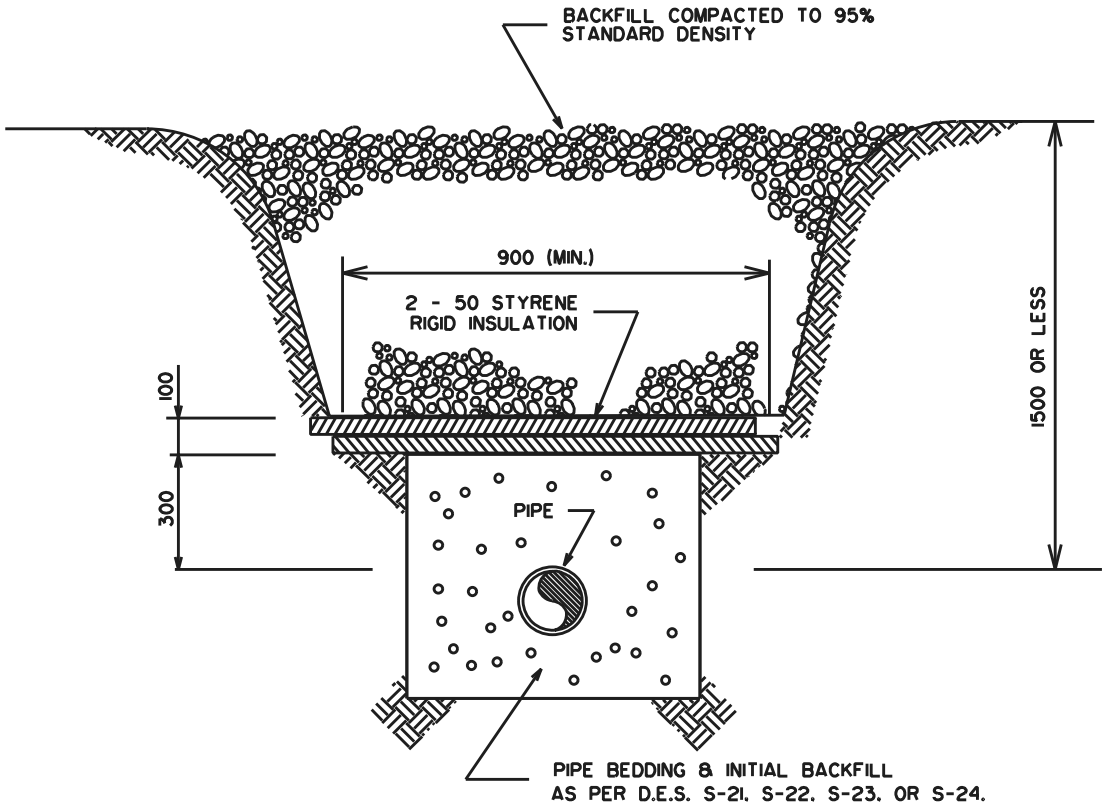

NOTES:

- ALL DIMENSIONS IN MILLIMETERS
- FROST SHIELD TO BE USED IN TRENCHES THAT ARE 1500mm OR LESS IN DEPTH.
- STAGGER JOINTS ON INSULATION 50mm ACROSS WIDTH OF DITCH.
- STAGGER JOINTS OF INSULATION ½ SHEET ALONG LENGTH OF DITCH.
- INSULATION TO BE 'STYROFOAM - SM' BRAND EXTRUDED EXPANDED POLYSTYRENE FOAM MANUFACTURED BY DOW CHEMICAL CANADA INC. OR APPROVED EQUAL.

REVISED	CITY OF Lethbridge INFRASTRUCTURE SERVICES	DRAWN P.R.A.
		CHECKED
		APPROVED
		SCALE N.T.S.
	STANDARD FOR FROST SHIELD FOR MAINS & SERVICES	DATE 97/03/11
		DWG NO S-19

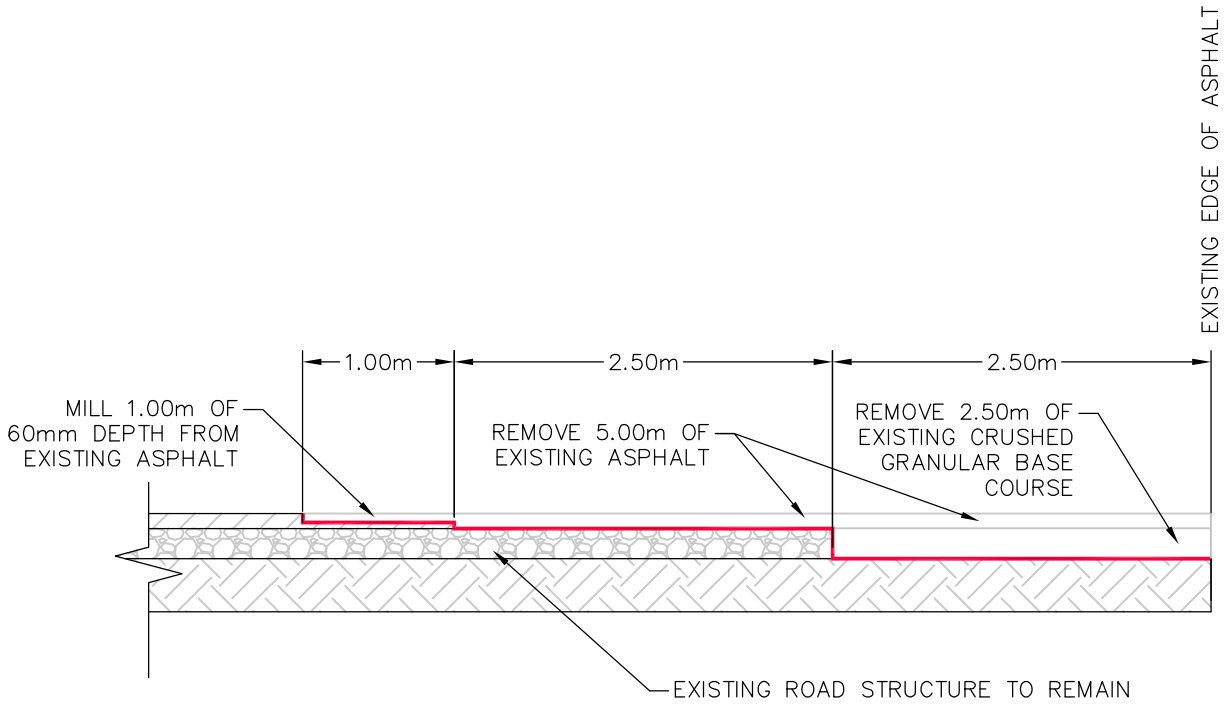

DATE	REVISION	BY
FILE:	str_30.dwg	

CITY OF Lethbridge
INFRASTRUCTURE SERVICES

ROAD EXTENSION BETWEEN PHASES

DRAWN:	R.J.K.
DESIGN:	R.J.K.
CHECKED:	R.A.B.
APPROVED:	D.L.J.
SCALE:	N.T.S.
DATE:	14/02/2011
DWG NO:	STR_30

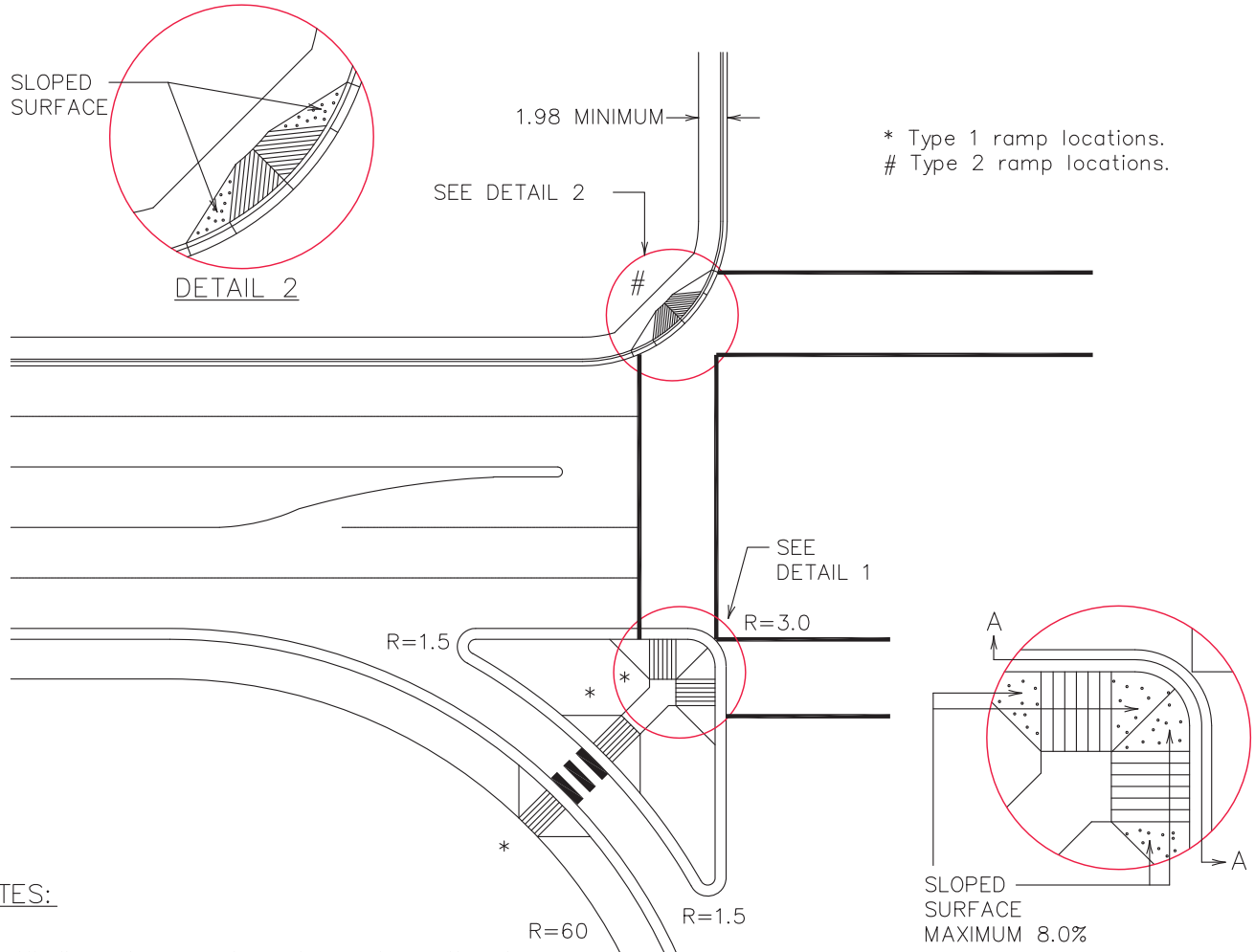

NOTES:

- All dimensions are in metres unless otherwise specified.
- Sidewalk ramps must provide access directly to crosswalks.
- The selection of curb ramp type is dependent on the location of the crosswalk relative to the curb face. Where the curb return radius is greater than or equal to 4.0m one Type 2 ramp can be used. Where the curb return radius is less than 4.0m two Type 1 ramps are required.
- Where crosswalks are controlled by signals with a push–button system, the sidewalks and ramps must allow access by wheelchair to the push button.
- Refer to Drawing Nos. STR 11.1 and 11 .2 for details of Type 1 and Type 2 ramps.
- On a sharp corner where two Type 1 ramps are being used, the slope on the flared areas between the two ramps can be less than the 0.08 m/m maximum shown. This will provide a smoother sidewalk for general use especially for pedestrians who are not using the crosswalk.

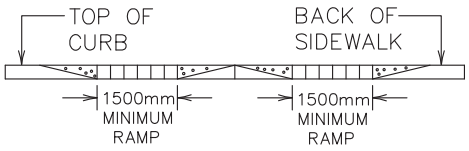

SECTION A–A

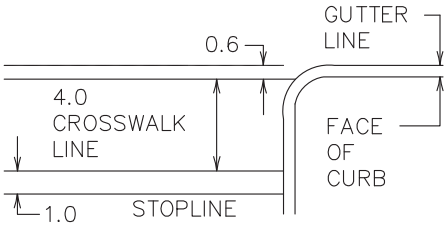

DETAIL SHOWING CROSSWALK DIMENSIONS

DATE	REVISION	BY
02/11	REVISED SHAPE	R.J.K.
FILE:	str_11.0.dwg	

CITY OF Lethbridge

INFRASTRUCTURE SERVICES

TYPICAL LAYOUT OF CROSSWALKS AND LOCATION AND TYPE OF SIDEWALK RAMPS AT URBAN INTERSECTIONS

DRAWN:	C.R.S.
DESIGN:	R.J.K.
CHECKED:	R.A.B.
APPROVED:	D.L.J.
SCALE:	N.T.S.
DATE:	02/10/1991
DWG NO:	STR 11.0

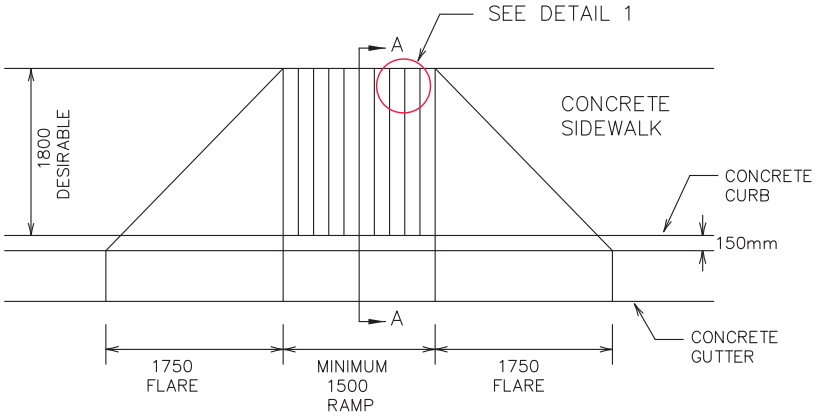

TYPICAL PLAN VIEW

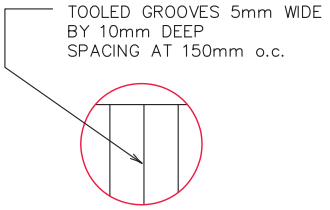

DETAIL 1

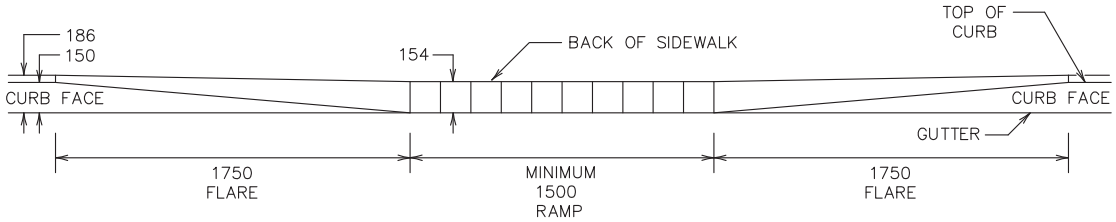

TYPICAL ELEVATION

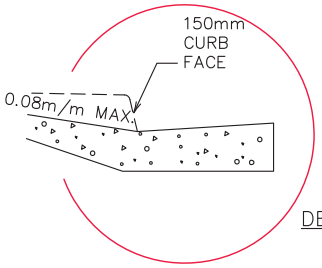

DETAIL 2

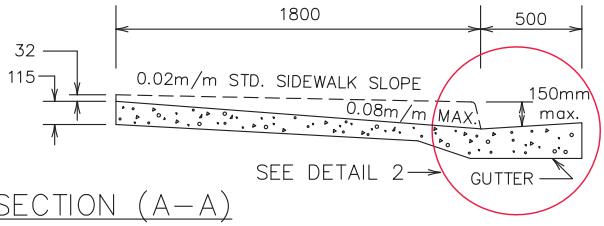

TYPICAL CROSS SECTION (A–A)

NOTES:

- All dimensions are in millimetres unless otherwise specified.
- Ramps for users of wheelchairs/bicycles should be located at all junctions of crosswalks and sidewalks.
- Grooves on sidewalk ramps are to alert persons who are visually impaired of the curb–cut and a street corossing.
- Where crosswalks are controlled by signals with a push–button system, the sidewalks and ramps must allow access by wheelchair to the push–button.
- Concrete sidewalks, curbs and ramps to be poured monolithically.
- Minimum width of ramp is 1500mm. It may be necessary to build wider ramps in busy urban areas where the volume of pedestrian traffic is high.
- Maximum ramp slope is 0.08m/m.
- Where the sidewalk is less than 1800m wide, the 0.08m/m maximum slope should not be exceeded and therefore the back of the sidewalk must be lowered accordingly.
- Refer to Drawing No. STR 11.0 for typical layout of crosswalks and location and the type of ramp to be used.
- For details of typical ramps for 90 degree corners, refer to Drawing No. STR 11.2.

DATE	REVISION	BY
FILE:	str_11.1.dwg	

CITY OF Lethbridge

INFRASTRUCTURE SERVICES

CONCRETE SIDEWALK RAMP FOR WHEELCHAIR OR BICYCLE ON TANGENT (TYPE 1)

DRAWN:	C.R.S.
DESIGN:	C.R.S.
CHECKED:	P.R.A.
APPROVED:	B.L.H.
SCALE:	N.T.S.
DATE:	10/10/1991
DWG NO:	STR 11.1

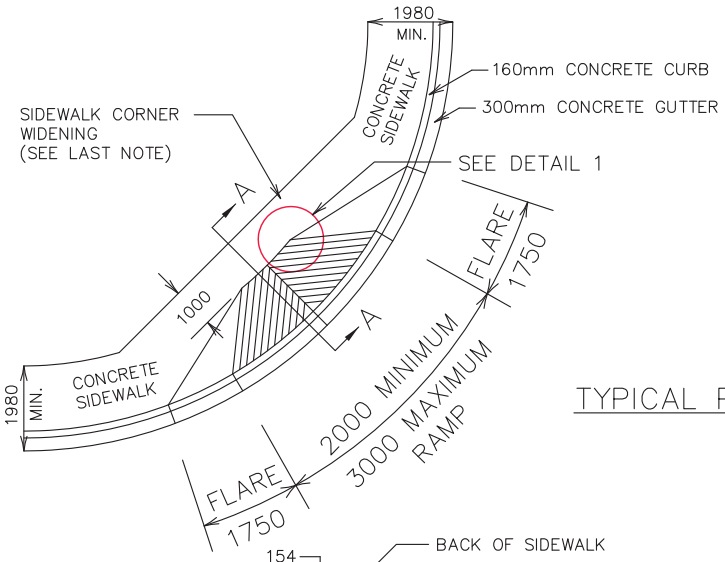

TYPICAL PLAN VIEW

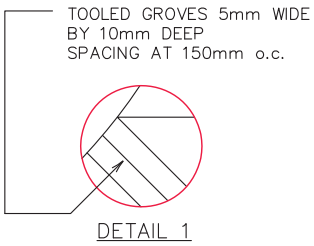

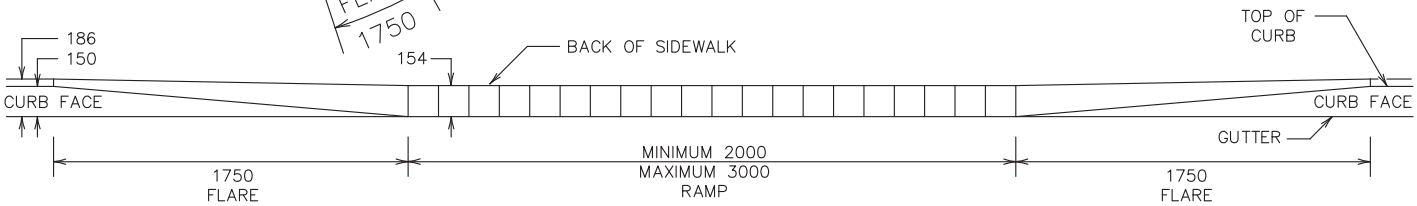

TYPICAL ELEVATION

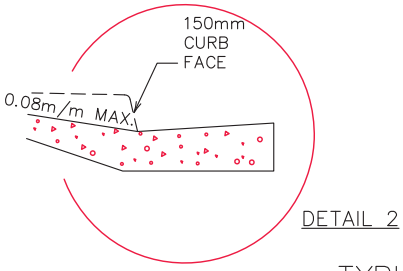

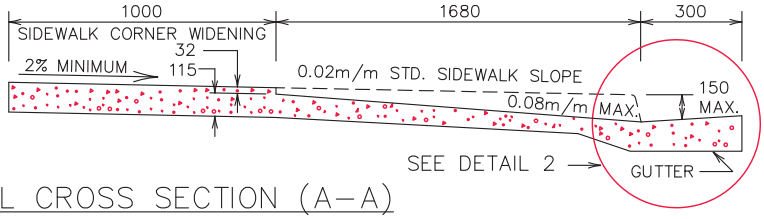

TYPICAL CROSS SECTION (A–A)

NOTES:

- All dimensions are in millimetres unless otherwise specified.
- Ramps for users of wheelchairs/bicycles should be located at all junctions of crosswalks and sidewalks. Ramp must be located within a crosswalk.
- Grooves on sidewalk ramps are to alert persons who are visually impaired of the curb–cut and a street crossing.
- Where crosswalks are controlled by signals with a push–button system, the sidewalks and ramps must allow access by wheelchair to the push–button.
- Concrete sidewalks, curbs and ramps to be poured monolithically.
- Minimum width of ramp is 2000mm. It may be necessary to build wider ramps in busy urban areas where the volume of pedestrian traffic is high.
- Maximum ramp slope is 0.08m/m.
- Where the sidewalk is less than 1800m wide, the 0.08m/m maximum slope should not be exceeded and therefore the back of the sidewalk must be lowered accordingly.
- Refer to Drawing No. STR 11.0 for typical layout of crosswalks and location and the type of ramp to be used.
- For details of typical ramps for tangent sections, refer to Drawing No. STR 11.1.
- Where right–of–way is available, the sidewalk is to be widened at corner locations as shown so that at least a 1.0m width of minimum 2% sloped sidewalk is provided adjacent to the ramp.

DATE	REVISION	BY
02/11	REVISED SHAPE	R.J.K.
05/11	RECORD REVISION	R.J.K.
05/12	SIZE REVISION	R.J.K.
FILE:	str_11.2.dwg	

CITY OF Lethbridge

INFRASTRUCTURE SERVICES

CONCRETE SIDEWALK RAMP FOR WHEELCHAIR OR BICYCLE ON CORNER (TYPE 2)

DRAWN:	C.R.S.
DESIGN:	R.J.K.
CHECKED:	R.A.B.
APPROVED:	D.L.J.
SCALE:	N.T.S.
DATE:	10/11/1991
DWG NO:	STR 11.2

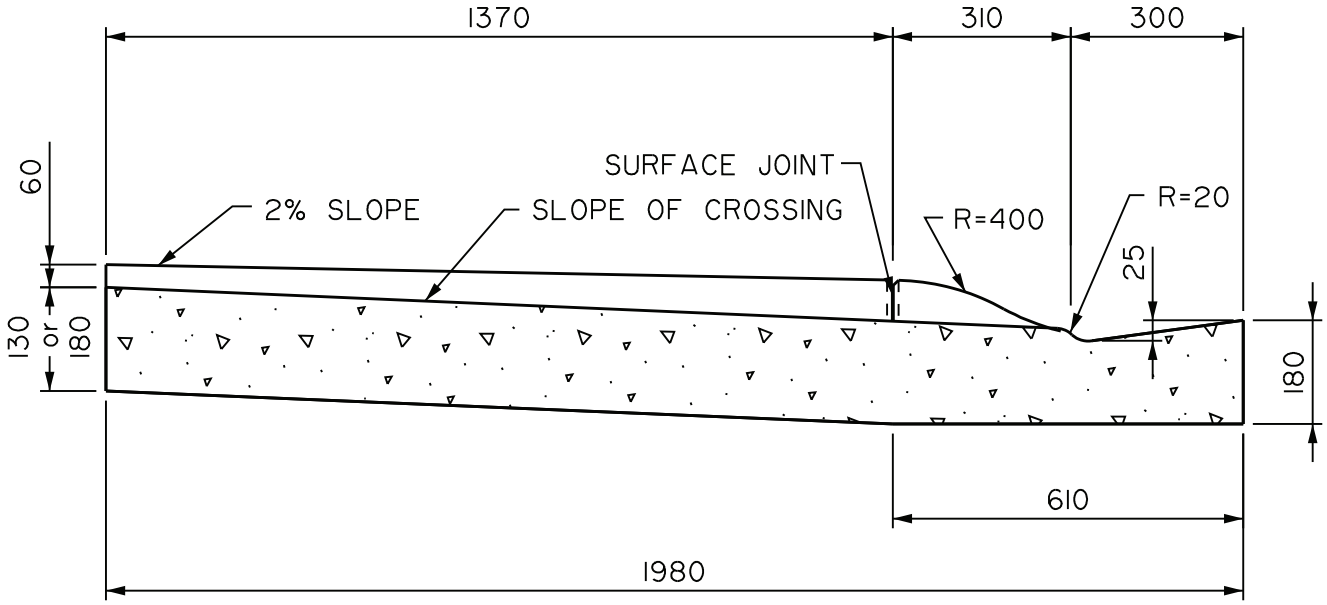

NOTE:
- RESIDENTIAL CROSSING TO BE MIN. 130mm THICK. LANE OR COMMERCIAL CROSSING TO BE MIN. 180mm THICK.

REV: CURB RADII TO 20. DI FROM TOP OF CROSSING TO SIDEWALK 60

City of Lethbridge
INFRASTRUCTURE

CROSSING THROUGH COMBINED SIDEWALK ROLLED CURB AND GUTTER

DRAWN	jrg
CHECKED	
APPROVED	
SCALE	N.T.S.
DATE	99/05/03
REV. DATE	99/12/14
DWG NO	STR_14_0

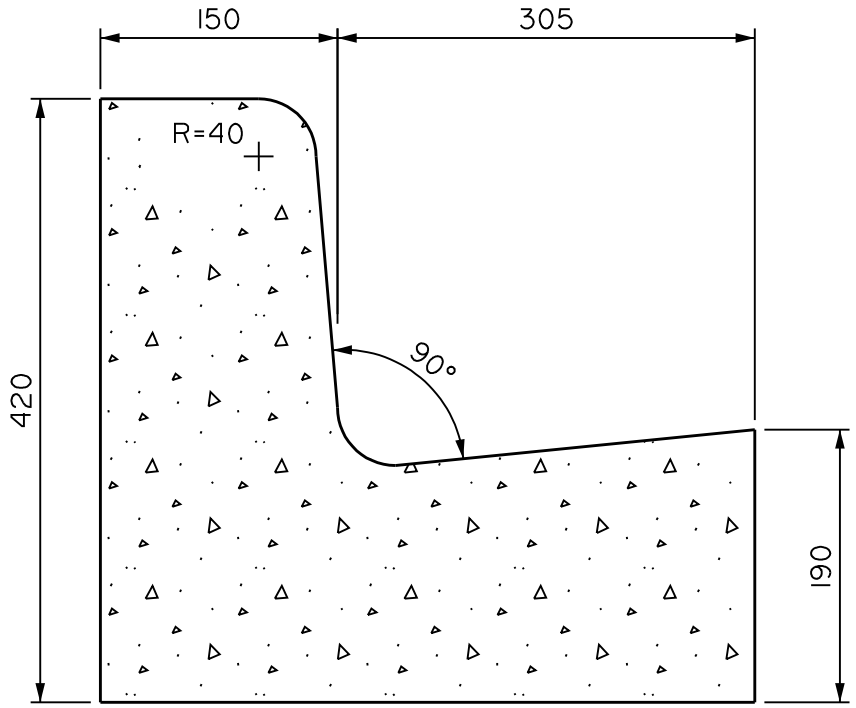

NOTE:
- SLOPES ON GUTTERS VARY ON CURVES AND TRANSITION DEPENDING ON SUPERELEVATION.

	City of Lethbridge INFRASTRUCTURE	DRAWN jrg CHECKED APPROVED
	HIGH BACK STANDARD CURB AND GUTTER	SCALE N.T.S. DATE 99/05/03 REV. DATE
		DWG NO STR_04_1

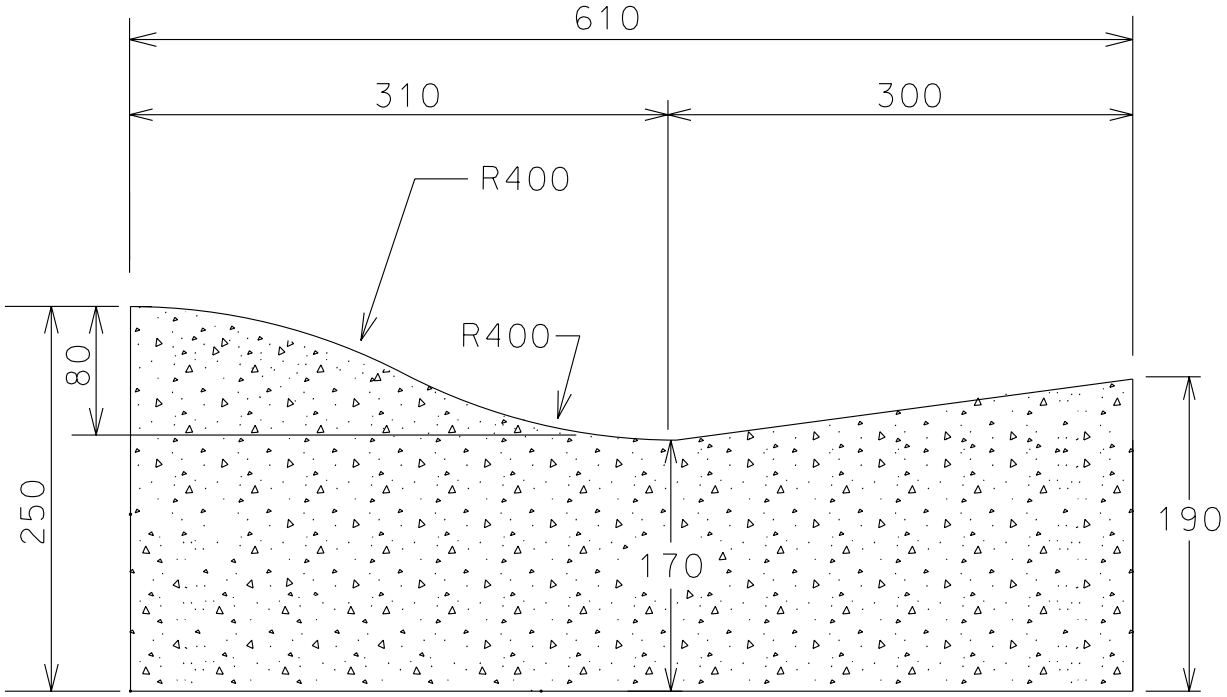

REVISED	CITY OF Lethbridge INFRASTRUCTURE SERVICES	DRAWN R.J.K
		CHECKED R.A.B.
		APPROVED
		SCALE NTS
	LOW PROFILE ROLLED CURB	DATE OCT 31/2005
REVISED 03/14/07 R.J.K.		DWG NO STR-06.1.dgn

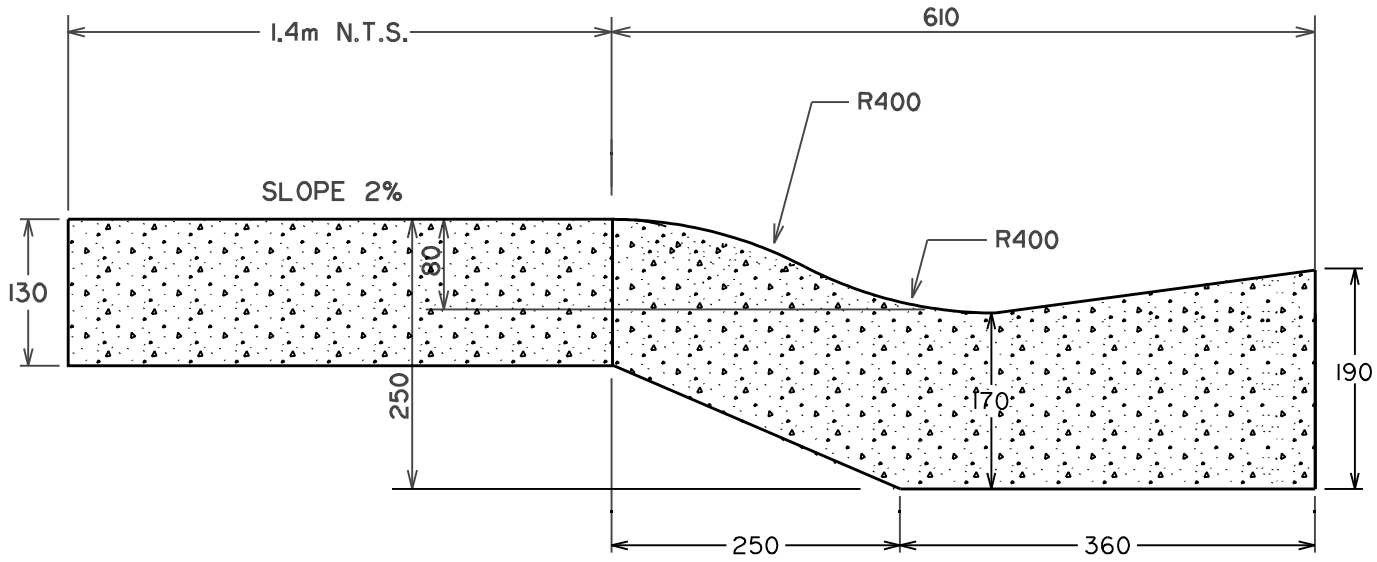

REVISED			
	CITY OF Lethbridge INFRASTRUCTURE SERVICES	DRAWN	D.Mc.
		CHECKED	
		APPROVED	
		SCALE	NTS
	COMBINED SIDEWALK ROLLED CURB GUTTER	DATE	OCT 31/2005
		DWG NO	STR-09.dgn

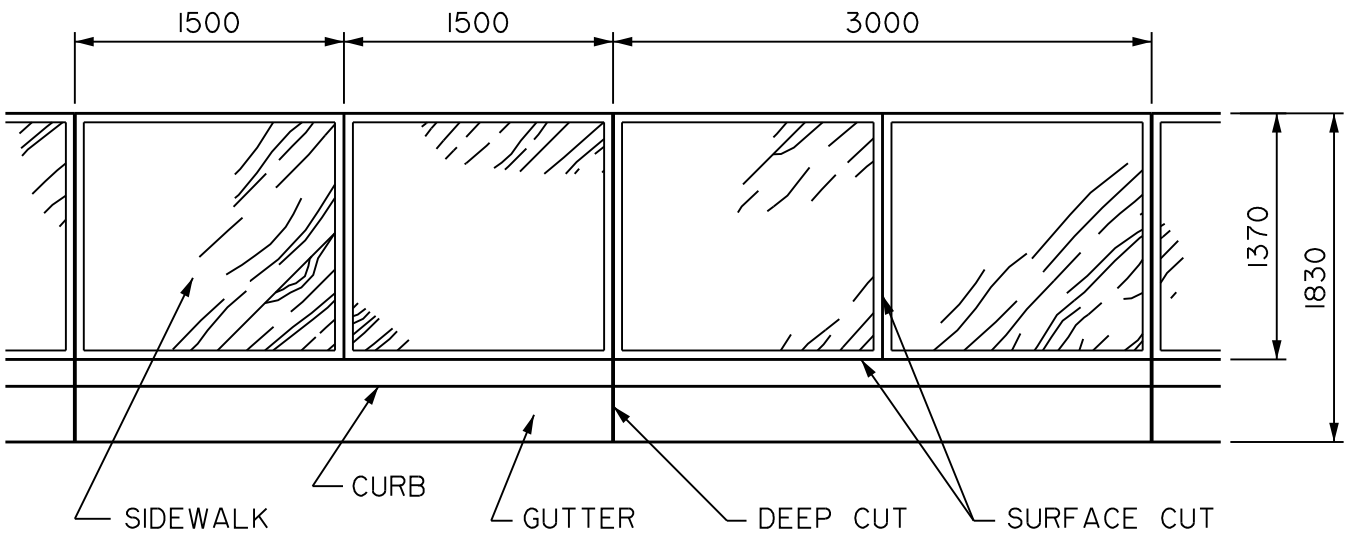

NOTE:
- SIDEWALK SURFACE TO BE BRUSHED FINISHED
- 6mm x 32mm DEEP EXPANSION JOINT TO BE LOCATED AT 3000mm INTERVAL.

	City of Lethbridge INFRASTRUCTURE	DRAWN jrg CHECKED APPROVED
	SIDEWALK JOINTING	SCALE N.T.S. DATE 99/05/03 REV. DATE
		DWG NO STR_10

LINE TYPE	PATTERN	USE
STOP BAR	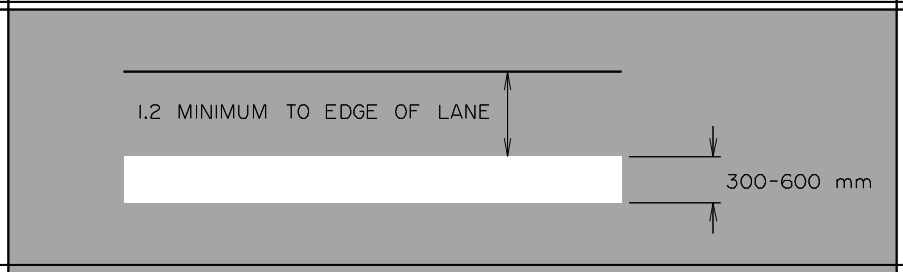	STOP LINE
STANDARD CROSSWALK	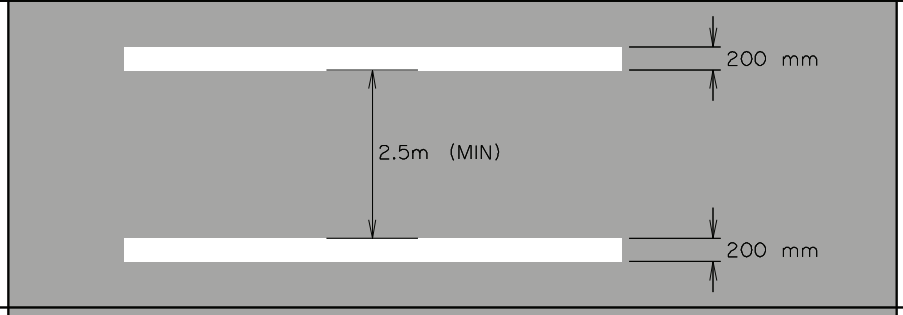	STANDARD CROSSWALK
ZEBRA CROSSWALK	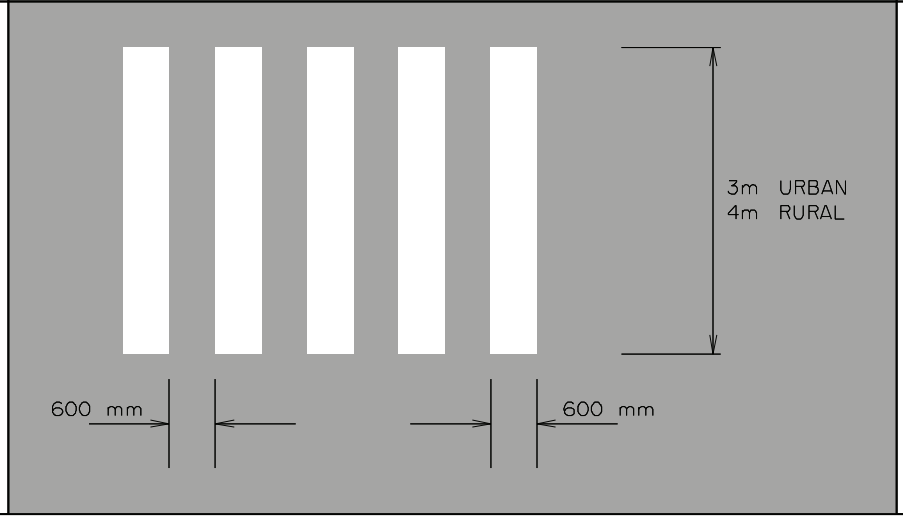	ZEBRA CROSSWALK FOR ADDED VISIBILITY

No.	DESCRIPTION	BY	DATE
2		---	
1	Dwg. no. changed from TCS-C-3.01	B.B.	Mar/03

Alberta TRANSPORTATION

FIGURE TCS-C-301

Date: MAY 1999

TRANSVERSE PAVEMENT MARKINGS

DIMENSIONS AND DEFINITIONS

Prepared By: R.M.	Checked By: S.J.M.	Scale: N.T.S.	Section C3

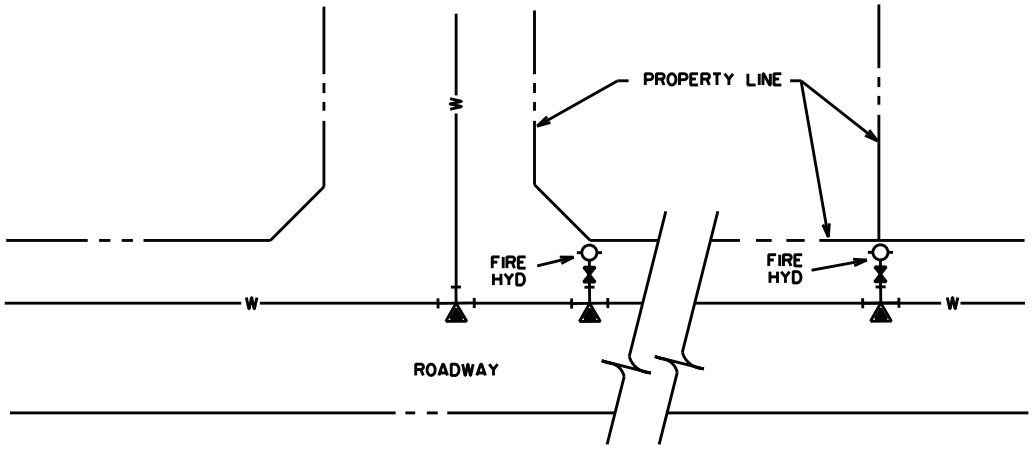

TYPICAL LOCATION

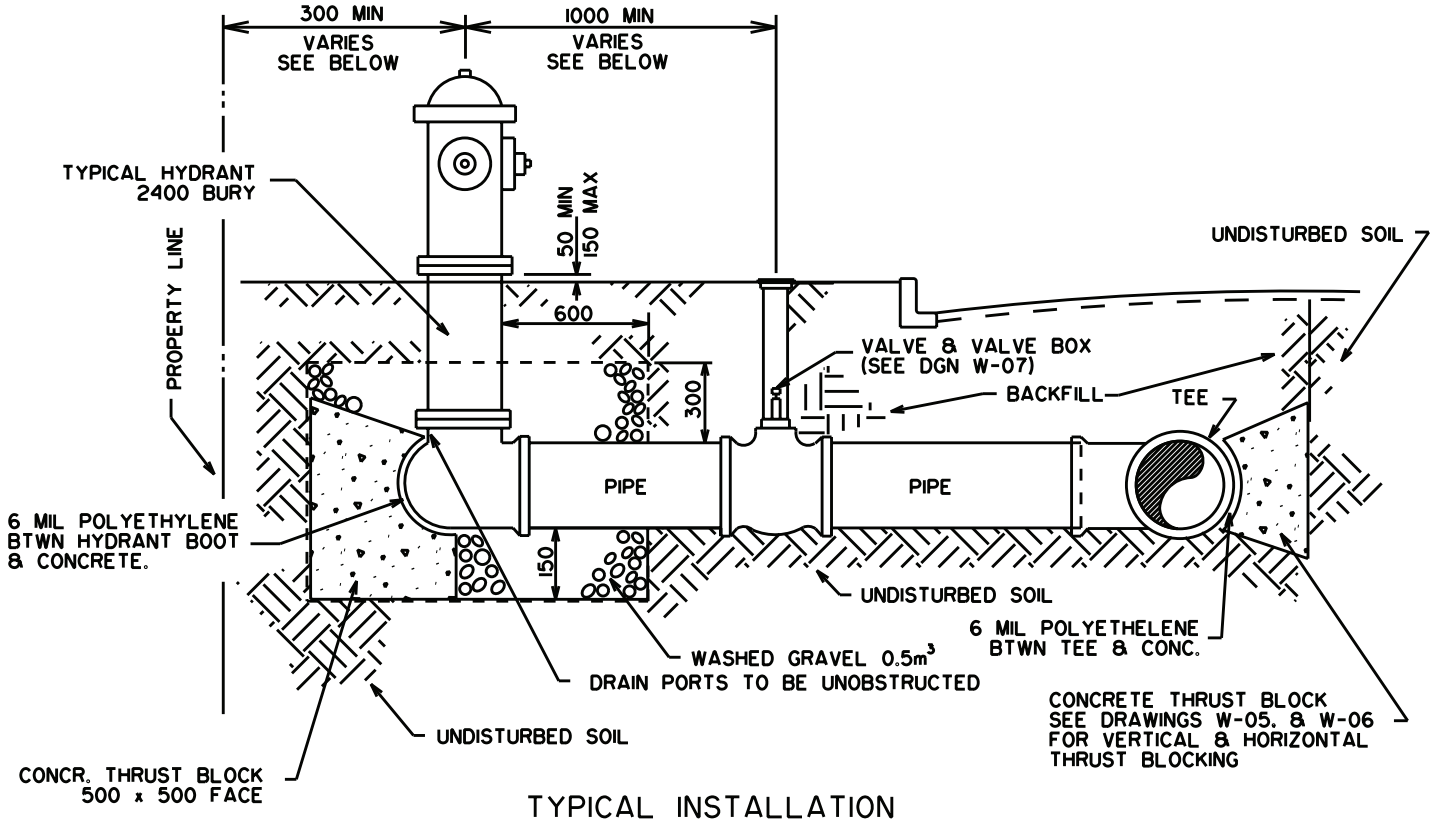

TYPICAL INSTALLATION

- THRUST BLOCKS SHALL BE OF CONCRETE OBTAINING A COMPRESSIVE STRENGTH. OF AT LEAST 30 MPa @ 28 DAYS. CEMENT TO BE TYPE 50 (SULPHATE RESISTANT).
- TO OBTAIN DISTANCE FROM PROPERTY LINE TO HYDRANT AND VALVE. SEE CITY OF LETHBRIDGE ROAD R.O.W. - LINE ASSIGNMENT CORRESPONDING TO R.O.W. WIDTH.
- ALL DIMENSIONS ARE IN MILLIMETERS.

REVISED	CITY OF Lethbridge INFRASTRUCTURE SERVICES	DRAWN P.R.A.
07/01/10		CHECKED
		APPROVED
		SCALE N.T.S.
	STANDARD FOR FIRE HYDRANT INSTALLATION	DATE 97/03/11
		DWG NO W-01

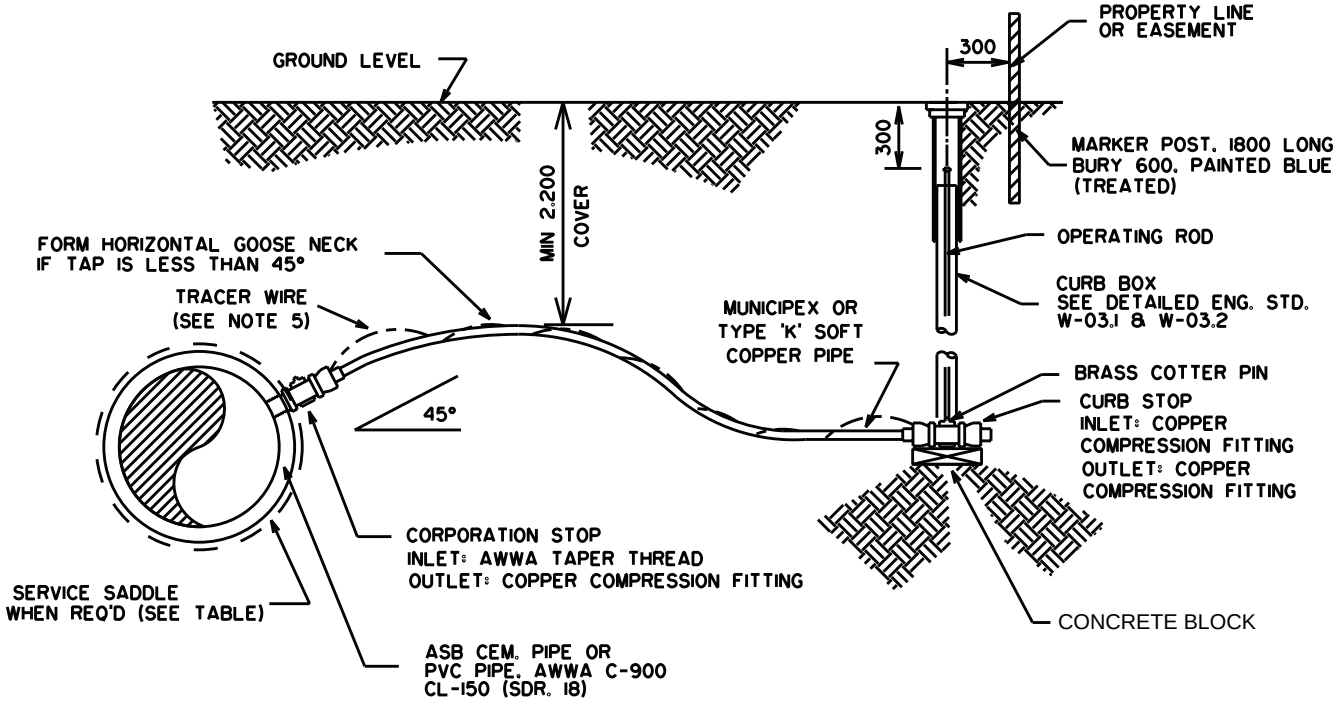

	MAX SIZE OF OUTLET ALLOWED WITH CL 150 AC PIPE		MAX SIZE OF OUTLET WITH PVC PIPE CL 150 (SDR.18)	
PIPE SIZE	CORPORATION STOP ONLY	CORP STOP WITH SERVICE SADDLE	CORPORATION STOP ONLY	CORP STOP WITH SERVICE SADDLE
100	-	25	20	50
150	-	37	25	50
200	-	50	25	50
250	-	50	25	50
300	-	50	25	50
350	-	50	25	50
400	-	50	25	50

NOTES:

1. CORPORATION STOPS TO BE STAGGERED AND AT LEAST 400 mm APART.
2. CORPORATION STOPS TO BE 300 mm MIN. FROM END OF PIPE SECTION.
3. USE AWWA THREAD FOR ALL DIRECT TAPS & SERVICE SADDLE CONNECTIONS
4. FOR CONNECTIONS IN EXISTING AREAS. HORIZONTAL GOOSENECK TO BE FORMED IF DEPTH IS LESS THAN 1500 mm
5. TRACER WIRE SHALL BE INSTALLED IN CUL-DE-SACS AND WHERE SPECIFIED BY THE CITY ENGINEER.

REVISED		
DEC 15. 2005	CITY OF Lethbridge INFRASTRUCTURE SERVICES	DRAWN P.R.A.
		CHECKED
		APPROVED
		SCALE N.T.S.
	STANDARD FOR 20mm & 25mm WATER SERVICE	DATE 97/03/11
		DWG NO W-02

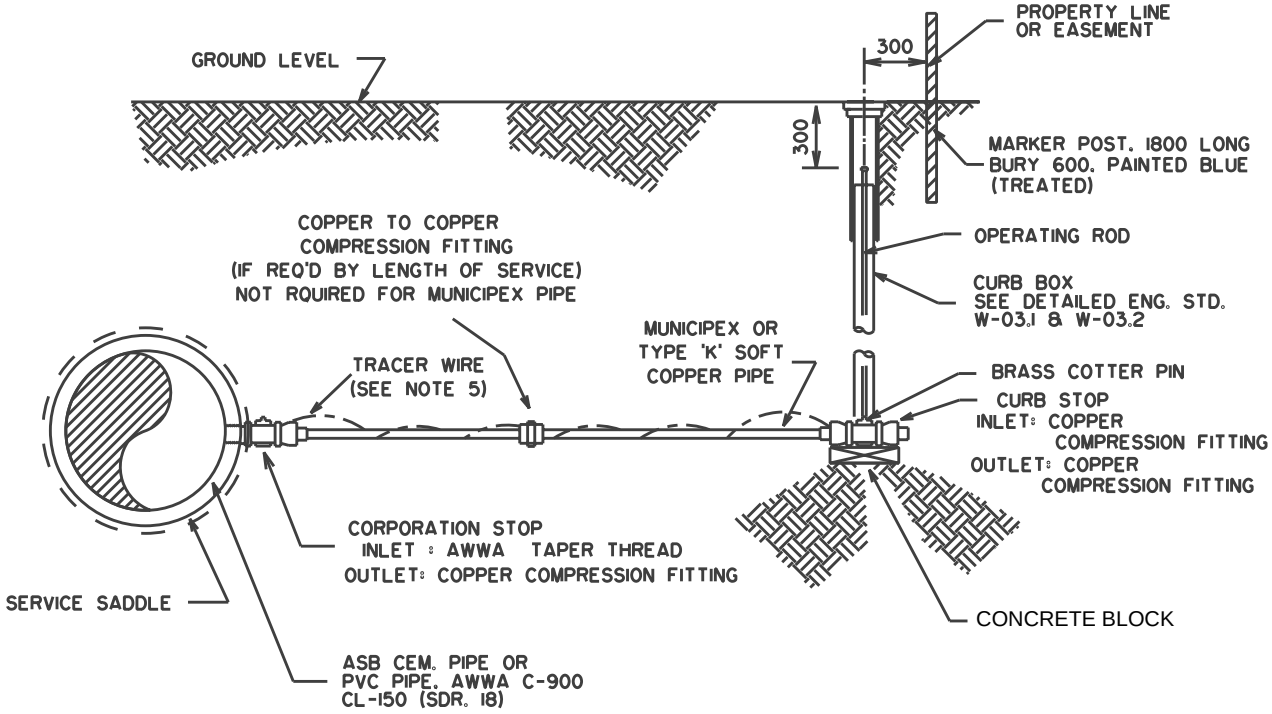

	MAX SIZE OF OUTLET ALLOWED WITH CL 150 AC PIPE		MAX SIZE OF OUTLET WITH PVC PIPE CL 150 (SDR.18)	
PIPE SIZE	CORPORATION STOP ONLY	CORP STOP WITH SERVICE SADDLE	CORPORATION STOP ONLY	CORP STOP WITH SERVICE SADDLE
100	—	25	—	50
150	—	37	—	50
200	—	50	—	50
250	—	50	—	50
300	—	50	—	50
350	—	50		
400	—	50		

NOTES:

1. SERVICE SADDLE TO BE BRONZE BODY. AWWA THREAD. C/W DOUBLE STAINLESS STEEL STRAP FOR PIPE > 100mm ø & SINGLE 50mm WIDE FOR STAINLESS STEEL STRAP FOR PIPE 100 mm ø
2. CORPORATION STOPS TO BE STAGGERED AND AT LEAST 400 mm APART.
3. CORPORATION STOPS TO BE 300 mm MIN. FROM END OF PIPE SECTION.
4. USE AWWA THREAD FOR ALL DIRECT TAPS
5. TRACER WIRE SHALL BE INSTALLED IN CUL-DE-SACS AND WHERE SPECIFIED BY THE CITY ENGINEER.

REVISED	CITY OF Lethbridge INFRASTRUCTURE SERVICES	DRAWN P.R.A.
		CHECKED
		APPROVED
		SCALE N.T.S.
	STANDARD FOR 37mm & 50mm WATER SERVICE	DATE 97/03/08
		DWG NO W_03

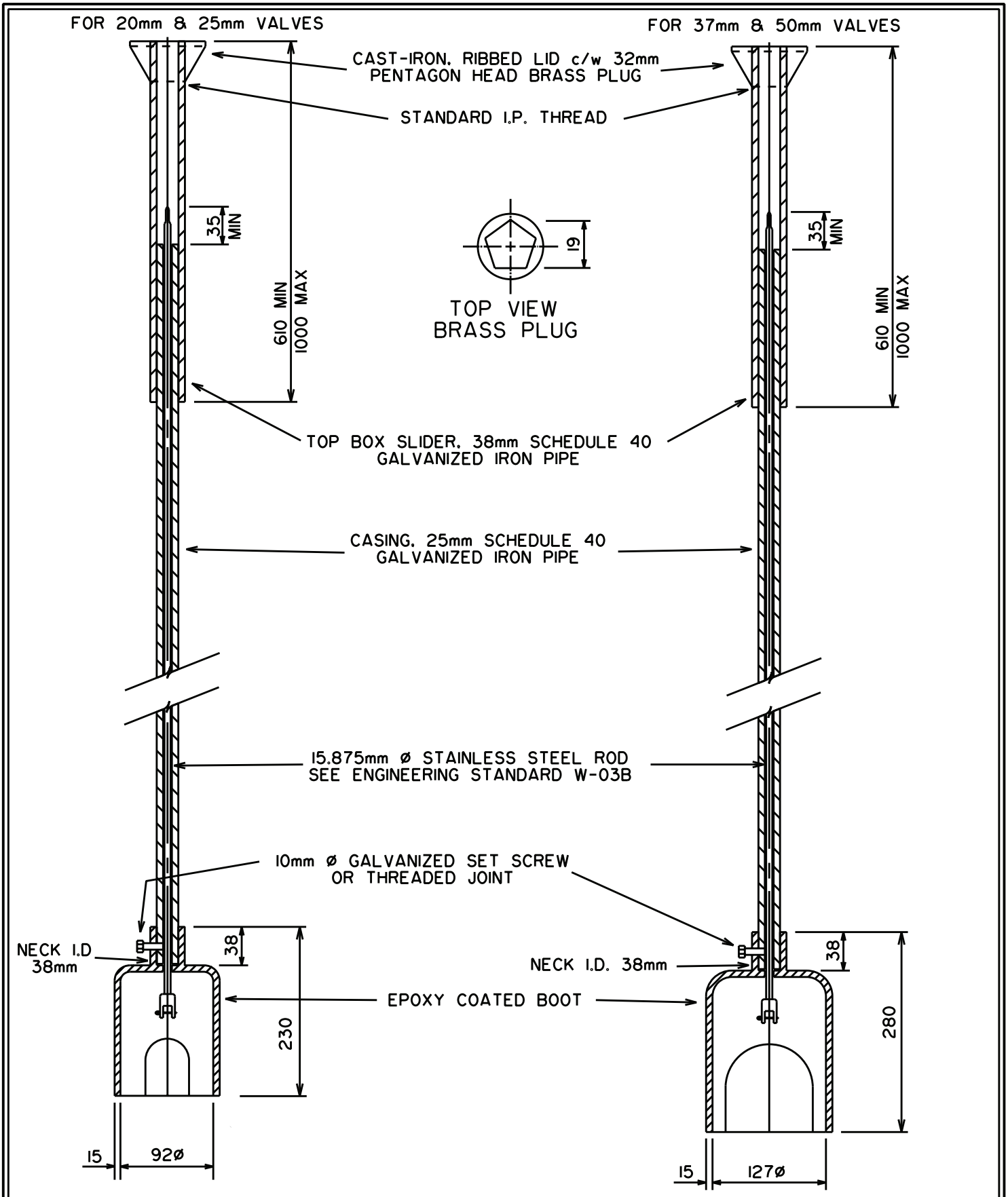

REVISED		
	CITY OF Lethbridge INFRASTRUCTURE SERVICES	DRAWN
		CHECKED
		APPROVED
		SCALE N.T.S.
	CURB STAND DETAIL (SERVICE BOX)	DATE 97/02/28
		DWG NO W-03A

COTTER PIN SPECIFICATIONS					
NOMINAL DIAMETER	DIAMETER A		OUTSIDE EYE DIAMETER B (MIN)	HOLE SIZE RECM'D	LENGTH L
	MAX	MIN			
6.35mm	5.7mm	5.6mm	12.7mm	6.7mm	55mm

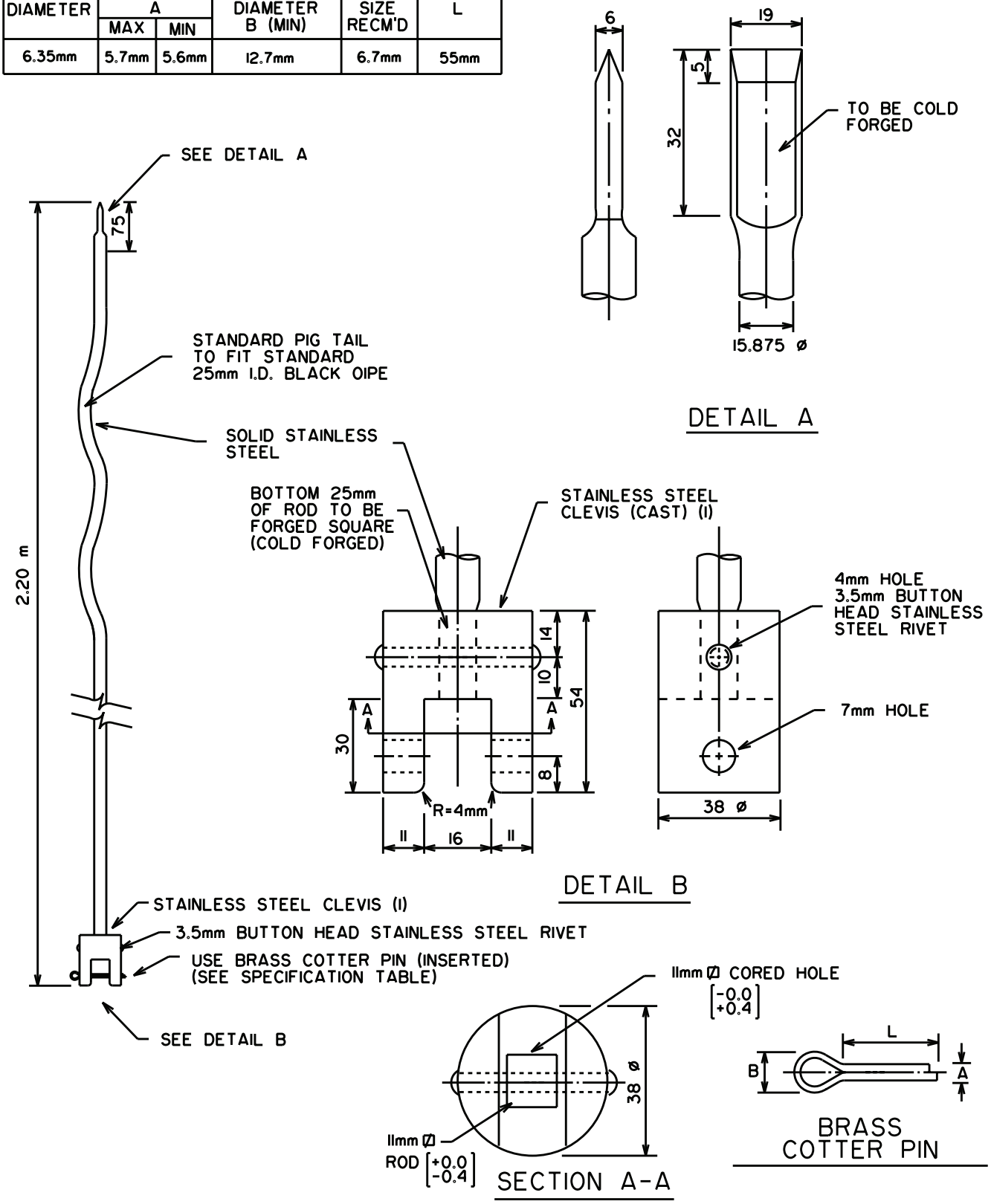

REVISED		
JAN 27, 2005 - (1)	CITY OF Lethbridge INFRASTRUCTURE SERVICES	DRAWN P.R.A.
		CHECKED
		APPROVED
		SCALE N.T.S.
	CURB STAND OPERATING ROD DETAIL	DATE 97/02/07
		DWG NO W-03B

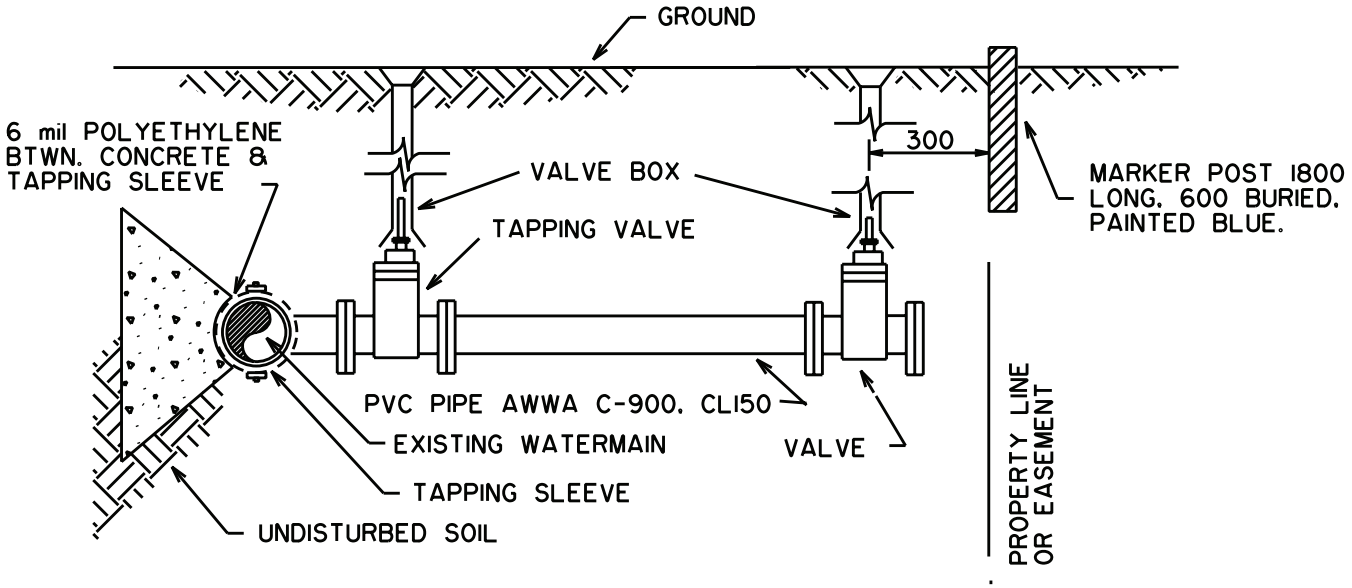

FOR MAIN UNDER PRESSURE

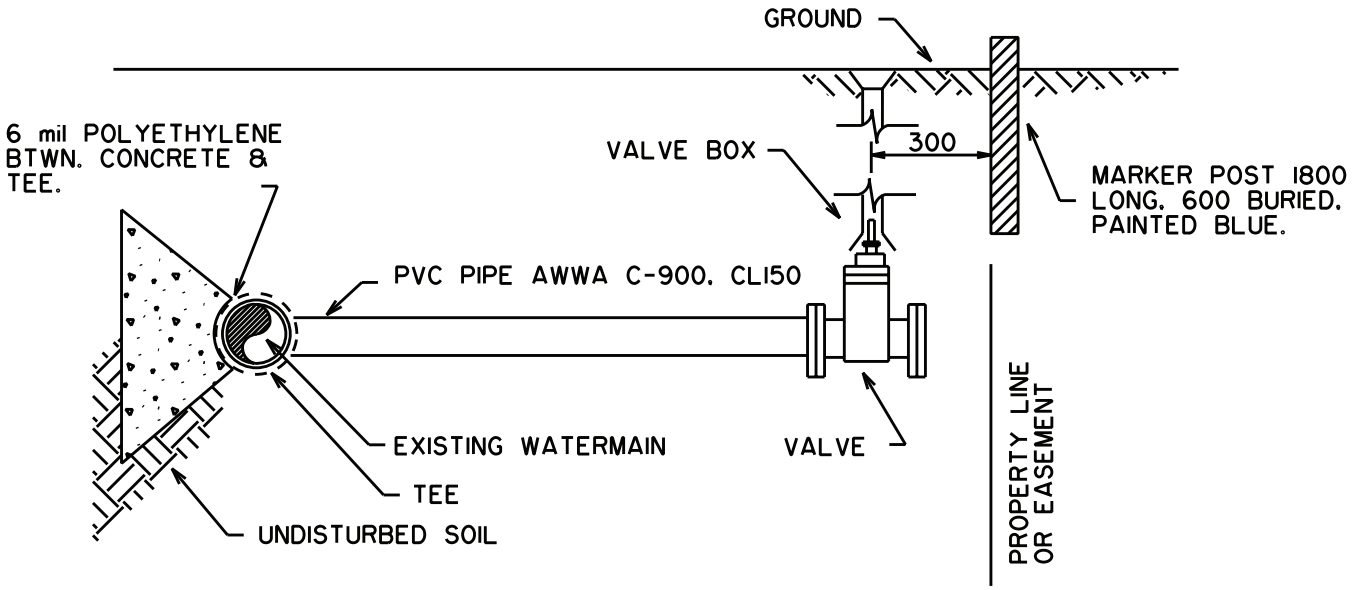

AT TIME OF CONSTRUCTION

NOTE: - ALL DIMENSIONS IN MILLIMETERS.

- THRUST BLOCKS TO BE AS PER "STANDARD FOR HORIZONTAL THRUST BLOCKING" DRAWING W-05.

REVISED	CITY OF Lethbridge INFRASTRUCTURE SERVICES	DRAWN P.R.A.
		CHECKED
		APPROVED
		SCALE N.T.S.
	STANDARD WATER SERVICE CONNECTIONS FOR 150mm & 200mm	DATE 97/02/19
		DWG NO W_04

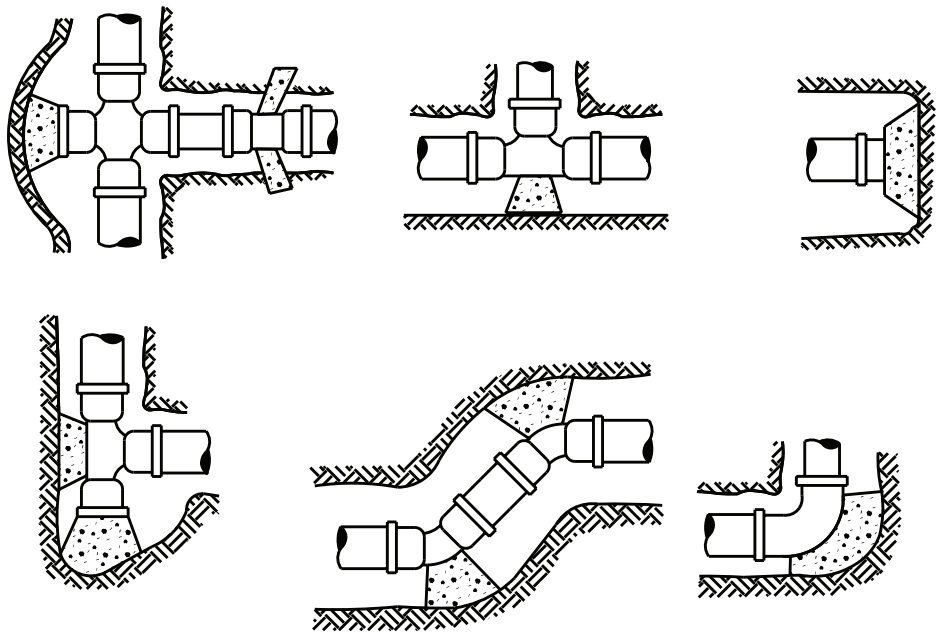

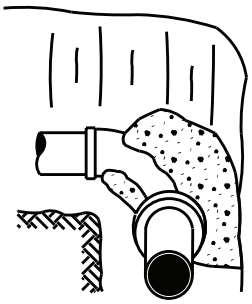

FOR SMALL PIPE

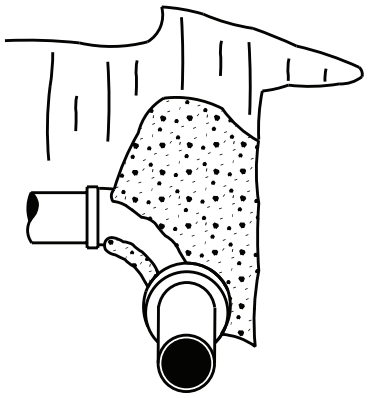

FOR LARGE PIPE

LOCATION OF HORIZONTAL THRUST BLOCKS

TABLE "A"					
THRUST BLOCK FACE AREA IN SQ. METRES AT FITTING FOR CL150 PIPE @ 1000kPa & SOIL BEARING CAPACITY OF 100 kPa					
PIPE SIZE	DEAD ENDS & TEES	90° BEND	45° BEND	22 1/2° BEND	11 1/4° BEND
100	0.12	0.17	0.10	0.10	0.10
150	0.25	0.35	0.19	0.10	0.10
200	0.43	0.60	0.33	0.17	0.10
250	0.70	0.99	0.54	0.27	0.14
300	1.00	1.40	0.75	0.39	0.19
350	1.35	1.90	1.03	0.52	0.26
400	1.75	2.47	1.34	0.68	0.34
450	2.24	3.15	1.72	0.87	0.44
500	2.77	3.90	2.12	1.07	0.54
600	4.00	5.64	3.07	1.55	0.78
750	6.26	8.83	4.81	2.44	1.22
900	9.03	12.70	7.58	3.51	1.76

TABLE "B"	
SOIL TYPE	SAFE BEARING LOAD - kPa
SOFT CLAY: LOOSE SAND	50
MED. SOFT CLAY: DENSE SAND	100
DENSE CLAY TILL & GRAVEL	150
HARD SHALE	500

NOTE: - CONCRETE THRUST BLOCKS ARE TO BE PLACED AT ALL TEES, BENDS, PLUGS, CAPS, PIPE DEFLECTIONS AND REDUCERS.

- CONCRETE THRUST BLOCKS SHALL EXTEND INTO UNDISTURBED SOIL. THRUST BLOCKS IN SOFT UNSTABLE SOILS WILL REQUIRE REMOVAL OF SOIL & REPLACEMENT WITH COMPACTABLE FILL OF SUFFICIENT STABILITY TO RESIST THRUST TO THE SATISFACTION OF THE ENGINEER.

- THRUST BLOCKS SHALL BE OF CONCRETE OBTAINING A COMPRESSIVE STRENGTH OF AT LEAST 30 MPa @ 28 DAYS. CEMENT TO BE TYPE 50 (SULPHATE RESISTANT).

- CONCRETE SHALL BE KEPT CLEAR OF BELLS AND SHALL NOT CONTACT THE PIPE. USE A MINIMUM OF 6 mil POLYETHYLENE BETWEEN CONCRETE AND ALL FITTING SURFACES.

- ALL THRUST BLOCKS SHALL HAVE A MINIMUM FACE OF 0.10 m2

- REDUCERS SHALL HAVE A TOTAL BEARING AREA EQUAL TO THAT OF AN 11 1/4° BEND BASED UPON THE LARGEST DIAMETER OF THE REDUCER.

REVISED		
	CITY OF Lethbridge INFRASTRUCTURE SERVICES	DRAWN P.R.A.
		CHECKED
		APPROVED
		SCALE N.T.S.
	HORIZONTAL THRUST BLOCKING	DATE 97/02/12
		DWG NO W-05

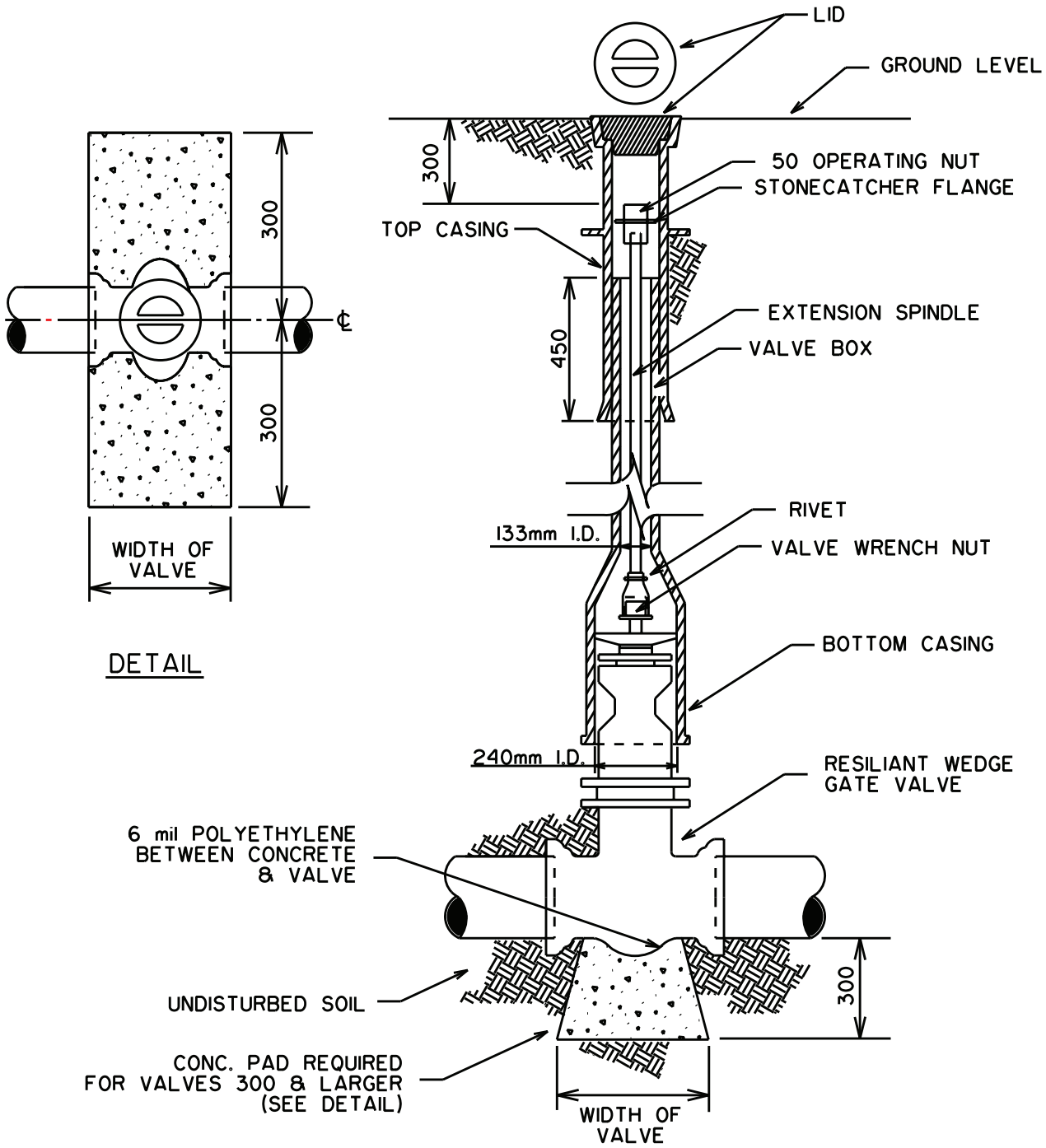

NOTE:
- ALL DIMENSIONS ARE IN MILLIMETERS
- ALL VALVES LEFT TURN TO OPEN (COUNTER-CLOCKWISE) FOR MAIN SIZES 150mm TO 300mm
- CONCRETE SHALL OBTAIN A MINIMUM COMPRESSIVE STRENGTH OF 30 MPa @ 28 DAYS. ALL CEMENT TO BE TYPE 50 (SULPHATE RESISTANT).

REVISED	CITY OF Lethbridge INFRASTRUCTURE SERVICES	DRAWN P.R.A.
		CHECKED
		APPROVED
		SCALE N.T.S.
	STANDARD GATE VALVE INSTALLATION	DATE 95/05/11
		DWG NO W-07

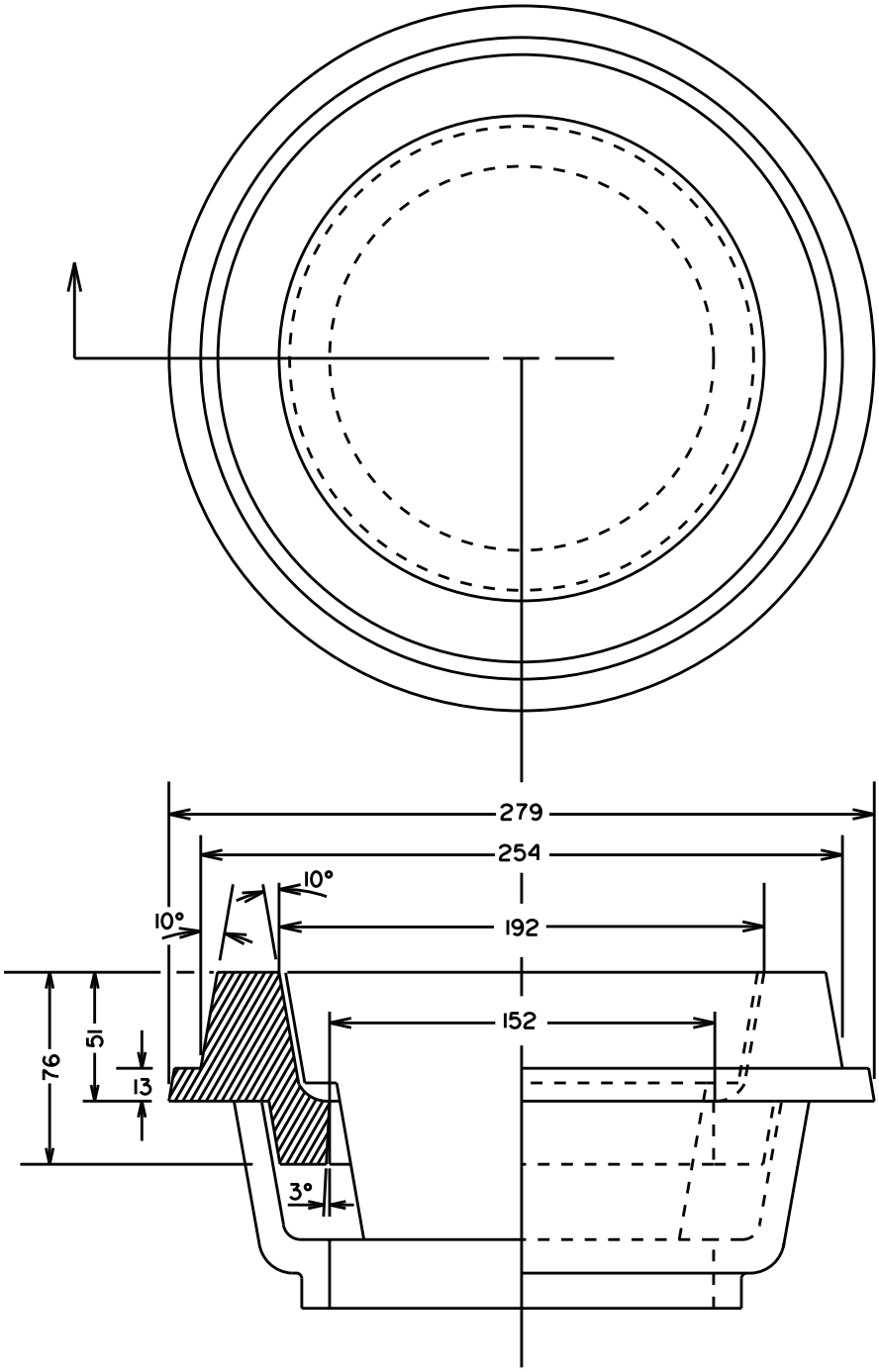

NOTE: ALL DIMENSIONS IN MILLIMETERS

REVISED	CITY OF Lethbridge INFRASTRUCTURE SERVICES	DRAWN P.R.A.
		CHECKED
		APPROVED
		SCALE N.T.S.
	VALVE RISER BOX	DATE 97/02/10
		DWG NO W-12

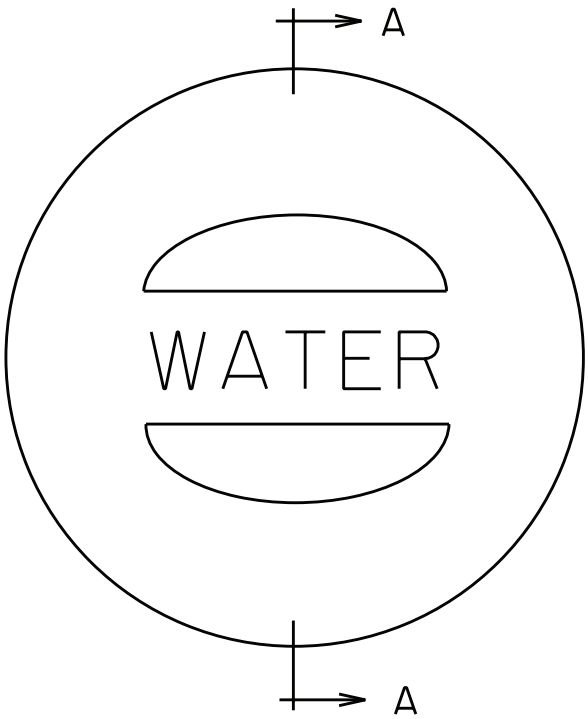

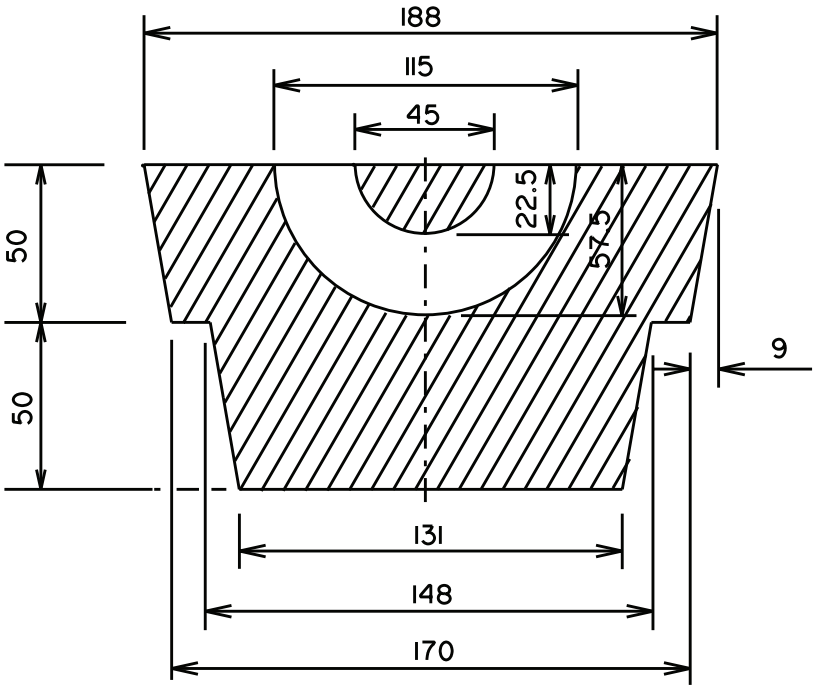

SECTION A-A

NOTE: ALL DIMENSIONS IN MILLIMETERS

REVISED			
	CITY OF Lethbridge INFRASTRUCTURE SERVICES	DRAWN	D.F.
		CHECKED	
		APPROVED	
		SCALE	N.T.S.
	VALVE BOX CAP	DATE	06/12/08
		DWG NO	W-12A

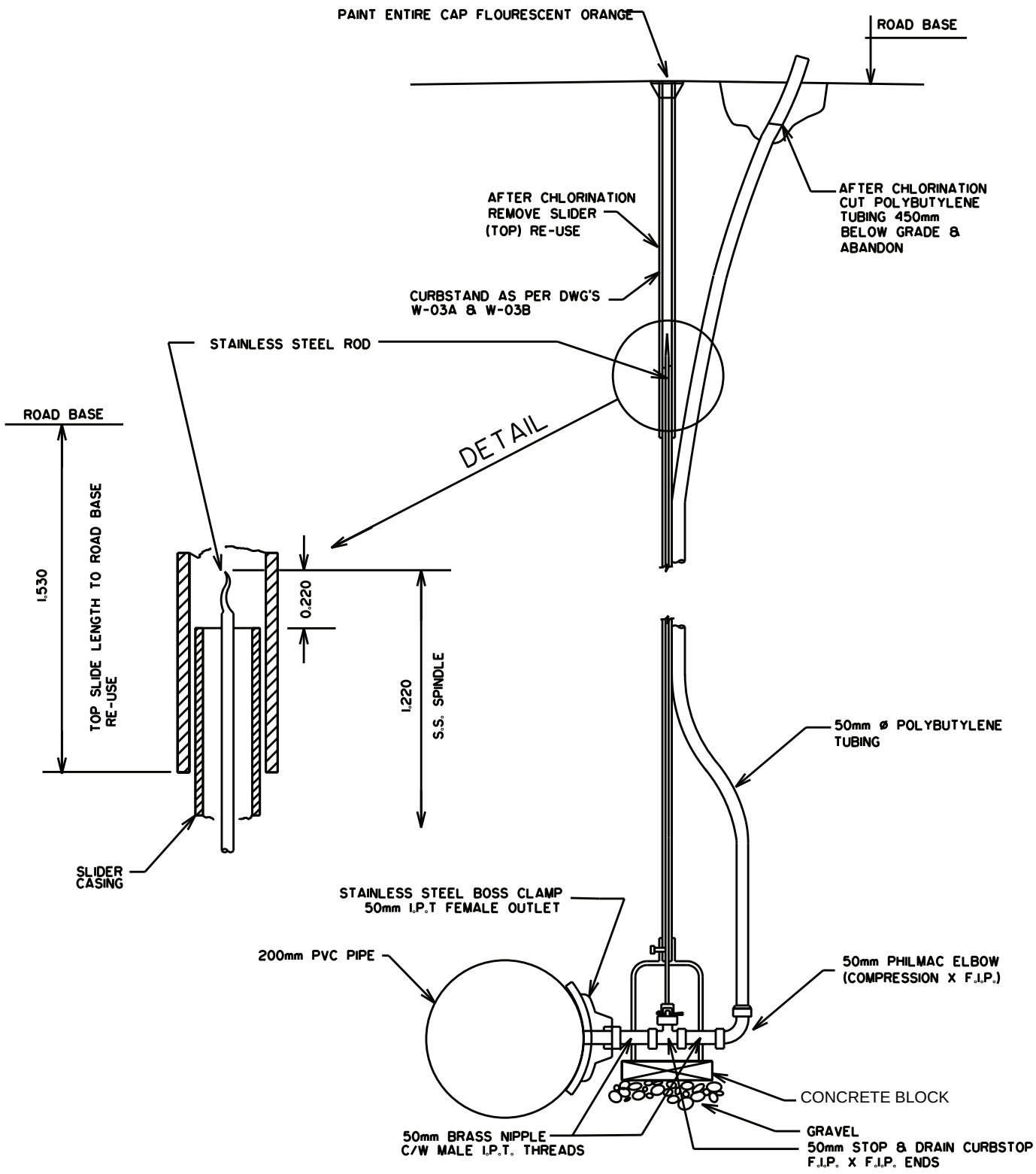

CHLORINATION SYSTEM

REVISED	CITY OF Lethbridge INFRASTRUCTURE SERVICES	DRAWN L.M.C
		CHECKED
		APPROVED
		SCALE N.T.S.
	FOR CHLORINATING & FLUSHING WATERMAINS	DATE 97/02/01
		DWG NO W-13