GENERAL NOTES AND DETAILS

D01) GENERAL

D01-1 GENERAL INFORMATION

1. THE INFORMATION PRESENTED ON THESE DRAWINGS HAS BEEN DESIGNED AND ANALYZED IN ACCORDANCE WITH THE 2012 ONTARIO BUILDING CODE & 2010 NATIONAL BUILDING CODE OF CANADA. CONSTRUCTION IS TO BE PERFORMED IN ACCORDANCE WITH THIS AND ALL OTHER APPLICABLE CODES.

   ☐ 1.1 CONCRETE STRUCTURE DESIGNED IN ACCORDANCE WITH CSA A23.3–14

   ☐ 1.2 STEEL STRUCTURE DESIGNED IN ACCORDANCE WITH CAN/CSA–S16–14

   ☐ 1.3 MASONRY STRUCTURE DESIGNED IN ACCORDANCE WITH CAN/CSA S304–14

2. CONTRACTOR IS TO VERIFY/COORDINATE ALL DIMENSIONS/PENETRATIONS WITH ARCHITECTURAL/MECHANICAL/ELECTRICAL DRAWINGS PRIOR TO CONSTRUCTION. REPORT INCONSISTENCIES BEFORE PROCEEDING WITH WORK. ANY OPENINGS NOT INDICATED ON STRUCTURAL DRAWINGS ARE TO BE APPROVED BY DEPARTMENTAL REPRESENTATIVE IN WRITING PRIOR TO CONSTRUCTION.

3. CADD VERSIONS OF THE STRUCTURAL DRAWINGS SHALL BE MADE AVAILABLE TO THE CONTRACTOR UPON THE COMPLETION OF A RELEASE FORM INDEMNIFYING THE CONSULTANT FROM ANY ERRORS OR OMISSIONS ASSOCIATED WITH THE CADD FILES.

4. DEMOLITION DETAILS THAT AFFECT THE STRUCTURAL ELEMENTS HAVE BEEN REVIEWED IN ACCORDANCE WITH PARTS 2,4,10 AND 11 OF THE 2012 ONTARIO BUILDING CODE. WHERE REQUIRED, SUPPLEMENTARY/TEMPORARY/REMEDIAL FRAMING HAS BEEN PROVIDED.

5. SEISMIC RESTRAINT OF ARCH/MECH/ELECT ELEMENTS NOT NOTED ON THE DRAWINGS ARE THE RESPONSIBILITY OF THE CONTRACTOR'S ENGINEER. RESTRAINT DETAILS ARE TO BE DEVELOPED IN ACCORDANCE WITH THE 2012 OBC/2010 NBC. CONTRACTOR'S ENGINEER IS RESPONSIBLE FOR THE DESIGN AND DETAILING OF SEISMIC RESTRAINTS AND ISOLATIONS AS REQUIRED BY SPECIFICATIONS INCLUDING THE VERIFICATION THAT THE EXISTING/NEW STRUCTURE IS CAPABLE OF SAFELY SUPPORTING THE IMPOSED LOADS IN ACCORDANCE WITH THE 2012 OBC/2010 NBC. NO ELEMENTS MAY BE CONSTRUCTED WITHOUT WRITTEN CONFIRMATION OF THESE CONDITIONS BY CONTRACTOR'S ENGINEER.

6. NO FOUNDATION ELEMENTS ARE TO BE CONSTRUCTED UNTIL WRITTEN APPROVAL OF THE BEARING SURFACES AND PRESSURES IS PROVIDED BY A GEOTECHNICAL ENGINEER THROUGH ON–SITE INVESTIGATION. FAILURE TO COMPLETE THIS WORK COULD RESULT IN THE REMOVAL/REINSTATEMENT OF ANY/ALL FOUNDATION ELEMENTS AT CONTRACTOR'S OWN COST.

7. CONTRACTOR TO PROVIDE PRE–ENGINEERED SHORING AS REQUIRED TO ACCOMMODATE THE CONTRACTOR'S CONSTRUCTION ACTIVITIES AND TO PREVENT DAMAGE TO ANY ADJACENT PROPERTY. ALL CONSTRUCTION ACTIVITIES TO BE LIMITED TO THE LIMITS OF THE CONSTRUCTION SITE AND ALL DAMAGE TO EXISTING PROPERTIES MUST BE REINSTATED.

D01-2 SHOP DRAWINGS

1. SUBMIT SHOP DRAWINGS FOR ALL STRUCTURAL WORK AND ANY WORK AFFECTING THE STRUCTURE TO THE CONSTRUCTION MANAGER. OBTAIN DEPARTMENTAL REPRESENTATIVE APPROVAL BEFORE PROCEEDING WITH THE FABRICATION.

2. EACH OF THE FOLLOWING SHOP DRAWINGS MUST BEAR THE SIGNATURE AND STAMP OF A QUALIFIED PROFESSIONAL ENGINEER REGISTERED IN THE PROVINCE (PLUS OTHER DRAWINGS AS NOTED).

   a) DRAWINGS FOR ANY TEMPORARY WORK.
   b) DRAWINGS FOR ANY STRUCTURAL PARTS DESIGNED BY THE CONTRACTOR'S FORCES INCLUDING EXTERIOR BUILDING ENVELOPE.
   c) STRUCTURAL STEEL/JOISTS.
   d) FORMWORK
   e) CONCRETE REINFORCING

3. SHOP DRAWINGS MUST BE REVIEWED AND STAMPED REVIEWED BY THE CONTRACTOR BEFORE ISSUING TO THE DEPARTMENTAL REPRESENTATIVE. SHOP DRAWINGS NOT STAMPED BY THE CONTRACTOR WILL BE REJECTED. ANY DELAYS IN THE CONSTRUCTION SCHEDULE DUE TO NONCOMPLIANCE WITH THIS REQUIREMENT SHALL BE THE RESPONSIBILITY OF THE CONTRACTOR.

4. SHOP DRAWINGS ARE REVIEWED FOR CONFORMANCE WITH THE GENERAL DESIGN CONCEPT. THIS REVIEW DOES NOT IMPLY APPROVAL OF THE DETAILED DESIGN OR QUANTITIES DESCRIBED IN THE SHOP DRAWINGS. THE RESPONSIBILITY FOR THE QUANTITIES AND DETAILED DESIGN OF THE MATERIALS AND COMPONENTS AS REQUIRED TO PROVIDE THE COMPLETE AND SATISFACTORY JOB DESCRIBED IN THE DESIGN DOCUMENTS REMAINS WITH THE CONTRACTOR.

D02) CONCRETE

D02-1 CONCRETE COVER (CLEAR TO REINFORCING):

U/S FOOTINGS, PILE CAPS, GRADE BEAMS (AGAINST SOIL)	75mm
FOOTINGS, PILE CAPS, GRADE BEAMS (SIDES & TOP)	50mm
WALLS	40mm
SLABS	25mm U/N
BEAMS	40mm (TO STIRRUPS)
COLUMNS	40mm (TO TIES)

D02-2 CONCRETE MIXES

PROPORTION NORMAL DENSITY CONCRETE IN ACCORDANCE WITH CAN/CSA–A23.1, TO GIVE THE FOLLOWING QUALITY FOR ALL CONCRETE AS INDICATED.

LOCATION	28 DAY STRENGTH	SLUMP	CLASS OF EXPOSURE
SLAB ON GRADE (INTERIOR)	25 MPa	75mm	N
FOUNDATIONS WALLS/PIERS	25 MPa	75mm	F–2

*OBTAIN THESE SLUMPS WITH AID OF SPECIFIED WATER REDUCING AGENT.
*NOTE: ALL CONCRETE EXPOSED TO EXTERIOR CONDITIONS TO HAVE MINIMUM 6% AIR ENTRAINMENT.

READY–MIXED CONCRETE AND CONCRETE PROPORTIONS SHALL BE IN ACCORDANCE WITH CSA A23.1, CLAUSE 12 AND AS FOLLOWS:

1. MINIMUM ALLOWABLE COMPRESSIVE STRENGTH SHALL BE 30 MPa(4400psi) AT 28 DAYS OF AGE, UNLESS OTHERWISE NOTED OR SHOWN.
2. IF BLENDED NORMAL PORTLAND CEMENT/CEMENTITIOUS HYDRAULIC SLAG IS USED EXCEPT FOR FLOOR MIXES, SLAG CONTENT SHALL NOT BE MORE THAN 25% OF TOTAL MASS OF CEMENT. TOTAL VOLUME OF CEMENT IN CONCRETE FLOOR MIXES SHALL BE 100% NORMAL PORTLAND CEMENT.
3. PROVIDE CERTIFICATION THAT MIX PROPORTIONS SELECTED WILL PRODUCE CONCRETE OF SPECIFIED QUALITY AND YIELD AND THAT STRENGTH WILL COMPLY WITH CAN/CSA–A23.1–M06.
4. USE OF CALCIUM CHLORIDE NOT PERMITTED.
5. DO NOT CHANGE CONCRETE MIX WITHOUT PRIOR APPROVAL OF CONSULTANT. SHOULD CHANGE IN MATERIAL SOURCE BE PROPOSED, NEW MIX DESIGN TO BE APPROVED BY CONSULTANT.

D02-3 SLAB INFILL DETAILS

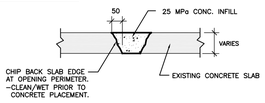

TYPICAL SLAB INFILL: OPENING < 300x300

D02-4 SLAB ON GRADE REMOVALS/REINSTATEMENT

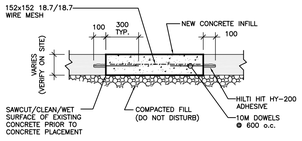

D02-5 POST INSTALLED CONCRETE ANCHORS

1. 12.7mm# EXPANSION ANCHORS TO HAVE MINIMUM ALLOWABLE CAPACITY OF 10.7kN IN SHEAR, AND 10.5kN IN TENSION.
2. ADHESIVE ANCHORING SYSTEM TO BE AN INJECTABLE TWO–COMPONENT HYBRID ADHESIVE CAPABLE OF RESISTING SEISMIC TENSIONS AND SHEAR LOADS.
3. 16mm# THREADED RODS ARE TO BE SPECIALTY RODS DESIGNED TO BE USED WITH ADHESIVE ANCHORING SYSTEM WITH MINIMUM FACTORED RESISTANCE OF 23.0kN IN SHEAR, AND 56.4kN IN TENSIONS BEFORE APPLYING 0.65 SEISMIC FACTOR
4. SUBMIT PRODUCT INFORMATION SHEET WITH TECHNICAL DATA FOR EXPANSION ANCHORS, ADHESIVE, AND THREADED RODS FOR APPROVAL BY DEPARTMENTAL REPRESENTATIVE.

D03) MASONRY

D03-1 GENERAL:

1. ALL MASONRY WORK SHALL COMPLY WITH CAN3–S304.1–06, CAN3–A370–M84 AND A371–M84 UNLESS OTHERWISE NOTED.
2. MINIMUM MASONRY REINFORCEMENT (UNLESS OTHERWISE NOTED):

WALL THICKNESS	LOAD BEARING	NON-LOADBEARING
140mm	HORIZ. 5MR @ 200 OR HDMR @ 400 VERT. 1–15M @ 800	5MR @ 400 1–10M @ 1200
190mm	HORIZ. HDMR @ 200 & 400 (ALTERNATE) VERT. 1–20M @ 1200	HDMR @ 600 1–15M @ 1200
240mm	HORIZ. HDMR @ 200 VERT. 2–15M @ 1200	HDMR @ 400 2–10M @ 1200
290mm	HORIZ. HDMR @ 200 VERT. 2–20M @ 1200	HDMR @ 400 2–15M @ 1200

3. VERTICAL BARS SHALL BE CONTINUOUS, LAPPED ONLY AT FLOORS, DOWELED INTO SUPPORTS AND GROUTED INTO CLEAR VERTICAL BLOCK CORES SEALED ALL AROUND WITH MORTAR, PROVIDE CLEAN–OUT PORT AT BOTTOM OF EACH GROUTED CORE. DO NOT CLOSE PORT OR PLACE GROUT UNTIL CORE AND STEEL HAVE BEEN INSPECTED. PROVIDE THREE GROUTED REINFORCED (20M) CORES AT EACH CORNER AND INTERSECTION (MIN.).
4. COMPRESSIVE STRENGTH OF MATERIALS USED FOR LOAD BEARING AND PANEL WALLS SHALL BE IN EXCESS OF THE FOLLOWING VALUES:
   a) MASONRY UNITS – HOLLOW CONCRETE BLOCK 15 MPa (2200 psi)
   – SOLID CONCRETE BLOCK (GROSS AREA) 15 MPa (2200 psi)
7. TYPE "S" MORTAR SHALL BE USED FOR MASONRY BELOW GRADE, MIN. STRENGTH fm = 12.4 MPa. (1800 psi)
   TYPE "N" MORTAR SHALL BE USED ABOVE GRADE, MIN. STRENGTH fm = 5.2 MPa. (800 psi)
8. GROUT TO BE A MINIMUM OF 15 MPa (2900 psi) MIN. SLUMP OF 200mm (8").
9. MORTAR FOR EXPOSED MASONRY SHALL BE AIR ENTRAINED.
10. PROVIDE LINTELS FOR ALL OPENINGS AND/OR RECESSES IN MASONRY WALLS SHOWN ON THE ARCHITECTURAL OR STRUCTURAL DRAWINGS INCLUDING THOSE FOR MECHANICAL OR ELECTRICAL SERVICES OR EQUIPMENT. (SEE LINTEL SCHEDULE)
11. INTERSECTING OR ABUTTING WALLS SHALL BE BONDED ADEQUATELY TOGETHER.
12. PROVIDE MINIMUM 25mm(1") GROUT UNDER ALL WALL PLATES AND BASE PLATES.

D04) STEEL

D04-1 STRUCTURAL STEEL:

STRUCTURAL STEEL SHALL COMPLY WITH CAN3–S16.1–01(06) UNLESS OTHERWISE NOTED.

ITEM	APPLICABLE SPECIFICATION (UNLESS OTHERWISE NOTED)
ROLLED SECTIONS	G40.21M – 350W
HSS (TUBE) SECTIONS	G40.21M – 350W (CLASS C)
CONNECTION BOLTS	A325 (BEARING TYPE)
ANCHOR BOLTS	A307 (UNLESS OTHERWISE NOTED IN BASEPLATE SCHEDULE)
BRACE FRAME/BEARING PLATES	G40.21M–300W

1. ALL STEEL WORK SHALL BE GIVEN ONE COAT OF APPROVED PRIMER.
2. FIELD AND SHOP CONNECTIONS SHALL BE WELDED OR HIGH TENSILE BOLTED (ASTM STANDARD A325).
3. WELDING SHALL CONFORM TO LATEST CSA SPECIFICATION W59 AND BE UNDERTAKEN BY A FABRICATOR APPROVED BY THE CANADIAN WELDING BUREAU TO THE REQUIREMENTS OF CSA SPECIFICATION W47.1.
4. ALL EXPOSED WELDS SHALL BE CONTINUOUS AND BE GROUND SMOOTH.
5. ALL STRUCTURAL STEEL SHALL BE PAINTED WITH APPROVED RUST INHIBITIVE PAINT.
6. STRUCTURAL STEEL MEMBERS SHALL NOT BE SPLICED UNLESS APPROVED BY THE DEPARTMENTAL REPRESENTATIVE IN WRITING.
7. WHERE STRUCTURAL STEEL MEMBERS SPECIFIED ON THE STRUCTURAL DRAWINGS ARE UNAVAILABLE TO THE CONTRACTOR, THE STRUCTURAL STEEL CONTRACTOR SHALL PROVIDE MEMBERS HAVING ALL SECTION PROPERTIES EQUAL TO OR BETTER THAN THAT OF THE SPECIFIED MEMBERS AT NO ADDITIONAL COST. CONTACT DEPARTMENTAL REPRESENTATIVE FOR ACCEPTANCE OF ANY AND ALL SUBSTITUTIONS.
8. DESIGN FORCES FOR AXIAL MEMBERS SHOWN ON DRAWINGS HAVE BEEN AMPLIFIED BY Rd = 1.5 AS PER CAN/CSA–S16–14

D05-1 GRAVITY LOADS:

SLS/ULS VALUES:

SNOW: Is: ULS=1.0 SLS=0.9
WIND: Iw: ULS=1.0 SLS=0.75
SEISMIC: Ie: ULS=1.0

SNOW LOAD FACTORS:

S = Is [Ss(Cb*Cw*Cs*Ca) + Sr]
Ss = 2.1 KPa
Sr = 0.4 KPa
Cb = 0.8
Cw = 1.0
Cs = 1.0 (0.09 AT SLOPED ENDS)

ROOF:

DEAD: 3.60 KPa

LIVE: ROOF: 1.0 KPa
SNOW: 2.08 KPa (0.55 KPa AT SLOPED ENDS)

D05-2 SEISMIC SYSTEM/LOADING DATA

• SEISMIC FORCE RESISTING SYSTEM (SFRS)

SFRS: SYSTEM & CONNECTIONS: (2012 OBC CLAUSE 4.1.8.9/4.1.8.10)
LATERAL LOAD RESISTING SYSTEM: CONVENTIONAL CONSTRUCTION (STEEL BRACE FRAME/CONCRETE SHEAR WALLS)
Rd = 1.5
Ro = 1.3
CSA STANDARD: CAN/CSA S16–01
APPLICABLE CLAUSE(S): 27.10

SFRS: DIAPHRAGMS & CONNECTIONS: (2012 OBC CLAUSE 4.1.8.15)
CSA STANDARD: CAN/CSA S16–01
APPLICABLE CLAUSE(S): 27.11

SFRS: SYSTEM FOUNDATIONS: (2012 OBC CLAUSE 4.1.8.16)
CSA STANDARD: CAN/CSA A23.3–04
APPLICABLE CLAUSE(S): ☐ FOR ANCHORED FOOTINGS ■ FOR UNANCHORED FOOTINGS
CONFIRMATION: FOUNDATIONS HAVE BEEN DESIGNED TO RESIST THE LATERAL FORCES APPLIED TO THE SFRS IN ACCORDANCE WITH THE 2012 OBC INCLUDING ALL APPLICABLE AMPLIFICATION FACTORS.

• SEISMIC IMPORTANCE FACTOR: (2012 OBC CLAUSE 4.1.8.5)
Ie =1.0

• REFERENCE CITY: KINGSTON

• SITE CLASS: THE NOTED SITE CLASSIFICATION FOR SEISMIC SITE RESPONSE AND SHEAR STRENGTH PARAMETERS INDICATED ARE AS REPORTED IN THE GEOTECHNICAL REPORT

☐ A ☐ B ■ C ☐ D ☐ E ☐ F (SITE SPECIFIC SPECTRUM:)

• PGA: 0.120

• RESPONSE SPECTRUM DATA:

• 5% DAMPED SPECTRAL RESPONSE ACCELERATION VALUES FOR REFERENCE CITY: (2012 OBC SUPPLEMENTARY STANDARD SB–1)

Sa(0.2) = 0.290
Sa(0.5) = 0.180
Sa(1.0) = 0.099
Sa(2.0) = 0.031

• DESIGN SPECTRAL RESPONSE ACCELERATION VALUES (DSRAV): (2012 OBC CLAUSE 4.1.8.4)

■ CLASS 'C': (Fa=1.0;Fv=1.0)

S(0) = 0.290
S(0.2) = 0.290
S(0.5) = 0.180
S(1.0) = 0.099
S(2.0) = 0.031
S(4.0) = 0.016

• SYSTEM RESTRICTION VALUE: IxFaSa(0.2)=0.29 ≥ 0.35 ☐ YES ■ NO

• PERIOD DATA:

EMPIRICAL PERIOD: (2012 OBC CLAUSE 4.1.8.11.(3))
$T_{a(EMPIRICAL)NS}$ =0.27 sec
$T_{a(EMPIRICAL)EW}$ =0.27 sec

MODAL PERIOD: (2012 OBC CLAUSE 4.1.8.11.(3)(d) AND 4.1.8.3.(8))
$T_{a(MODAL)NS}$ = N/A
$T_{a(MODAL)EW}$ = N/A

DESIGN PERIODS/MODE & MOMENT FACTORS: (2012 OBC CLAUSE (4.1.8.11(5))

Sa(0.2)/Sa(2.0) =8.5 ≥ 8.0 ■ YES ☐ NO

$T_{a(DESIGN)NS}$ =0.27 sec Mv =1.0 J=1.0
$T_{a(DESIGN)EW}$ =0.27 sec Mv =1.0 J=1.0

• DESIGN FUNDAMENTAL PERIOD BASED DSRAV: (2012 OBC CLAUSE 4.1.8.11(2))

S(Ta)ns =0.268
S(Ta)ew =0.268

• IRREGULARITY REVIEW: (2012 OBC CLAUSE 4.1.8.6)

		ROOF
1. VERTICAL STIFFNESS:	☐ YES	■ NO
2. WEIGHT:	☐ YES	■ NO
3. VERTICAL GEOMETRIC:	☐ YES	■ NO
4. IN PLANE DISCONTINUITY:	☐ YES	■ NO
5. OUT OF PLANE:	☐ YES	■ NO
6. WEAK STOREY:	☐ YES	■ NO
7. TORSIONAL:	☐ YES	■ NO
BEW	BEW = 1.0	
BNS	BNS = 1.0	
8. NON–ORTHOGONAL:	☐ YES	■ NO

CONCLUSION: BUILDING IS ■ REGULAR ☐ IRREGULAR
DYNAMIC ANALYSIS: ☐ REQUIRED ■ NOT REQUIRED
DYNAMIC PROCEDURE: METHOD: ☐ MODAL RESPONSE SPECTRUM ☐ NUMERICAL INTEGRATION TIME HISTORY ■ N/A

• TORSIONAL ECCENTRICITY:
■ ± 0.10 Dnx (4.1.8.11(1)a), B ≤1.7 EQUIV. STATIC FORCE PROCEDURE)
☐ ± 0.10 Dnx (4.1.8.12(4a)), B ≥1.7)
☐ ± 0.05 Dnx (4.1.8.12(4b), B< 1.7, 3–D DYNAMIC ANALYSIS)

• STRUCTURAL SEPARATION:
■ THE ADJACENT STRUCTURES HAVE BEEN SEPARATED IN ACCORDANCE WITH 4.1.8.14(1) OF THE 2012 O.B.C.
☐ N/A

• BUILDING WEIGHT FOR SEISMIC DESIGN: W = 5111 KN

• BASE SHEARS/MOMENTS:

V_{STATIC} = S(Ta)MvIEW/(RdRo) = W * 0.14 = 702 KN

• STATIC MAXIMUM/MINIMUM VALUES:

NORTH–SOUTH: (↕)

V_{MIN} = 5(2.0)MvIEW/(RdRo) = W* 0.02 = 90 KN
V_{MAX} = $\frac{2}{3}$ S(0.2)IEW/(RdRo) = W* 0.10 = 507 KN

EAST–WEST: (↔)

V_{MIN} = 5(2.0)MvIEW/(RdRo) = W* 0.02 = 90 KN
V_{MAX} = $\frac{2}{3}$ S(0.2)IEW/(RdRo) = W* 0.10 = 507 KN

SEISMIC LOADS		
EQUIVALENT STATIC (ES) FORCE PROCEDURE 2012 OBC CLAUSE 4.1.8.11(1)–(10)	DYNAMIC ANALYSIS (DYI) PROCEDURE (INITIAL SCALING FACTOR) 2012 OBC CLAUSE 4.1.8.12(1)–(5) (1)(2)	DESIGN (D) LOADS (3)
NORTH–SOUTH: (↕)	NORTH–SOUTH: (↕)	NORTH–SOUTH: (↕)
V_{ESNS} = W* 0.10 = 507 KN M_{ESNS} = 4715 KNm	V_{DYNNS} = N/A M_{DYNNS} = N/A M_{PMR} = N/A	V_{DNS} = 507 KN M_{DNS} = 4715 KNm NON–ORTHOGONAL EFFECTS HAVE BEEN CONSIDERED IN ACCORDANCE WITH 2012 OBC CLAUSE 4.1.8.8 (c) ☐ YES ■ N/A
EAST–WEST: (↔)	EAST–WEST: (↔)	EAST–WEST: (↔)
V_{ESEW} = W* 0.10 = 507 KN M_{ESEW} = 4715 KNm	V_{DYNEW} = N/A M_{DYNEW} = N/A M_{PMR} = N/A	V_{DEW} = 507 KN M_{DEW} = 4715 KNm NON–ORTHOGONAL EFFECTS HAVE BEEN CONSIDERED IN ACCORDANCE WITH 2012 OBC CLAUSE 4.1.8.8 (c) ☐ YES ■ N/A

NOTES:

1. DESIGN LOAD SHEAR VALUES ARE BASED ON THE EVALUATION OF Vds AND Vdn IN ACCORDANCE WITH 4.1.8.12 (3),(5) AND (7) OF THE 2012 OBC. LOADS INDICATED SHOW THE DESIGN BASE SHEAR AND CORRESPONDING OVERTURNING MOMENT.
2. N/A = NOT USED IN THE DESIGN OF THE BUILDING.

D05-3 WIND LOADS

WIND:

q= 0.47 KPa
(1 IN 50 YEARS)

Iw = 1.0 (ULS)
Iw = 0.75 (ULS)
CaCg = 0.75 TO –0.55

NORTH–SOUTH: (↕)
Vbase = 896 KN
Mbase = 4166 KNm

EAST–WEST: (↔)
Vbase = 262 KN
Mbase = 1218 KNm

LICENSED PROFESSIONAL ENGINEER A. R. MARCOUX PROVINCE OF ONTARIO

Public Works and Government Services Canada
Architectural and Engineering Services
Ontario Region

Travaux publics et Services gouvernementaux Canada
Services d'architecture et de génie
Région de l'Ontario

Architect/Structural Consultants:
CLELAND JARDINE ENGINEERING LTD
200–580 TERRY FOX DR. KANATA, ON K2L 4B9 (613) 591–1193
CJE # 15-1234A

Mechanical & Electrical Consultants:
Jp2g Consultants Inc.
ENGINEERS · PLANNERS · PROJECT MANAGERS
12 INTERNATIONAL DRIVE, PEMBROKE, ON Phone:(613)735-2507, Fax2(613)735-4513
1150 MORRISON DRIVE, SUITE 410, OTTAWA, ON Phone:(613)828-7800, Fax: (613)828-2600

revision		date
04	RE–ISSUED FOR TENDER	AUG 15/16
03	ISSUED FOR TENDER	JUL 07/16
02	ISSUED FOR 99% REVIEW	MAR 7/16
01	ISSUED FOR 50% REVIEW	FEB 1/16

Do not scale drawings. Verify all dimensions and conditions on site and immediately notify the departmental representative of all discrepancies.

A Detail No. No. du détail
B drawing no. – where detail required dessin no. – où détail exigé
C drawing no. – where detailed dessin no. – où détaillé

project title / titre du projet
KINGSTON ONTARIO
COLLINS BAY INSTITUTION
CORRECTIONAL SERVICE CANADA
1455 BATH ROAD
CBI BLD'G B1: INTERIOR DEMOLITION

drawing title / titre du dessin
GENERAL NOTES & DETAILS

drawn by / dessine par: M.E.
designed by / conc par: A.M./C.F.
approved by / approuve par: A.M.
tender / soumission: JACK TO
project manager / administrateur de projets
project date / date du projet: 2016/02/19
project no. / no. du projet: R.051672.001
drawing no. / dessine no.: S000

GSC–A1

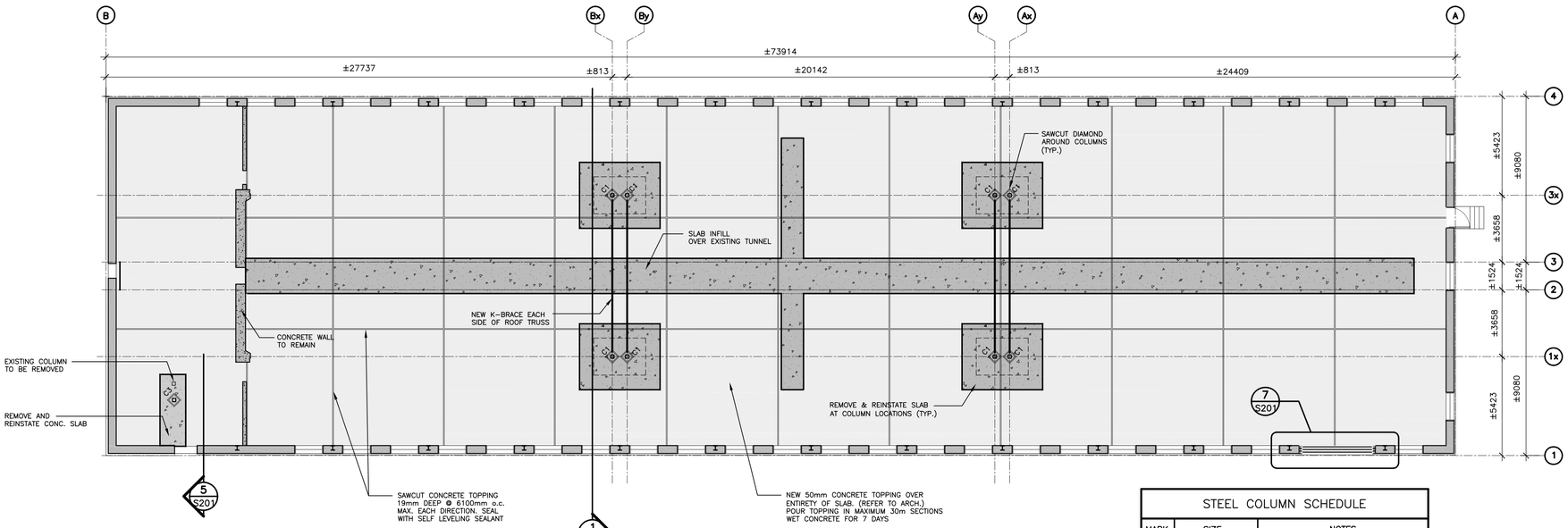

2 S100 **PLAN: GROUND FLOOR**
SCALE: 1:150

STEEL COLUMN SCHEDULE		
MARK	SIZE	NOTES
C1	HSS 152x152x6.4	c/w 300x300x16mm BASE PLATE w/ 4–19mmø SEISMIC HEADED ANCHORS (600mm EMBEDMENT)
C2	HSS 127x127x6.4	c/w 600x200x16mm BASE PLATE w/ 5–16mmø THREADED RODS IN ADHESIVE ANCHORING SYSTEM (190mm EMBED.) REFER TO NOTES ON DRAWING S000 FOR THREADED ROD AND ADHESIVE SPECIFICATIONS. REFER TO BASE PLATE DETAIL 8/S200
C3	HSS 102x102x6.4	c/w 200x125x16mm BASE PLATE w/ 2–12.7mmø EXPANSION ANCHORS (120mm EMBED.) REFER TO NOTES ON DRAWINGS S000 FOR ANCHOR SPECIFICATIONS

NOTES:
1. PROVIDE 25mm NON–SHRINK GROUT BED BELOW BASE PLATE U/N.
2. SEISMIC HEADED ANCHORS ARE MINIMUM WASHER PLATE OF 76x76x10mm c/w NUT ABOVE & BELOW PLATE. TACK WELD NUT TO PLATE.

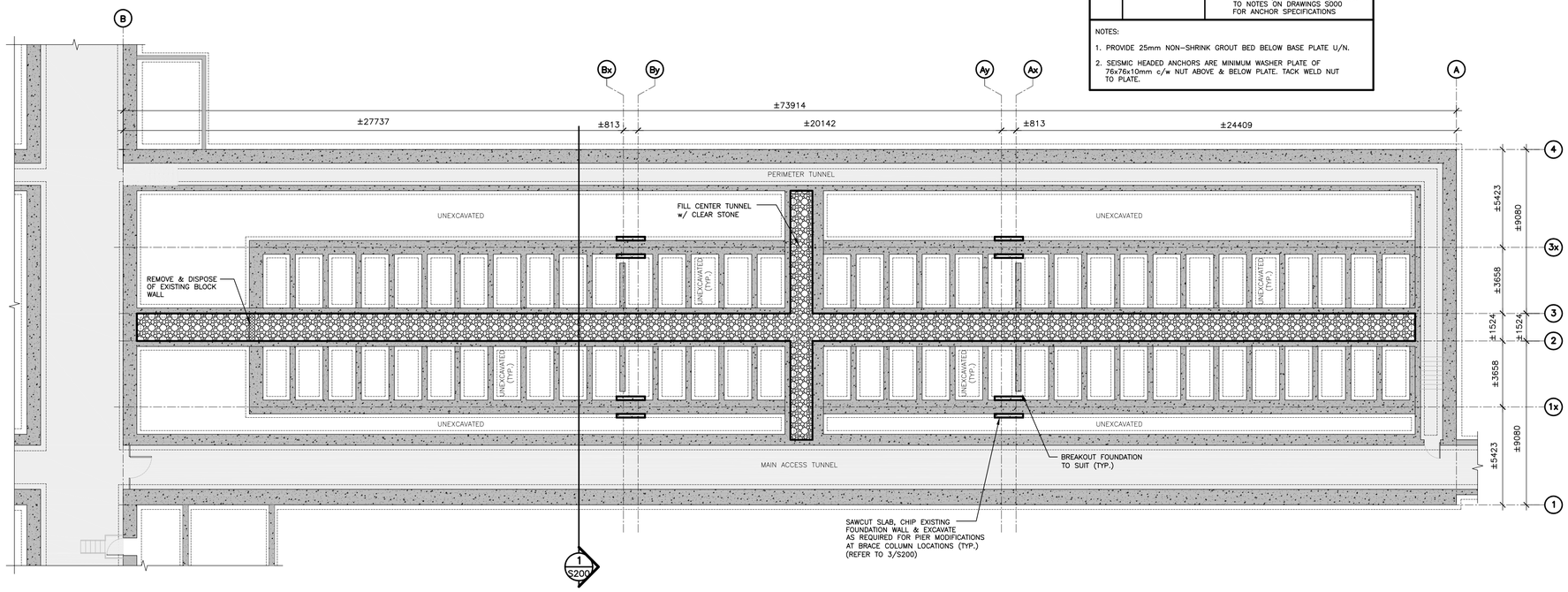

1 S100 **PLAN: BASEMENT**
SCALE: 1:150

LICENSED PROFESSIONAL ENGINEER
A. R. MARCOUX
PROVINCE OF ONTARIO

Public Works and Government Services Canada
Architectural and Engineering Services
Ontario Region

Travaux publics et Services gouvernementaux Canada
Services d'architecture et de génie
Région de l'Ontario

Architect/Structural Consultants:
CLELAND JARDINE ENGINEERING LTD
200-580 TERRY FOX DR.
KANATA, ON K2L 4B9
(613) 591-1193

CJE # 15-1234A

Mechanical & Electrical Consultants:
Jp2g Consultants Inc.
ENGINEERS · PLANNERS · PROJECT MANAGERS
12 INTERNATIONAL DRIVE, PEMBROKE, ON
Phone:(613)735-2507, Fax(613)735-4513
1150 MORRISON DRIVE, SUITE 410, OTTAWA, ON
Phone:(613)828-7800, Fax: (613)828-2800

N

revision		date
04	RE–ISSUED FOR TENDER	AUG 15/16
03	ISSUED FOR TENDER	JUL 07/16
02	ISSUED FOR 99% REVIEW	MAR 7/16
01	ISSUED FOR 50% REVIEW	FEB 1/16

Do not scale drawings. Verify all dimensions and conditions on site and immediately notify the departmental representative of all discrepancies.

A Detail No. / No. du détail
B drawing no. – where detail required / dessin no. – où détail exigé
C drawing no. – where detailed / dessin no. – où détaillé

project title / titre du projet
KINGSTON ONTARIO
COLLINS BAY INSTITUTION
CORRECTIONAL SERVICE CANADA
1455 BATH ROAD
CBI BLD'G B1: INTERIOR DEMOLITION

drawing title / titre du dessin
BASEMENT & GROUND FLOOR PLANS

drawn by / dessine par: M.E.
designed by / conc par: A.M./C.F.
approved by / approuve par: A.M.
tender / soumission: JACK TO
project manager / administrateur de projets
project date / date du projet: 2016/02/19
project no. / no. du projet: R.051672.001
drawing no. / dessine no.: S100

GSC–A1

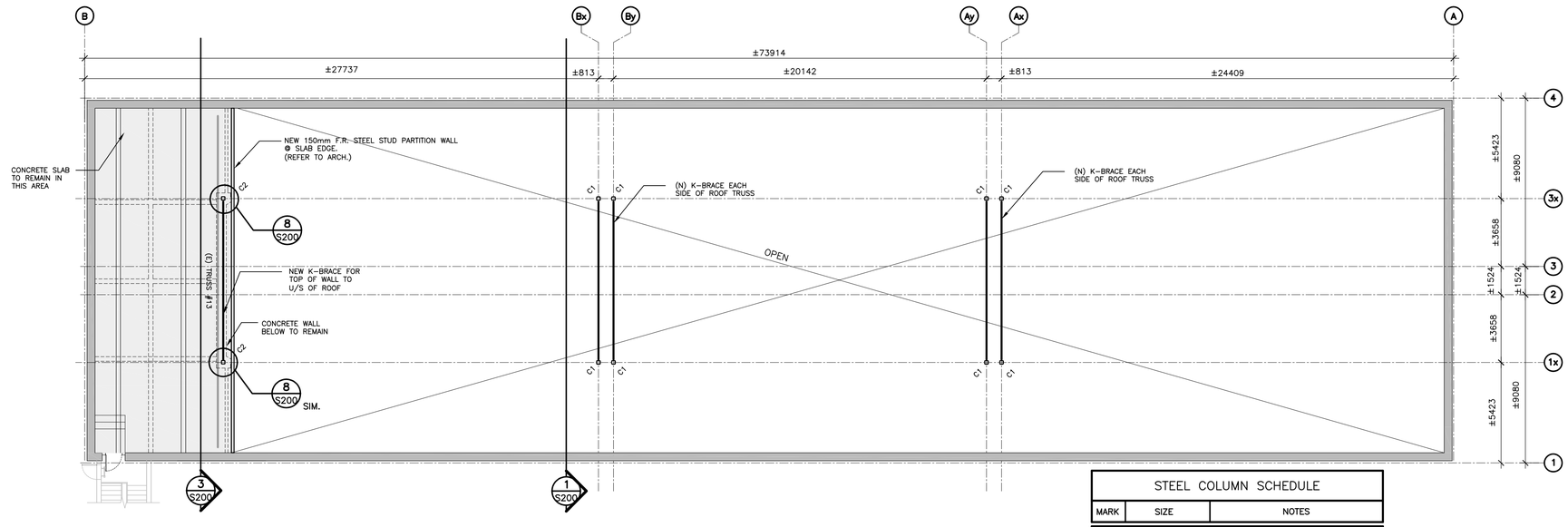

2 S101 **PLAN: THIRD FLOOR**

SCALE: 1:150

STEEL COLUMN SCHEDULE

MARK	SIZE	NOTES
C1	HSS 152x152x6.4	c/w 300x300x16mm BASE PLATE w/ 4–19mmø SEISMIC HEADED ANCHORS (600mm EMBEDMENT)
C2	HSS 127x127x6.4	c/w 600x200x16mm BASE PLATE w/ 5–16mmø THREADED RODS IN ADHESIVE ANCHORING SYSTEM (190mm EMBED.) REFER TO NOTES ON DRAWING S000 FOR THREADED ROD AND ADHESIVE SPECIFICATIONS. REFER TO BASE PLATE DETAIL 8/S200
C3	HSS 102x102x6.4	c/w 200x125x16mm BASE PLATE w/ 2–12.7mmø EXPANSION ANCHORS (120mm EMBED.) REFER TO NOTES ON DRAWINGS S000 FOR ANCHOR SPECIFICATIONS

NOTES:

1. PROVIDE 25mm NON–SHRINK GROUT BED BELOW BASE PLATE U/N.
2. SEISMIC HEADED ANCHORS ARE MINIMUM WASHER PLATE OF 76x76x10mm c/w NUT ABOVE & BELOW PLATE. TACK WELD NUT TO PLATE.

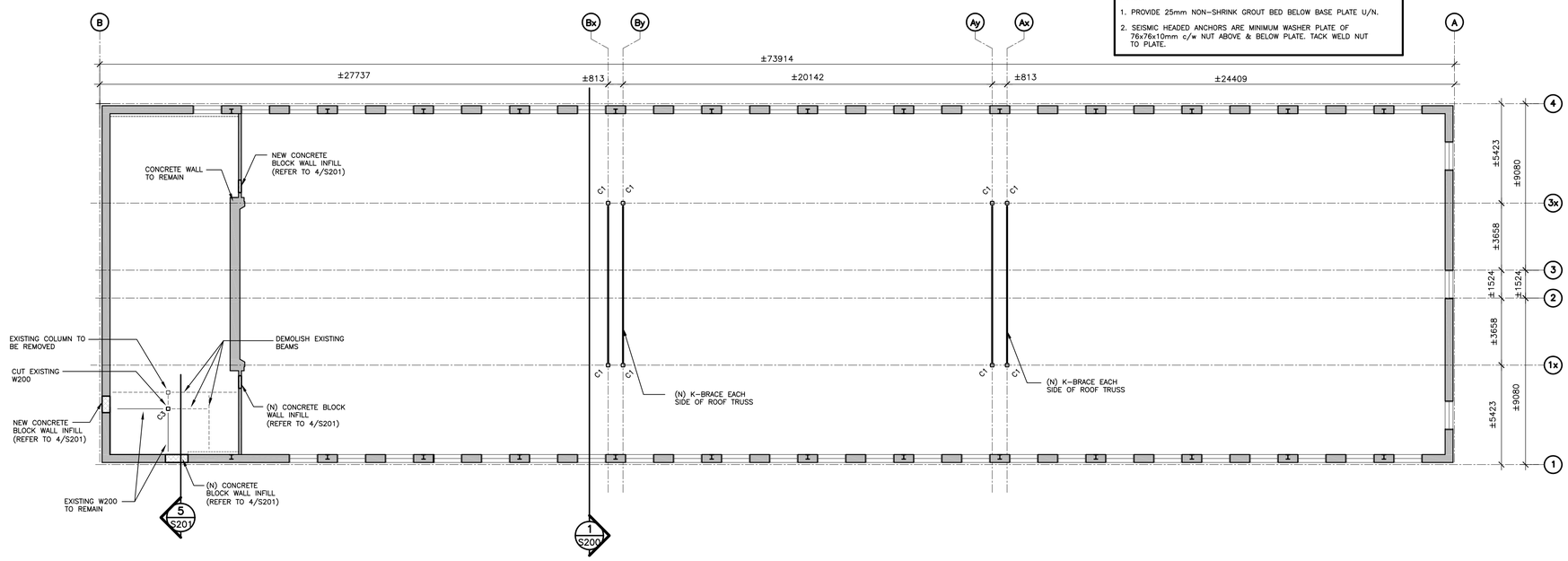

1 S101 **PLAN: SECOND FLOOR**

SCALE: 3/32" = 1'–0"

LICENSED PROFESSIONAL ENGINEER A. R. MARCOUX PROVINCE OF ONTARIO

Public Works and Government Services Canada
Architectural and Engineering Services
Ontario Region

Travaux publics et Services gouvernementaux Canada
Services d'architecture et de génie
Région de l'Ontario

Architect/Structural Consultants:

CLELAND JARDINE ENGINEERING LTD
200-580 TERRY FOX DR.
KANATA, ON K2L 4B9
(613) 591-1193

CJE # 15-1234A

Mechanical & Electrical Consultants:

Jp2g Consultants Inc.
ENGINEERS · PLANNERS · PROJECT MANAGERS

12 INTERNATIONAL DRIVE, PEMBROKE, ON
Phone: (613)735-2507, Fax:(613)735-4513

1150 MORRISON DRIVE, SUITE 410, OTTAWA, ON
Phone: (613)828-7800, Fax: (613)828-2800

N

revision		date
04	RE–ISSUED FOR TENDER	AUG 15/16
03	ISSUED FOR TENDER	JUL 07/16
02	ISSUED FOR 99% REVIEW	MAR 7/16
01	ISSUED FOR 50% REVIEW	FEB 1/16

Do not scale drawings. Verify all dimensions and conditions on site and immediately notify the departmental representative of all discrepancies.

A B C
A Detail No. / No. du détail
B drawing no. – where detail required / dessin no. – où détail exigé
C drawing no. – where detailed / dessin no. – où détaillé

project title / titre du projet
KINGSTON ONTARIO
COLLINS BAY INSTITUTION
CORRECTIONAL SERVICE CANADA
1455 BATH ROAD
CBI BLD'G B1: INTERIOR DEMOLITION

drawing title / titre du dessin
SECOND & THIRD FLOOR PLANS

drawn by / dessine par: M.E.

designed by / conc par: A.M./C.F.

approved by / approuve par: A.M.

tender / soumission: JACK TO

project manager / administrateur de projets

project date / date du projet: 2016/02/19

project no. / no. du projet: R.051672.001

drawing no. / dessine no.: S101

GSC–A1

0 10 20 30 40 50 60 70 80 90 100 110 120 130 140 150 160 170 180 190 200 millimetres

LICENSED PROFESSIONAL ENGINEER
A. R. MARCOUX
PROVINCE OF ONTARIO

Public Works and Government Services Canada
Architectural and Engineering Services
Ontario Region

Travaux publics et Services gouvernementaux Canada
Services d'architecture et de génie
Région de l'Ontario

Architect/Structural Consultants:

CLELAND JARDINE ENGINEERING LTD
200-340 TERRY FOX DR.
KANATA, ON K2L 4B9
(613) 591-1193

CJE # 15-1234A

Mechanical & Electrical Consultants:

Jp2g Consultants Inc.
ENGINEERS · PLANNERS · PROJECT MANAGERS

12 INTERNATIONAL DRIVE, PEMBROKE, ON
Phone:(613)735-2507, Fax(613)735-4513

1150 MORRISON DRIVE, SUITE 410, OTTAWA, ON
Phone:(613)828-7800, Fax:(613)828-2800

STEEL COLUMN SCHEDULE

MARK	SIZE	NOTES
C1	HSS 152x152x6.4	c/w 300x300x16mm BASE PLATE w/ 4–19mmø SEISMIC HEADED ANCHORS (600mm EMBEDMENT)
C2	HSS 127x127x6.4	c/w 600x200x16mm BASE PLATE w/ 5–16mmø THREADED RODS IN ADHESIVE ANCHORING SYSTEM (190mm EMBED.) REFER TO NOTES ON DRAWING S000 FOR THREADED ROD AND ADHESIVE SPECIFICATIONS. REFER TO BASE PLATE DETAIL 8/S200
C3	HSS 102x102x6.4	c/w 200x125x16mm BASE PLATE w/ 2–12.7mmø EXPANSION ANCHORS (120mm EMBED.) REFER TO NOTES ON DRAWINGS S000 FOR ANCHOR SPECIFICATIONS

NOTES:

1. PROVIDE 25mm NON–SHRINK GROUT BED BELOW BASE PLATE U/N.
2. SEISMIC HEADED ANCHORS ARE MINIMUM WASHER PLATE OF 76x76x10mm c/w NUT ABOVE & BELOW PLATE. TACK WELD NUT TO PLATE.

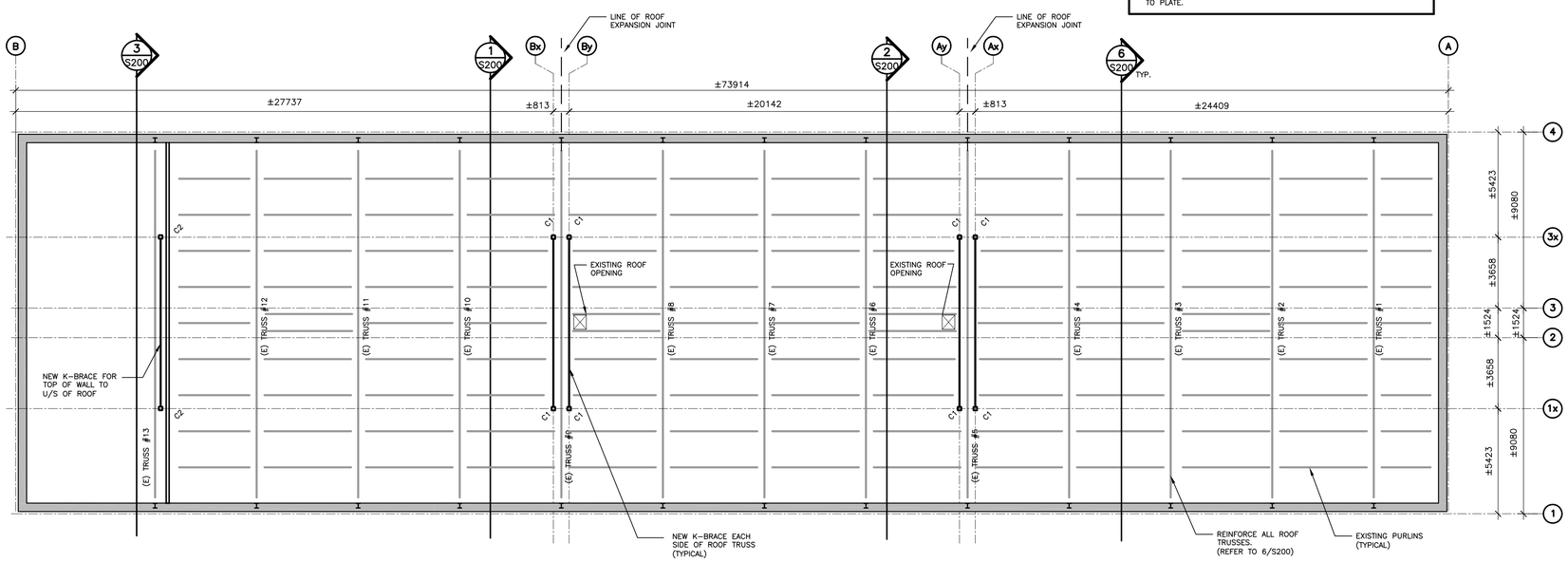

1 S102 PLAN: ROOF FRAMING
SCALE: 1:150

N

revision		date
04	RE–ISSUED FOR TENDER	AUG 15/16
03	ISSUED FOR TENDER	JUL 07/16
02	ISSUED FOR 99% REVIEW	MAR 7/16
01	ISSUED FOR 50% REVIEW	FEB 1/16

Do not scale drawings. Verify all dimensions and conditions on site and immediately notify the departmental representative of all discrepancies.

A Detail No. No. du détail
B drawing no. – where detail required dessin no. – où détail exigé
C drawing no. – where detailed dessin no. – où détaillé

project title / titre du projet
KINGSTON ONTARIO
COLLINS BAY INSTITUTION
CORRECTIONAL SERVICE CANADA
1455 BATH ROAD
CBI BLD'G B1: INTERIOR DEMOLITION

drawing title / titre du dessin
ROOF FRAMING

drawn by / dessine par: M.E.
designed by / conc par: A.M./C.F.
approved by / approuve par: A.M.
tender / soumission: JACK TO
project manager / administrateur de projets
project date / date du projet: 2016/02/19
project no. / no. du projet: R.051672.001
drawing no. / dessine no.: S102

GSC–A1

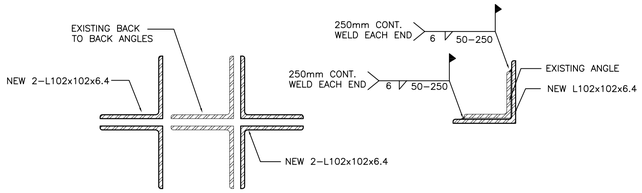

9 / S200 DETAIL: MEMBER REINFORCEMENT
SCALE: 1:5

10 / S200 DETAIL: MEMBER REINFORCMENT
SCALE: 1:5

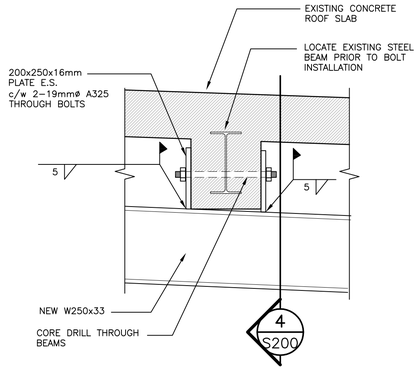

5 / S200 SECTION: BEAM CONNECTION
SCALE 1:10

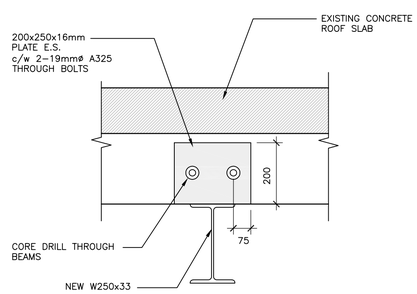

4 / S200 SECTION: BEAM CONNECTION
SCALE 1:10

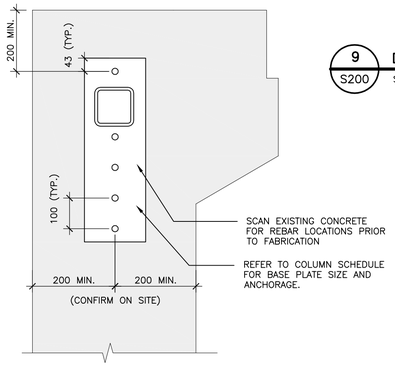

8 / S200 DETAIL: C2 BASE PLATE
SCALE 1:10

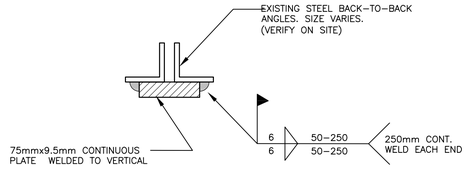

7 / S200 SECTION: VERTICAL MEMBER REINFORCEMENT
SCALE: 1:2

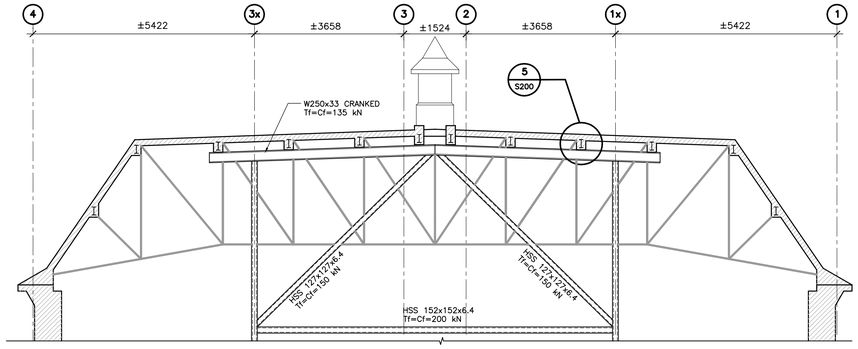

2 / S200 SECTION: CROSS SECTION
SCALE: 1:75

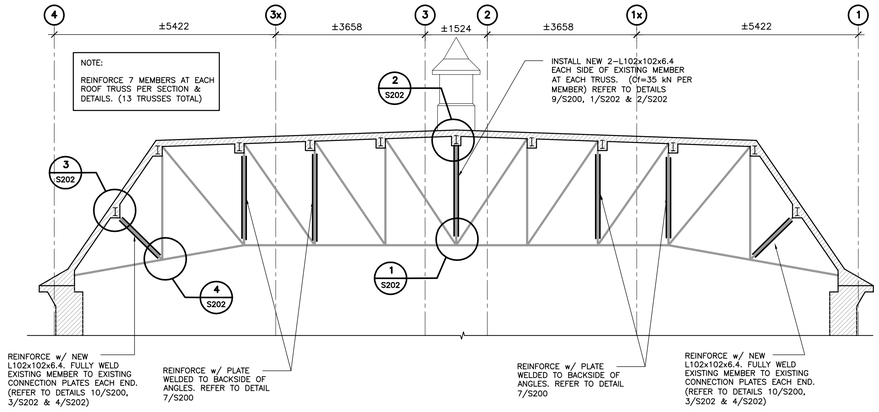

6 / S200 SECTION: CROSS SECTION (TYPICAL REINFORCEMENT ALL TRUSSES)
SCALE: 1:75

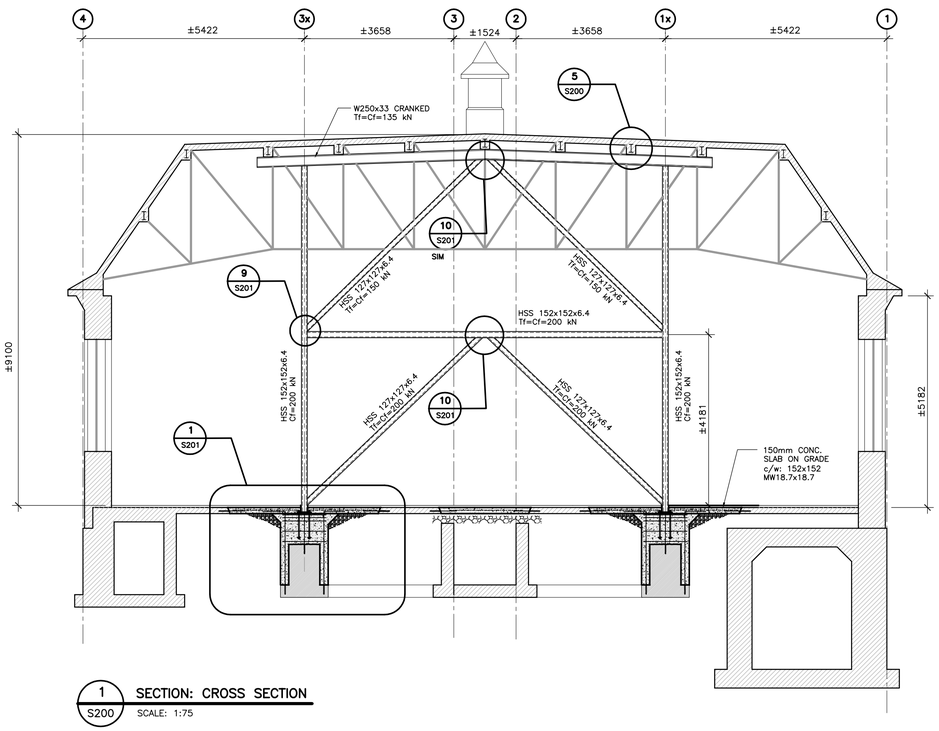

1 / S200 SECTION: CROSS SECTION
SCALE: 1:75

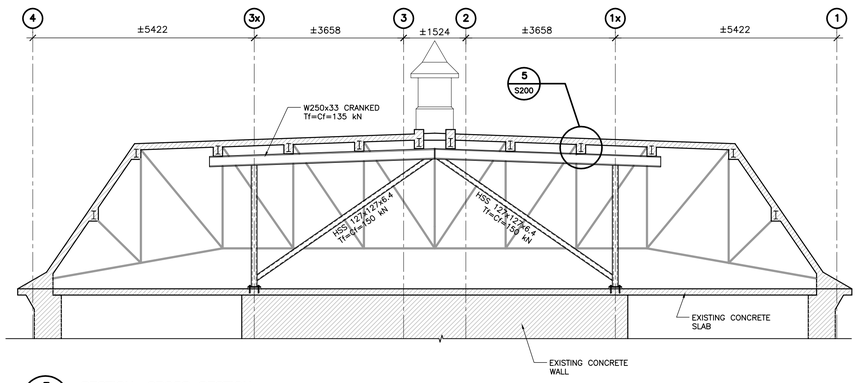

3 / S200 SECTION: CROSS SECTION
SCALE: 1:75

GSC–A1

Public Works and Government Services Canada
Architectural and Engineering Services
Ontario Region

Travaux publics et Services gouvernementaux Canada
Services d'architecture et de génie
Région de l'Ontario

LICENSED PROFESSIONAL ENGINEER
A. R. MARCOUX
PROVINCE OF ONTARIO

Architect/Structural Consultants:
CLELAND JARDINE ENGINEERING LTD
200–580 TERRY FOX DR.
KANATA, ON K2L 4B9
(613) 592-1193

CJE # 15-1234A

Mechanical & Electrical Consultants:
Jp2g Consultants Inc.
ENGINEERS · PLANNERS · PROJECT MANAGERS
12 INTERNATIONAL DRIVE, PEMBROKE, ON
Phone:(613)735-2507, Fax(613)735-4513
1150 MORRISON DRIVE, SUITE 410, OTTAWA, ON
Phone:(613)828-7800, Fax: (613)828-2800

revision		date
04	RE–ISSUED FOR TENDER	AUG 15/16
03	ISSUED FOR TENDER	JUL 07/16
02	ISSUED FOR 99% REVIEW	MAR 7/16
01	ISSUED FOR 50% REVIEW	FEB 1/16

Do not scale drawings. Verify all dimensions and conditions on site and immediately notify the departmental representative of all discrepancies.

A Detail No. / No. du détail
B drawing no. – where detail required / dessin no. – où détail exigé
C drawing no. – where detailed / dessin no. – où détaillé

project title / titre du projet
KINGSTON ONTARIO
COLLINS BAY INSTITUTION
CORRECTIONAL SERVICE CANADA
1455 BATH ROAD
CBI BLD'G B1: INTERIOR DEMOLITION

drawing title / titre du dessin
SECTIONS & DETAILS

drawn by / dessine par: M.E.
designed by / conc par: A.M./C.F.
approved by / approuve par: A.M.
tender / soumission: JACK TO
project manager / administrateur de projets
project date / date du projet: 2016/02/19
project no. / no. du projet: R.051672.001
drawing no. / dessine no.: S200

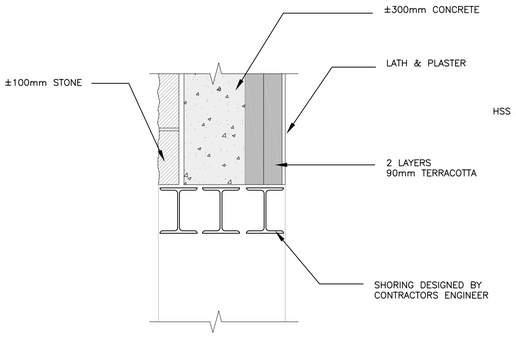

8 S201 SECTION: TEMPORARY LINTEL
SCALE 1:15

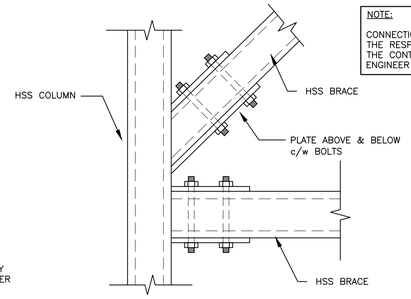

NOTE:
CONNECTION DESIGN IS THE RESPONSIBILITY OF THE CONTRACTORS ENGINEER

9 S201 SECTION: BRACE CONNECTION
SCALE 1:10

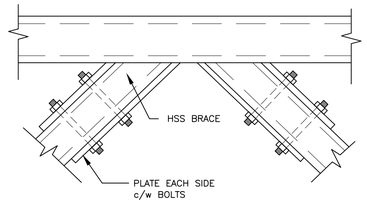

10 S201 SECTION: BRACE CONNECTION
SCALE 1:10

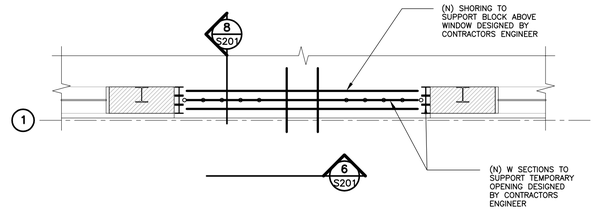

7 S201 PLAN: TEMPORARY SHORING
SCALE: 1:50

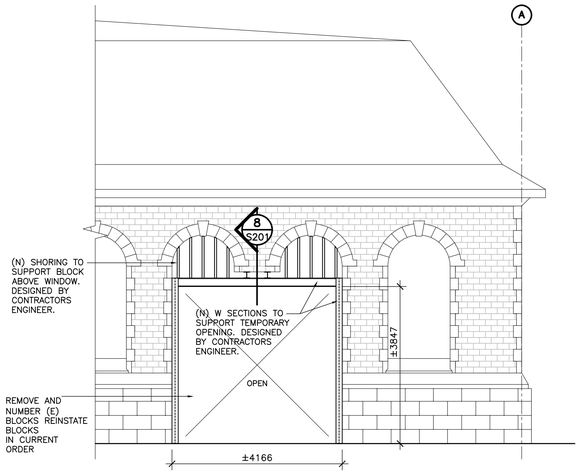

6 S201 ELEVATION: TEMPORARY SHORING
SCALE: 1:75

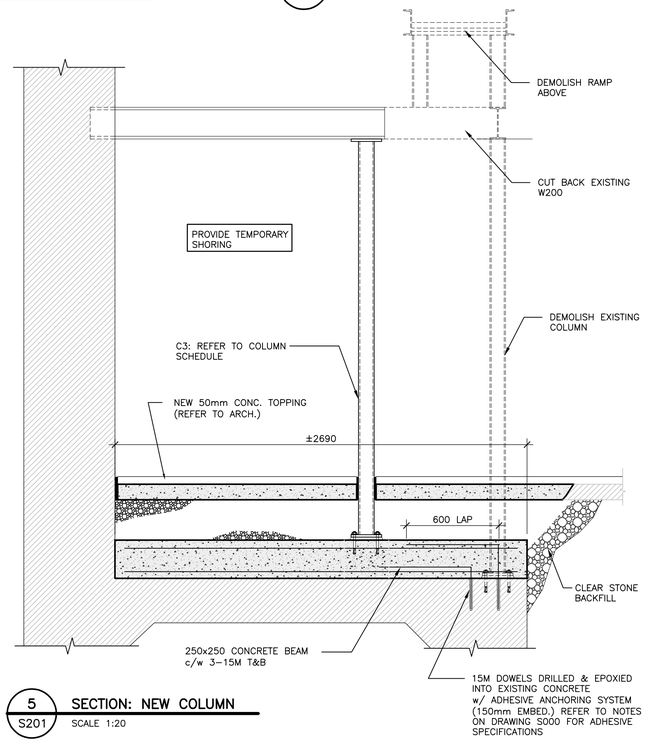

5 S201 SECTION: NEW COLUMN
SCALE 1:20

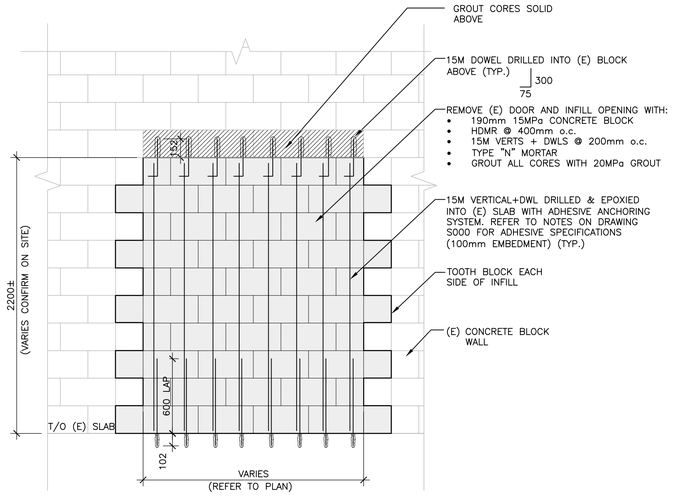

4 S201 ELEVATION: TYPICAL BLOCK WALL INFILL
SCALE: 1:25

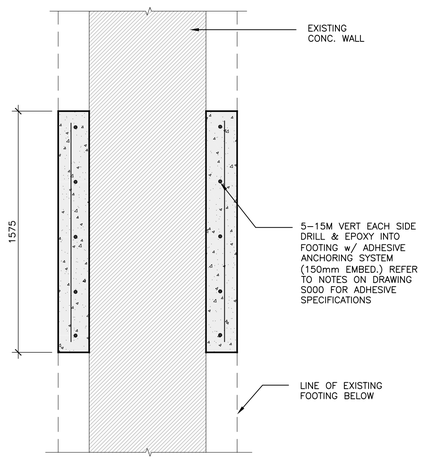

3 S201 SECTION: PIER REINFORCEMENT
SCALE 1:20

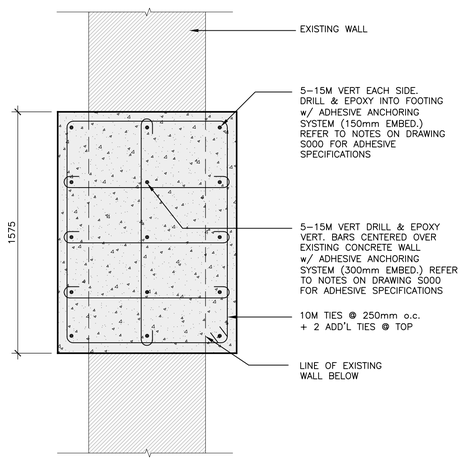

2 S201 SECTION: PIER REINFORCEMENT
SCALE 1:20

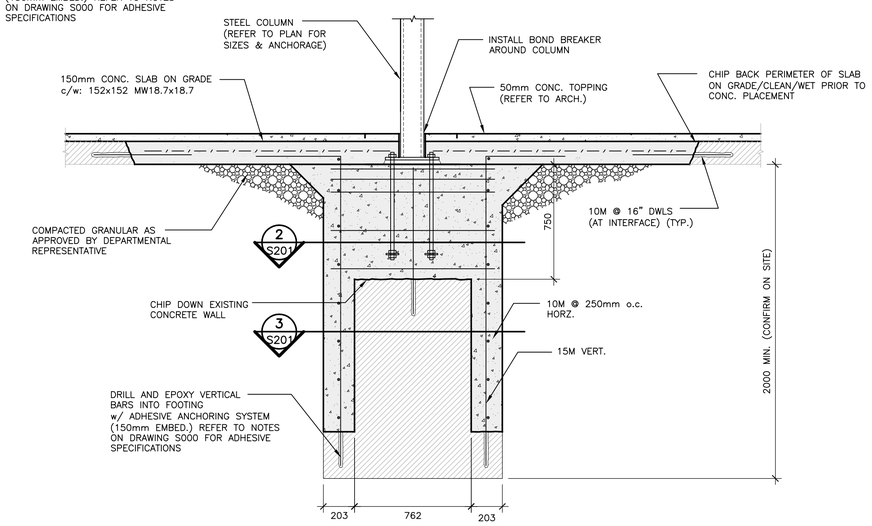

1 S201 SECTION: PIER REINFORCEMENT
SCALE 1:20

LICENSED PROFESSIONAL ENGINEER
A. R. MARCOUX
PROVINCE OF ONTARIO

Public Works and Government Services Canada
Architectural and Engineering Services
Ontario Region

Travaux publics et Services gouvernementaux Canada
Services d'architecture et de génie
Région de l'Ontario

Architect/Structural Consultants:
CLELAND JARDINE ENGINEERING LTD
200-580 TERRY FOX DR.
KANATA, ON K2L 4B9
(613) 592-1525

CJE # 15-1234A

Mechanical & Electrical Consultants:
Jp2g Consultants Inc.
ENGINEERS · PLANNERS · PROJECT MANAGERS
12 INTERNATIONAL DRIVE, PEMBROKE, ON
Phone:(613)735-2507, Fax(613)735-4513
1150 MORRISON DRIVE, SUITE 410, OTTAWA, ON
Phone:(613)828-7800, Fax: (613)828-2600

revision		date
04	RE-ISSUED FOR TENDER	AUG 15/16
03	ISSUED FOR TENDER	JUL 07/16
02	ISSUED FOR 99% REVIEW	MAR 7/16
01	ISSUED FOR 50% REVIEW	FEB 1/16

Do not scale drawings. Verify all dimensions and conditions on site and immediately notify the departmental representative of all discrepancies.

A B C
A Detail No. / No. du détail
B drawing no. – where detail required / dessin no. – où détail exigé
C drawing no. – where detailed / dessin no. – où détaillé

project title / titre du projet
KINGSTON ONTARIO
COLLINS BAY INSTITUTION
CORRECTIONAL SERVICE CANADA
1455 BATH ROAD
CBI BLD'G B1: INTERIOR DEMOLITION

drawing title / titre du dessin
SECTIONS & DETAILS

drawn by / dessine par: M.E.
designed by / conc par: A.M./C.F.
approved by / approuve par: A.M.
tender / soumission: JACK TO
project manager / administrateur de projets
project date / date du projet: 2016/02/19
project no. / no. du projet: R.051672.001
drawing no. / dessine no.: S201

GSC-A1

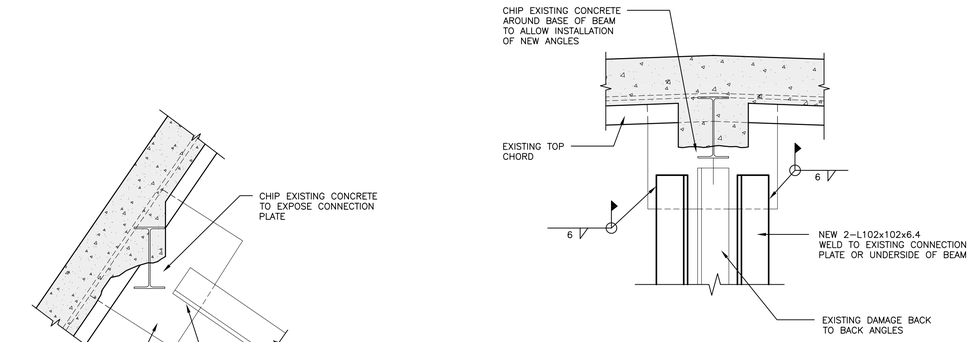

2 / S202 DETAIL: BRACE CONNECTION
SCALE 1:10

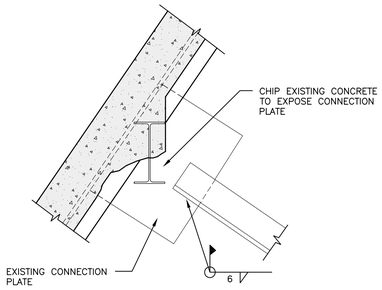

3 / S202 DETAIL: BRACE CONNECTION
SCALE 1:10

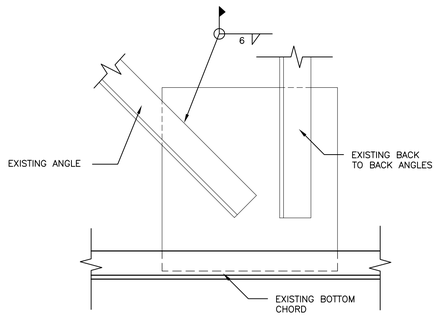

4 / S202 DETAIL: BRACE CONNECTION
SCALE 1:10

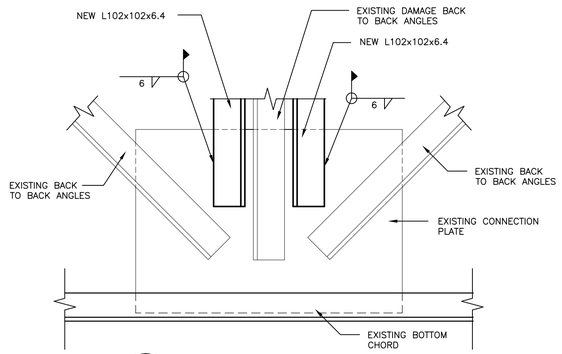

1 / S202 DETAIL: BRACE CONNECTION
SCALE 1:10

LICENSED PROFESSIONAL ENGINEER
A. R. MARCOUX
PROVINCE OF ONTARIO

Public Works and Government Services Canada
Architectural and Engineering Services
Ontario Region

Travaux publics et Services gouvernementaux Canada
Services d'architecture et de génie
Région de l'Ontario

Architect/Structural Consultants:
CLELAND JARDINE ENGINEERING LTD
200-580 TERRY FOX DR.
KANATA, ON K2L 4B9
(613) 591-1935
CJE # 15-1234A

Mechanical & Electrical Consultants:
Jp2g Consultants Inc.
ENGINEERS · PLANNERS · PROJECT MANAGERS
12 INTERNATIONAL DRIVE, PEMBROKE, ON
Phone:(613)735-2507, Fax(613)735-4513
1150 MORRISON DRIVE, SUITE 410, OTTAWA, ON
Phone:(613)828-7800, Fax: (613)828-2800

revision		date
04	RE–ISSUED FOR TENDER	AUG 15/16
03	ISSUED FOR TENDER	JUL 07/16
02	ISSUED FOR 99% REVIEW	MAR 7/16
01	ISSUED FOR 50% REVIEW	FEB 1/16

Do not scale drawings. Verify all dimensions and conditions on site and immediately notify the departmental representative of all discrepancies.

A / B C
A Detail No. / No. du détail
B drawing no. – where detail required / dessin no. – où détail exigé
C drawing no. – where detailed / dessin no. – où détaillé

project title / titre du projet
KINGSTON ONTARIO
COLLINS BAY INSTITUTION
CORRECTIONAL SERVICE CANADA
1455 BATH ROAD
CBI BLD'G B1: INTERIOR DEMOLITION

drawing title / titre du dessin
SECTIONS & DETAILS

drawn by / dessine par: M.E.
designed by / conc par: A.M./C.F.
approved by / approuve par: A.M.
tender / soumission: JACK TO
project manager / administrateur de projets
project date / date du projet: 2016/02/19
project no. / no. du projet: R.051672.001
drawing no. / dessine no.: S202

GSC–A1