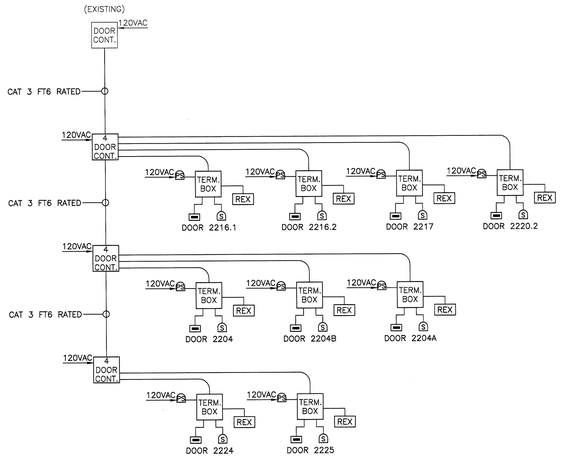

SCHEMATIC – ACCESS CONTROL RISER DIAGRAM (1)
SCALE : N.T.S.

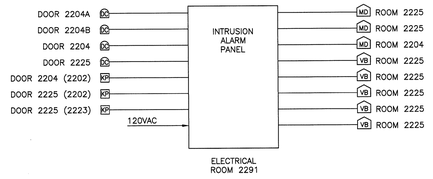

SCHEMATIC – INTRUSION ALARM RISER DIAGRAM (2)
SCALE : N.T.S.

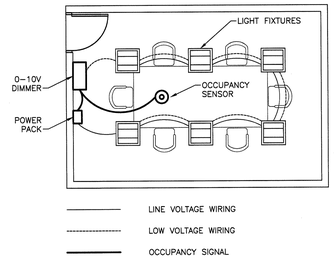

SCHEMATIC – TYPICAL 0–10V DIMMING WITH POWER PACK AND OCCUPANCY SENSOR (3)
SCALE : N.T.S.

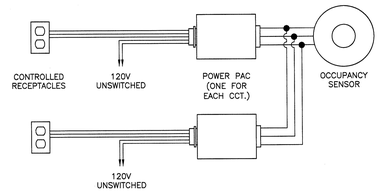

TYPICAL COUNTERTOP RECEPTACLE DIAGRAM (4)
SCALE : N.T.S.

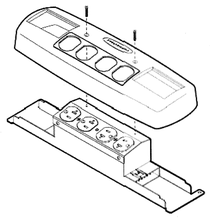

DETAIL– TYPICAL MEETING ROOM CONNECTRAC QUAD DEVICE (5)
SCALE : N.T.S.

Public Works and Government Services Canada / Travaux Publics et Services gouvernementaux Canada

FOWLER BAULD & MITCHELL architecture

Fowler Bauld & Mitchell Ltd.
PO Box 514, Suite 102
1660 Hollis Street
Halifax, Nova Scotia B3J 2R7
Tel: 902 429 4100
Fax: 902 423 3063
architects@fbm.ns.ca
www.fbm.ns.ca

CBCL LIMITED
Consulting Engineers
CBCL Proj. No. 163409.00

REGISTERED PROFESSIONAL ENGINEER
Province of New Brunswick
#M6830
Troy M. Langlois
NOVA SCOTIA
Ministère de l'Environnement
INGÉNIEUR INMATRICULÉ

revisions		date
1	ISSUED FOR TENDER	SEP 13 2016

project / projet
CORRECTIONAL SERVICES CANADA 2ND FLOOR FIT–UP

drawing / dessin
ELECTRICAL SCHEMATICS

designed TML / conçu
date
drawn ARJ / dessiné
date
approved / approuvé
date
Tender / Soumission
PWGSC Project Manager / Administrateur de projets TPSGC 2016/09/16
project number / no. du projet
R.083937.002
drawing no. / no. du dessin
E9

E-DRM/GDD-E: 544592

PWGSC AD (2004)