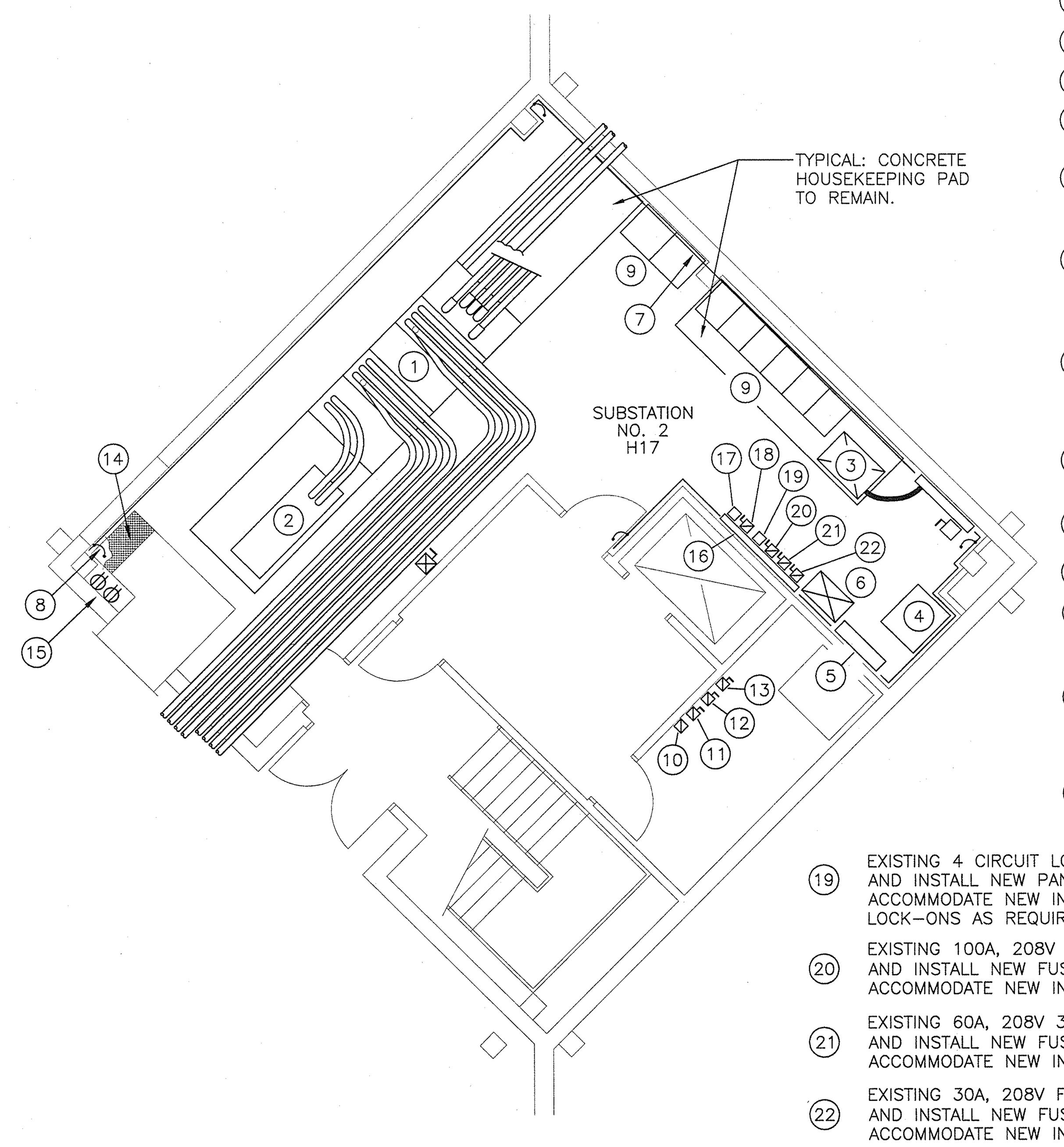

1. EXISTING 347/600V, 5 SECTION LOW VOLTAGE DISTRIBUTION BOARD, TO BE REMOVED.
2. EXISTING 300KVAR CAPACITOR, 347/600V, 3PH, 4W, TO BE RELOCATED.
3. EXISTING 75KVA TRANSFORMER H171ET2, 600V:120/208V, TO REMAIN.
4. EXISTING TRANSFER SWITCH H17 NO. 2, LOOP 2, 347/600V, TO REMAIN.
5. EXISTING EMERGENCY DISTRIBUTION PANEL H171EA, 347/600V, TO REMAIN.
6. EXISTING 45KVA TRANSFORMER H171ET1, 600V:120/208V, TO REMAIN.
7. EXISTING 1/4" X 1-1/4" COPPER GROUND BUS MOUNTED 457mm AFF, TO REMAIN.
8. EXISTING CONNECTION TO GROUND ROD, TYPICAL 4 COUNERS OF ROOM, TO REMAIN.
9. EXISTING STORAGE CABINETS TO REMAIN.
10. EXISTING MANUAL MOTOR STARTER FOR '120V FAN H17-E2' TO BE REMOVED. SUPPLY AND INSTALL NEW MOTOR STARTER TO MATCH EXISTING, EXTEND WIRE AND CONDUIT AS REQUIRED TO ACCOMMODATE NEW INSTALLATION. PROVIDE LAMACOID LABEL.
11. EXISTING 30A, 3P, 240V FUSED (@ 15A) DISCONNECT SWITCH FOR '120V ELEVATOR H-17 CATHODIC PROTECTION' TO BE REMOVED. SUPPLY AND INSTALL NEW DISCONNECT TO MATCH EXISTING, EXTEND WIRE AND CONDUIT AS REQUIRED TO ACCOMMODATE NEW INSTALLATION. PROVIDE NEW LAMACOID LABEL.
12. EXISTING 30A, 3P, 240V FUSED (@ 15A) DISCONNECT SWITCH FOR '120V ELEVATOR CAB LIGHTING' TO BE REMOVED. SUPPLY AND INSTALL NEW DISCONNECT TO MATCH EXISTING, EXTEND WIRE AND CONDUIT AS REQUIRED TO ACCOMMODATE NEW INSTALLATION. PROVIDE NEW LAMACOID LABEL.
13. EXISTING 100A, 3P, 600V FUSED (@ 70A) DISCONNECT SWITCH FOR '600V H-17 ELEVATOR' TO BE REMOVED. SUPPLY AND INSTALL NEW DISCONNECT TO MATCH EXISTING, EXTEND WIRE AND CONDUIT AS REQUIRED TO ACCOMMODATE NEW INSTALLATION. PROVIDE NEW LAMACOID LABEL.
14. EXISTING MECHANICAL DUCTWORK, TO REMAIN.
15. EXISTING DUPLEX RECEPTACLES TO BE RELOCATED TO ACCOMMODATE NEW EQUIPMENT INSTALLATION. EXTEND WIRE AND CONDUIT AS REQUIRED.
16. EXISTING 200A, 208V SPLITTER TO BE REMOVED AND REPLACED WITH NEW. LENGTH TO MATCH EXISTING. RECONNECT ALL EXISTING FEEDERS.
17. EXISTING 2 CIRCUIT LOAD CENTRE WITH 2x 15A,1P BREAKERS, TO BE REMOVED. SUPPLY AND INSTALL NEW PANELBOARD TO REPLACE EXISTING, EXTEND WIRE AND CONDUIT AS REQUIRED TO ACCOMMODATE NEW INSTALLATION. PROVIDE NEW LAMACOID LABEL AND TYPEWRITTEN SCHEDULE.
18. EXISTING 60A, 208V 3P FUSED (AT 50A) DISCONNECT SWITCH FOR PANEL J162EA, TO BE REMOVED. SUPPLY AND INSTALL NEW FUSED DISCONNECT SWITCH TO MATCH EXISTING, EXTEND WIRE AND CONDUIT AS REQUIRED TO ACCOMMODATE NEW INSTALLATION. PROVIDE NEW LAMACOID LABEL.
19. EXISTING 4 CIRCUIT LOAD CENTRE WITH 4x 15A,1P BREAKERS FOR FIRE ALARM SYSTEM, TO BE REMOVED. SUPPLY AND INSTALL NEW PANELBOARD TO REPLACE EXISTING, EXTEND WIRE AND CONDUIT AS REQUIRED TO ACCOMMODATE NEW INSTALLATION. PROVIDE NEW LAMACOID LABEL AND TYPEWRITTEN SCHEDULE, PAINT RED AND LOCK-ONS AS REQUIRED.
20. EXISTING 100A, 208V 3P FUSED (AT 70A) DISCONNECT SWITCH FOR PANEL J181EA, TO BE REMOVED. SUPPLY AND INSTALL NEW FUSED DISCONNECT SWITCH TO MATCH EXISTING, EXTEND WIRE AND CONDUIT AS REQUIRED TO ACCOMMODATE NEW INSTALLATION. PROVIDE NEW LAMACOID LABEL.
21. EXISTING 60A, 208V 3P FUSED (AT 60A) DISCONNECT SWITCH FOR PANEL G181EA, TO BE REMOVED. SUPPLY AND INSTALL NEW FUSED DISCONNECT SWITCH TO MATCH EXISTING, EXTEND WIRE AND CONDUIT AS REQUIRED TO ACCOMMODATE NEW INSTALLATION. PROVIDE NEW LAMACOID LABEL.
22. EXISTING 30A, 208V FUSED (AT 15A) DISCONNECT SWITCH FOR POWER METER CELL 1, TO BE REMOVED. SUPPLY AND INSTALL NEW FUSED DISCONNECT SWITCH TO MATCH EXISTING, EXTEND WIRE AND CONDUIT AS REQUIRED TO ACCOMMODATE NEW INSTALLATION. PROVIDE NEW LAMACOID LABEL.

EXISTING SUBSTATION NO. 2 (H17) FLOOR PLAN
1 / E102
SCALE : 1:75

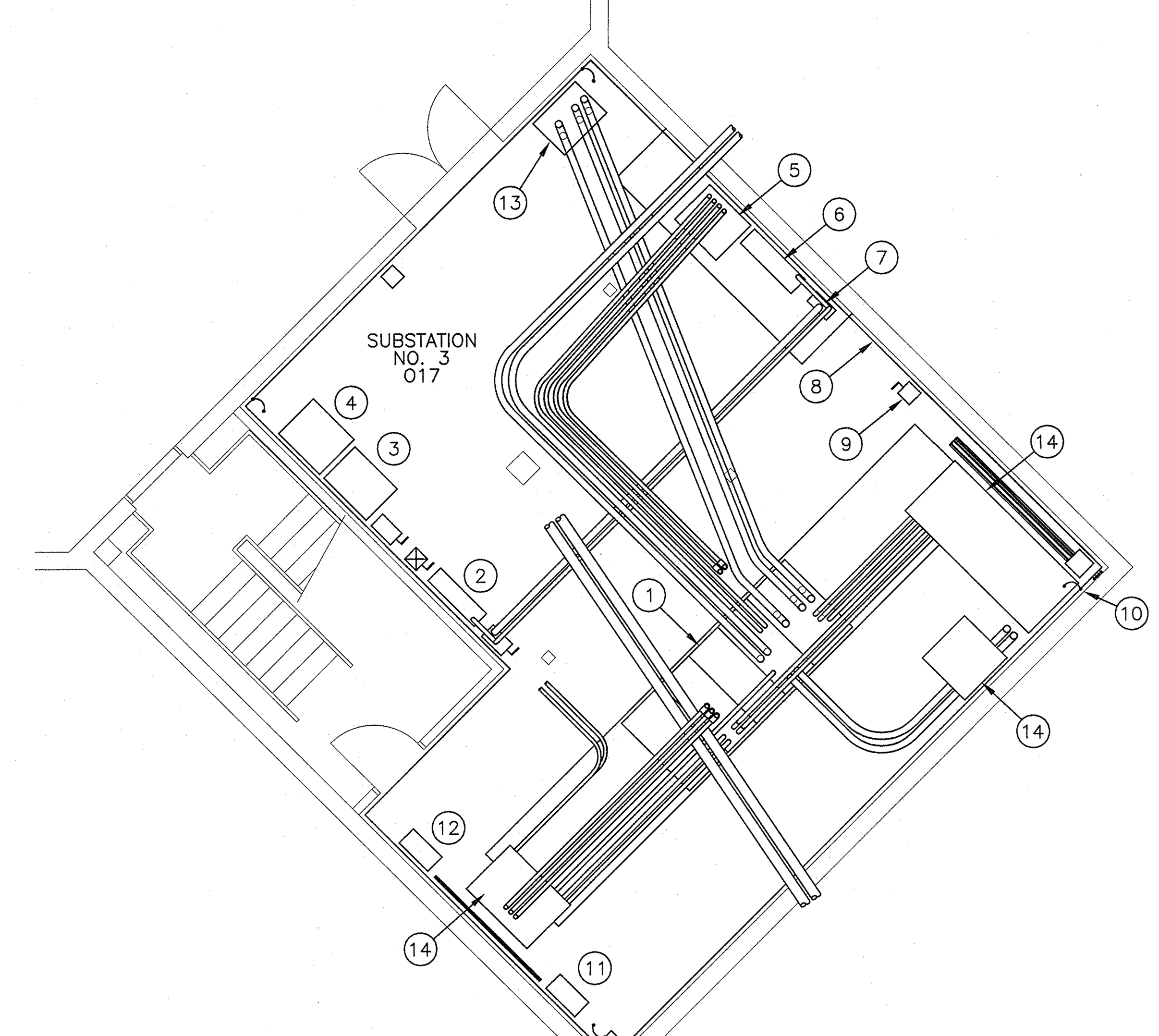

1. EXISTING 347/600V, 5 SECTION LOW VOLTAGE DISTRIBUTION BOARD, TO BE REMOVED.
2. EXISTING PANEL O171EPA, 347/600V, TO REMAIN.
3. EXISTING JUNCTION BOX, TO REMAIN.
4. EXISTING TRANSFER SWITCH O17 NO. 3, LOOP 3, 347/600V, TO REMAIN.
5. EXISTING TRANSFER SWITCH NO. 5, LOOP 5, 347/600V, TO REMAIN.
6. EXISTING PANEL O17EPB, 347/600V, TO REMAIN.
7. CONTACTOR 'C1' P162EPA, 600/347V, 3PH, 4W, TO REMAIN.
8. EXISTING 1/4" X 1-1/4" COPPER GROUND BUS MOUNTED 457mm AFF, TO REMAIN.
9. EXISTING 30A DISCONNECT SWITCH, TO REMAIN.
10. EXISTING CONNECTION TO GROUND ROD, TYPICAL 4 COUNERS OF ROOM, TO REMAIN.
11. EXISTING SALTWATER PUMPS MONITORING PANEL, TO REMAIN.
12. EXISTING HONEYWELL CABINET, TO REMAIN.
13. EXISTING PULL BOX C/W STEEL BARRIER BETWEEN MAIN FEEDER AND TIE FEEDER CONDUCTORS, TO REMAIN.
14. EXISTING CEILING MOUNTED JUNCTION BOX, TO REMAIN. MODIFIY AS REQUIRED TO ACCOMMODATE RE-ROUTING OF CONDUITS/WIRES.

EXISTING SUBSTATION NO. 3 (O17) FLOOR PLAN
2 / E102
SCALE : 1:75

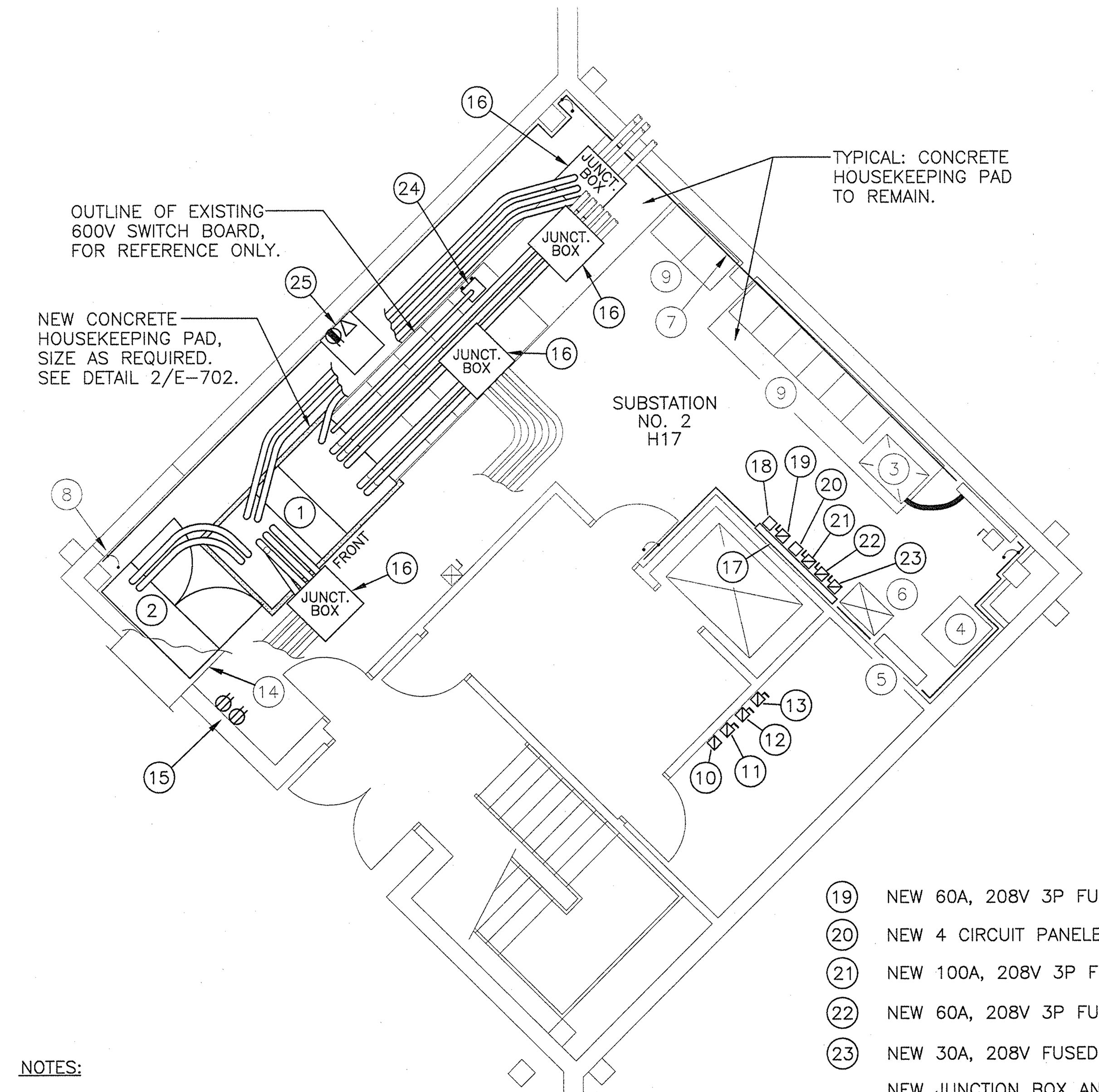

1. NEW 347/600V, 5 SECTION LOW VOLTAGE DISTRIBUTION BOARD. SEE RISER DIAGRAM FOR DETAILS.
2. EXISTING 300KVAR CAPACITOR, 347/600V, 3PH, 4W, NEW LOCATION. MODIFY EXISTING WIRE AND CONDUIT TO ACCOMODATE NEW LOCATION, EXTEND AS REQUIRED.
3. EXISTING 75KVA TRANSFORMER H171ET2, 600V:120/208V.
4. EXISTING TRANSFER SWITCH H17 NO. 2, LOOP 2, 347/600V.
5. EXISTING EMERGENCY DISTRIBUTION PANEL H171EA, 347/600V.
6. EXISTING 45KVA TRANSFORMER H171ET1, 600V:120/208V.
7. EXISTING 1/4" X 1-1/4" COPPER GROUND BUS MOUNTED 457mm AFF.
8. EXISTING CONNECTION TO GROUND ROD, TYPICAL 4 CORNERS OF ROOM.
9. EXISTING STORAGE CABINETS TO REMAIN.
10. NEW MANUAL MOTOR STARTER FOR '120V FAN H17-E2'.
11. NEW 30A, 3P, 240V FUSED (@ 15A) DISCONNECT SWITCH FOR '120V ELEVATOR H-17 CATHODIC PROTECTION'.
12. NEW 30A, 3P, 240V FUSED (@ 15A) DISCONNECT SWITCH FOR '120V ELEVATOR CAB LIGHTING'.
13. NEW 100A, 3P, 600V FUSED (@ 70A) DISCONNECT SWITCH FOR '600V H-17 ELEVATOR'.
14. EXISTING MECHANICAL DUCTWORK, SHOWN BROKEN FOR CLARITY.
15. DUPLEX RECEPTACLES NEW LOCATION, EXACT LOCATION TO BE CONFIRMED ON SITE.
16. NEW JUNCTION BOX (SIZE AS REQUIRED BY CEC), FOR FEEDER EXTENSION AS INDICATED. SEE TYPICAL JUNCTION BOX DETAIL 1/E702.
17. NEW 200A, 208V SPLITTER.
18. NEW 2 CIRCUIT PANELBOARD WITH 2x 15A,1P BREAKERS, 18kAIC.
19. NEW 60A, 208V 3P FUSED (AT 50A) DISCONNECT SWITCH FOR PANEL J162EA.
20. NEW 4 CIRCUIT PANELBOARD WITH 4x 15A,1P BREAKERS FOR FIRE ALARM SYSTEM, 18kAIC.
21. NEW 100A, 208V 3P FUSED (AT 70A) DISCONNECT SWITCH FOR PANEL J181EA
22. NEW 60A, 208V 3P FUSED (AT 60A) DISCONNECT SWITCH FOR PANEL G181EA.
23. NEW 30A, 208V FUSED (AT 15A) DISCONNECT SWITCH FOR POWER METER CELL 1.
24. NEW JUNCTION BOX AND UNISTRUT SUPPORT FRAME FROM FLOOR TO CEILING. EXISTING CONDUIT FED UP THROUGH FLOOR, EXTEND WIRE AND CONDUIT AS REQUIRED. UNITSTRUT SUPPORT FRAME TO BE MECHANICALLY FASTENED TO FLOOR/CEILING AND COMPLETE WITH ALL UNISTRUT, FLOOR PLATES, ANCHORS, SPRING NUTS, BOLTS. CONTRACTOR TO CONFIRM ON SITE, EXACT QUANTITY OF FEEDERS FED UP THROUGH FLOOR.
25. NEW WALL MOUNTED NETWORK SWITCH FOR METERING. SEE METERING SCHEMATIC 5/E-705. PROVIDE CAT 6 DATA DROP AND 120V RECEPTACLE. EXACT LOCATION OF RACK, DATA DROP AND RECEPTACLE TO BE CONFIRMED ON SITE. NEW RECEPTACLE TO BE CONNECT TO EXISTING EMERGENCY POWER RECEPTACLE CIRCUIT WITHIN ELECTRICAL ROOM, DO NOT EXCEED 80% LOADING ON EXISTING CIRCUIT, TEST CIRCUIT LOAD PRIOR TO CONNECTION.

NOTES:

1. SHADING INDICATES EXISTING TO REMAIN, UNLESS OTHERWISE NOTED.
2. CONDUIT/FEEDER LOCATION AND QUANTITIES SHOWN FOR REFERENCE ONLY. CONTRACTOR TO VERIFY AND ADJUST ACCORDINGLY. SEE RESER DIAGRAM FOR FEEDERS TO BE EXTENDED AND CONNECTED TO NEW SWITCHGEAR.

REVISED SUBSTATION NO. 2 (H17) FLOOR PLAN
3 / E102
SCALE : 1:75

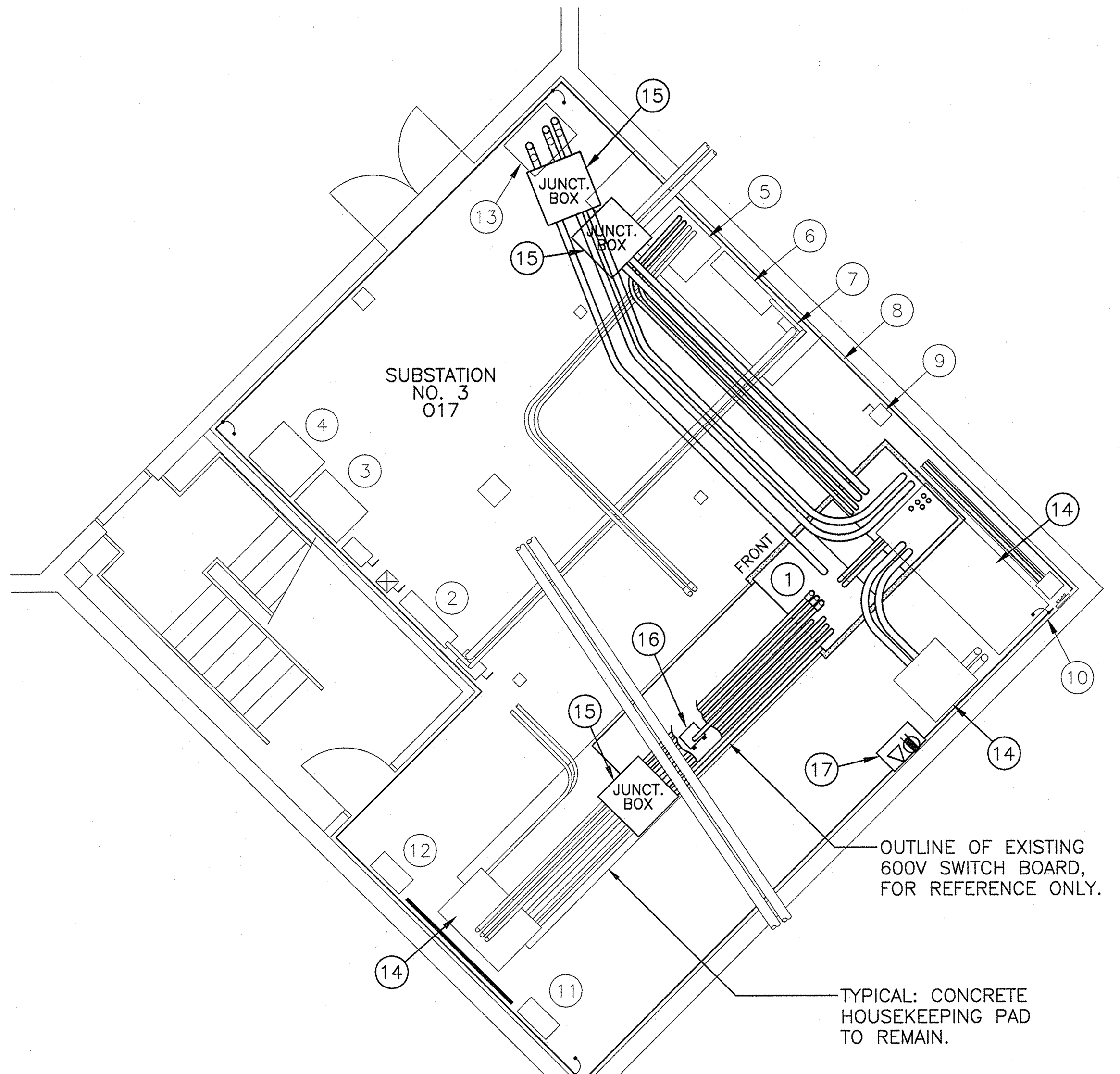

1. NEW 347/600V, 5 SECTION LOW VOLTAGE DISTRIBUTION BOARD. SEE RISER DIAGRAM FOR DETAILS.
2. EXISTING PANEL O171EPA, 347/600V.
3. EXISTING JUNCTION BOX.
4. EXISTING TRANSFER SWITCH O17 NO. 3, LOOP 3, 347/600V.
5. EXISTING TRANSFER SWITCH NO. 5, LOOP 5, 347/600V.
6. EXISTING PANEL O17EPB, 347/600V.
7. CONTACTOR 'C1' P162EPA, 600/347V, 3PH, 4W.
8. EXISTING 1/4" X 1-1/4" COPPER GROUND BUS MOUNTED 457mm AFF.
9. EXISTING 30A DISCONNECT SWITCH.
10. EXISTING CONNECTION TO GROUND ROD, TYPICAL 4 CORNERS OF ROOM.
11. EXISTING SALTWATER PUMPS MONITORING PANEL.
12. EXISTING HONEYWELL CABINET.
13. EXISTING PULL BOX C/W STEEL BARRIER BETWEEN MAIN FEEDER AND TIE FEEDER CONDUCTORS.
14. EXISTING CEILING MOUNTED JUNCTION BOX.
15. NEW JUNCTION BOX (SIZE AS REQUIRED BY CEC), FOR FEEDER EXTENSION AS INDICATED. SEE TYPICAL JUNCTION BOX DETAIL 1/E702.
16. NEW JUNCTION BOX AND UNISTRUT SUPPORT FRAME FROM FLOOR TO CEILING. EXISTING CONDUIT FED UP THROUGH FLOOR, EXTEND WIRE AND CONDUIT AS REQUIRED. UNITSTRUT SUPPORT FRAME TO BE MECHANICALLY FASTENED TO FLOOR/CEILING AND COMPLETE WITH ALL UNISTRUT, FLOOR PLATES, ANCHORS, SPRING NUTS, BOLTS.
17. NEW WALL MOUNTED NETWORK SWITCH FOR METERING. SEE METERING SCHEMATIC 5/E-705. PROVIDE CAT 6 DATA DROP AND 120V RECEPTACLE. EXACT LOCATION OF RACK, DATA DROP AND RECEPTACLE TO BE CONFIRMED ON SITE. NEW RECEPTACLE TO BE CONNECT TO EXISTING EMERGENCY POWER RECEPTACLE CIRCUIT WITHIN ELECTRICAL ROOM, DO NOT EXCEED 80% LOADING ON EXISTING CIRCUIT, TEST CIRCUIT LOAD PRIOR TO CONNECTION.

NOTES:

1. SHADING INDICATES EXISTING TO REMAIN, UNLESS OTHERWISE NOTED. EQUIPMENT/DEVICES SHOWN FOR REFERTENCE ONLY.
2. CONDUIT/FEEDER LOCATION AND QUANTITIES SHOWN FOR REFERENCE ONLY. CONTRACTOR TO VERIFY AND ADJUST ACCORDINGLY.

REVISED SUBSTATION NO. 3 (O17) FLOOR PLAN
4 / E102
SCALE : 1:75

Public Works and Government Services Canada / Travaux Publics et Services gouvernementaux Canada

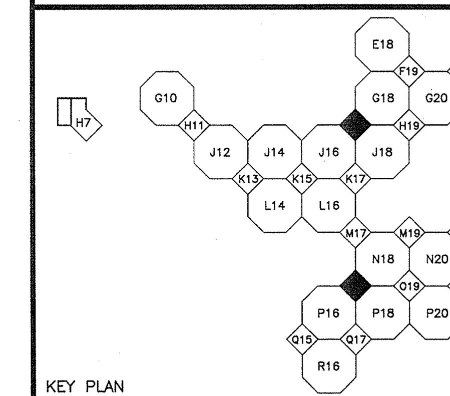

PROFESSIONAL ENGINEER — BERNIE ROPSON — 2016.08.26 — REGISTERED NEWFOUNDLAND & LABRADOR

PROVINCE OF NEWFOUNDLAND AND LABRADOR
pegnl ENGINEERING PERMIT J0291
STANTEC CONSULTING LTD.
BR 04642
Signature or Member Number (Member-in-Responsible Charge)

revisions		date
0	ISSUED FOR TENDER	AUG 26 2016

project / projet: NORTHWEST ATLANTIC FISHERIES CENTRE MAIN ELECTRICAL UPGRADES

drawing / dessin: PARTIAL FLOOR PLANS SUBSTATIONS NO. 2 (H17) & NO. 3 (O17)

designed / conçu: B.Ropson — date March 2016
drawn / dessiné: J. Dillon — date March 2016
approved / approuvé
Tender / Soumission: Sandy Oke 2016-09-12
PWGSC Project Manager / Administrateur de projets TPSGC
project number / no. du projet: R.072210.001
drawing no. / no. du dessin: E102

E-DRM/GDD-E: 543115

PWGSC B1 (2004)