Public Works and Government Services Canada | Travaux publics et Services gouvernementaux Canada

RETURN BIDS TO:
RETOURNER LES SOUMISSIONS À:

Bid Receiving - PWGSC / Réception des soumissions - TPSGC
11 Laurier St. / 11, rue Laurier
Place du Portage, Phase III
Core 0B2 / Noyau 0B2
Gatineau, Québec K1A 0S5
Bid Fax: (819) 997-9776

REQUEST FOR PROPOSAL
DEMANDE DE PROPOSITION

Proposal To: Public Works and Government Services Canada

We hereby offer to sell to Her Majesty the Queen in right of Canada, in accordance with the terms and conditions set out herein, referred to herein or attached hereto, the goods, services, and construction listed herein and on any attached sheets at the price(s) set out therefor.

Proposition aux: Travaux Publics et Services Gouvernementaux Canada

Nous offrons par la présente de vendre à Sa Majesté la Reine du chef du Canada, aux conditions énoncées ou incluses par référence dans la présente et aux annexes ci-jointes, les biens, services et construction énumérés ici sur toute feuille ci-annexée, au(x) prix indiqué(s).

Comments - Commentaires

Title - Sujet
CUSTOM ENCLOSURE KITS

Solicitation No. - N° de l'invitation	**Date**
23240-170493/A	2016-10-03

Client Reference No. - N° de référence du client
23240-170493

GETS Reference No. - N° de référence de SEAG
PW-$$HL-420-71659

File No. - N° de dossier	**CCC No./N° CCC - FMS No./N° VME**
hl420.23240-170493	

Solicitation Closes - L'invitation prend fin
at - à 02:00 PM
on - le 2016-11-14

Time Zone
Fuseau horaire
Eastern Standard Time
EST

F.O.B. - F.A.B.
Plant-Usine: ☐ **Destination:** ☑ **Other-Autre:** ☐

Address Enquiries to: - Adresser toutes questions à:	**Buyer Id - Id de l'acheteur**
Dumm, Jennifer	hl420

Telephone No. - N° de téléphone	**FAX No. - N° de FAX**
(819) 956-9675 ( )	( ) -

Destination - of Goods, Services, and Construction:
Destination - des biens, services et construction:

Specified Herein
Précisé dans les présentes

Instructions: See Herein

Instructions: Voir aux présentes

Vendor/Firm Name and Address
Raison sociale et adresse du fournisseur/de l'entrepreneur

Delivery Required - Livraison exigée	**Delivery Offered - Livraison proposée**
See Herein	

Vendor/Firm Name and Address
Raison sociale et adresse du fournisseur/de l'entrepreneur

Telephone No. - N° de téléphone
Facsimile No. - N° de télécopieur

Name and title of person authorized to sign on behalf of Vendor/Firm (type or print)
Nom et titre de la personne autorisée à signer au nom du fournisseur/ de l'entrepreneur (taper ou écrire en caractères d'imprimerie)

Signature **Date**

Issuing Office - Bureau de distribution
Fuel & Construction Products Division
11 Laurier St./11, rue Laurier
7A2, Place du Portage, Phase III
Gatineau, Québec K1A 0S5

Canada

TABLE OF CONTENTS

PART 1 - GENERAL INFORMATION

1.1 Requirement - Bid

The requirement is detailed under Article 6.2 of the resulting contract clauses.

1.2 Debriefings

Bidders may request a debriefing on the results of the bid solicitation process. Bidders should make the request to the Contracting Authority within 15 working days from receipt of the results of the bid solicitation process. The debriefing may be in writing, by telephone or in person.

1.3 Trade Agreements

The requirement is subject to the provisions of the World Trade Organization Agreement of Government Procurement (WTO-AGP), the North American Free Trade Agreement (NAFTA), and the Agreement on Internal Trade (AIT).

1.4 Optional Prototype Viewing

It is recommended that the Bidder or a representative of the Bidder visit Natural Resources Canada (NRCan). Arrangements have been made for the prototype viewing to be held at NRCan's facility located at 2617 Anderson Road, Ottawa, ON, on 21 October 2016. The prototype viewing will begin at 10:00 a.m. EDT.

Bidders are requested to communicate with the Contracting Authority no later than 15:00 EDT on 20 October 2016, to confirm attendance and provide the name(s) of the person(s) who will attend. Bidders may be requested to sign an attendance sheet. Bidders who do not attend or do not send a representative will not be given an alternative appointment, but they will not be precluded from submitting a bid. Any clarifications or changes to the bid solicitation resulting from the prototype viewing will be included as an amendment to the bid solicitation.

PART 2 - BIDDER INSTRUCTIONS

2.1 Standard Instructions, Clauses and Conditions

All instructions, clauses and conditions identified in the bid solicitation by number, date and title are set out in the *Standard Acquisition Clauses and Conditions Manual* (https://buyandsell.gc.ca/policy-and-guidelines/standard-acquisition-clauses-and-conditions-manual) issued by Public Works and Government Services Canada.

Bidders who submit a bid agree to be bound by the instructions, clauses and conditions of the bid solicitation and accept the clauses and conditions of the resulting contract.

The 2003 (2016-04-04) Standard Instructions - Goods or Services - Competitive Requirements, are incorporated by reference into and form part of the bid solicitation.

Subsection 5.4 of 2003, Standard Instructions - Goods or Services - Competitive Requirements, is amended as follows:

Delete: 60 days
Insert: 90 days

2.2 SACC Manual Clauses

The following terms and conditions are incorporated herein

SACC Reference	Section	Date
B1000T	Condition of Material - Bid	2014-06-26

2.2.1 Units of Issue

SUPPLIERS ARE TO PAY PARTICULAR ATTENTION TO THE UNITS OF ISSUE SPECIFIED. IF QUOTING OTHER THAN SPECIFIED PLEASE INDICATE THE UNIT OF ISSUE YOU ARE QUOTING ON.

2.3 Submission of Bids

Bids must be submitted only to Public Works and Government Services Canada (PWGSC) Bid Receiving Unit by the date, time and place indicated on page 1 of the bid solicitation.

2.4 Enquiries - Bid Solicitation

All enquiries must be submitted in writing to the Contracting Authority no later than seven (7) calendar days before the bid closing date. Enquiries received after that time may not be answered.

Bidders should reference as accurately as possible the numbered item of the bid solicitation to which the enquiry relates. Care should be taken by Bidders to explain each question in sufficient detail in order to enable Canada to provide an accurate answer. Technical enquiries that are of a proprietary nature must be clearly marked "proprietary" at each relevant item. Items identified as "proprietary" will be treated as such except where Canada determines that the enquiry is not of a proprietary nature. Canada may edit the question(s) or may request that the Bidder do so, so that the proprietary nature of the question(s) is eliminated, and the enquiry can be answered to all Bidders. Enquiries not submitted in a form that can be distributed to all Bidders may not be answered by Canada.

2.5 Applicable Laws

Any resulting contract must be interpreted and governed, and the relations between the parties determined, by the laws in force in Ontario.

Bidders may, at their discretion, substitute the applicable laws of a Canadian province or territory of their choice without affecting the validity of their bid, by deleting the name of the Canadian province or territory specified and inserting the name of the Canadian province or territory of their

choice. If no change is made, it acknowledges that the applicable laws specified are acceptable to the Bidders.

2.6 Pre-production Samples

After contract award, the successful Bidder will be required to provide one (1) pre-production sample for items 1 and 5 to the Technical Authority for acceptance within _____ *(bidder must insert the number of days)* calendar days from contract award.

If the first sample(s) are rejected, the successful Bidder will be required to submit the second sample(s) within _____ *(bidder must insert the number of days)* calendar days of notification of rejection from the Technical Authority.

2.7 Best Delivery Date - Bid

While delivery of the firm quantities is requested by 31 March 2017, the best delivery that could be offered is _____. Partial deliveries will be accepted and are encouraged.

While delivery of the option quantities are required within 60 days after issuance of Contract amendment exercising the option, the best delivery that could be offered for the option quantities is _____.

2.8 Contractor's Representative

Name and telephone number of the person responsible for:

	General Enquiries	**Delivery Follow-up**
Name:	_____	_____
Telephone No.:	_____	_____
Facsimile No.:	_____	_____
E-mail address:	_____	_____

PART 3 - BID PREPARATION INSTRUCTIONS

3.1 Bid Preparation Instructions

Canada requests that Bidders follow the format instructions described below in the preparation of their bid:

(a) use 8.5 x 11 inch (216 mm x 279 mm) paper;
(b) use a numbering system that corresponds to the bid solicitation.

In April 2006, Canada issued a policy directing federal departments and agencies to take the necessary steps to incorporate environmental considerations into the procurement process Policy on Green Procurement (http://www.tpsgc-pwgsc.gc.ca/ecologisation-greening/achats-procurement/politique-policy-eng.html). To assist Canada in reaching its objectives, Bidders should:

1) use 8.5 x 11 inch (216 mm x 279 mm) paper containing fibre certified as originating from a sustainably-managed forest and containing minimum 30% recycled content; and
2) use an environmentally-preferable format including black and white printing instead of colour printing, printing double sided/duplex, using staples or clips instead of cerlox, duotangs or binders.

Section I: Technical Bid

In their technical bid, Bidders should explain and demonstrate how they propose to meet the requirements and how they will carry out the Work.

Section II: Financial Bid

Prices must only appear in the Pricing Table at Annex A. No prices must be indicated in any other section of the bid.

Bidders must submit their financial bid in accordance with the Basis of Payment. The total amount of Applicable Taxes must be shown separately.

3.1.1 Electronic Payment of Invoices – Bid

If you are willing to accept payment of invoices by Electronic Payment Instruments, complete the following to identify which cards will be accepted.

The Bidder accepts any of the following Electronic Payment Instrument(s):

( ) VISA Acquisition Card;
( ) MasterCard Acquisition Card;
( ) Direct Deposit (Domestic and International);
( ) Electronic Data Interchange (EDI);
( ) Wire Transfer (International Only);
( ) Large Value Transfer System (LVTS) (Over $25M)

If the above is not completed, it will be considered as if Electronic Payment Instruments are not being accepted for payment of invoices.

Acceptance of Electronic Payment Instruments will not be considered as an evaluation criterion.

3.1.2 Exchange Rate Fluctuation

The requirement does not offer exchange rate fluctuation risk mitigation. Requests for exchange rate fluctuation risk mitigation will not be considered. All bids including such provision will render the bid non-responsive.

3.1.3 Progress Payments/Advance Payments

Progress payments/advance payments will not be considered unless specifically offered by PWGSC in this document.

Section III: Certifications

Bidders must submit the certifications and additional information required under Part 5.

PART 4 - EVALUATION PROCEDURES AND BASIS OF SELECTION

4.1 Evaluation Procedures

(a) Bids will be assessed in accordance with the entire requirement of the bid solicitation including the technical and financial evaluation criteria.
(b) An evaluation team composed of representatives of Canada will evaluate the bids.

4.1.1 Technical Evaluation

All bids must be completed in full and provide all of the information requested in the bid solicitation to enable full and complete evaluation.

4.1.2 Financial Evaluation

4.1.2.1 Mandatory Financial Criteria

a) The Bidder must bid firm unit prices in Canadian funds, Applicable Taxes excluded, DDP Delivered Duty Paid to destination Incoterms 2000, Customs Duties included for each item offered; and
b) The Bidders' financial bid must be in accordance with the Basis of Payment.

4.2 Basis of Selection

A bid must comply with the requirements of the bid solicitation to be declared responsive. The responsive bid with the lowest evaluated price on an aggregate basis will be recommended for award of a contract.

The aggregate price will be calculated by adding the following:
a) The cost of each pre-production sample.
b) Total cost of each item. The total cost will be calculated by multiplying the quoted unit price for each item by the firm quantity.
c) Total cost of each item for the option quantity. This cost will be calculated by multiplying the quoted unit price by the maximum option quantity.

PART 5 – CERTIFICATIONS AND ADDITIONAL INFORMATION

Bidders must provide the required certifications and additional information to be awarded a contract.

The certifications provided by Bidders to Canada are subject to verification by Canada at all times. Unless specified otherwise, Canada will declare a bid non-responsive, or will declare a contractor in default if any certification made by the Bidder is found to be untrue whether made knowingly or unknowingly, during the bid evaluation period or during the contract period.

The Contracting Authority will have the right to ask for additional information to verify the Bidder's certifications. Failure to comply and to cooperate with any request or requirement imposed by the Contracting Authority will render the bid non-responsive or constitute a default under the Contract.

5.1 Certification Required with the Bid

Bidders must submit the following duly completed certifications as part of their bid.

5.1.1 Integrity Provisions - Declaration of Convicted Offences

In accordance with the Ineligibility and Suspension Policy (http://www.tpsgc-pwgsc.gc.ca/ci-if/politique-policy-eng.html), the Bidder must provide with its bid the required documentation, as applicable, to be given further consideration in the procurement process.

5.1.2 Additional Certifications required with the Bid

5.1.2.1 Product Certification

The Bidder certifies that all goods proposed conform to the drawings provided.

_____ _____
Signature Date

5.2 Certifications Precedent to Contract Award and Additional Information

The certifications and additional information listed below should be submitted with the bid, but may be submitted afterwards. If any of these required certifications or additional information is not completed and submitted as requested, the Contracting Authority will inform the Bidder of a time frame within which to provide the information. Failure to provide the certifications or the additional information listed below within the time frame provided will render the bid non-responsive.

5.2.1 Integrity Provisions – Required Documentation

In accordance with the Ineligibility and Suspension Policy (http://www.tpsgc-pwgsc.gc.ca/ci-if/politique-policy-eng.html), the Bidder must provide the required documentation, as applicable, to be given further consideration in the procurement process.

5.2.2 Federal Contractors Program for Employment Equity - Bid Certification

By submitting a bid, the Bidder certifies that the Bidder, and any of the Bidder's members if the Bidder is a Joint Venture, is not named on the Federal Contractors Program (FCP) for employment equity "FCP Limited Eligibility to Bid" list available at the bottom of the page of the Employment and Social Development Canada (ESDC) - Labour's website (http://www.esdc.gc.ca/en/jobs/workplace/human_rights/employment_equity/federal_contractor_program.page?&_ga=1.229006812.1158694905.1413548969).

Canada will have the right to declare a bid non-responsive if the Bidder, or any member of the Bidder if the Bidder is a Joint Venture, appears on the "FCP Limited Eligibility to Bid" list at the time of contract award.

5.2.3 Additional Certifications Precedent to Contract Award

5.2.3.1 General Environmental Criteria Certification

The Bidder must select and complete one of the following two certification statements.

A) The Bidder certifies that the Bidder is registered or meets ISO 14001.

_____ _____
Bidders' Authorized Representative Signature Date

or

B) The Bidder certifies that the Bidder meets and will continue to meet throughout the duration of the contract, a minimum of four (4) out of six (6) criteria identified in the table below.

The Bidder must indicate which four (4) criteria, as a minimum, are met.

Green Practices within the Bidders' organization	Insert a checkmark for each criterion that is met
Promotes a paperless environment through directives, procedures and/or programs	
All documents are printed double sided and in black and white for day to day business activity unless otherwise specified by your client	
Paper used for day to day business activity has a minimum of 30% recycled content and has a sustainable forestry management certification	
Utilizes environmentally preferable inks and purchase remanufactured ink cartridges or ink cartridges that can be returned to the manufacturer for reuse and recycling for day to day business activity.	
Recycling bins for paper, newsprint, plastic and aluminum containers available and emptied regularly in accordance with local recycling program.	
A minimum of 50% of office equipment has an energy efficient certification.	

_____ _____
Bidders' Authorized Representative Signature Date

PART 6 - RESULTING CONTRACT CLAUSES

The following clauses and conditions apply to and form part of any contract resulting from the bid solicitation.

6.1 Security Requirements

There is no security requirement applicable to the Contract.

6.2 Requirement - Contract

Natural Resources Canada (NRCan) requires the supply of custom enclosure kits as fully specified in the drawings at Annex B.

The Contractor must provide the custom enclosure kits in accordance to the attached drawings at Annex B.

6.2.1 Types of custom enclosure kits:

Items 1 to 4: Geophysical Station AC Kit Enclosure, described by NRCan Drawing Number 14339 Rev C and associated drawings and parts list specified therein.

Item 5: Geophysical Station DC Kit, described by NRCan Drawing Number 19039 Rev 3 and associated drawings and parts list specified therein.

The parts list included lists miscellaneous off-the-shelf parts utilized in the design and are cross referenced from drawing part numbers and descriptions to the manufacturer and its part number. Equivalent products for off-the-shelf parts, which meet the original manufacturer's specification, are acceptable.

Quantities are specified in Annex A – Pricing Table.

6.2.2 Pre-production Samples

1. The Contractor must provide one (1) pre-production sample for item 1 and item 5 to the Technical Authority for acceptance within _____ calendar days from contract award.
2. If the first sample(s) are rejected, the Contractor must submit the second sample(s) within _____ calendar days of notification of rejection from the Technical Authority.
3. The Contractor must carry out all required inspection and tests to verify conformance to the technical requirements of the Contract.
4. The Contractor must provide the sample(s), and a copy of the inspection and test report(s), to the Technical Authority, transportation charges prepaid, and without charge to Canada. The sample(s) submitted by the Contractor will remain the property of Canada.
5. The Contractor will be permitted to have a representative be present during the evaluation, or be available by telephone for questions. However, NRCan is not required to delay the testing if the Contractor representatives are unavailable. Any expenses associated with attendance at the testing will be at the sole responsibility of the Contractor.
6. The Technical Authority will notify the Contractor, in writing, of the conditional acceptance, acceptance or rejection of the sample(s). A copy of this notification will be provided by the Technical Authority to the Contracting Authority. The notice of conditional acceptance or acceptance does not relieve the Contractor from complying with all requirements of the specification(s) and all other conditions of the Contract.
7. The Contractor must not commence or continue with production of the items and must not make any deliveries until the Contractor has received notification from the Technical Authority that the sample(s) are acceptable. Any production of items before sample acceptance will be at the sole risk of the Contractor.

8. Rejection by the Technical Authority of the second sample(s) submitted by the Contractor for failing to meet the contract requirements, will be grounds for termination of the Contract for default.

6.2.2.1 Evaluation of the Pre-production Samples

Production can only start at the acceptance of the sample. Technical Authority will notify in writing of the acceptance or rejection.

Evaluation of the Pre-production Sample will be based on the following:

- Dimensional correctness of the prototype;
- Materials used are as specified;
- Overall workmanship – clean welds, no sharp edges, clean finish, correct assembly and fit.

6.2.3 Optional Goods

The Contractor grants to Canada the irrevocable option to acquire the goods, described at article 6.2 “Requirement – Contract” of the Contract under the same conditions and at the prices stated in the Contract. The option may only be exercised by the Contracting Authority and will be evidenced, for administrative purposes only, through a contract amendment. Option quantities are specified in Annex A – Pricing Table.

The Contracting Authority may exercise the option at any time before 31 March 2018 by sending a written notice to the Contractor.

6.3 Standard Clauses and Conditions

All clauses and conditions identified in the Contract by number, date and title are set out in the Standard Acquisition Clauses and Conditions Manual (https://buyandsell.gc.ca/policy-and-guidelines/standard-acquisition-clauses-and-conditions-manual) issued by Public Works and Government Services Canada.

6.3.1 General Conditions

2010A (2016-04-04) General Conditions - Goods (Medium Complexity), apply to and form part of the Contract.

6.4 Term of Contract

6.4.1 Period of the Contract

The period of the Contract is from date of Contract to 31 March 2018 inclusive.

6.4.2 Delivery Date

The Contractor must make the complete delivery of the firm quantities within _____calendar days from the effective date of the Contract. Partial deliveries will be accepted and are encouraged. Delivery of the firm quantity must be completed on or before 31 March 2017.

6.4.3 Delivery Date for Option Quantity

The Contractor must make the complete delivery of the option quantities within _____calendar days from the effective date of the Contract Amendment. Partial deliveries will be accepted and are encouraged.

6.4.4 Adherence to Delivery Schedule

The contractor will promptly give notice to the Contracting Authority of its inability to meet the contract delivery schedule and will request therein an extension of time stating its proposed revised delivery schedule and offering consideration for such revisions. Until such notice is received and the revised delivery schedule agreed to, the Minister may, pursuant to the General Conditions, on the business day following the due date of delivery of any outstanding materials, terminate the whole or part of the contract for default.

6.5 Authorities

6.5.1 Contracting Authority

The Contracting Authority for the Contract is:

Jennifer Dumm, Supply Specialist
Public Works and Government Services Canada
Acquisitions Branch, Commercial & Alternative Acquisitions Management Sector
Logistics, Electrical, Fuel & Transportation Directorate
Fuel & Construction Products Division (HL)
11 Laurier Street, 7A2, Place du Portage, Phase III
Gatineau, QC K1A 0S5
Telephone: 873-469-3349 Facsimile: 819-956-5227
E-mail address: Jennifer.Dumm@tpsgc-pwgsc.gc.ca

The Contracting Authority is responsible for the management of the Contract and any changes to the Contract must be authorized in writing by the Contracting Authority. The Contractor must not perform work in excess of or outside the scope of the Contract based on verbal or written requests or instructions from anybody other than the Contracting Authority.

6.5.2 Technical Authority

The Technical Authority for the Contract is:

Name: _____
Title: _____
Natural Resources Canada
Address: _____
Telephone: ___-___-____
Facsimile: ___-___-____
E-mail: _____

The Technical Authority named above is the representative of the department or agency for whom the Work is being carried out under the Contract and is responsible for all matters concerning the technical content of the Work under the Contract. Technical matters may be discussed with the Technical Authority, however the Technical Authority has no authority to authorize changes to the scope of the Work. Changes to the scope of the Work can only be made through a contract amendment issued by the Contracting Authority.

6.5.3 Contractor's Representative

Name and telephone number of the person responsible for:

	General Enquiries	Delivery Follow-up
Name:	_____	_____
Telephone No.:	_____	_____
Facsimile No.:	_____	_____
E-mail address:	_____	_____

6.6 Payment

6.6.1 Basis of Payment - Firm Unit Prices

In consideration of the Contractor satisfactorily completing all of its obligations under the Contract, the Contractor will be paid firm unit prices, DDP to destination, as specified in Annex A – Pricing Table, for a total cost of $ _____ CAD. Customs duties are included and Applicable Taxes are extra.

Canada will not pay the Contractor for any design changes, modifications or interpretations of the Work, unless they have been approved, in writing, by the Contracting Authority before their incorporation into the Work.

6.6.2 Terms of Payment

SACC Manual clause H1001C (2008-05-12) Multiple Payments

6.6.3 Electronic Payment of Invoices – Contract

The Contractor accepts to be paid using any of the following Electronic Payment Instrument(s):

a. Visa Acquisition Card;
b. MasterCard Acquisition Card;
c. Direct Deposit (Domestic and International);
d. Electronic Data Interchange (EDI);
e. Wire Transfer (International Only);
f. Large Value Transfer System (LVTS) (Over $25M)

6.7 Invoicing Instructions

The Contractor must submit invoices in accordance with the information required in Section 10 of 2010A, General Conditions - Goods (Medium Complexity). One (1) copy must be forwarded to the Contracting Authority identified under the section entitled "Authorities" of the Contract.

Use one of the following methods:

1) Facsimile: 1-877-947-0987
2) E-mail: NRCan.invoice_imaging-service_dimagerie_des_factures.NRCan@Canada.ca PDF format only.

6.8 Certifications and Additional Information - Compliance

Unless specified otherwise, the continuous compliance with the certifications provided by the Contractor in its bid or precedent to contract award, and the ongoing cooperation in providing additional information are conditions of the Contract and failure to comply will constitute the Contractor in default. Certifications are subject to verification by Canada during the entire period of the Contract.

6.9 Applicable Laws

The Contract must be interpreted and governed, and the relations between the parties determined, by the laws in force in _____.

6.10 Priority of Documents

If there is a discrepancy between the wording of any documents that appear on the list, the wording of the document that first appears on the list has priority over the wording of any document that subsequently appears on the list.

(a) the Articles of Agreement;
(b) the General Conditions 2010A (2016-04-04) Goods (Medium Complexity);
(c) Annex A - Pricing Table;
(d) Annex B - Drawings; and
(e) the Contractor's bid dated _____, as clarified on _____ or, as amended on_____.

6.11 SACC Manual Clauses

The following terms and conditions are incorporated herein

SACC Reference	Section	Date
B7500C	Excess Goods	2006-06-16
G1005C	Insurance – No Specific Requirement	2016-01-28

6.12 Inspection and Acceptance

The Technical Authority is the Inspection Authority. All reports, deliverable items, documents, goods and all services rendered under the Contract are subject to inspection by the Inspection Authority or representative. Should any report, document, good or service not be in accordance with the requirements of the Statement of Work and to the satisfaction of the Inspection Authority,

as submitted, the Inspection Authority will have the right to reject it or require its correction at the sole expense of the Contractor before recommending payment.

6.13 Shipping Instructions - Delivery at Destination

1. Goods must be consigned to the destination specified in the Contract and delivered DDP Delivered Duty Paid to Natural Resources Canada, 2617 Anderson Road, Ottawa Ontario Incoterms 2000 for shipments from commercial contractor.
2. The Contractor is responsible for all delivery charges, administration, costs and risk of transport and customs clearance, including the payment of customs duties and applicable taxes.

ANNEX A

PRICING TABLE

Destination for all items:
Natural Resources Canada, 2617 Anderson Road, Ottawa Ontario

Item 1: Geophysical Station AC Kit Enclosure, described by NRCan Drawing Number 14339 Rev C and associated drawings and parts list specified therein.

Item	Quantity	Price per unit, DDP to destination, applicable taxes excluded
***Pre-Production Sample**	1	$_____
Firm Quantity	29	$_____
****Option quantity** (5 minimum up to a maximum of 20)	5	$_____

Item 2: Geophysical Station AC Kit Enclosure, described by NRCan Drawing Number 14339 Rev C and associated drawings and parts list specified therein, excluding the "Battery Box Assembly" part 14340.

Item	Quantity	Price per unit, DDP to destination, applicable taxes excluded
Firm Quantity	14	$_____
****Option quantity** (5 minimum up to a maximum of 20)	5	$_____

Item 3: Instrument Box Assembly, described by NRCan Drawing Number 19211 and associated drawings and parts list specified therein.

Item	Quantity	Price per unit, DDP to destination, applicable taxes excluded
Firm Quantity	5	$_____
****Option quantity** (5 minimum up to a maximum of 10)	5	$_____

Item 4: Sun Shade, Post Mounting Box, described by NRCan Drawing Number 19216 and associated drawings and parts list specified therein.

Item	Quantity	Price per unit, DDP to destination, applicable taxes excluded
Firm Quantity	5	$_____
****Option quantity** (5 minimum up to a maximum of 10)	5	$_____

Item 5: Geophysical Station DC Kit, described by Drawing Number 19039 Rev 3 and associated drawings and parts list specified therein.

Item	Quantity	Price per unit, DDP to destination, applicable taxes excluded
***Pre-Production Sample**	1	$_____
Firm Quantity	15	$_____
****Option quantity** (5 minimum up to a maximum of 20)	5	$_____

*** Unit price must include all modifications required for acceptance of the sample.**

**** To be ordered in lots of 5 units minimum.**

ANNEX B

DRAWINGS AND PART LISTS

The following are the drawings for the custom enclosure kits:

Items 1 to 4 - Geophysical Station AC Kit Enclosure:

Channel, Conduit Strain Relief 14328
Battery Box Assembly, Post Mnt 14340
Box, Post Mnt, Sealed 14343
Battery Tray, Panel Mnt 14345
Heatsink, Fan 14347
Hasp, Padlock 14350
Mntg Angles, Post, Al 14523
Foundation Hdwr, Ac Kit 14541
Harness Ac Kit, Geophysical Station 14550
Hasp, Padlock With Bolt 18665
Antenna Mount 19058
Box, Post Mnt, Sealed 19212
Insulation, Rigid Foam 19215

Geophysical Station Ac Kit Enclosure 14339
Post, Welded 14342
Inner Panel, Battery Box 14344
Brkt, Battery Tb, W Pems 14346
Tray, Instrument 14349
Insulation, Ridgid Foam 14450
Sun Shade, Post Mnt Box 14524
Form, 3/4" Plywood 14542
Gasket 14634
Conduit / Cover Plate 19045
Post Mnt, Instrument Box Assembly 19211
Inner Panel, Instrument Box 19213
Sun Shade, Post Mnt Box 19216

Item 5 - Geophysical Station DC Kit:

DC Kit Drwg 19039
Din Rail Drwg 19035
Battery Box, Body Assy Drwg 19041
End Panel, Battery Box Drwg 19043
Conduit, Cover Plate Drwg 19045
Plywood, Battery Box Drwg 19047
Vertical Post, W/PEMS Drwg 19049
Base Chanel W/PEMS Drwg 19051
Brace, Solar Panel Drwg 19053
Nut Bar Drwg 19055
Cross Brace Drwg 19057
JB Box Support Brkt Drwg 19059
JB Box, Modified W/Holes Drwg 19061
Control Panel, Populated Drwg 19063
Label, Polarity Drwg 19065

Battery Box Assy Drwg 19040
Battery Box, Body Drwg 19042
Battery Box, Lid Drwg 19044
Insulation Drwg 19046
Solar Panel Structure, Assy Drwg 19048
Vertical Post, W/PEMS & Slot Drwg 19050
Battery Support Angle Drwg 19052
Mntg Plate, Solar Panel W/PEMS Drwg 19054
Brace Drwg 19056
Antenna Mount Drwg 19058
Locking Bar Drwg 19060
Long Brace Drwg 19062
Control Panel, W/HDWR Drwg 19064
Harness, DC Kit Drwg 19066

The following are the parts lists for the custom enclosure kits:

14339 – Geophysical Station AC Enclosure
19039 – Geophysical Station, DC Kit

TITLE	DRAWING NUMBER	REV.
GEOPHYSICAL STATION AC KIT ENCLOSURE	14339	C
		SHT. 1/2

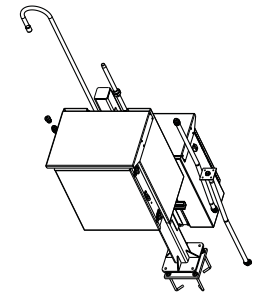

SCALE 0.020

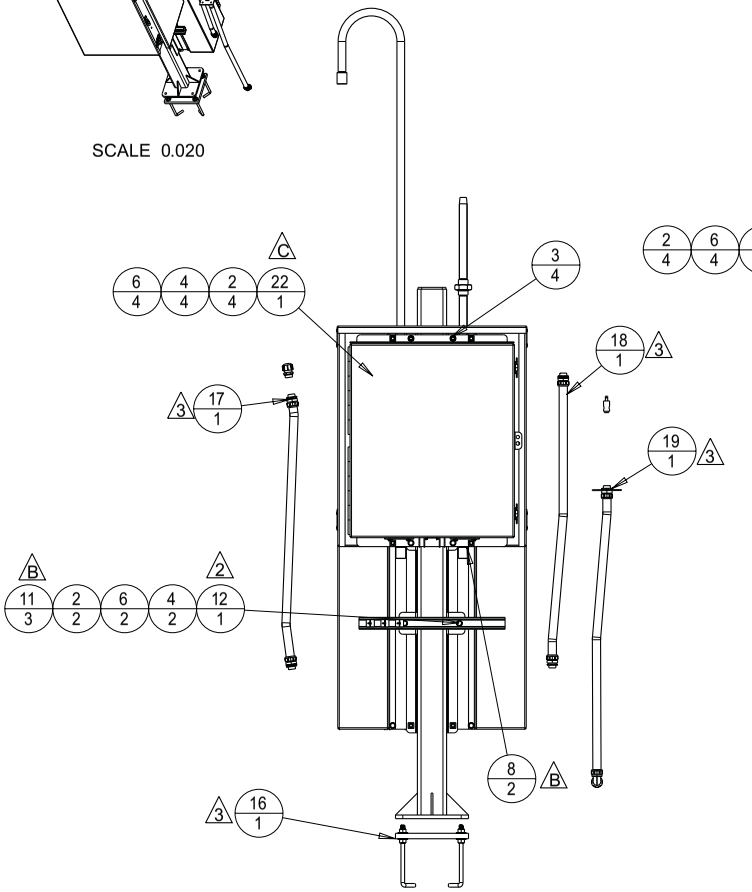

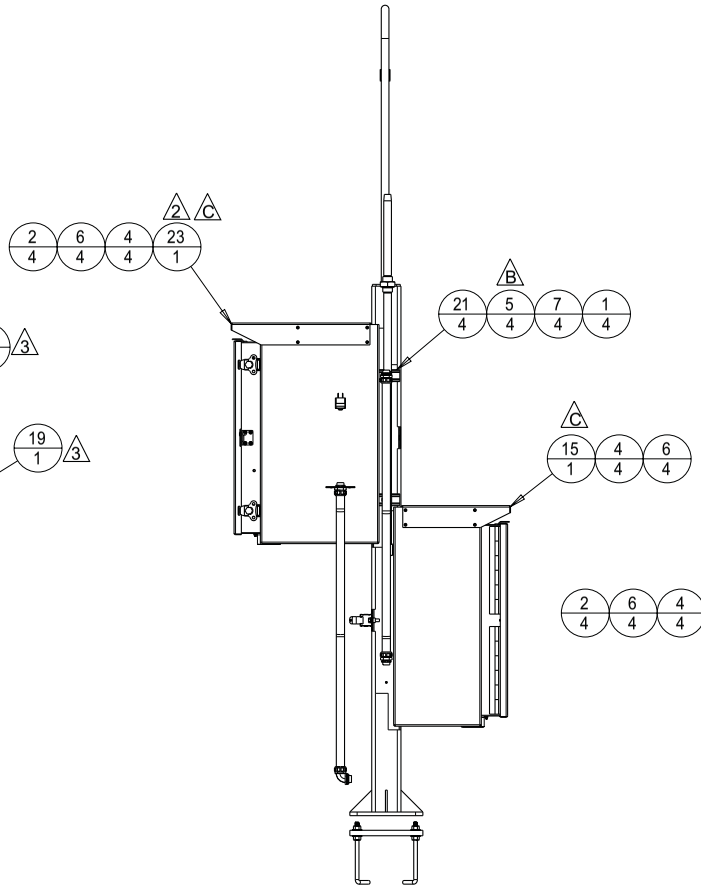

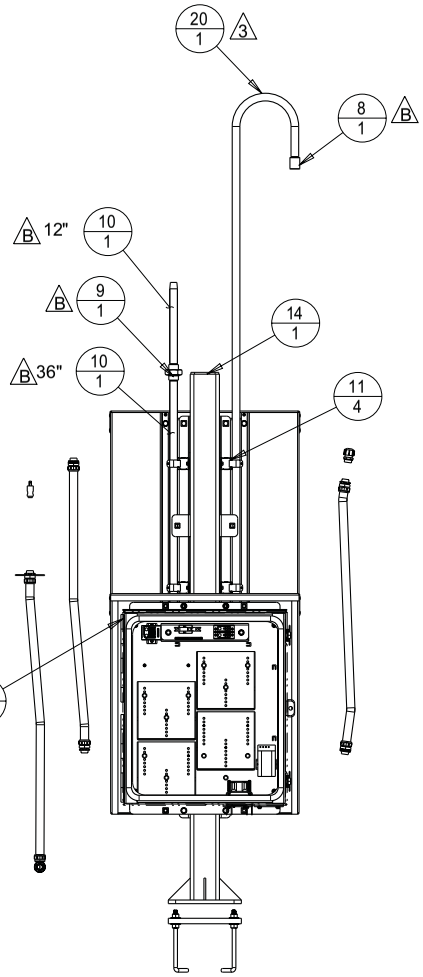

NOTE:
WIRE AS PER SCHEMATIC 19219
C

SCALE 0.040

REV	DESCRIPTION	DATE	CHKD
C	SUN SHADE 14524 QTY 1 WAS 2, 19219 ADDED INSTRUMENT BOX 19211 WAS 14341, SCHEM 19219 WAS 19011, ECN 2934	5 FEB 2016	CCB
B	PICTORIAL UPDATE TO REFLECT SEE SHT 2 FOR HDWR CHANGES, REF ECN 2830	19NOV2014	GCH
A	PRODUCTION RELEASE, REF ECN 2764	28 MAR2014	CCB

MATERIAL	SCALE				Natural Resources Canada				DWG SIZE
AS SHOWN	AS SHOWN	UNLESS OTHERWISE SPECIFIED DIMENSIONS ARE IN INCHES	XX ± 0.03 XXX ± 0.01	ANGLES ± 0.5° OTHER _____	DWN GCH	DATE DWN 24OCT2013	CHKD	DATE	A1

INDEX	PART#	DESCRIPTION	QTY	
1	9000-0104	SCR HHC 1/4-20*.75"L GR 8 STL YELLOW ZN CHROMATE PLD	4	3
2	9000-0106	SCR HHC 3/8-16*1.25"L GR 8 STL YEL ZN CHROMATE	14	3
3	9001-1042	NUT 3/8-16 NYLOK HEX GR8 YELLOW ZN CHROMATE PLD	4	3
4	9002-0073	WSHR 3/8" FLAT SAE .81"OD STL YELLOW ZN CHROMATE PLD	18	2
5	9002-0077	WSHR 1/4" FLAT BB SST	4	2 B
6	9002-1036	LOCK WASHER, 3/8, YELLOW ZN CHROMATE	18	3
7	9002-1037	WSHR 1/4" LOCK REG STL YELLOW ZN CHROMATE PLD	4	3
8	9045-0258	CPLG, 3/4" NPT SCH 40, AL	3	B
9	9045-0259	UNION, 3/4" NPT CLASS 150, AL	1	B
10	9045-0260	PIPE, 3/4", SCH40, AL	2	B 2 PIECES, 48" TOTAL, SEE DRAWING FOR LENGTHS
11	9085-0016	PIPE CLAMP, 3/4NPT, STRUT MNT, SST	7	B
12	14328	CHANNEL, STRAIN RELIEF, CONDUIT	1	2
13	14340	BATTERY BOX ASSEMBLY, POST MNT, 26"HX22WX14DP	1	
14	14342	POST, WELDED, 4"X4"X72.75"T, AL	1	
15	14524	SHADE, SUN, POST MNT BOX	1	C
16	14541	FOUNDATION HDWR, AC KIT	1	2
17	14550-01	YAGI ANTENNA HARNESS, 2 STGHT CONN	1	3
18	14550-02	GPS HARNESS, 2 STGHT CONN	1	3
19	14550-03	BATTERY BOX HARNESS	1	3
20	14568	MAST, YAGI ANTENNA, 3/4 NPT, SCH 40, GALV	1	3
21	19058	ANTENNA MNT	4	3
22	19211	INSTRUMENT BOX ASSEMBLY, POST MNT, 26"Hx22"Wx18.25"DP	1	C
23	19216	SHADE, SUN, POST MNT BOX	1	C

TITLE	DRAWING NUMBER	REV.
GEOPHYSICAL STATION AC KIT ENCLOSURE	14339	C
		SHT. 2/2

REV	DESCRIPTION	DATE	CHKD
C	SUN SHADE 14524 QTY 1 WAS 2, 19219 ADDED INSTRUMENT BOX 19211 WAS 14341, SCHEM 19219 WAS 19011, ECN 2934	5 FEB 2016	CCB
B	9002-0077 SST WSHR WAS 0035 AL PARTS WAS GALV, ECN 2830	19 NOV 2014	GCH
A	PRODUCTION RELEASE, REF ECN 2764	28 MAR 2014	CCB

MATERIAL: AS SHOWN

SCALE: AS SHOWN

UNLESS OTHERWISE SPECIFIED DIMENSIONS ARE IN INCHES

XX ± 0.03
XXX ± 0.01

ANGLES ± 0.5°
OTHER _____

Natural Resources Canada

DWN	DATE DWN	CHKD	DATE
GCH	24OCT2013		

DWG SIZE: A1

INDEX	PART#	DESCRIPTION	QTY
1	9000-0106	SCR HHC 3/8-16*1.25"L GR 8 STL YEL ZN CHROMATE	4
2	9001-5019	NUT 3/8-16 RIVNUT .027-.150" ALY STL	10
3	14342-21	BASE PLATE, POST, .5"X10X10, AL	1
4	14342-22	TUBE, .25"X4X4, AL	1
5	14342-23	CAP, 4X4, AL	1
6	14342-24	GUSSET, .25"	4
7	14523	MNTG ANGLE, POST, AL	4

TITLE	DRAWING NUMBER	REV.
POST, WELDED, 4"X4"X72.75"T, AL	14342	B
		SHT. 1/5

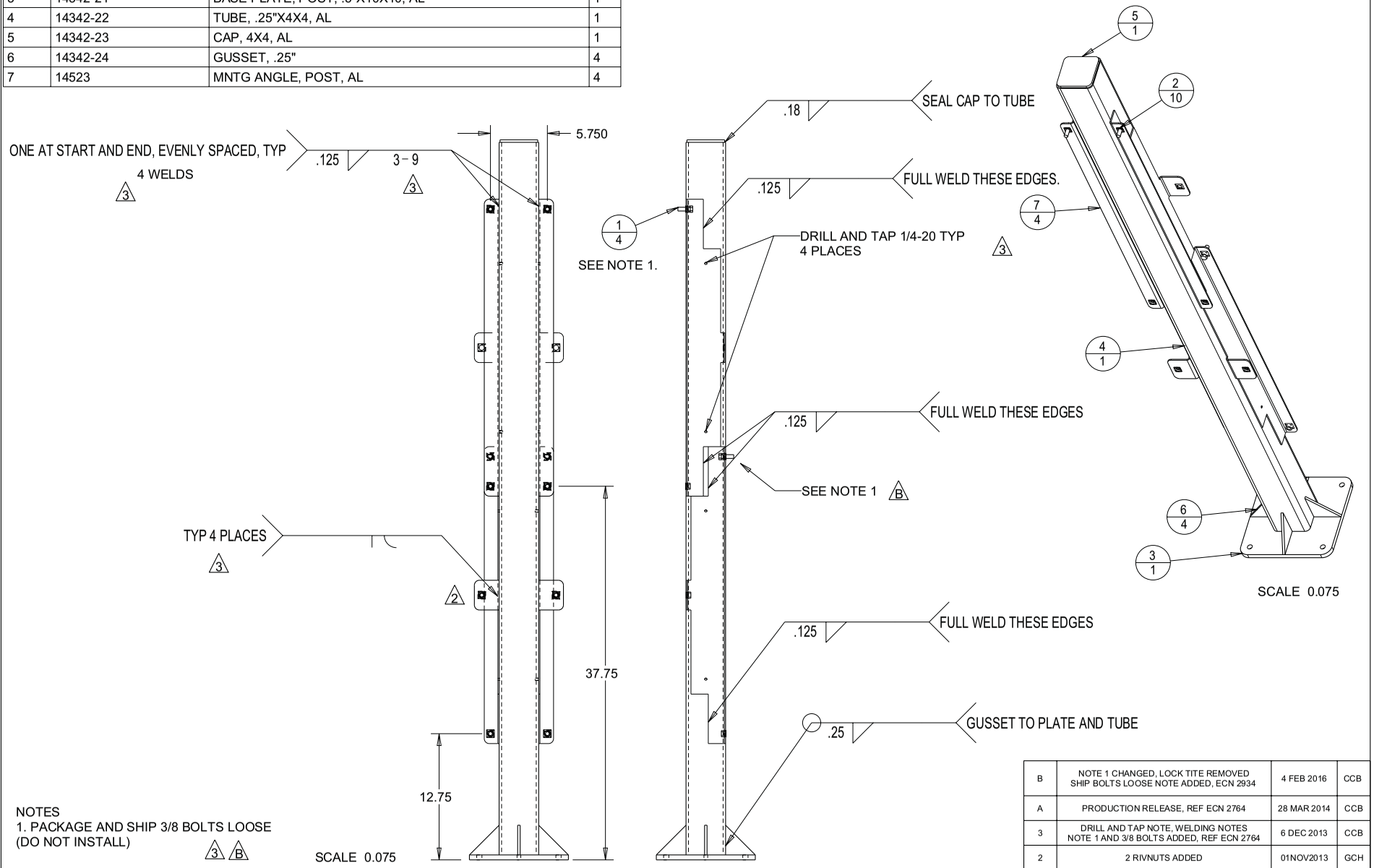

NOTES
1. PACKAGE AND SHIP 3/8 BOLTS LOOSE (DO NOT INSTALL)

REV	DESCRIPTION	DATE	CHKD
B	NOTE 1 CHANGED, LOCK TITE REMOVED SHIP BOLTS LOOSE NOTE ADDED, ECN 2934	4 FEB 2016	CCB
A	PRODUCTION RELEASE, REF ECN 2764	28 MAR 2014	CCB
3	DRILL AND TAP NOTE, WELDING NOTES NOTE 1 AND 3/8 BOLTS ADDED, REF ECN 2764	6 DEC 2013	CCB
2	2 RIVNUTS ADDED	01NOV2013	GCH
1	PROTOTYPE RELEASE. ECN 2756.	29OCT2013	GCH

MATERIAL: AS SHOWN

SCALE: AS SHOWN

UNLESS OTHERWISE SPECIFIED DIMENSIONS ARE IN INCHES — XX ± 0.03, XXX ± 0.01 — ANGLES ± 0.5° OTHER _____

Natural Resources Canada

DWN	DATE DWN	CHKD	DATE
GCH	29OCT2013		

DWG SIZE: A1

TITLE	DRAWING NUMBER	REV. B
POST, WELDED, 4"X4"X72.75"T, AL	14342	SHT. 2/5

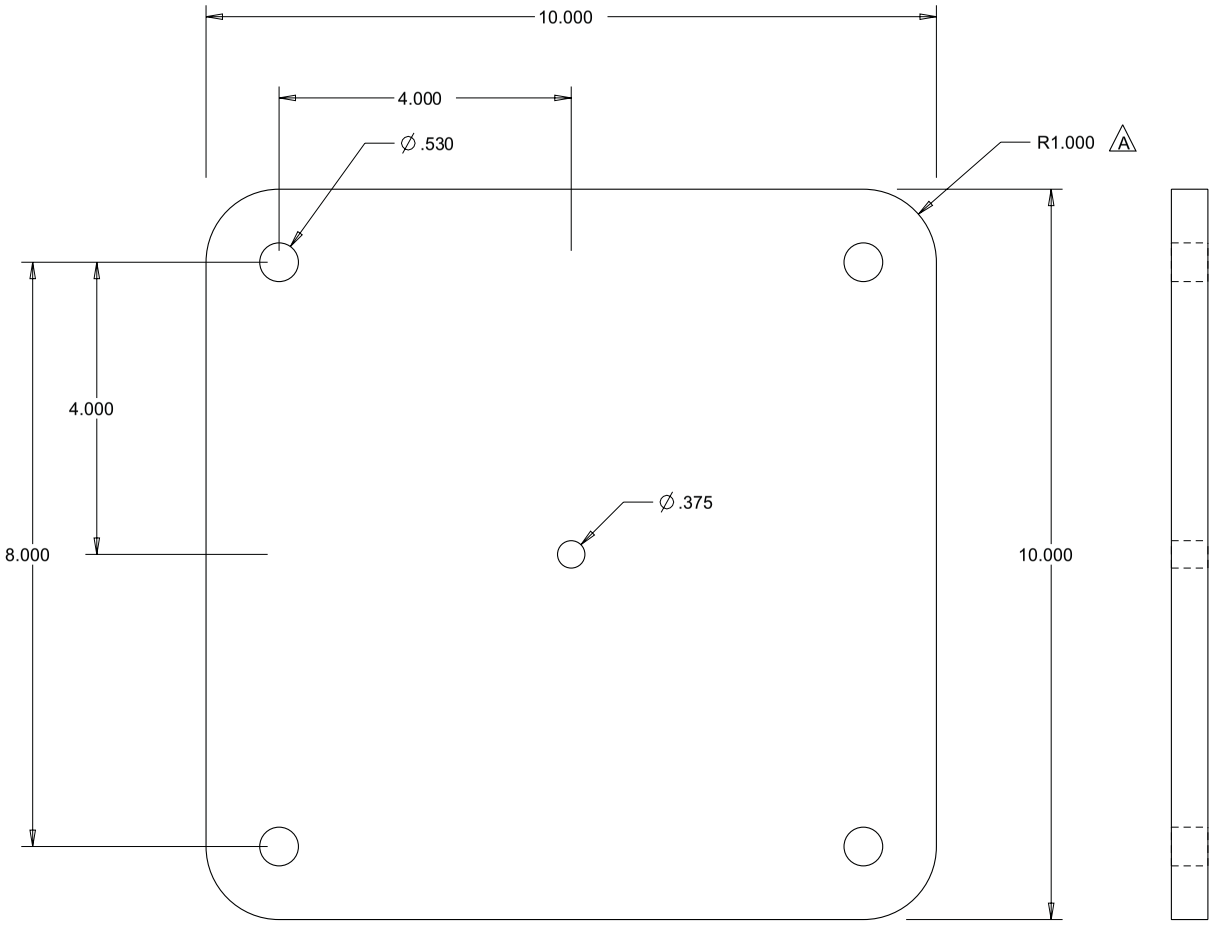

SCALE 0.400

14342-21 BASE PLATE

REV	DESCRIPTION	DATE	CHKD
B	SEE SHT 1 FOR CHANGES REF ECN 2934	4 FEB 2016	CCB
A	MISSING RADIUS ADDED. NON ECN.	28JUL2014	GCH
A	PRODUCTION RELEASE, REF ECN 2764	28 MAR 2014	CCB
3	SEE SHT 1 FOR CHANGES REF ECN 2764	6 DEC 2013	CCB
1	PROTOTYPE RELEASE. ECN 2756.	29OCT2013	GCH

MATERIAL	SCALE								DWG SIZE
AL PLATE, .50" THK, 6061-T6	AS SHOWN	UNLESS OTHERWISE SPECIFIED DIMENSIONS ARE IN INCHES	XX ± 0.03 XXX ± 0.01	ANGLES ± 0.5° OTHER _____	Natural Resources Canada	DWN GCH	DATE DWN 29OCT2013	CHKD	DATE	A1

TITLE	DRAWING NUMBER	REV.
POST, WELDED, 4"X4"X72.75"T, AL	14342	B
		SHT. 3/5

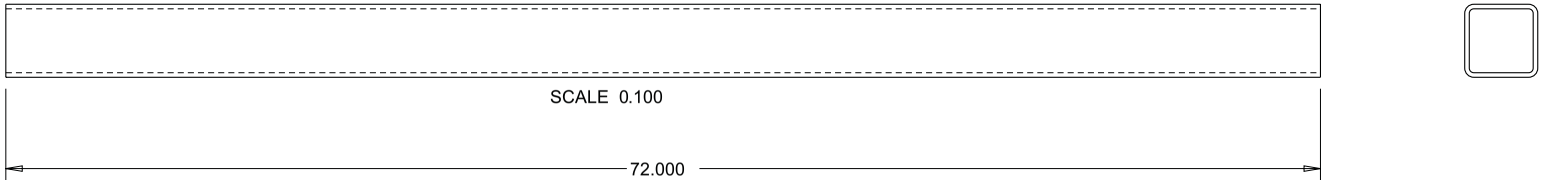

14342-22 TUBE

MATERIAL	SCALE								
ALUMINUM SQUARE TUBE, ROUND CORNERS .25"THKX4X4, 6061-T6	AS SHOWN	UNLESS OTHERWISE SPECIFIED DIMENSIONS ARE IN INCHES	XX ± 0.03 XXX ± 0.01	ANGLES ± 0.5° OTHER _____	Natural Resources Canada				DWG SIZE
					DWN GCH	DATE DWN 29OCT2013	CHKD	DATE	A1

REV	DESCRIPTION	DATE	CHKD
B	SEE SHT 1 FOR CHANGES REF ECN 2934	4 FEB 2016	CCB
A	PRODUCTION RELEASE, REF ECN 2764	28 MAR 2014	CCB
3	SEE SHT 1 FOR CHANGES REF ECN 2764	6 DEC 2013	CCB
1	PROTOTYPE RELEASE. ECN 2756.	29OCT2013	GCH

TITLE	DRAWING NUMBER	REV.
POST, WELDED, 4"X4"X72.75"T, AL	14342	B
		SHT. 4/5

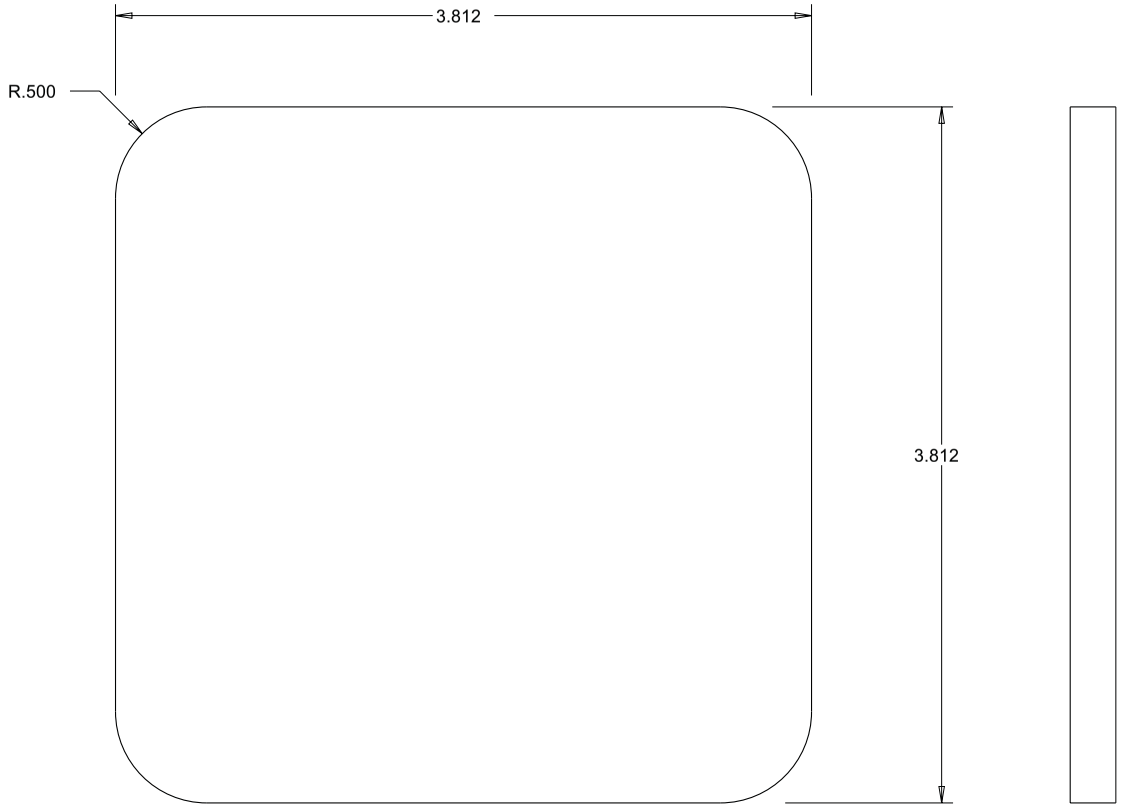

SCALE 1.000

14342-23 CAP

REV	DESCRIPTION	DATE	CHKD
B	SEE SHT 1 FOR CHANGES REF ECN 2934	4 FEB 2016	CCB
A	PRODUCTION RELEASE, REF ECN 2764	28 MAR 2014	CCB
3	SEE SHT 1 FOR CHANGES REF ECN 2764	6 DEC 2013	CCB
1	PROTOTYPE RELEASE. ECN 2756.	29OCT2013	GCH

MATERIAL	SCALE								
AL PLATE, .25" THK, 6061-T6	AS SHOWN	UNLESS OTHERWISE SPECIFIED DIMENSIONS ARE IN INCHES	XX ± 0.03 XXX ± 0.01	ANGLES ± 0.5° OTHER _____	Natural Resources Canada				DWG SIZE A1
					DWN GCH	DATE DWN 29OCT2013	CHKD	DATE	

TITLE	DRAWING NUMBER	REV.
POST, WELDED, 4"X4"X72.75"T, AL	14342	B
		SHT. 5/5

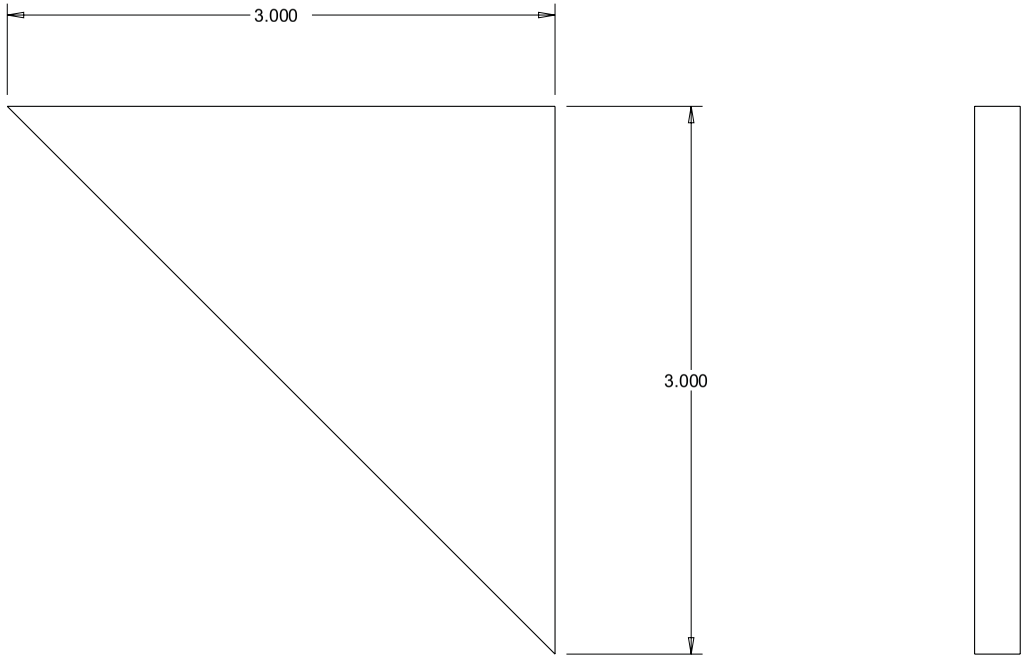

14342-24 GUSSET

REV	DESCRIPTION	DATE	CHKD
B	SEE SHT 1 FOR CHANGES REF ECN 2934	4 FEB 2016	CCB
A	PRODUCTION RELEASE, REF ECN 2764	28 MAR 2014	CCB
3	SEE SHT 1 FOR CHANGES REF ECN 2764	6 DEC 2013	CCB
1	PROTOTYPE RELEASE. ECN 2756.	29OCT2013	GCH

MATERIAL	SCALE								DWG SIZE
AL PLATE, .25" THK, 6061-T6	AS SHOWN	UNLESS OTHERWISE SPECIFIED DIMENSIONS ARE IN INCHES	XX ± 0.03 XXX ± 0.01	ANGLES ± 0.5° OTHER _____	Natural Resources Canada				A1
					DWN GCH	DATE DWN 29OCT2013	CHKD	DATE	

INDEX	PART#	DESCRIPTION	QTY
1	9001-5042	NUT 1/4-20 SELF-CLINCH SST	8
2	9002-4005	WSHR 1/4" SEALING STL/RBR	8
3	9004-0026	RIVET .188" .13-.25" POP SST DM HD.440"L	8
4	9004-1101	PIN MAXLOK TRUSS/HD 3/16"DIA STL ZN PLD	4
5	9004-1102	COLLAR, MAXLOK 3/16"DIA PIN	4
6	9030-0026	GSKT, URETHANE .125"THK*0.375" S/ADH	8
7	9030-0028FULL	SEAL, BULB RS SECT PUSH ON TRIM .09"GRIP	1
8	9046-0024	LATCH, ROTARY ACTION, HEX CAM	2
9	9073-0021	HINGE, ALUM, 2" OW, 2" KNUCLE, .12" THK, .25DIA PIN, 12" LONG	2
10	14343-21	BODY, BOX	1
11	14343-22	END PANEL, BATTERY BOX, BLANK	1
12	14343-23	END PANEL, BATTERY BOX	1
13	14343-24	DOOR	1
14	14343-25	DRIP LIP	1
15	14350	HASP, PADLOCK	1
16	14450-01	INSULATION, TOP, HALF	2
17	14450-02	INSULATION, SIDE	2
18	14450-03	INSULATION, BOTTOM	1
19	14450-04	INSULATION, DOOR	1
20	14450-05	INSULATION, BACK	2
21	19045-01	CONDUIT PLATE, 3/4 PIPE	1
22	19045-02	COVER PLATE	2
23	19045-04	CONDUIT PLATE, 1" PIPE	1
24	MCMASTER_CARR_92620A540	SCR HHC 1/4-20*.75"L GR 8 STL YELLOW ZN CHROMATE PLD	8
25	MCMASTERCARR_94639A177	SPACER, NYLON, 5/8" OD, .252 ID, 3/4" LONG	4
26	PEM_FHS-0420-24	STUD, SELF-CLINCH 1/4-20*1.50"L SST	4
	9014-0026	SILICONE, RTV 732, AL	A/R

TITLE	DRAWING NUMBER	REV.
BOX, POST MNT, SEALED AL, 26"HX22WX14DP	14343	2
		SHT. 1/6

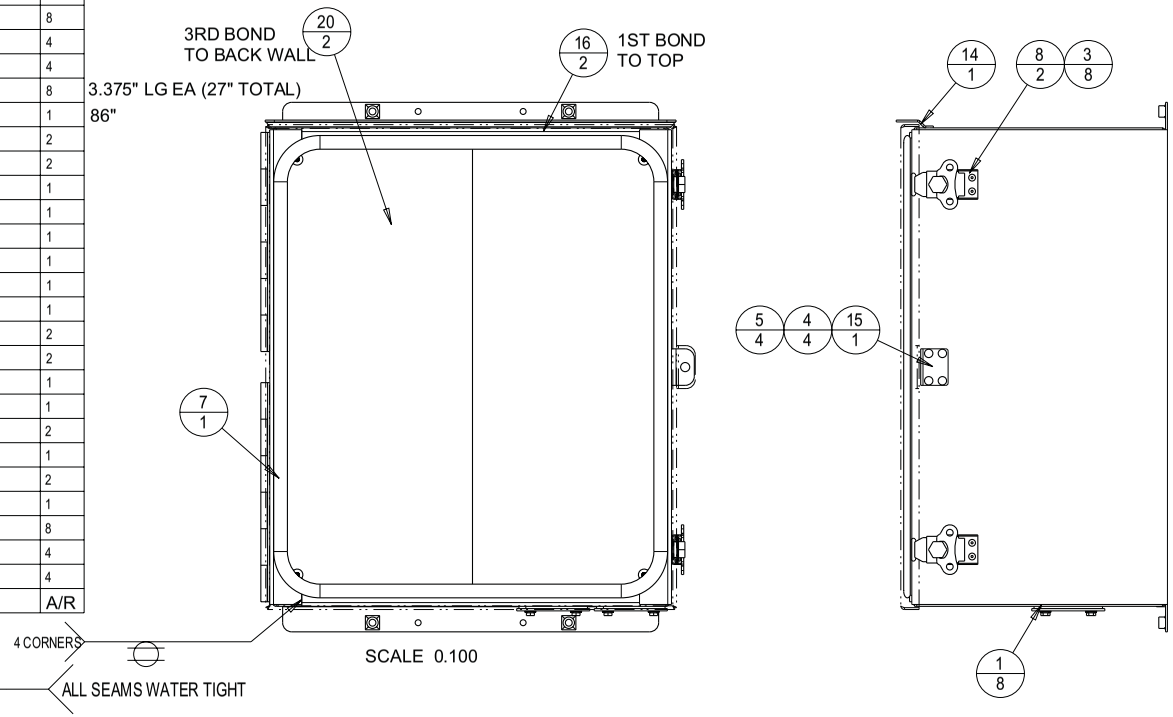

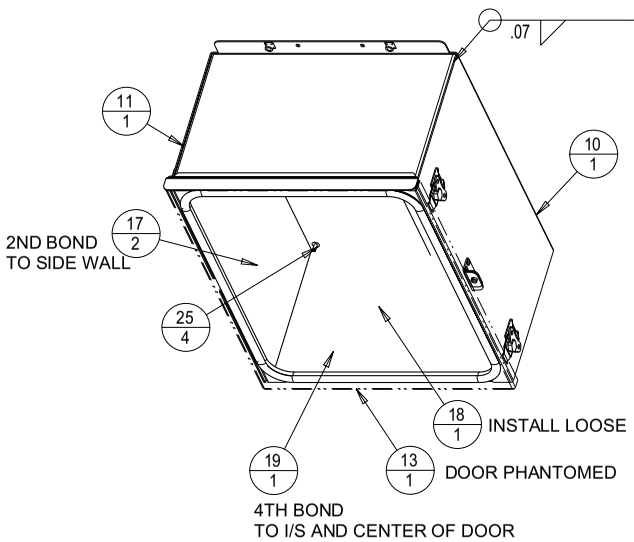

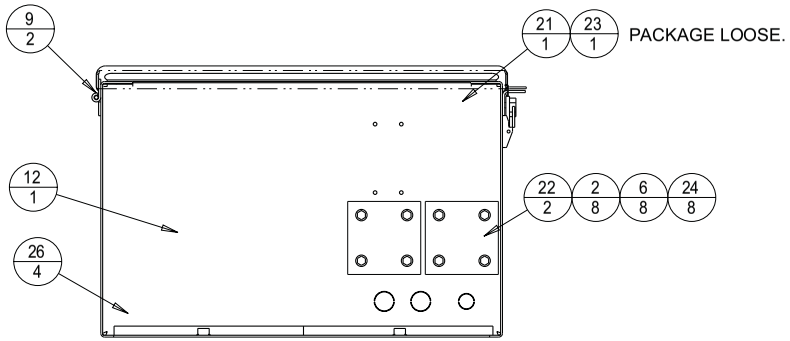

MATERIAL	SCALE										
AS SHOWN	AS SHOWN	UNLESS OTHERWISE SPECIFIED DIMENSIONS ARE IN INCHES	XX ± 0.03 XXX ± 0.01	ANGLES ± 0.5° OTHER _____	Natural Resources Canada				DWG SIZE A1	1	PROTOTYPE RELEASE. ECN 2756.	25OCT2013	GCH
					DWN GCH	DATE DWN 25OCT2013	CHKD	DATE		REV	DESCRIPTION	DATE	CHKD

TITLE	DRAWING NUMBER	REV.
BOX, POST MNT, SEALED AL, 26"HX22WX14DP	14343	2 SHT. 2/6

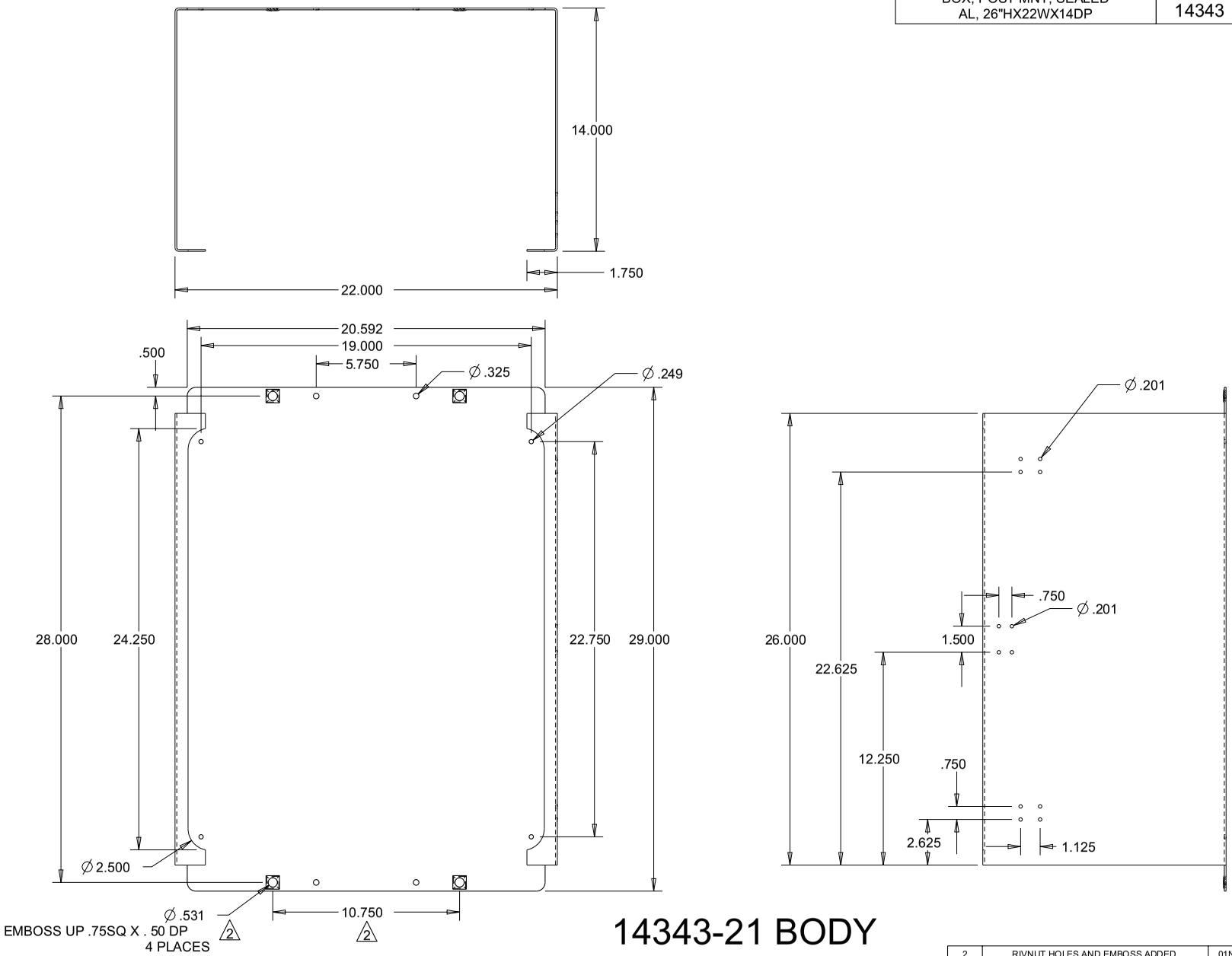

14343-21 BODY

MATERIAL	SCALE										
AL SHT, 10GA(.102) 5052-H32	AS SHOWN	UNLESS OTHERWISE SPECIFIED DIMENSIONS ARE IN INCHES	XX ± 0.03 XXX ± 0.01	ANGLES ± 0.5° OTHER _____	Natural Resources Canada				DWG SIZE	2	RIVNUT HOLES AND EMBOSS ADDED.	01NOV2013	GCH
					DWN GCH	DATE DWN 25OCT2013	CHKD	DATE	A1	1	PROTOTYPE RELEASE. ECN 2756.	25OCT2013	GCH
										REV	DESCRIPTION	DATE	CHKD

TITLE	DRAWING NUMBER	REV.
BOX, POST MNT, SEALED AL, 26"HX22WX14DP	14343	2 SHT. 3/6

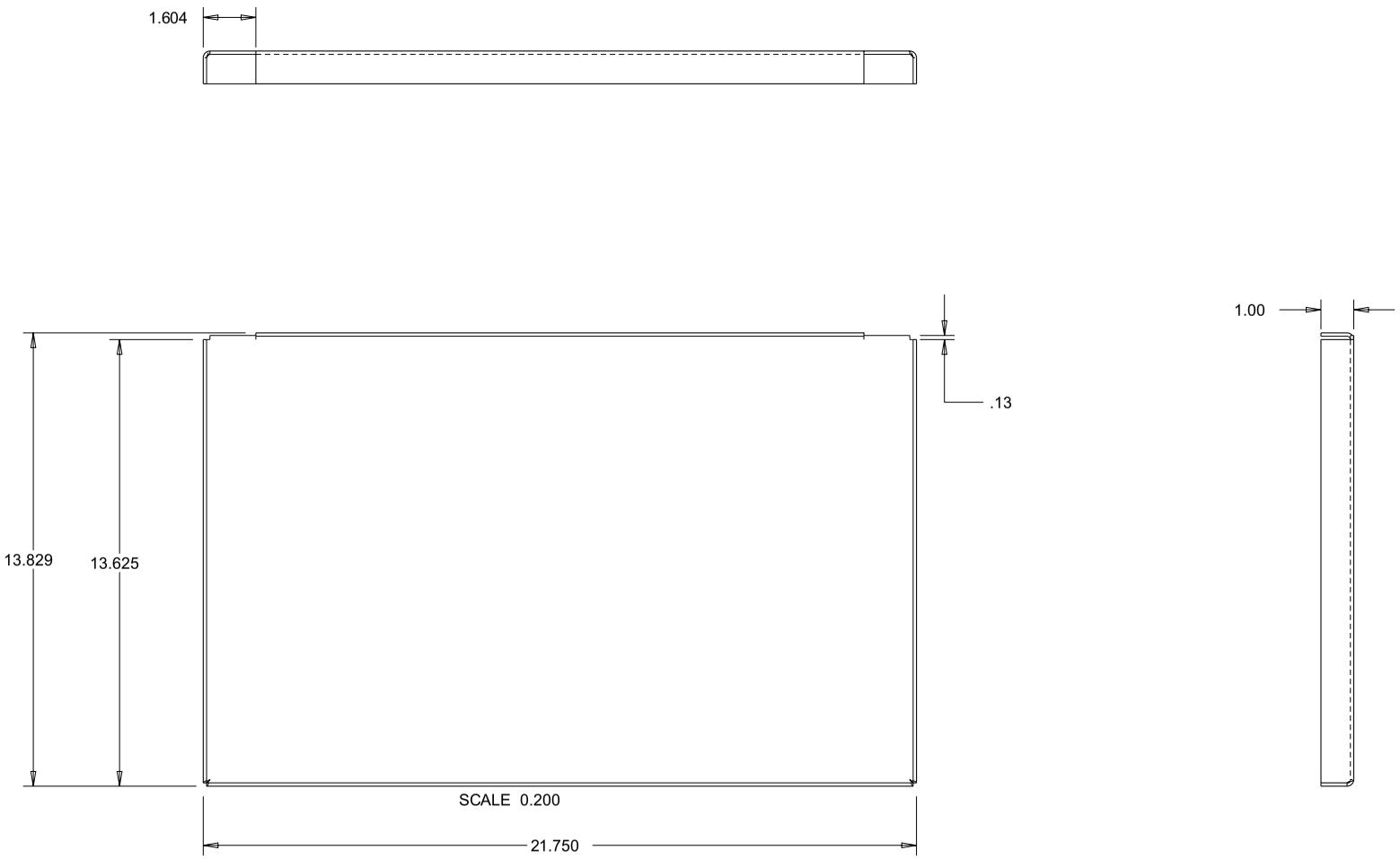

14343-22 TOP

MATERIAL	SCALE										
AL SHT, 10GA(.102) 5052-H32	AS SHOWN	UNLESS OTHERWISE SPECIFIED DIMENSIONS ARE IN INCHES	XX ± 0.03 XXX ± 0.01	ANGLES ± 0.5° OTHER _____	Natural Resources Canada				DWG SIZE	1	PROTOTYPE RELEASE. ECN 2756.	25OCT2013	GCH
					DWN GCH	DATE DWN 25OCT2013	CHKD	DATE	A1	REV	DESCRIPTION	DATE	CHKD

TITLE	DRAWING NUMBER	REV.
BOX, POST MNT, SEALED AL, 26"HX22WX14DP	14343	2
		SHT. 4/6

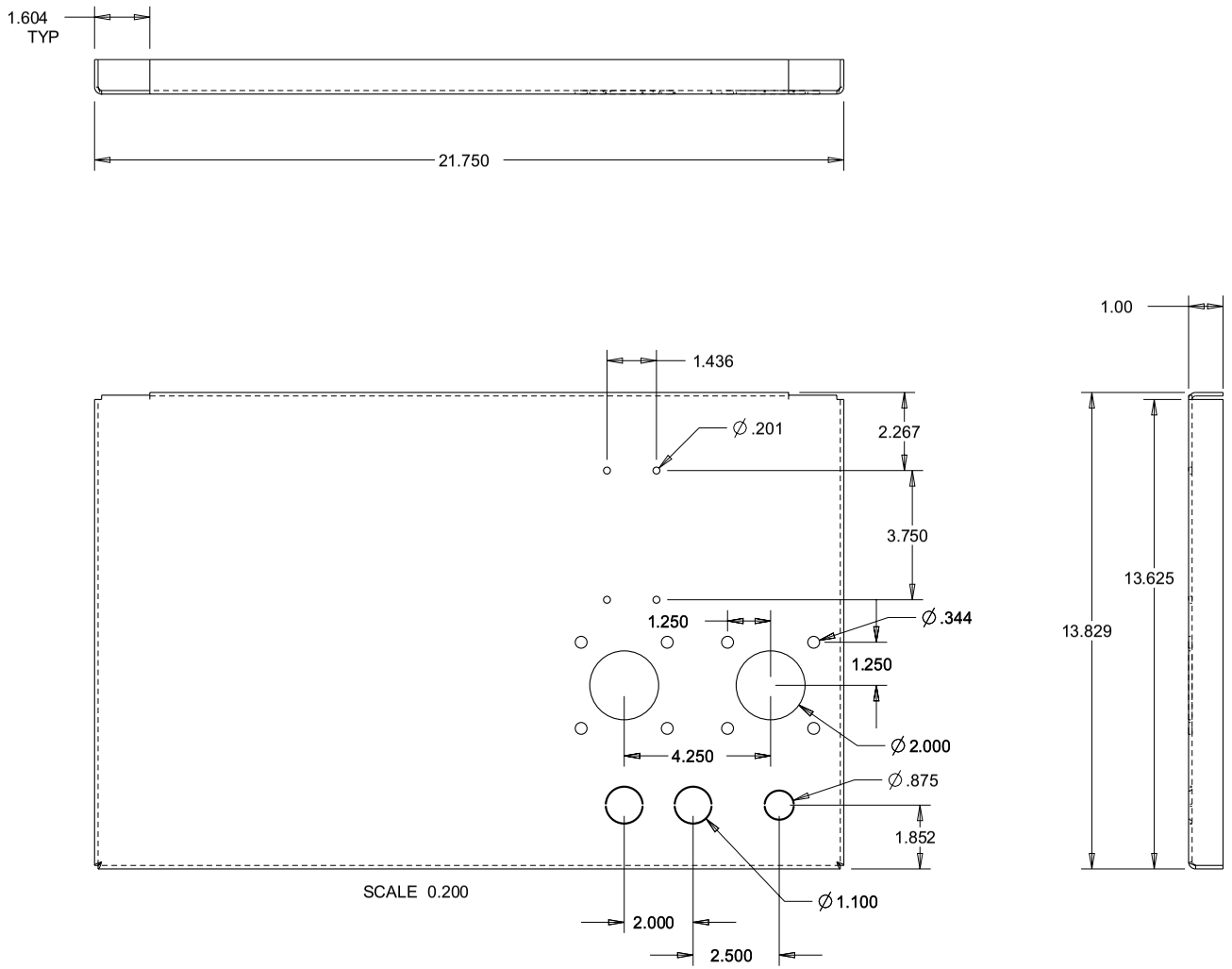

14343-23 BTM

MATERIAL	SCALE										
AL SHT, 10GA(.102) 5052-H32	AS SHOWN	UNLESS OTHERWISE SPECIFIED DIMENSIONS ARE IN INCHES	XX ± 0.03 XXX ± 0.01	ANGLES ± 0.5° OTHER _____	Natural Resources Canada				DWG SIZE	1	PROTOTYPE RELEASE. ECN 2756.	25OCT2013	GCH
					DWN GCH	DATE DWN 25OCT2013	CHKD	DATE	A1	REV	DESCRIPTION	DATE	CHKD

TITLE	DRAWING NUMBER	REV.
BOX, POST MNT, SEALED AL, 26"HX22WX14DP	14343	2 SHT. 5/6

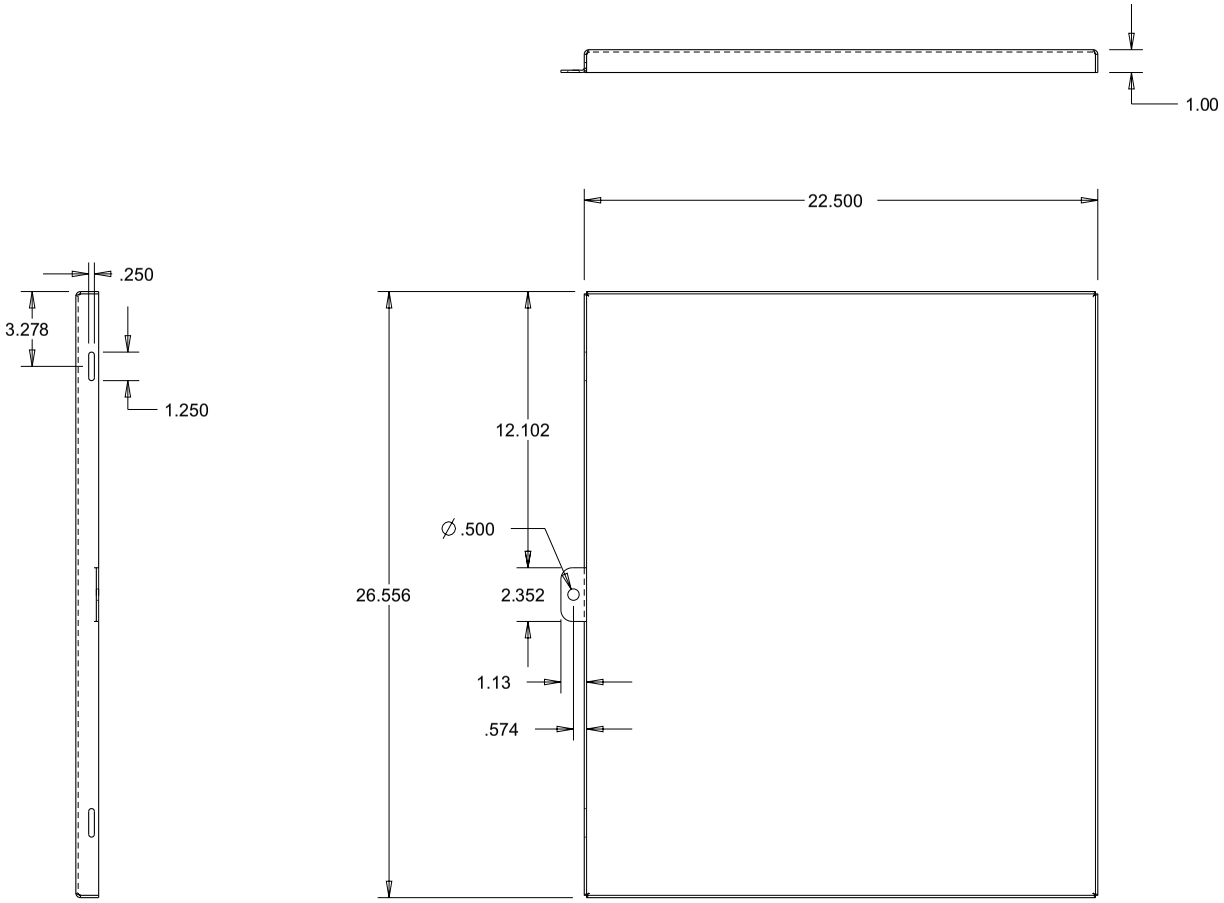

SCALE 0.125

14343-24 DOOR

MATERIAL	SCALE										
AL SHT, 10GA(.102) 5052-H32	AS SHOWN	UNLESS OTHERWISE SPECIFIED DIMENSIONS ARE IN INCHES	XX ± 0.03 XXX ± 0.01	ANGLES ± 0.5° OTHER _____	Natural Resources Canada				DWG SIZE	1	PROTOTYPE RELEASE. ECN 2756.	25OCT2013	GCH
					DWN GCH	DATE DWN 25OCT2013	CHKD	DATE	A1	REV	DESCRIPTION	DATE	CHKD

TITLE	DRAWING NUMBER	REV.
BOX, POST MNT, SEALED AL, 26"HX22WX14DP	14343	2
		SHT. 6/6

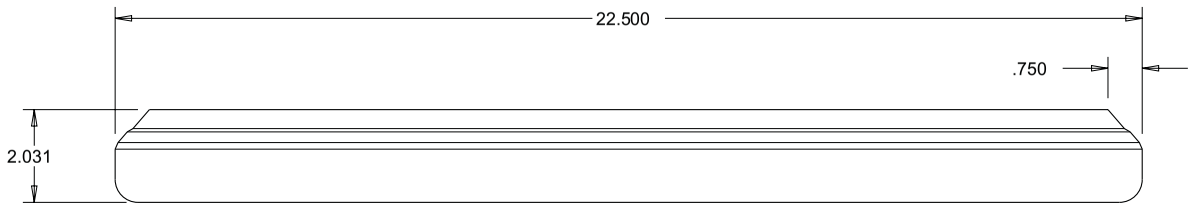

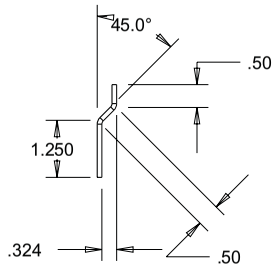

14343-25 DRIP LIP

MATERIAL	SCALE										
AL SHT, 10GA(.102) 5052-H32	AS SHOWN	UNLESS OTHERWISE SPECIFIED DIMENSIONS ARE IN INCHES	XX ± 0.03 XXX ± 0.01	ANGLES ± 0.5° OTHER _____	Natural Resources Canada				DWG SIZE	1	PROTOTYPE RELEASE. ECN 2756.	25OCT2013	GCH
					DWN GCH	DATE DWN 25OCT2013	CHKD	DATE	A1	REV	DESCRIPTION	DATE	CHKD

INDEX	PART#	DESCRIPTION	QTY
1	9001-5042	NUT 1/4-20 SELF-CLINCH SST	26
2	14344-21	INNER PANEL, BATTERY BOX	1

TITLE	DRAWING NUMBER	REV.
INNER PANEL, BATTERY BOX	14344	1
		SHT. 1/2

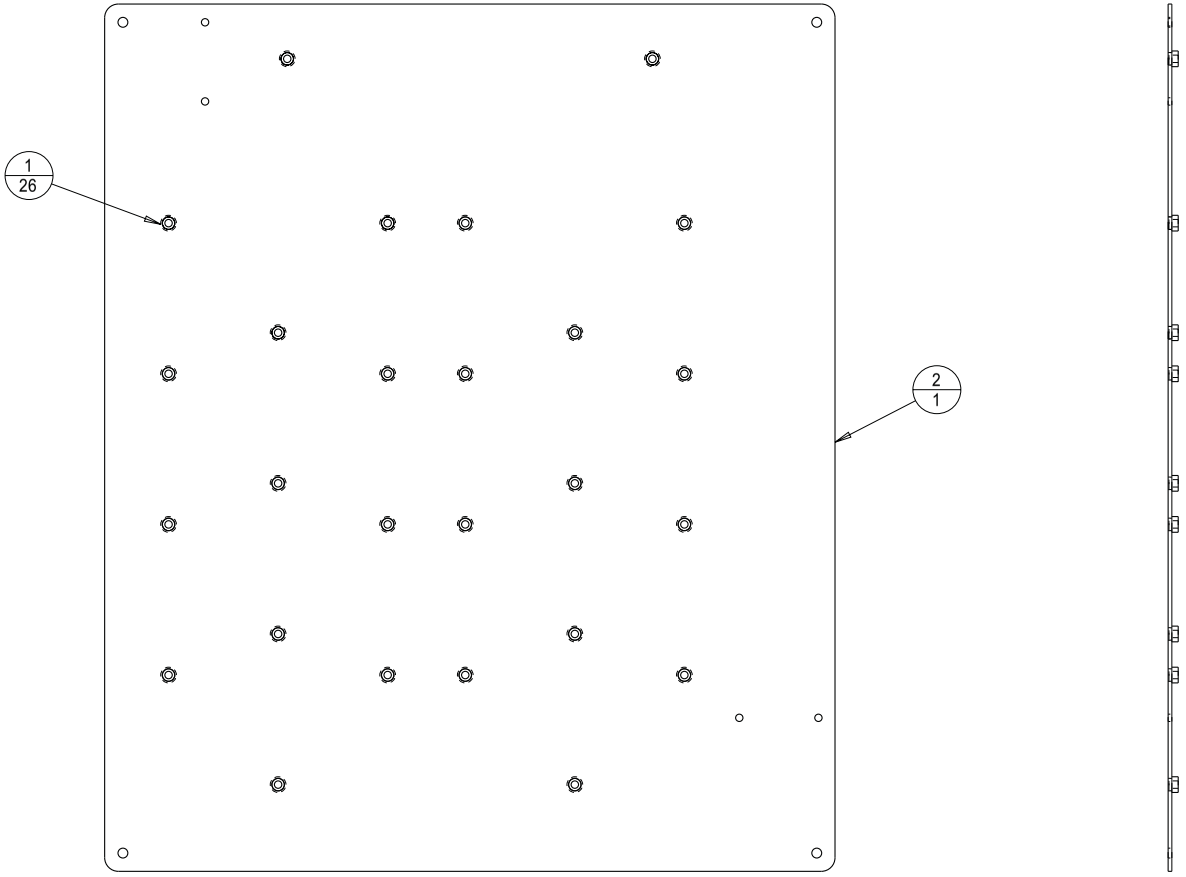

SCALE 0.200

14344

MATERIAL	SCALE										
AS SHOWN	AS SHOWN	UNLESS OTHERWISE SPECIFIED DIMENSIONS ARE IN INCHES	XX ± 0.03 XXX ± 0.01	ANGLES ± 0.5° OTHER _____	Natural Resources Canada				DWG SIZE	1	PROTOTYPE RELEASE. ECN 2756.	25 OCT 2013	GCH
					DWN GCH	DATE DWN 25OCT2013	CHKD	DATE	A1	REV	DESCRIPTION	DATE	CHKD

TITLE	DRAWING NUMBER	REV. 1
INNER PANEL, BATTERY BOX	14344	SHT. 2/2

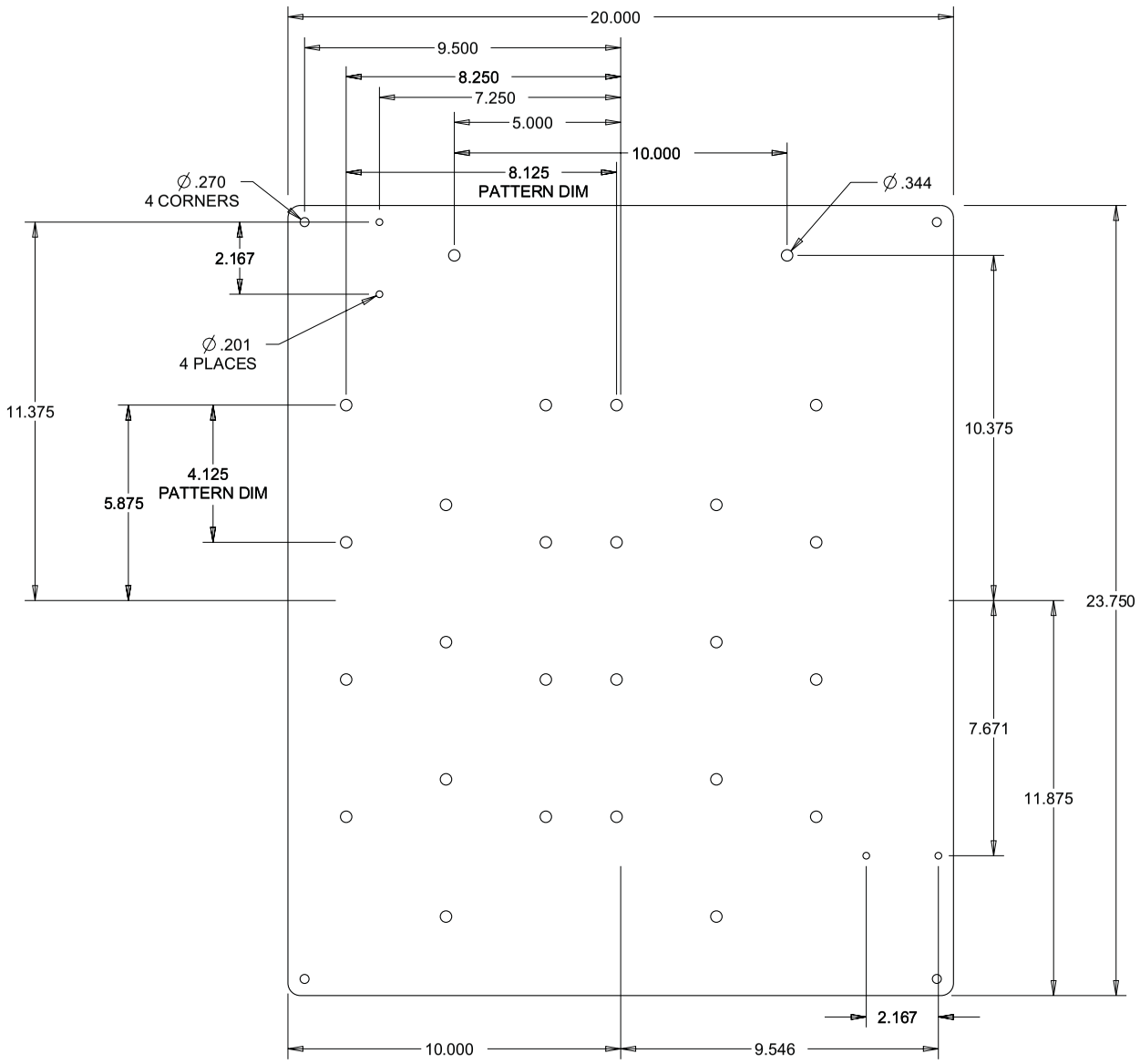

14344-21

MATERIAL	SCALE										
AL SHT, 10GA(.102) 5052-H32	AS SHOWN	UNLESS OTHERWISE SPECIFIED DIMENSIONS ARE IN INCHES	XX ± 0.03 XXX ± 0.01	ANGLES ± 0.5° OTHER _____	Natural Resources Canada				DWG SIZE A1	1	PROTOTYPE RELEASE. ECN 2756.	25OCT2013	GCH
					DWN GCH	DATE DWN 25OCT2013	CHKD	DATE		REV	DESCRIPTION	DATE	CHKD

TITLE	DRAWING NUMBER	REV.
BATTERY TRAY, PANEL MNT 7.9"HX7.8WX11.3W, AL	14345	1 SHT. 1/1

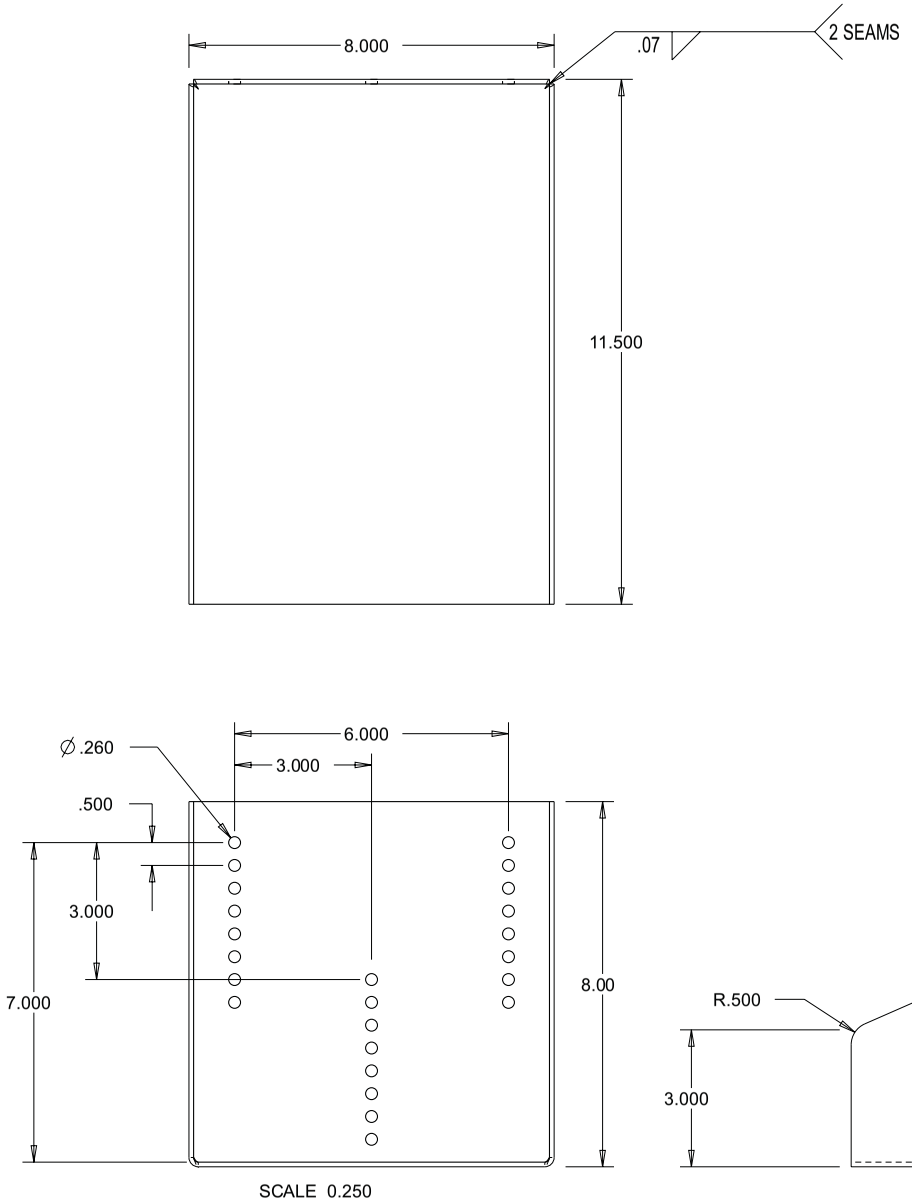

MATERIAL	SCALE				Natural Resources Canada				DWG SIZE	1	PROTOTYPE RELEASE. ECN 2756.	25OCT2013	GCH
AL SHT. 10GA(.102) 5052-H32	AS SHOWN	UNLESS OTHERWISE SPECIFIED DIMENSIONS ARE IN INCHES	XX ± 0.03 XXX ± 0.01	ANGLES ± 0.5° OTHER _____	DWN GCH	DATE DWN 25OCT2013	CHKD	DATE	A1	REV	DESCRIPTION	DATE	CHKD

INDEX	PART#	DESCRIPTION	QTY
1	9001-5047	NUT #8-32 SELF CLINCH STL ZN PLD	6
2	14346-21	BRKT, BATTERY TB	1

TITLE	DRAWING NUMBER	REV.
BRKT, BATTERY TB, W PEMS	14346	1
		SHT. 1/2

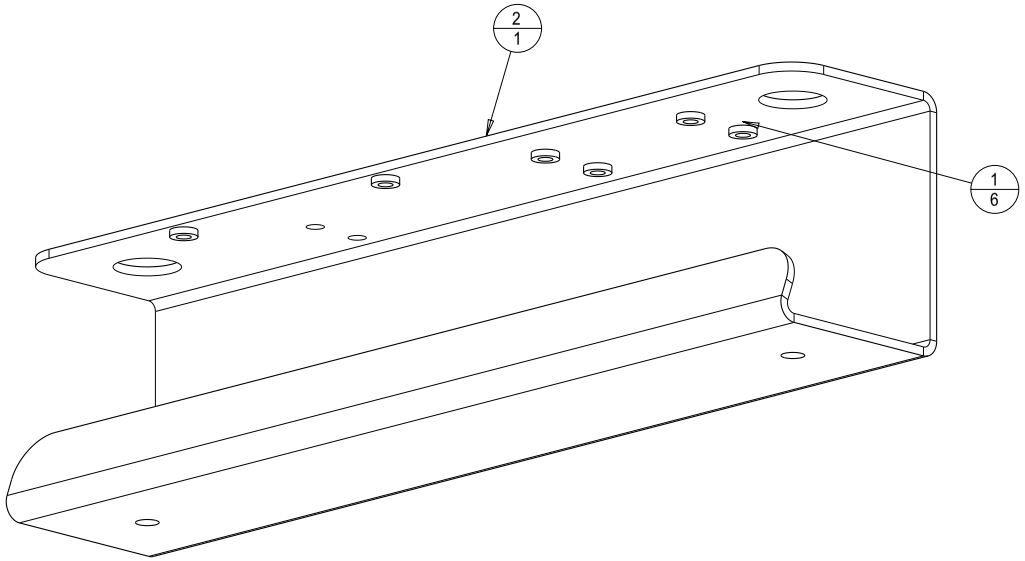

SCALE 0.500

MATERIAL	SCALE										
AS SHOWN	AS SHOWN	UNLESS OTHERWISE SPECIFIED DIMENSIONS ARE IN INCHES	XX ± 0.03 XXX ± 0.01	ANGLES ± 0.5° OTHER _____	Natural Resources Canada				DWG SIZE A1	1	PROTOTYPE RELEASE. ECN 2756.	25OCT2013	GCH
					DWN GCH	DATE DWN 25OCT2013	CHKD	DATE		REV	DESCRIPTION	DATE	CHKD

TITLE	DRAWING NUMBER	REV. 1
BRKT, BATTERY TB, W PEMS	14346	SHT. 2/2

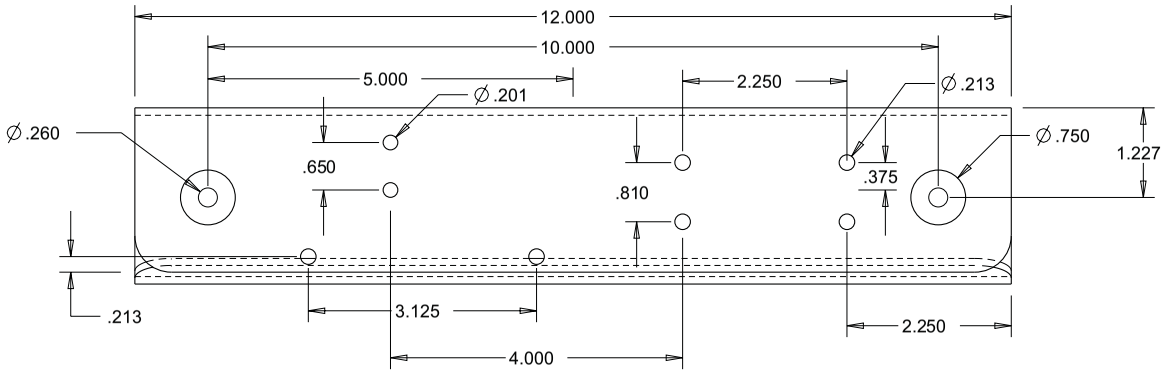

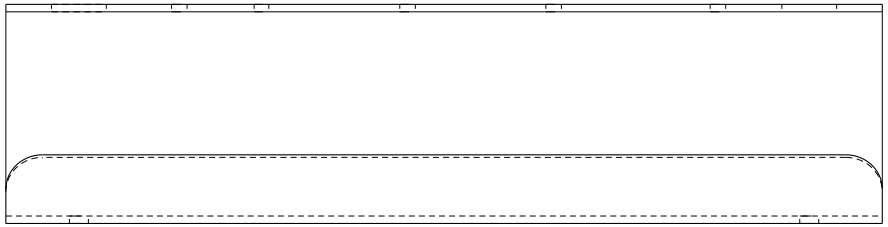

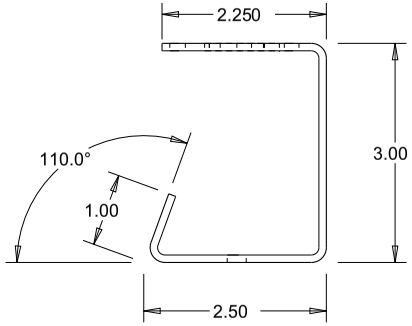

MATERIAL	SCALE										
AL SHT 10GA(.102) 5052-H32	AS SHOWN	UNLESS OTHERWISE SPECIFIED DIMENSIONS ARE IN INCHES	XX ± 0.03 XXX ± 0.01	ANGLES ± 0.5° OTHER _____	Natural Resources Canada				DWG SIZE	1	PROTOTYPE RELEASE. ECN 2756.	25OCT2013	GCH
					DWN GCH	DATE DWN 25OCT2013	CHKD	DATE	A1	REV	DESCRIPTION	DATE	CHKD

INDEX	PART#	DESCRIPTION	QTY
1	9001-5047	NUT #8-32 SELF-CLINCH SST HDN (.056")	4
2	14347-21	HEATSINK, FAN, INNER	1

TITLE	DRAWING NUMBER	REV.
HEATSINK, FAN	14347	1
		SHT. 1/6

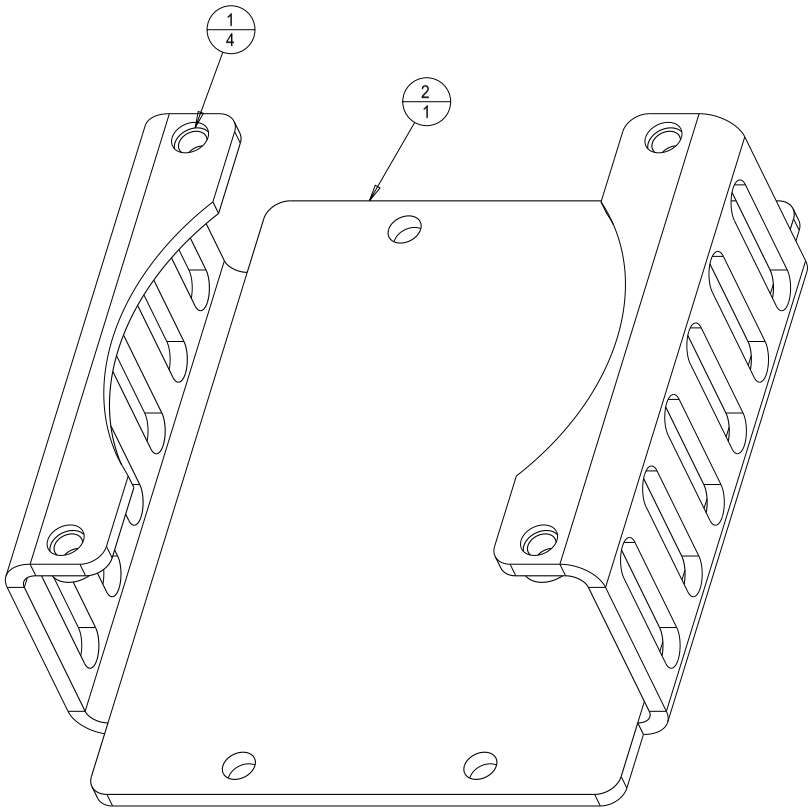

SCALE 1.000

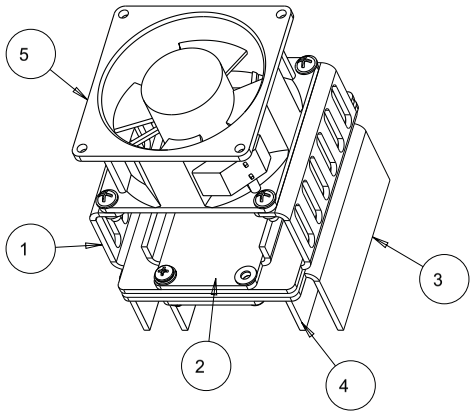

INDEX	PART#	DESCRIPTION	QTY
1	14347-01	HEATSINK, FAN, INNER,STANDOFF	1
2	14347-02	HEATSINK, INNER	1
3	14347-03	HEATSINK, OUTER	1
4	14347-04	HEATSINK, FAN, OUTER W PEMS	1
5	NMB_3115PS-12T-B30-A00	AC AXIAL FAN	1

ASSEMBLY REFERENCE

14347-01 INNER/STANDOFF

MATERIAL	SCALE										
AS SHOWN	AS SHOWN	UNLESS OTHERWISE SPECIFIED DIMENSIONS ARE IN INCHES	XX ± 0.03 XXX ± 0.01	ANGLES ± 0.5° OTHER _____	Natural Resources Canada				DWG SIZE A1	1	PROTOTYPE RELEASE. ECN 2756.	25OCT2013	GCH
					DWN GCH	DATE DWN 25OCT2013	CHKD	DATE		REV	DESCRIPTION	DATE	CHKD

TITLE	DRAWING NUMBER	REV. 1
HEATSINK, FAN	14347	SHT. 2/6

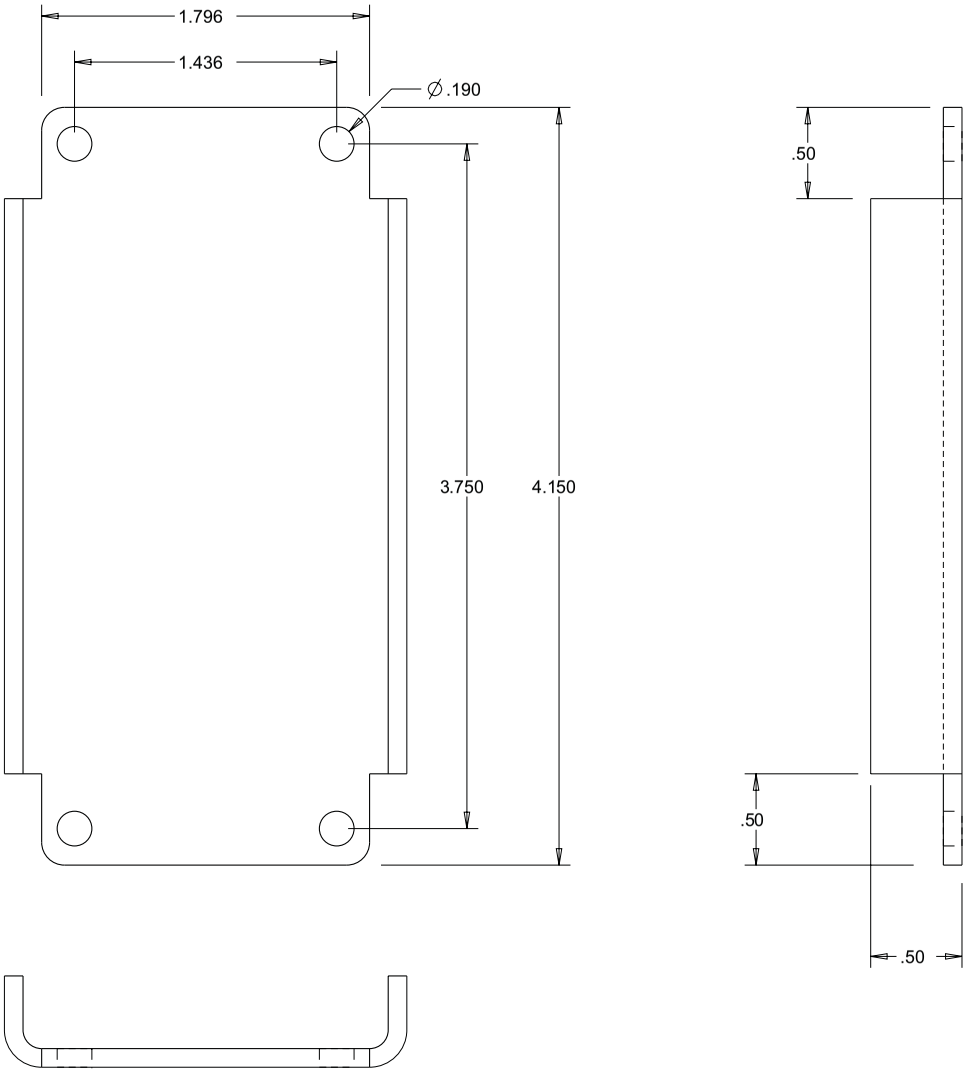

14347-02 INNER

MATERIAL	SCALE										
AL SHT 10GA(.102) 5052-H32	AS SHOWN	UNLESS OTHERWISE SPECIFIED DIMENSIONS ARE IN INCHES	XX ± 0.03 XXX ± 0.01	ANGLES ± 0.5° OTHER _____	Natural Resources Canada				DWG SIZE A1	1	PROTOTYPE RELEASE. ECN 2756.	25OCT2013	GCH
					DWN GCH	DATE DWN 25OCT2013	CHKD	DATE		REV	DESCRIPTION	DATE	CHKD

TITLE	DRAWING NUMBER	REV.
HEATSINK, FAN	14347	1
		SHT. 3/6

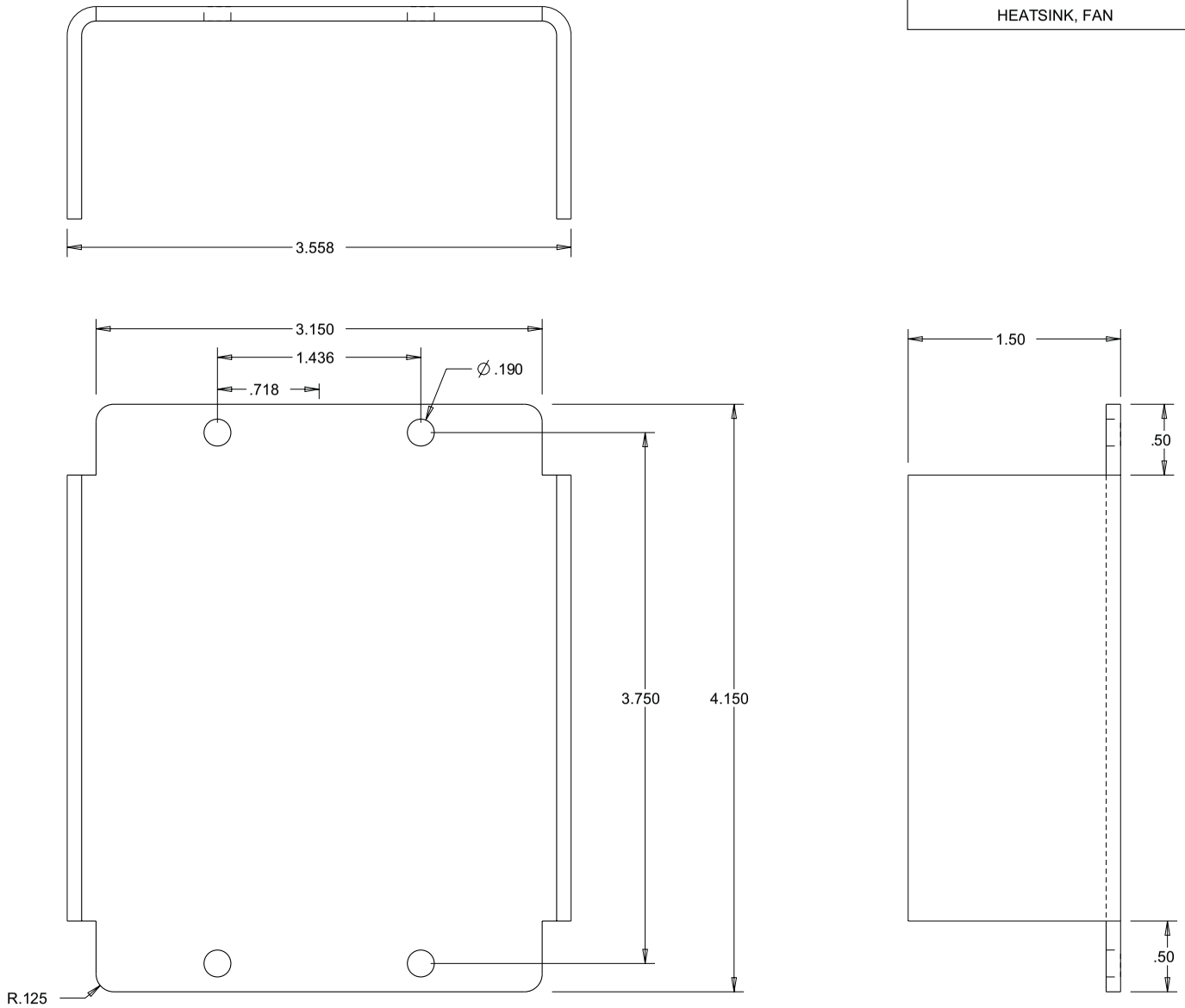

14347-03 OUTER

MATERIAL	SCALE										
AL SHT 10GA(.102) 5052-H32	AS SHOWN	UNLESS OTHERWISE SPECIFIED DIMENSIONS ARE IN INCHES	XX ± 0.03 XXX ± 0.01	ANGLES ± 0.5° OTHER _____	Natural Resources Canada				DWG SIZE	1	PROTOTYPE RELEASE. ECN 2756.	25OCT2013	GCH
					DWN GCH	DATE DWN 25OCT2013	CHKD	DATE	A1	REV	DESCRIPTION	DATE	CHKD

INDEX	PART#	DESCRIPTION	QTY
1	9001-5047	NUT #8-32 SELF-CLINCH SST HDN (.056")	4
2	14347-22	HEATSINK, OUTER	1

TITLE	DRAWING NUMBER	REV.
HEATSINK, FAN	14347	1
		SHT. 4/6

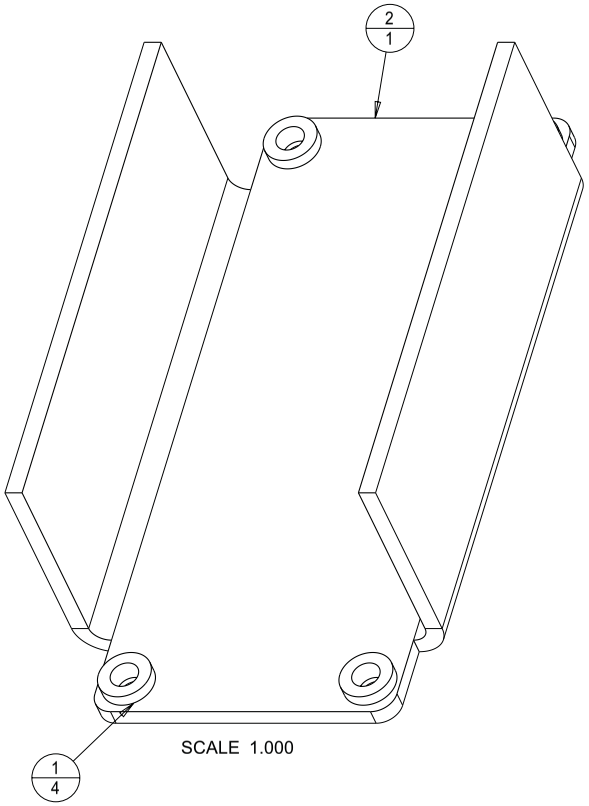

14347-04 OUTER W PEMS

MATERIAL	SCALE										
AS SHOWN	AS SHOWN	UNLESS OTHERWISE SPECIFIED DIMENSIONS ARE IN INCHES	XX ± 0.03 XXX ± 0.01	ANGLES ± 0.5° OTHER _____	Natural Resources Canada				DWG SIZE	1	PROTOTYPE RELEASE. ECN 2756.	25OCT2013	GCH
					DWN GCH	DATE DWN 25OCT2013	CHKD	DATE	A1	REV	DESCRIPTION	DATE	CHKD

TITLE	DRAWING NUMBER	REV. 1
HEATSINK, FAN	14347	SHT. 5/6

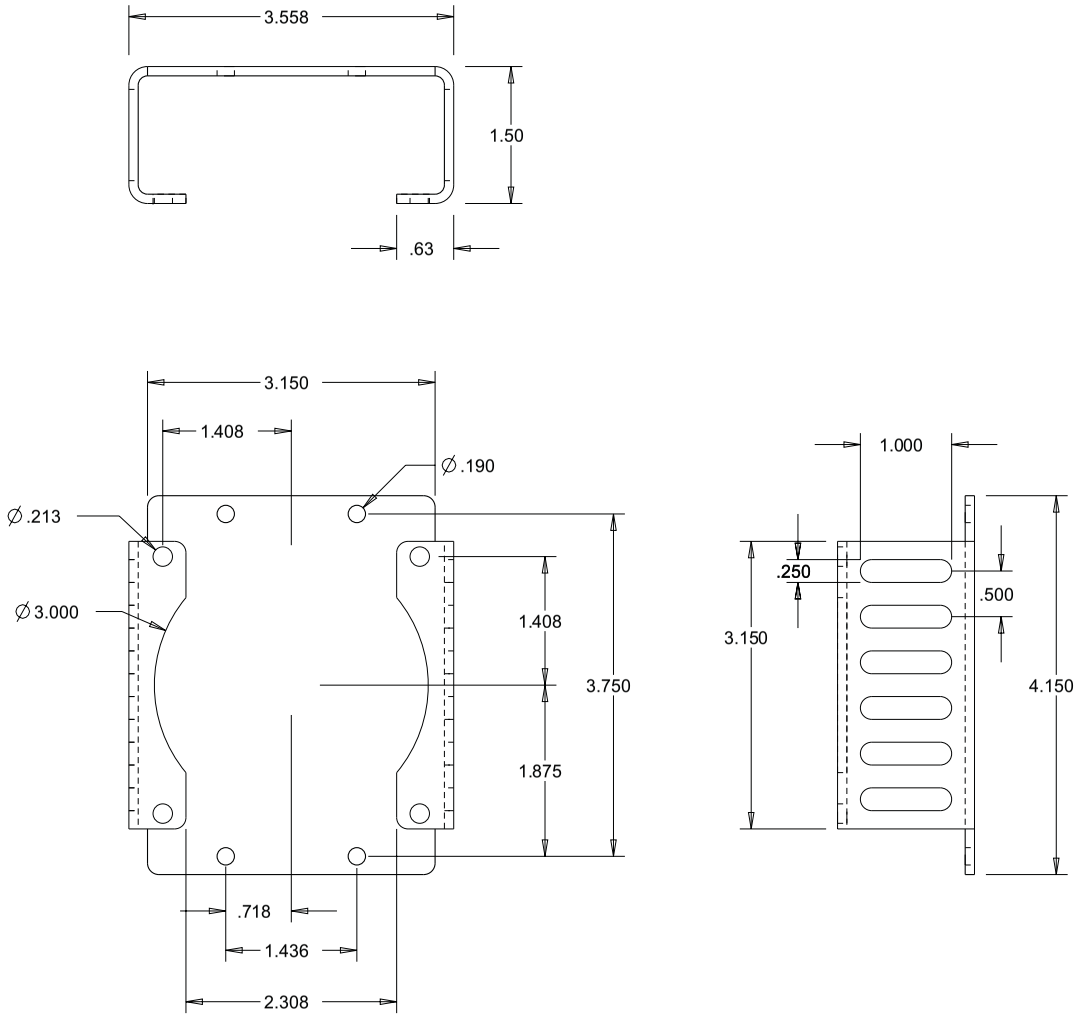

14347-21 INNER/STANDOFF

MATERIAL	SCALE										
AL SHT 10GA(.102) 5052-H32	AS SHOWN	UNLESS OTHERWISE SPECIFIED DIMENSIONS ARE IN INCHES	XX ± 0.03 XXX ± 0.01	ANGLES ± 0.5° OTHER _____	Natural Resources Canada				DWG SIZE A1	1	PROTOTYPE RELEASE. ECN 2756.	25OCT2013	GCH
					DWN GCH	DATE DWN 25OCT2013	CHKD	DATE		REV	DESCRIPTION	DATE	CHKD

TITLE	DRAWING NUMBER	REV.
HEATSINK, FAN	14347	1
		SHT. 6/6

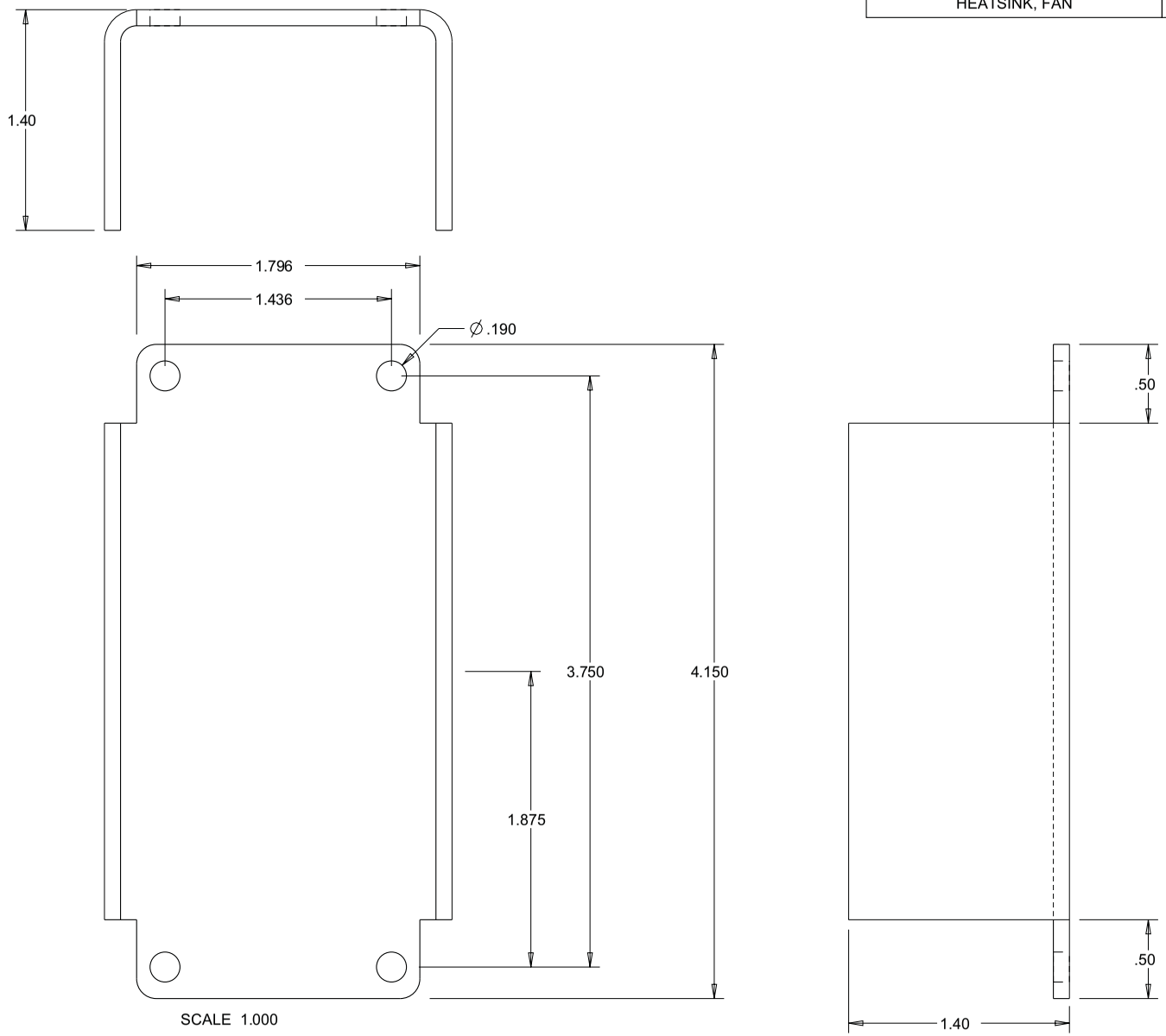

SCALE 1.000

14347-22 OUTER

MATERIAL	SCALE										
AL SHT 10GA(.102) 5052-H32	AS SHOWN	UNLESS OTHERWISE SPECIFIED DIMENSIONS ARE IN INCHES	XX ± 0.03 XXX ± 0.01	ANGLES ± 0.5° OTHER _____	Natural Resources Canada				DWG SIZE A1	1	PROTOTYPE RELEASE. ECN 2756.	25OCT2013	GCH
					DWN GCH	DATE DWN 25OCT2013	CHKD	DATE		REV	DESCRIPTION	DATE	CHKD

TITLE	DRAWING NUMBER	REV.
TRAY, INSTRUMENT 3"HX10WX10DP	14349	1 SHT. 1/1

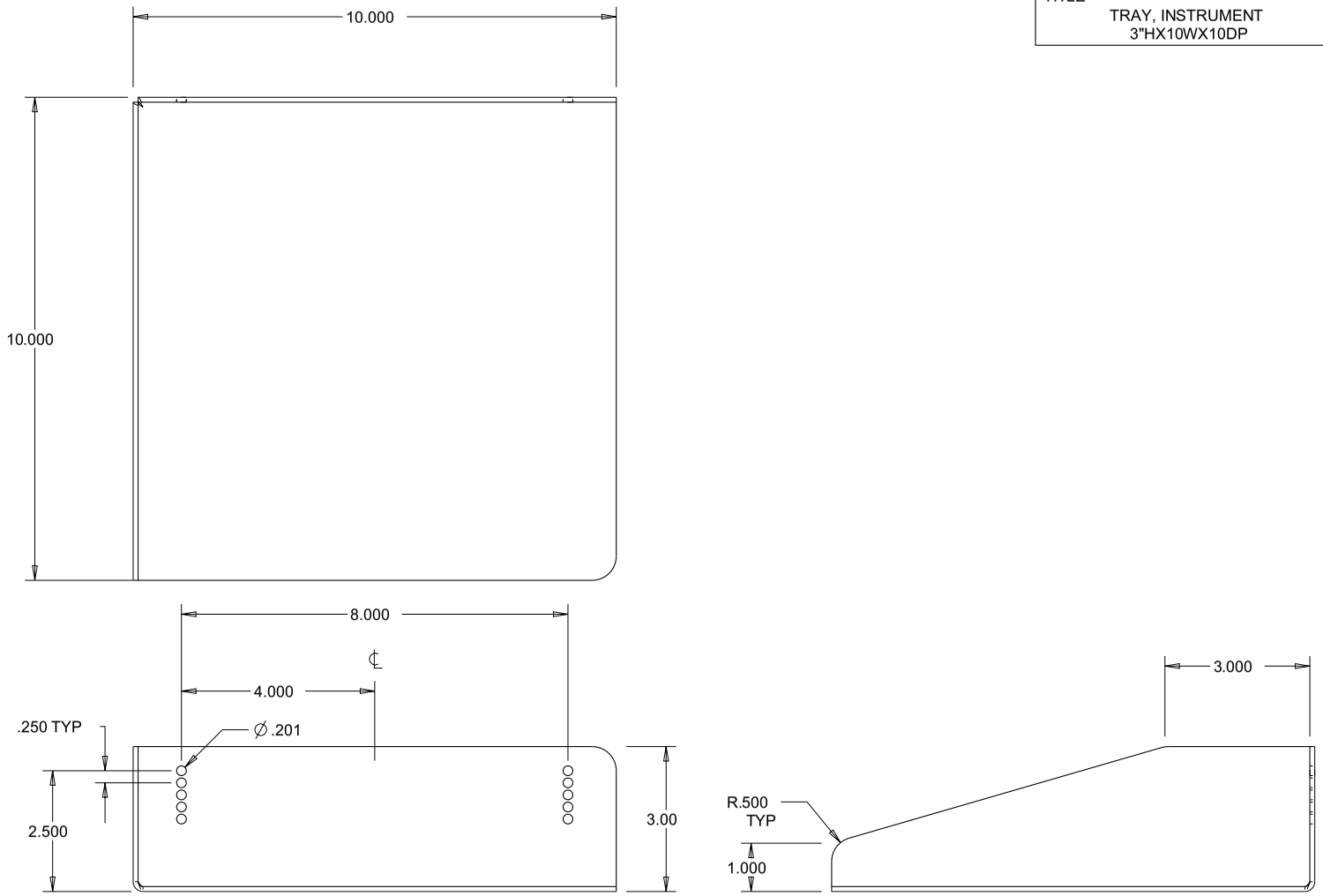

SCALE 0.300

MATERIAL	SCALE										
AL SHT, 10GA(.102) 5052-H32	AS SHOWN	UNLESS OTHERWISE SPECIFIED DIMENSIONS ARE IN INCHES	XX ± 0.03 XXX ± 0.01	ANGLES ± 0.5° OTHER _____	Natural Resources Canada				DWG SIZE	1	PROTOTYPE RELEASE. ECN 2756.	29OCT2013	GCH
					DWN GCH	DATE DWN 29OCT2013	CHKD	DATE	A1	REV	DESCRIPTION	DATE	CHKD

TITLE	DRAWING NUMBER	REV.
HASP, PADLOCK	14350	1
		SHT. 1/1

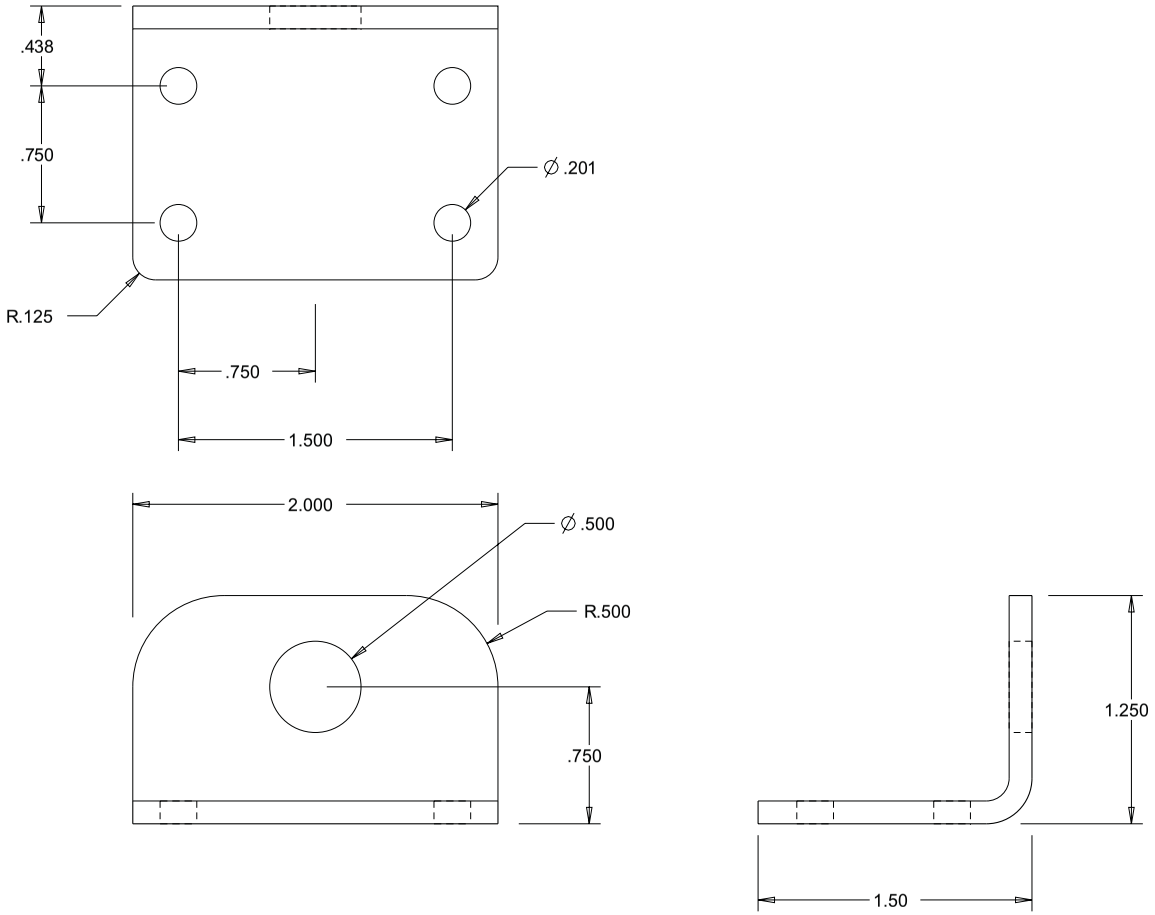

MATERIAL	SCALE										
SST SHT, 11GA(.125)	AS SHOWN	UNLESS OTHERWISE SPECIFIED DIMENSIONS ARE IN INCHES	XX ± 0.03 XXX ± 0.01	ANGLES ± 0.5° OTHER _____	Natural Resources Canada				DWG SIZE	1	PROTOTYPE RELEASE. ECN 2756.	29OCT2013	GCH
					DWN GCH	DATE DWN 29OCT2013	CHKD	DATE	A1	REV	DESCRIPTION	DATE	CHKD

TITLE	DRAWING NUMBER	REV. 3
INSULATION, RIDGID FOAM	14450	SHT. 1/6

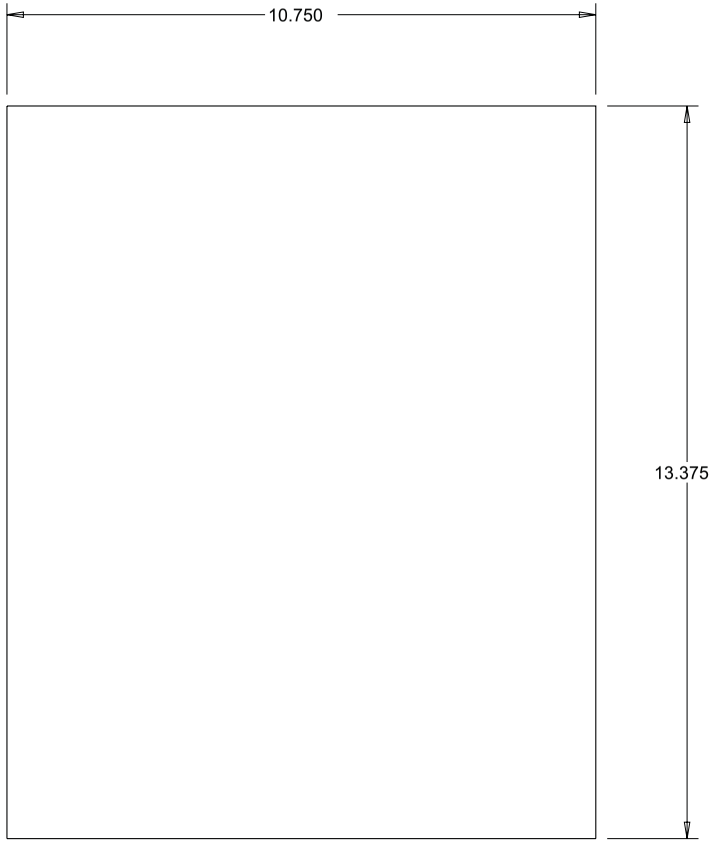

14450-01 TOP HALF

2

SCALE 0.300

MATERIAL	SCALE				Natural Resources Canada				DWG SIZE
.55" THICK EXTRUDED POLYSTYRENE FOAM INSULATION 3	AS SHOWN	UNLESS OTHERWISE SPECIFIED DIMENSIONS ARE IN INCHES	XX ± 0.03 XXX ± 0.01	ANGLES ± 0.5° OTHER _____	DWN GCH	DATE DWN 29OCT2013	CHKD	DATE	A1

REV	DESCRIPTION	DATE	CHKD
3	VARIANT -06 ADDED ON SHT 6. .55 WAS .625. SEE SHTS 2-5 FOR CHANGES, REF ECN 2764	4 DEC 2013	CCB
2	.625 WAS .50.	01NOV2013	GCH
1	PROTOTYPE RELEASE. ECN 2756.	29OCT2013	GCH

TITLE	DRAWING NUMBER	REV. 3
INSULATION, RIDGID FOAM	14450	SHT. 2/6

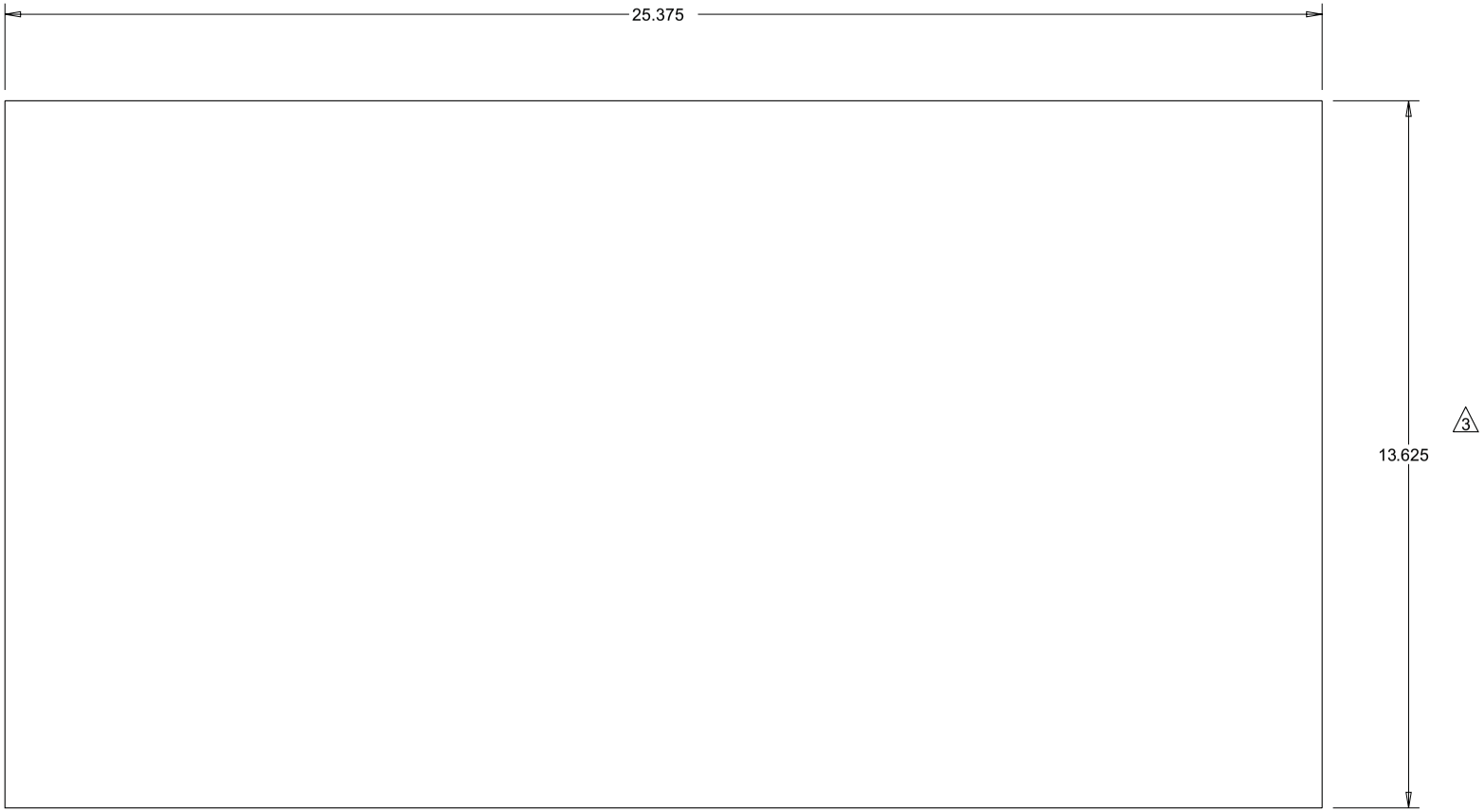

14450-02 SIDE

2

SCALE 0.300

MATERIAL	SCALE									
.55" THICK EXTRUDED POLYSTYRENE FOAM INSULATION 3	AS SHOWN	UNLESS OTHERWISE SPECIFIED DIMENSIONS ARE IN INCHES	XX ± 0.03 XXX ± 0.01	ANGLES ± 0.5° OTHER _____	Natural Resources Canada				DWG SIZE	
					DWN GCH	DATE DWN 29OCT2013	CHKD	DATE	A1	

REV	DESCRIPTION	DATE	CHKD
3	DIM 13.625 WAS 13.750, .55 WAS .625. REF ECN 2764	4 DEC 2013	CCB
2	.625 WAS .50.	01NOV2013	GCH
1	PROTOTYPE RELEASE. ECN 2756.	29OCT2013	GCH

TITLE	DRAWING NUMBER	REV. 3
INSULATION, RIDGID FOAM	14450	SHT. 3/6

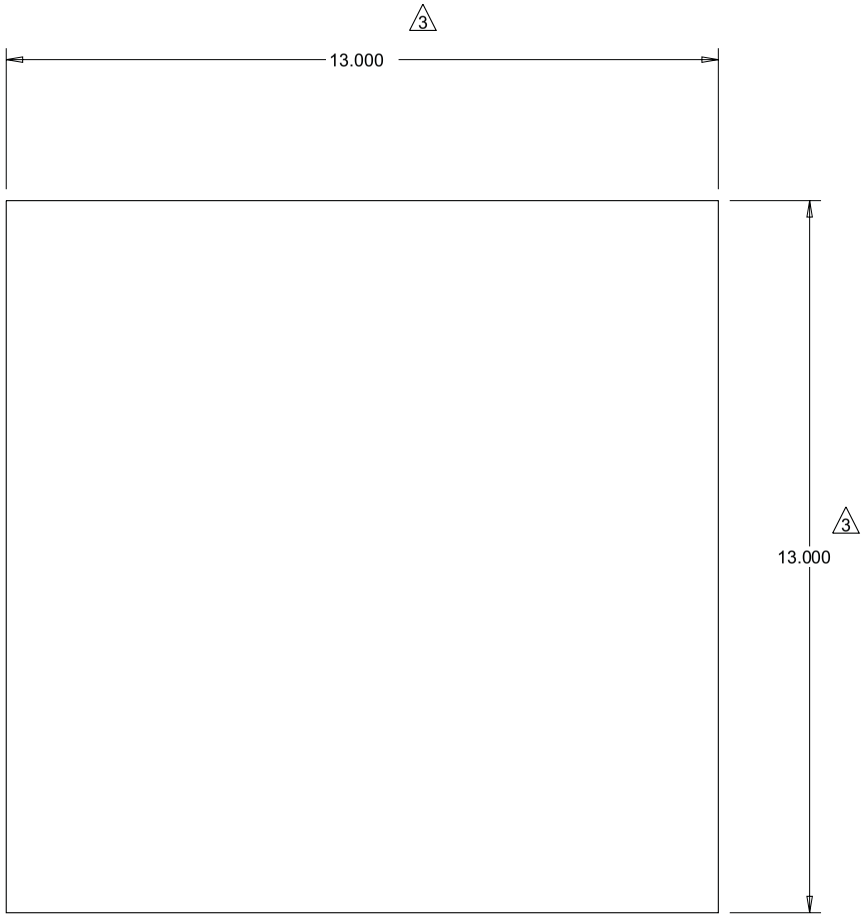

14450-03 BOTTOM

2

SCALE 0.300

3	DIM 13.00 WAS 20.500 DIM 13.000 WAS 13.750, .55 WAS .625. REF ECN 2764	4 DEC 2013	CCB
2	.625 WAS .50.	01NOV2013	GCH
1	PROTOTYPE RELEASE. ECN 2756.	29OCT2013	GCH
REV	DESCRIPTION	DATE	CHKD

MATERIAL
.55" THICK EXTRUDED POLYSTYRENE
FOAM INSULATION
3

SCALE
AS SHOWN

UNLESS OTHERWISE SPECIFIED
DIMENSIONS ARE IN INCHES

XX ± 0.03
XXX ± 0.01

ANGLES ± 0.5°
OTHER _____

Natural Resources Canada

DWN	DATE DWN	CHKD	DATE
GCH	29OCT2013		

DWG SIZE
A1

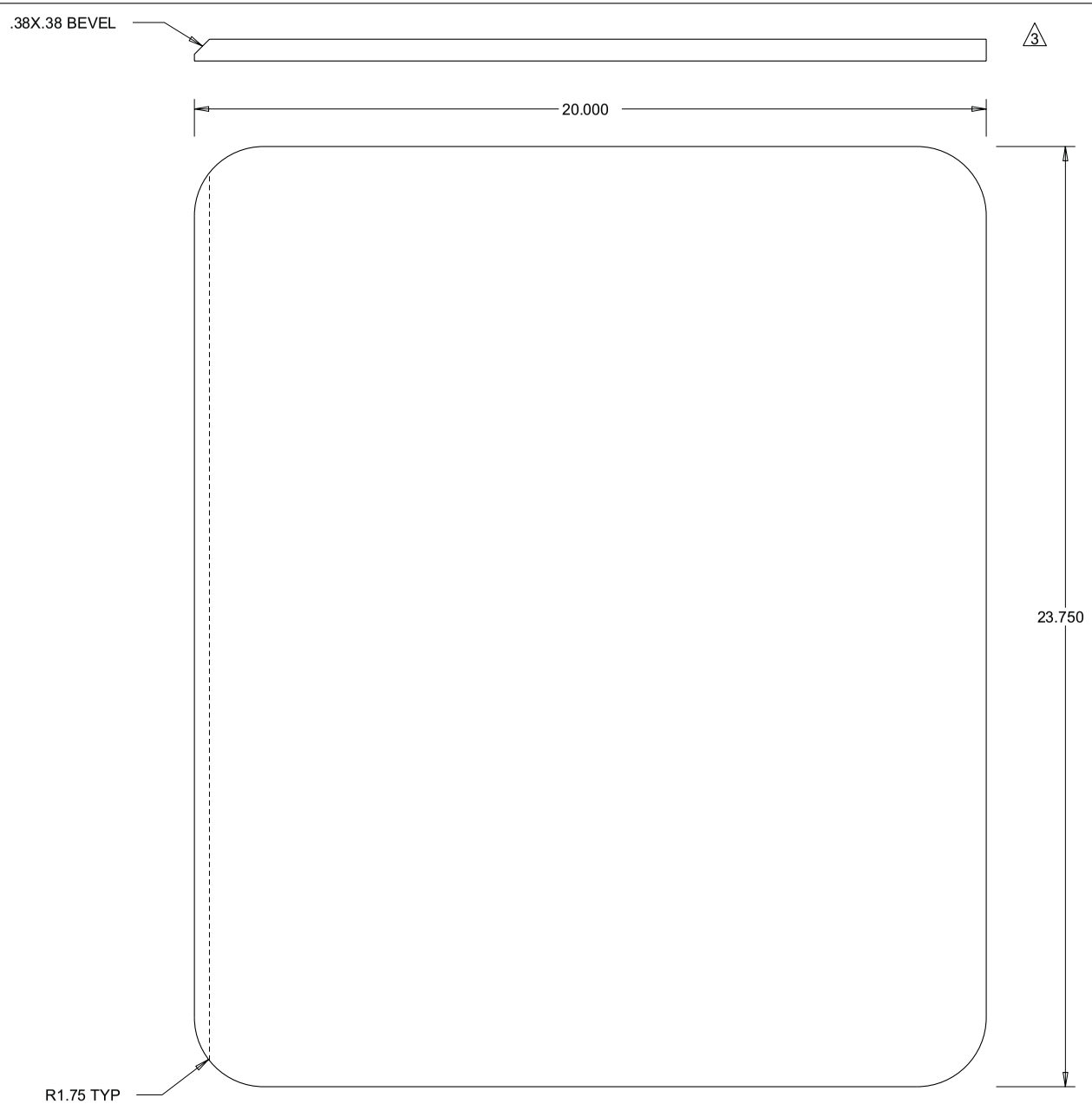

TITLE	DRAWING NUMBER	REV.
INSULATION, RIDGID FOAM	14450	3
		SHT. 4/6

14450-04 DOOR

REV	DESCRIPTION	DATE	CHKD
3	3/8x3/8 BEVEL ADDED, .55 WAS .625 REF ECN 2764	4 DEC 2013	CCB
2	.625 WAS .50.	01NOV2013	GCH
1	PROTOTYPE RELEASE. ECN 2756.	29OCT2013	GCH

MATERIAL
.55" THICK EXTRUDED POLYSTYRENE FOAM INSULATION
3

SCALE
AS SHOWN

UNLESS OTHERWISE SPECIFIED
DIMENSIONS ARE IN INCHES

XX ± 0.03
XXX ± 0.01

ANGLES ± 0.5°
OTHER _____

Natural Resources Canada

DWN	DATE DWN	CHKD	DATE
GCH	29OCT2013		

DWG SIZE
A1

TITLE	DRAWING NUMBER	REV. 3
INSULATION, RIDGID FOAM	14450	SHT. 5/6

14450-05 BACK HALF

2 3

SCALE 0.300

MATERIAL	SCALE								
.55" THICK EXTRUDED POLYSTYRENE FOAM INSULATION 3	AS SHOWN	UNLESS OTHERWISE SPECIFIED DIMENSIONS ARE IN INCHES	XX ± 0.03 XXX ± 0.01	ANGLES ± 0.5° OTHER _____	Natural Resources Canada				DWG SIZE
					DWN GCH	DATE DWN 29OCT2013	CHKD	DATE	A1

REV	DESCRIPTION	DATE	CHKD
3	DIM 10.25 WAS 10.375, MAT'L .55 THK WAS .625, REF ECN 2764	4 DEC 2013	CCB
2	.625 WAS .50.	01NOV2013	GCH
1	PROTOTYPE RELEASE. ECN 2756.	29OCT2013	GCH

TITLE	DRAWING NUMBER	REV. 3
INSULATION, RIDGID FOAM	14450	SHT. 6/6

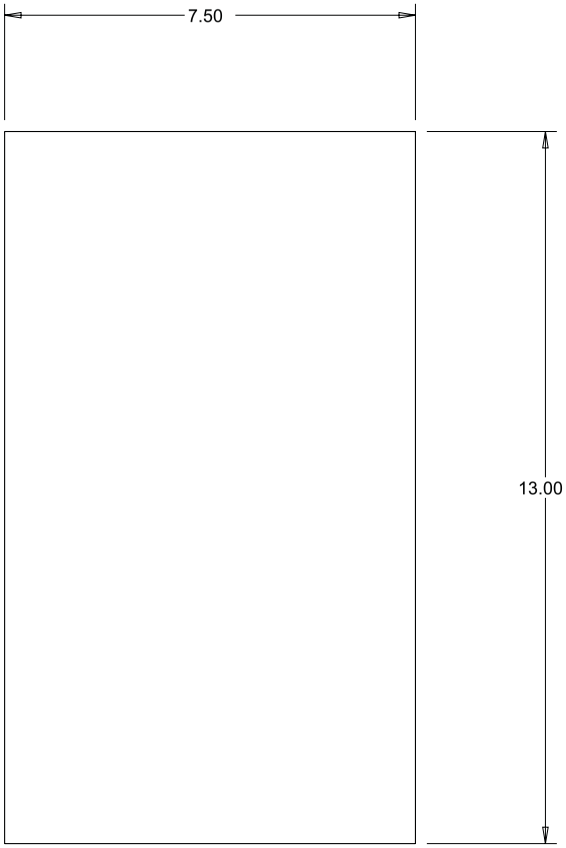

3 14450-06 BOTTOM
TO BE SHIPPED LOOSE

SCALE 0.300

MATERIAL	SCALE										
.55" THICK EXTRUDED POLYSTYRENE FOAM INSULATION 3	AS SHOWN	UNLESS OTHERWISE SPECIFIED DIMENSIONS ARE IN INCHES	XX ± 0.03 XXX ± 0.01	ANGLES ± 0.5° OTHER _____	Natural Resources Canada				DWG SIZE A1	3	8X13 VARIANT -06 ADDED, .55 WAS .625. REF ECN 2764	5 DEC 2013	CCB
					DWN GCH	DATE DWN 29OCT2013	CHKD	DATE		REV	DESCRIPTION	DATE	CHKD

TITLE	DRAWING NUMBER	REV. 2
MNTG ANGLES, POST, AL	14523	SHT. 1/1

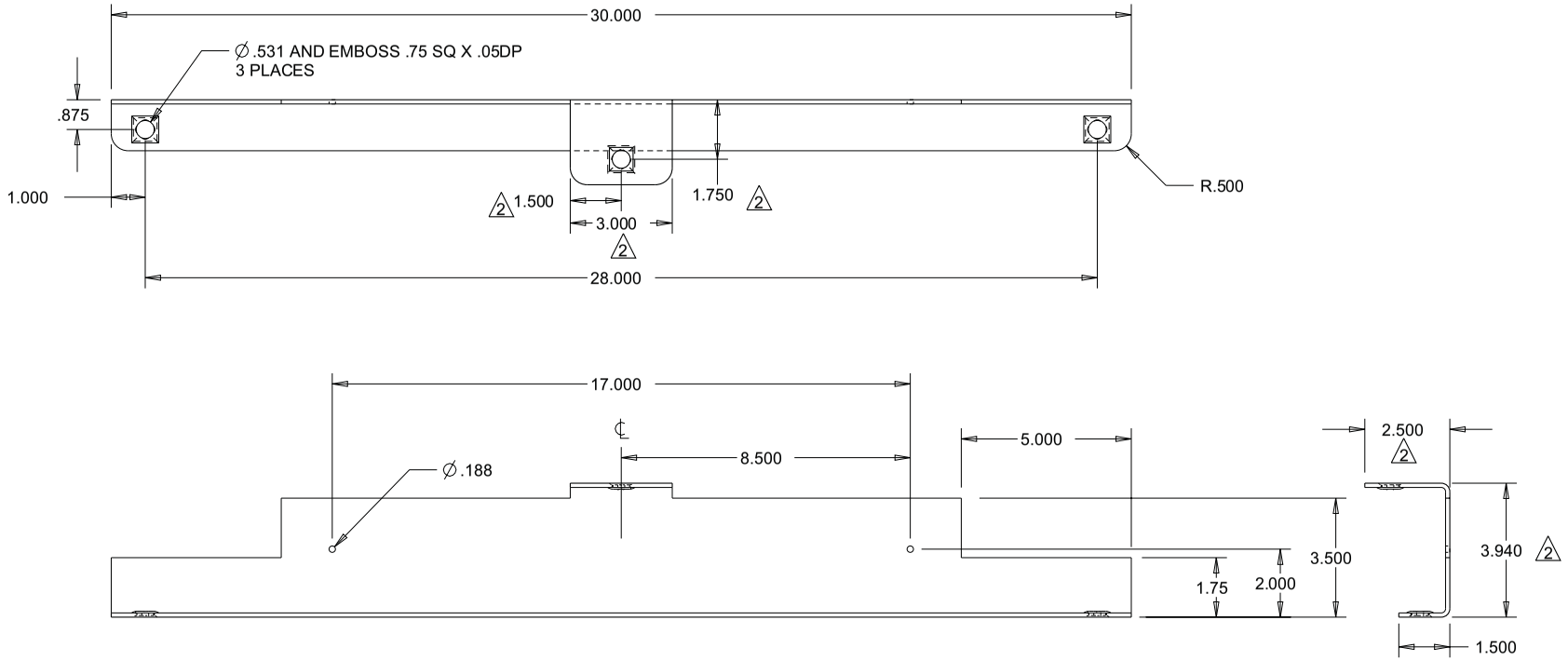

MATERIAL	SCALE											
AL SHT, .125"THK 5052-H32	AS SHOWN	UNLESS OTHERWISE SPECIFIED DIMENSIONS ARE IN INCHES	XX ± 0.03 XXX ± 0.01	ANGLES ± 0.5° OTHER _____	Natural Resources Canada				DWG SIZE A1	2	TAB AND 3RD HOLE ADDED.	01NOV2013	GCH
					DWN GCH	DATE DWN 29OCT2013	CHKD	DATE		1	PROTOTYPE RELEASE. ECN 2756.	29OCT2013	GCH
										REV	DESCRIPTION	DATE	CHKD

INDEX	PART#	DESCRIPTION	QTY
1	9004-0030	RIVET .188" .13-.25" POP AL CLOSED END	10
2	14524-21	TOP, SUN SHADE	1
3	14524-22	SIDE PANEL, RIGHT, SUN SHADE	1
4	14524-23	SIDE PANEL, LEFT, SUN SHADE	1

TITLE	DRAWING NUMBER	REV.
SUN SHADE, POST MNT BOX	14524	1
		SHT. 1/3

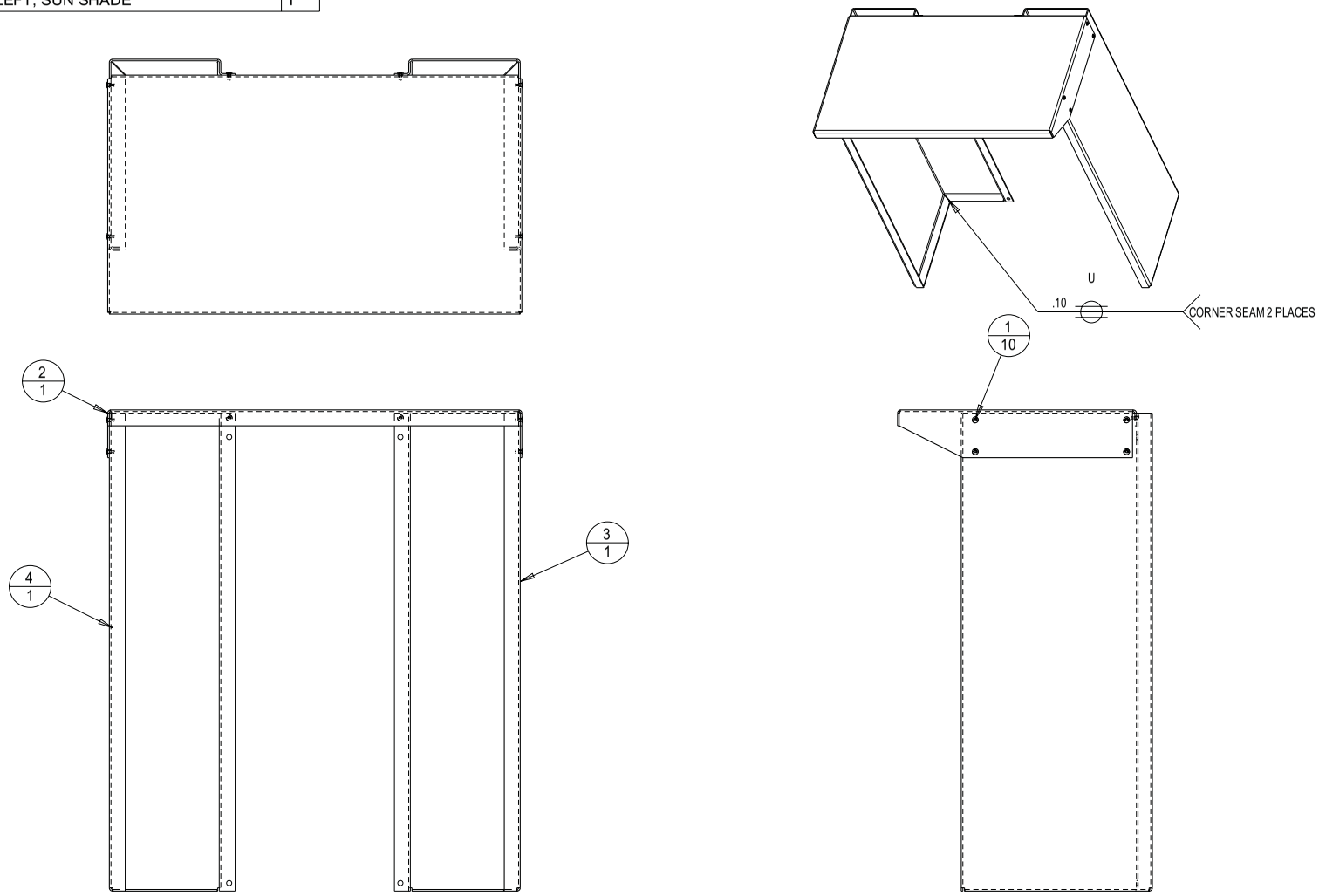

SCALE 0.100

MATERIAL	SCALE										
AS SHOWN	AS SHOWN	UNLESS OTHERWISE SPECIFIED DIMENSIONS ARE IN INCHES	XX ± 0.03 XXX ± 0.01	ANGLES ± 0.5° OTHER _____	Natural Resources Canada				DWG SIZE	1	PROTOTYPE RELEASE. ECN 2756.	01NOV2013	GCH
					DWN GCH	DATE DWN 01NOV2013	CHKD	DATE	A1	REV	DESCRIPTION	DATE	CHKD

TITLE	DRAWING NUMBER	REV. 1
SUN SHADE, POST MNT BOX	14524	SHT. 2/3

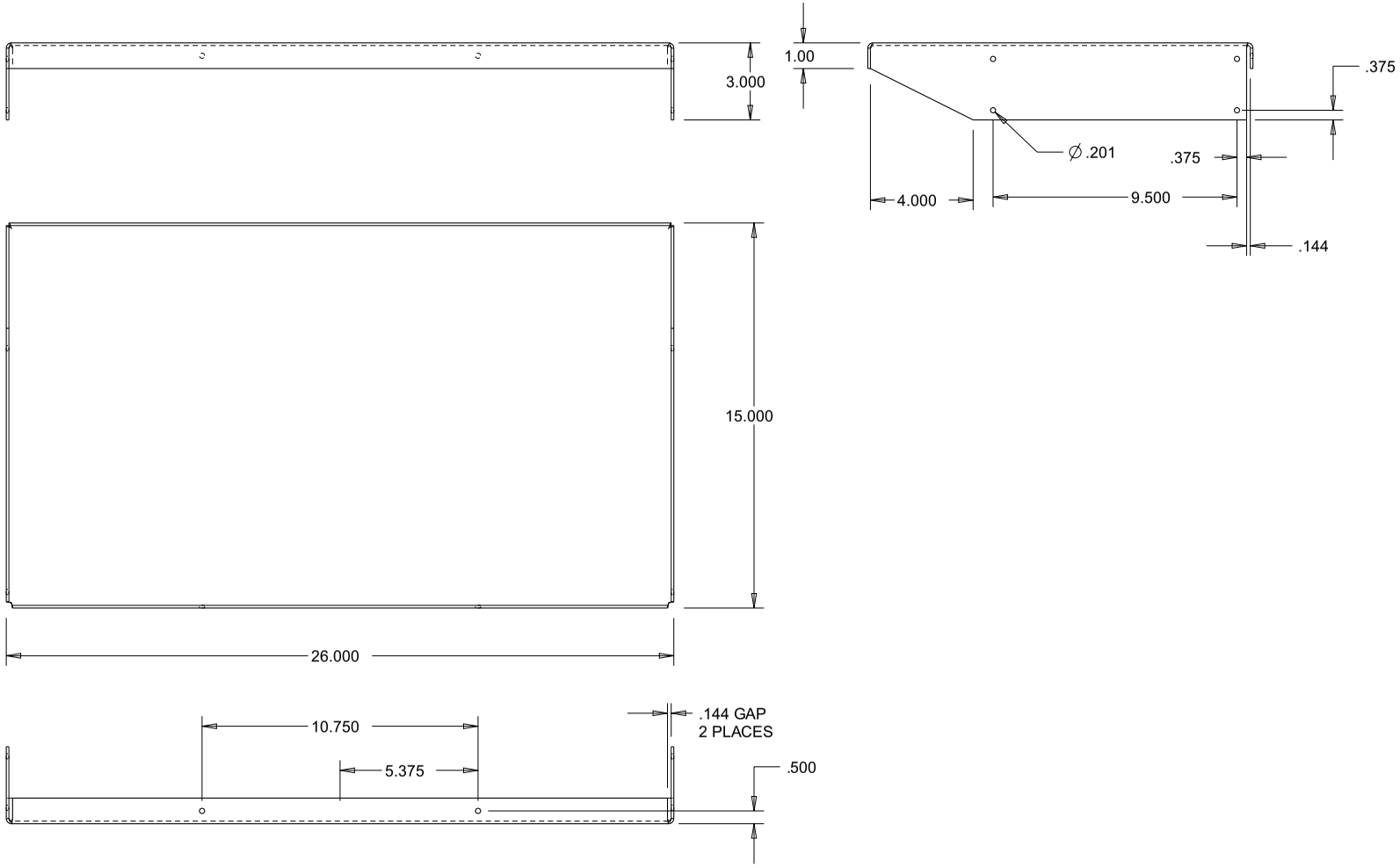

MATERIAL	SCALE										
AL SHT, 10GA(.102), 5052-H32	AS SHOWN	UNLESS OTHERWISE SPECIFIED DIMENSIONS ARE IN INCHES	XX ± 0.03 XXX ± 0.01	ANGLES ± 0.5° OTHER _____	Natural Resources Canada				DWG SIZE	1	PROTOTYPE RELEASE. ECN 2756.	01NOV2013	GCH
					DWN GCH	DATE DWN 01NOV2013	CHKD	DATE	A1	REV	DESCRIPTION	DATE	CHKD

TITLE	DRAWING NUMBER	REV. 1
SUN SHADE, POST MNT BOX	14524	SHT. 3/3

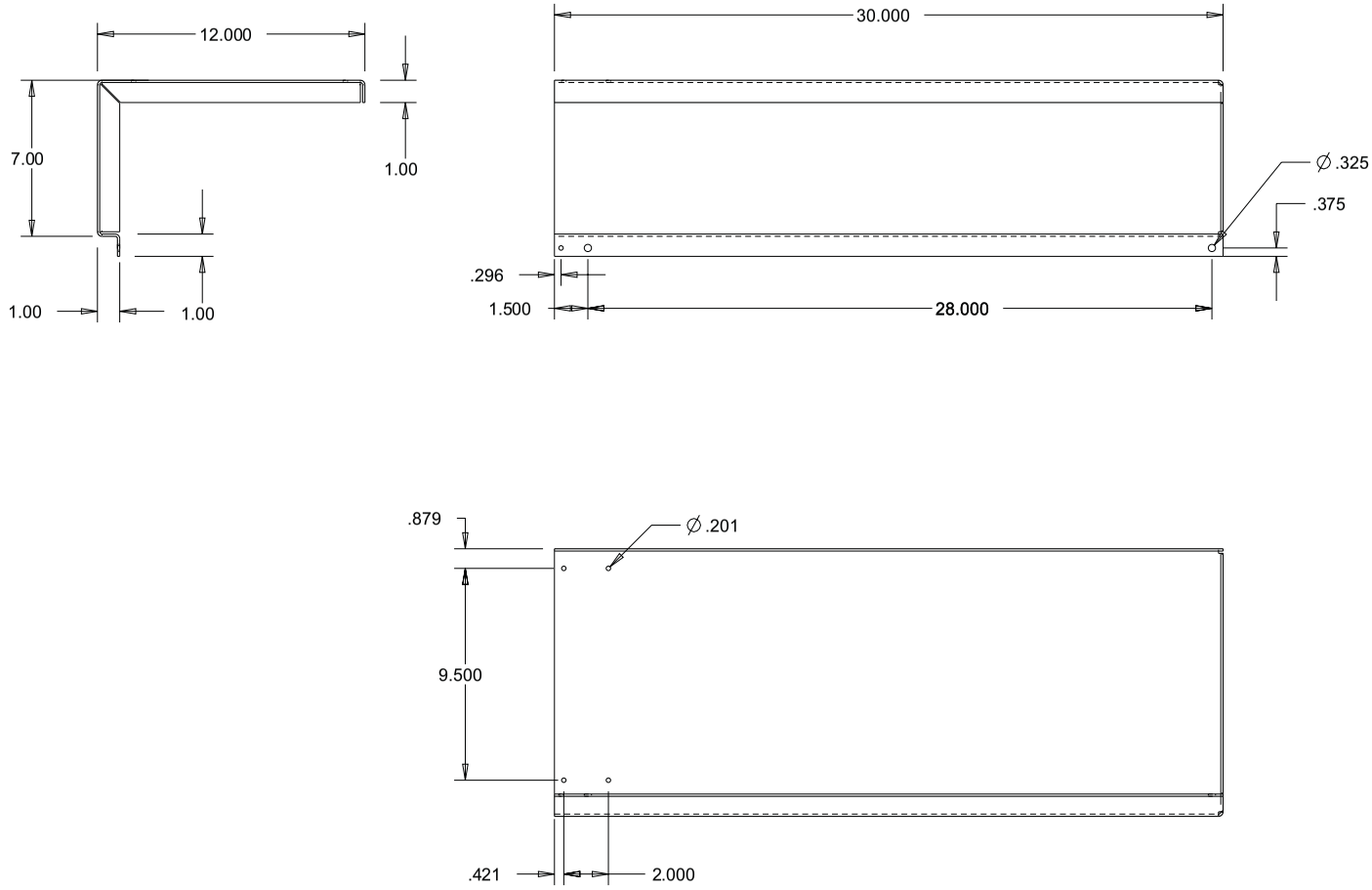

14524-22 SHOWN
14524-23 REVERSE BENDS

MATERIAL	SCALE										
AL SHT, 10GA(.102), 5052-H32	AS SHOWN	UNLESS OTHERWISE SPECIFIED DIMENSIONS ARE IN INCHES	XX ± 0.03 XXX ± 0.01	ANGLES ± 0.5° OTHER _____	Natural Resources Canada				DWG SIZE A1		PROTOTYPE RELEASE. ECN 2756.	01NOV2013	GCH
					DWN GCH	DATE DWN 01NOV2013	CHKD	DATE		REV	DESCRIPTION	DATE	CHKD

INDEX	PART#	DESCRIPTION	QTY
1	14542	FORM, 3/4" PLYWOOD, 1/2" BOLT, 8"X8" CENTRES	1
2	MCMASTER_CARR_91603A150	Hot-Dipped Galvanized Steel L-Hook Anchor Bolt, 1/2"=13 X 8"LG	4
3	MCMASTER_CARR_91694A315	Grade Dh Steel Heavy Hex Structural Nut, Hot-Dipped Galvanized, 1/2"-13 Thread	8
4	MCMASTER_CARR_98970A133	Hot Dipped Galvanized Steel Flat Washer, USS, 1/2" I/D, 1-3/8" OD, .08"-.14THK	8

TITLE	DRAWING NUMBER	REV.
FOUNDATION HDWR, AC KIT	14541	A
		SHT. 1/1

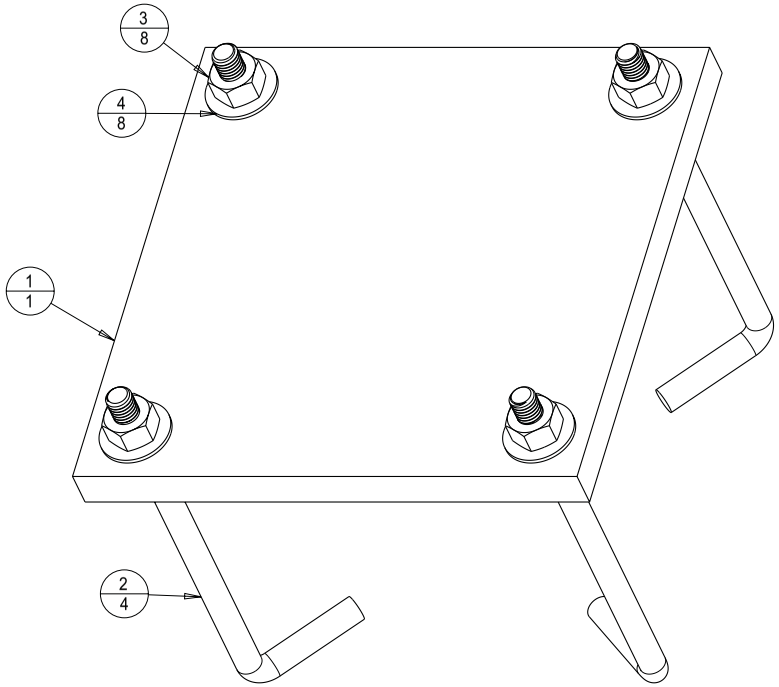

SCALE 0.300

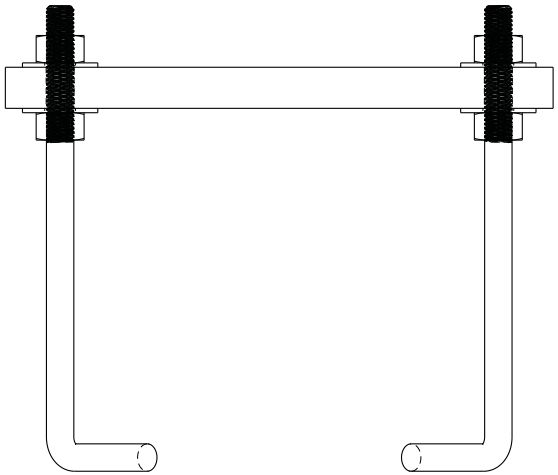

SCALE 0.300

MATERIAL	SCALE										
AS SHOWN	AS SHOWN	UNLESS OTHERWISE SPECIFIED DIMENSIONS ARE IN INCHES	XX ± 0.03 XXX ± 0.01	ANGLES ± 0.5° OTHER _____	Natural Resources Canada				DWG SIZE	A	CREATED. ECN 2764.	13JAN2014	GCH
					DWN GCH	DATE DWN 13JAN2014	CHKD	DATE	A1	REV	DESCRIPTION	DATE	CHKD

TITLE	DRAWING NUMBER	REV.
FORM, 3/4" PLYWOOD, 1/2" BOLT, 8"X8" CENTRES	14542	1
		SHT. 1/1

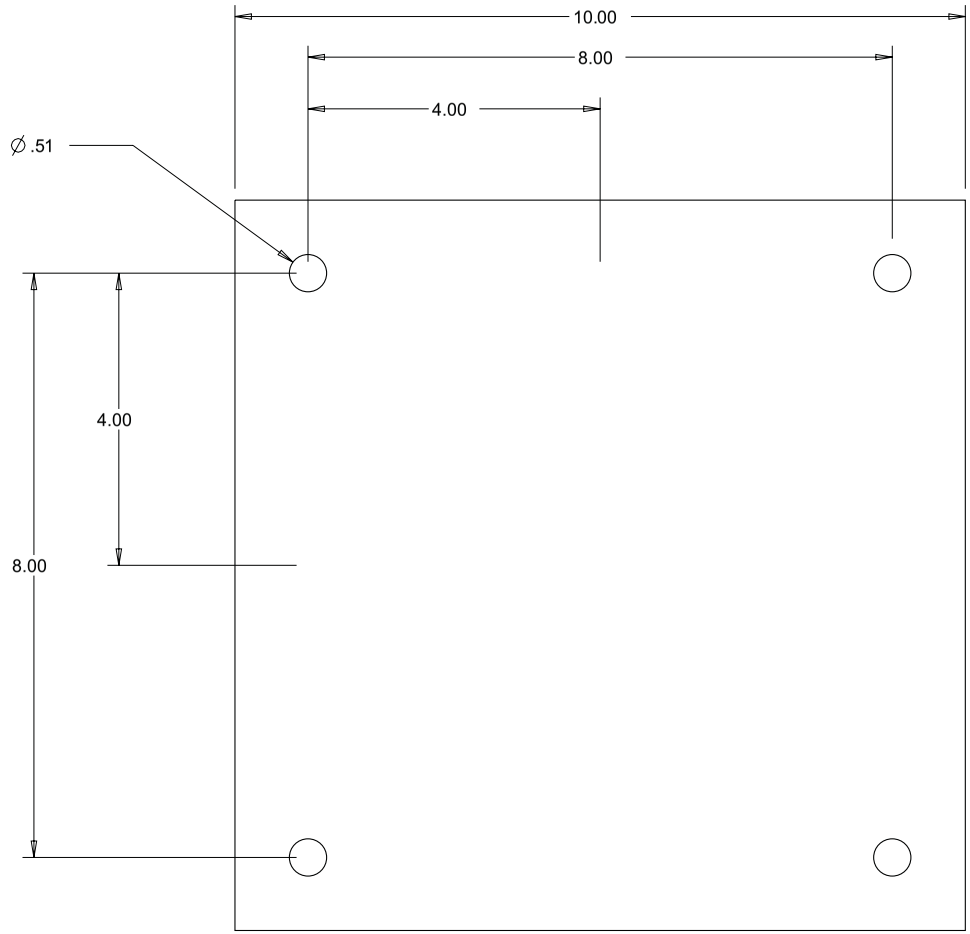

SCALE 0.400

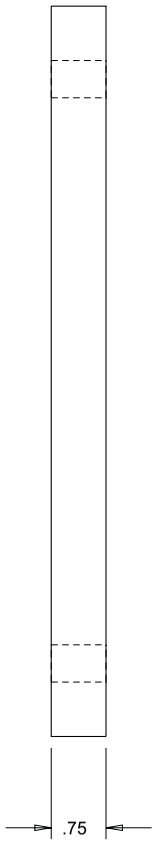

MATERIAL	SCALE										
STD PLYWOOD, 3/4" THICK	AS SHOWN	UNLESS OTHERWISE SPECIFIED DIMENSIONS ARE IN INCHES	XX ± 0.03 XXX ± 0.01	ANGLES ± 0.5° OTHER _____	Natural Resources Canada				DWG SIZE	1	PROTOTYPE RELEASE. ECN 2764.	30JAN2014	GCH
					DWN GCH	DATE DWN 30JAN2014	CHKD	DATE	A1	REV	DESCRIPTION	DATE	CHKD

INDEX	PART#	DESCRIPTION	QTY	
1	9019-0042	CONDUIT, FLEX, 3/4" LIQ-TIGHT, ARMOURED	1	
2	9019-1018	WSHR, SEALING RING 3/4"DIA METAL LIQ-TIT	1	
3	SCEPTER_TSRC15	STRAIN RELIEF CONNECTOR, 3/4 NPT THREAD PVC	1	
4	THOMAS_AND_BETTS_5233AL	CONN, LIQ-TITE, 3/4" STRAIGHT, AL	2	
	AIR802 PART NUMBER CA195-B-TNPTNP-020F	COAXIAL CABLE, CA195, TNC PLUG MALE BOTH ENDS, 20' LG	1	NOT SHOWN

TITLE	DRAWING NUMBER	REV.
HARNESS AC KIT, GEOPHYSICAL STATION	14550	A SHT. 1/3

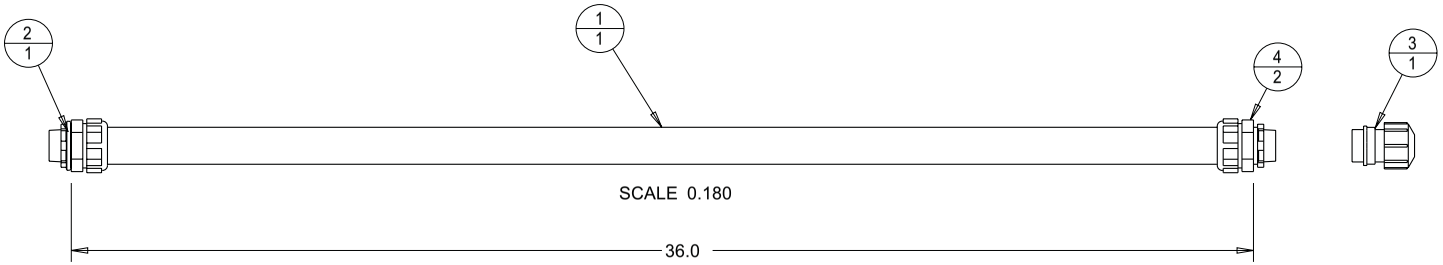

14550-01
YAGI ANTENNA HARNESS

REV	DESCRIPTION	DATE	CHKD
A	AL CONDUIT FITTINGS WERE STEEL.	11FEB2014	GCH
1	PROTOTYPE RELEASE. ECN2764.	14JAN2014	GCH

MATERIAL	SCALE							
AS SHOWN	AS SHOWN	UNLESS OTHERWISE SPECIFIED DIMENSIONS ARE IN INCHES	XX ± 0.03 XXX ± 0.01	ANGLES ± 0.5° OTHER _____	Natural Resources Canada			DWG SIZE
					DWN GCH	DATE DWN 14JAN2014	CHKD	DATE	A1

INDEX	PART#	DESCRIPTION	QTY	
1	9019-0042	CONDUIT, FLEX, 3/4" LIQ-TIGHT, ARMOURED	1	
2	9019-1018	WSHR, SEALING RING 3/4"DIA METAL LIQ-TIT	1	
3	THOMAS_AND_BETTS_5233AL	CONN, LIQ-TITE, 3/4" STRAIGHT, AL	2	
	AIR802 PART NUMBER CA195-B-TNPTNP-015F	COAXIAL CABLE, CA195, TNC PLUG MALE BOTH ENDS, 15' LG	1	NOT SHOWN

TITLE	DRAWING NUMBER	REV.
HARNESS AC KIT, GEOPHYSICAL STATION	14550	A SHT. 2/3

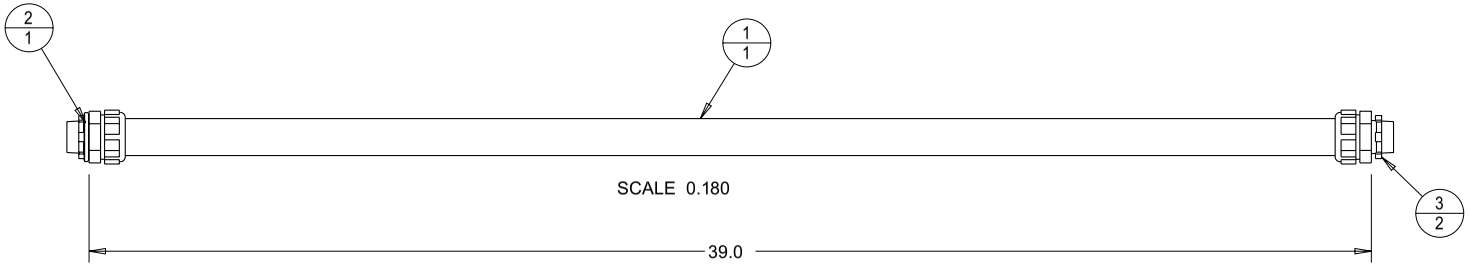

14550-02
GPS ANTENNA HARNESS

REV	DESCRIPTION	DATE	CHKD
A	AL CONDUIT FITTINGS WERE STEEL.	11FEB2014	GCH
1	PROTOTYPE RELEASE. ECN 2764.	14JAN2014	GCH

MATERIAL	SCALE							
AS SHOWN	AS SHOWN	UNLESS OTHERWISE SPECIFIED DIMENSIONS ARE IN INCHES	XX ± 0.03 XXX ± 0.01	ANGLES ± 0.5° OTHER _____	Natural Resources Canada			DWG SIZE
					DWN GCH	DATE DWN 14JAN2014	CHKD	DATE	A1

INDEX	PART#	DESCRIPTION	QTY
1	9019-0042	CONDUIT, FLEX, 3/4" LIQ-TIGHT, ARMOURED	1
2	9019-1018	WSHR, SEALING RING 3/4"DIA METAL LIQ-TIT	1
3	LEVITON_101-EP	15 Amp, 125 Volt, NEMA 1-15P, 2P, 2W, Plug, Straight Blade, Polarized, No Grnd	1
4	THOMAS_AND_BETTS_5233AL	CONN, LIQ-TITE, 3/4" STRAIGHT, AL	1
5	THOMAS_AND_BETTS_5353AL	CONN, LIQ-TITE, 3/4" 90 DEG, AL	1

TITLE	DRAWING NUMBER	REV.
HARNESS AC KIT, GEOPHYSICAL STATION	14550	A SHT. 3/3

ITEM	GAGE (AWG)	COLOUR	WIRE#	LETTER	LENGTH (")	FROM	TERMINAL	STRIP	TO	TERMINAL	STRIP	NOTE
1	10	GREEN	GND		100	GND INSTRUMENT BOX		.50	GND BATTERY BOX		.50	
2	10	RED	21	E	112	BATT, CHARGER - POS-3		.50	40 AMP BREAKER		.50	
3	10	BLK	20	E	120	BATT, CHARGER - NEG		.50	NEGATIVE CONN		.50	
4	18	BLK	2	C	80	LEVITON PLUG 101-EP "LINE"		.25	HEATER - 2		.25	
5	18	WHT	1	C	80	LEVITON PLUG 101-EP "NEUTRAL"		.25	HEATER - 1		.25	

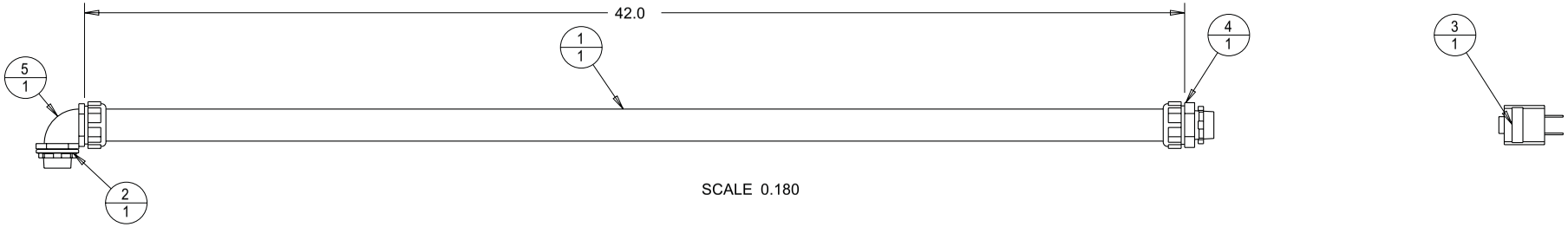

14550-03
BATTERY HARNESS

REV	DESCRIPTION	DATE	CHKD
A	AL CONDUIT FITTINGS WERE STEEL.	11FEB2014	GCH
1	PROTOTYPE RELEASE. ECN 2764.	14JAN2014	GCH

MATERIAL	SCALE								
AS SHOWN	AS SHOWN	UNLESS OTHERWISE SPECIFIED DIMENSIONS ARE IN INCHES	XX ± 0.03 XXX ± 0.01	ANGLES ± 0.5° OTHER _____	Natural Resources Canada				DWG SIZE A1
					DWN GCH	DATE DWN 14JAN2014	CHKD	DATE	

TITLE	DRAWING NUMBER	REV.
GSKT, 4X4"X.25"THK,SI,4 BOLT	14634	A
		SHT. 1/1

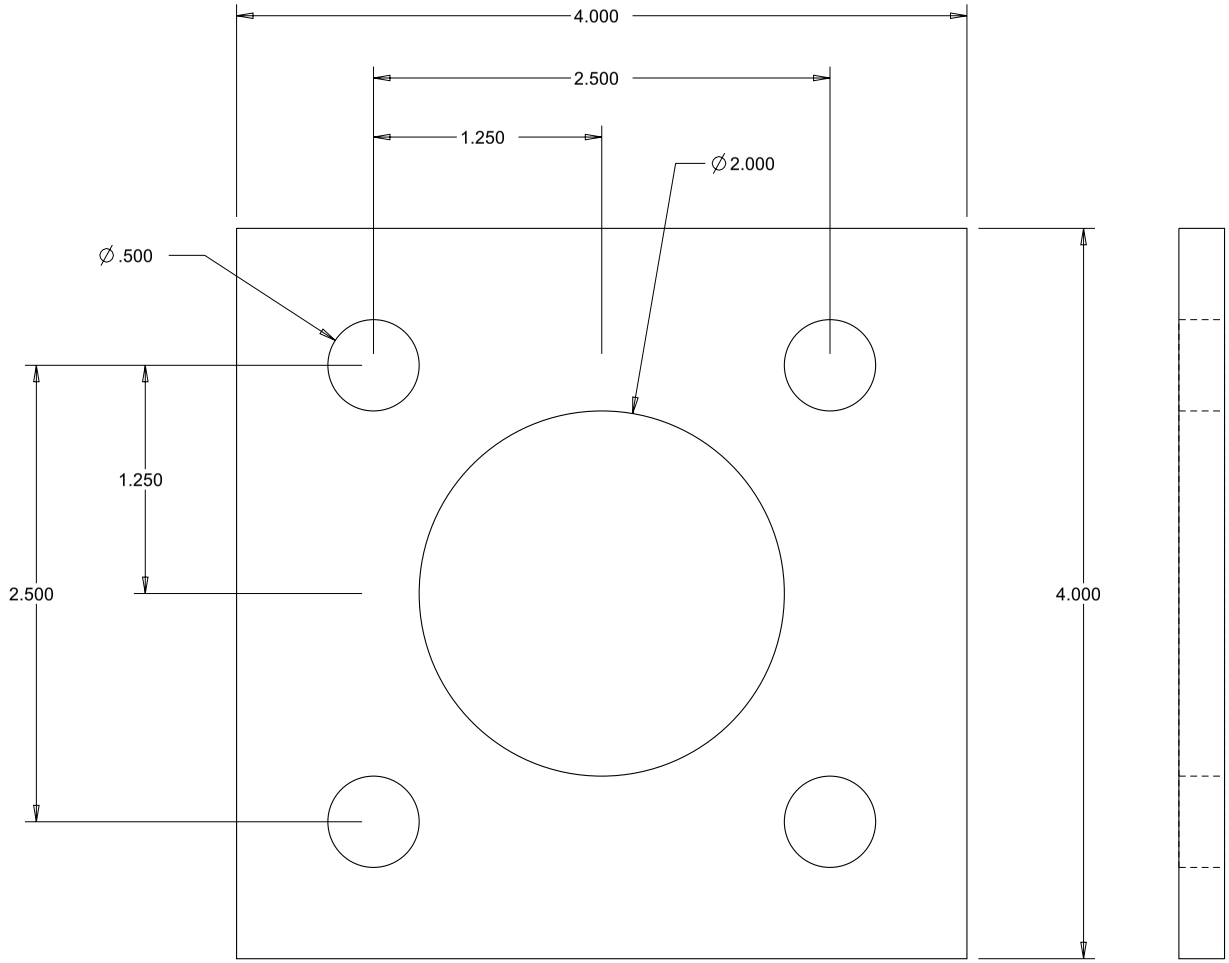

SCALE 1.000

MATERIAL	SCALE										
SILICONE RBR, .25"THK, SOLID, 60 DURO	AS SHOWN	UNLESS OTHERWISE SPECIFIED DIMENSIONS ARE IN INCHES	XX ± 0.03 XXX ± 0.01	ANGLES ± 0.5° OTHER _____	Natural Resources Canada				DWG SIZE	A	PRODUCTION RELEASE. ECN 2782.	25MAR2014	GCH
					DWN GCH	DATE DWN 25MAR2014	CHKD	DATE	A1	REV	DESCRIPTION	DATE	CHKD

TITLE	DRAWING NUMBER	REV.
HASP, PADLOCK WITH BOLT NRCAN	18665	A SHT. 1/1

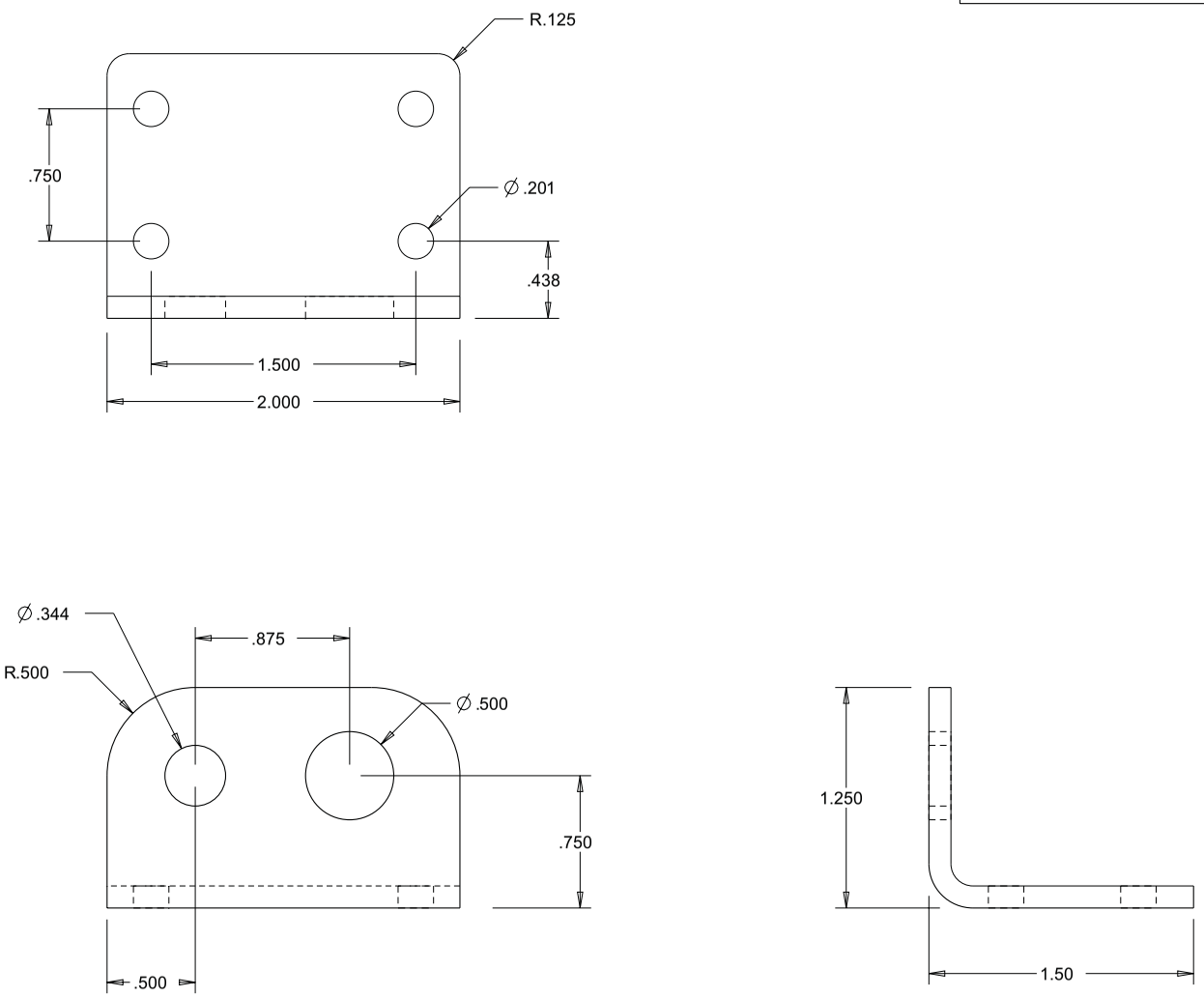

MATERIAL	SCALE											
SST SHT, 11GA(.125)	AS SHOWN	UNLESS OTHERWISE SPECIFIED DIMENSIONS ARE IN INCHES	XX ± 0.03 XXX ± 0.01	ANGLES ± 0.5° OTHER _____	*Natural Resources Canada*				DWG SIZE	A	P/N 18665 WAS 18865, NON-ECN	9 DEC 15	CCB
					DWN GCH	DATE DWN 12NOV2015	CHKD	DATE	A1	A	PROTOTYPE RELEASE. ECN 2921	12NOV2015	GCH
										REV	DESCRIPTION	DATE	CHKD

TITLE	DRAWING NUMBER	REV. 2
CONDUIT / COVER PLATE	19045	SHT. 1/4

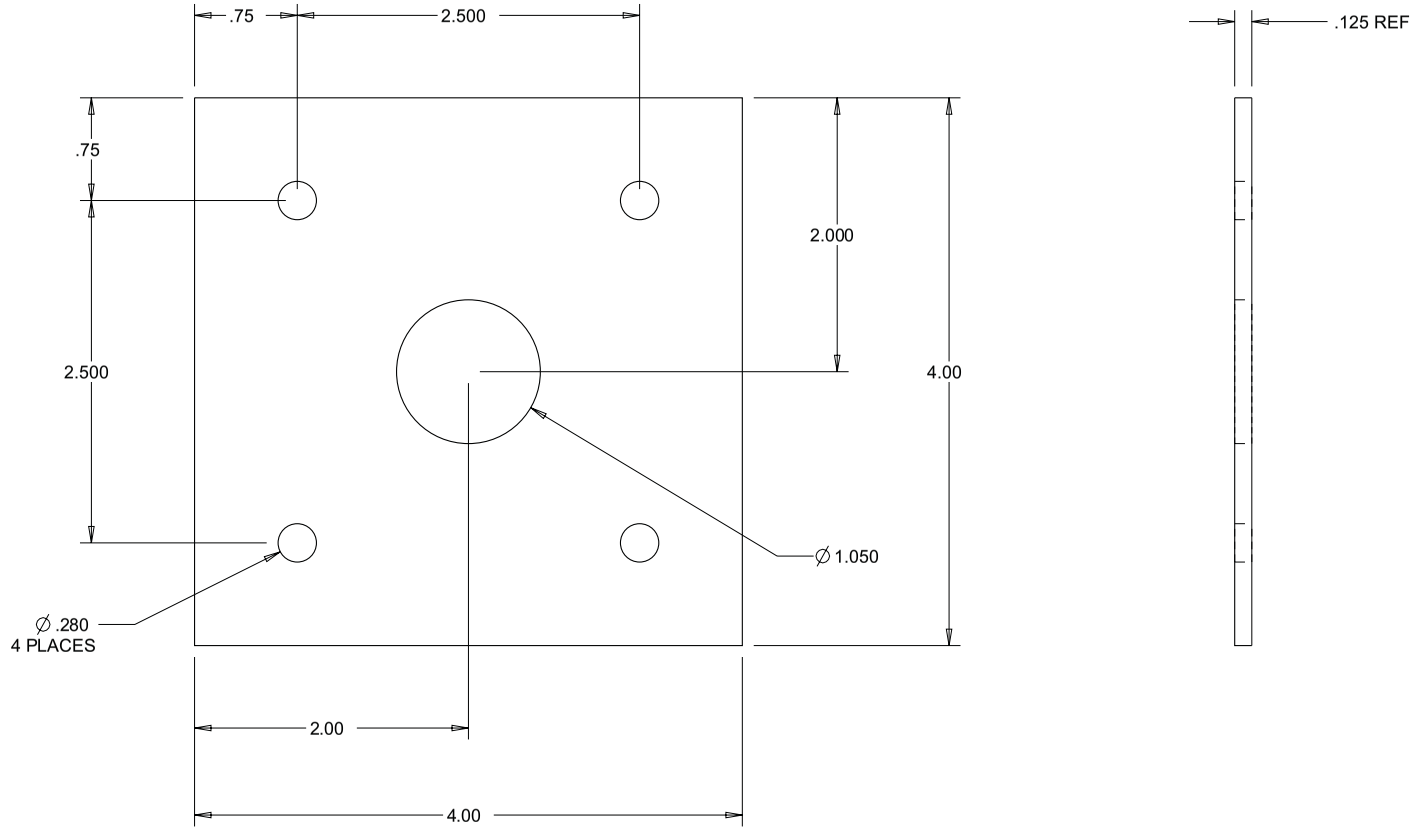

19045-01
CONDUIT PLATE, 3/4 PIPE

SCALE 0.750

MATERIAL	SCALE												
.125 THK ALUMINIUM 5052-H32	AS SHOWN	UNLESS OTHERWISE SPECIFIED DIMENSIONS ARE IN INCHES	XX ± 0.03 XXX ± 0.01	ANGLES ± 0.5° OTHER _____	Natural Resources Canada				DWG SIZE A1	2	SEE SHT 4 FOR CHANGES REF ECN 2731	4 JUL 2013	CCB
					DWN CCB	DATE DWN 25JUN2013	CHKD	DATE		1	PROTOTYPE RELEASE, REF ECN 2731	25JUNE2013	CCB
										REV	DESCRIPTION	DATE	CHKD

TITLE	DRAWING NUMBER	REV. 2
CONDUIT / COVER PLATE	19045	SHT. 2/4

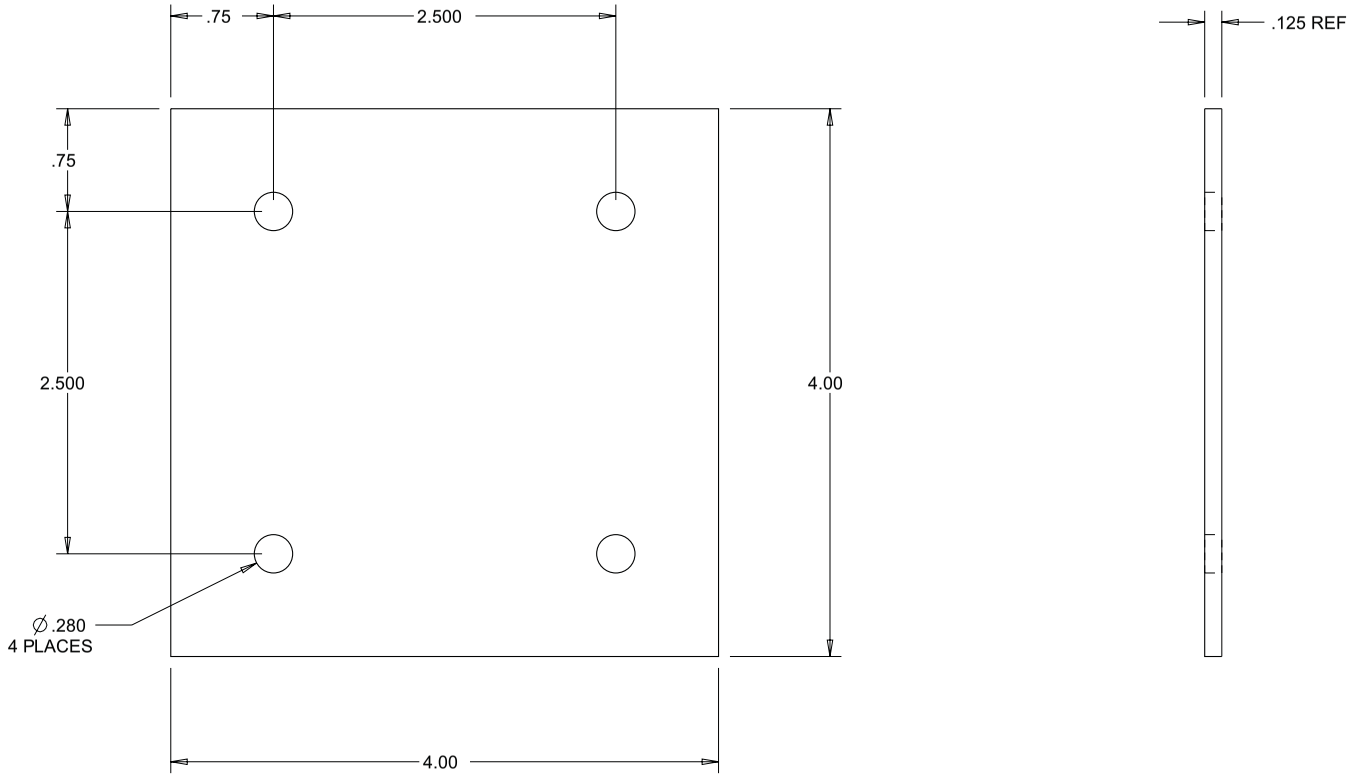

19045-02
COVER PLATE

SCALE 0.750

MATERIAL	SCALE											
.125 THK ALUMINIUM 5052-H32	AS SHOWN	UNLESS OTHERWISE SPECIFIED DIMENSIONS ARE IN INCHES	XX ± 0.03 XXX ± 0.01	ANGLES ± 0.5° OTHER _____	Natural Resources Canada				DWG SIZE A1	2	SEE SHT 4 FOR CHANGES REF ECN 2731	4 JUL 2013	CCB
					DWN CCB	DATE DWN 25JUN2013	CHKD	DATE		1	PROTOTYPE RELEASE, REF ECN 2731	25JUNE2013	CCB
										REV	DESCRIPTION	DATE	CHKD

TITLE	DRAWING NUMBER	REV. 2
CONDUIT / COVER PLATE	19045	SHT. 3/4

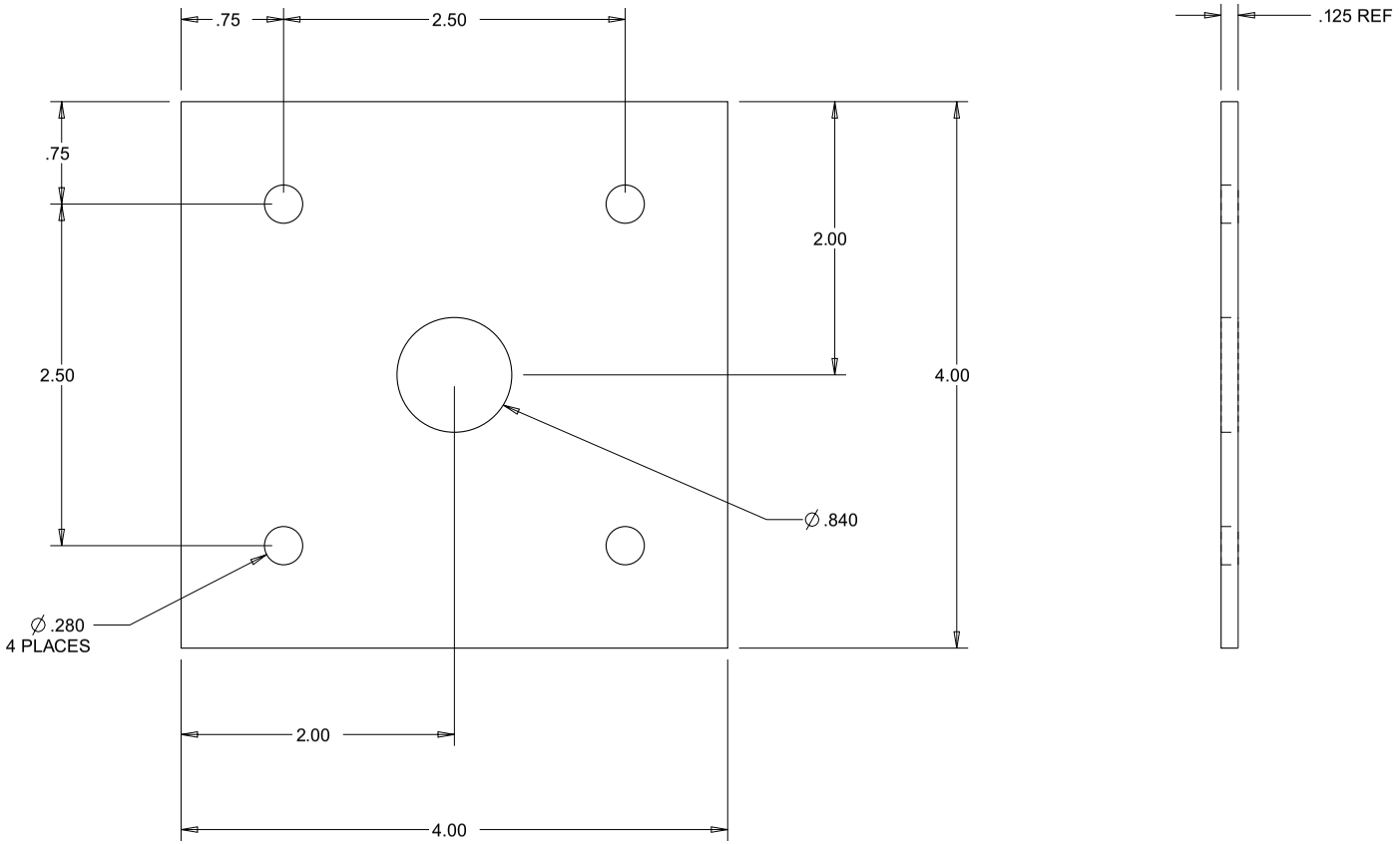

19045-03
CONDUIT PLATE, 1/2 PIPE

SCALE 0.750

MATERIAL	SCALE											
.125 THK ALUMINIUM 5052-H32	AS SHOWN	UNLESS OTHERWISE SPECIFIED DIMENSIONS ARE IN INCHES	XX ± 0.03 XXX ± 0.01	ANGLES ± 0.5° OTHER _____	Natural Resources Canada				DWG SIZE A1	2	SEE SHT 4 FOR CHANGES REF ECN 2731	4 JUL 2013	CCB
					DWN CCB	DATE DWN 25JUN2013	CHKD	DATE		1	PROTOTYPE RELEASE, REF ECN 2731	25JUNE2013	CCB
										REV	DESCRIPTION	DATE	CHKD

TITLE	DRAWING NUMBER	REV. 2
CONDUIT / COVER PLATE	19045	SHT. 4/4

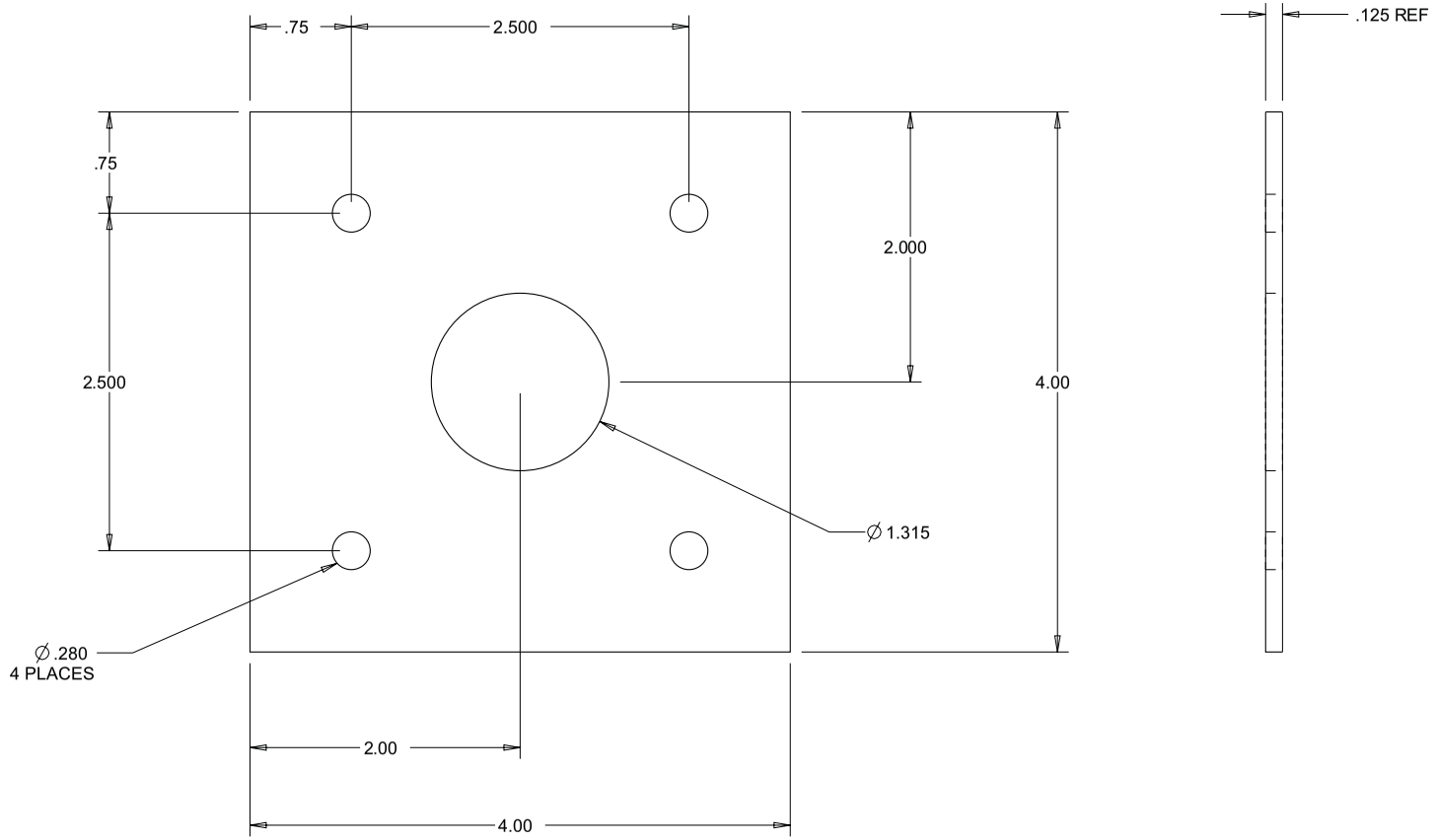

19045-04
CONDUIT PLATE, 1" PIPE

SCALE 0.750

MATERIAL	SCALE				Natural Resources Canada				DWG SIZE	2	VAR -04 CREATED, REF ECN 2731	4 JUL 2013	CCB
.125 THK ALUMINIUM 5052-H32	AS SHOWN	UNLESS OTHERWISE SPECIFIED DIMENSIONS ARE IN INCHES	XX ± 0.03 XXX ± 0.01	ANGLES ± 0.5° OTHER _____	DWN CCB	DATE DWN 25JUN2013	CHKD	DATE	A1	REV	DESCRIPTION	DATE	CHKD

TITLE	DRAWING NUMBER	REV.
ANTENNA MOUNT	19058	A
		SHT. 1/1

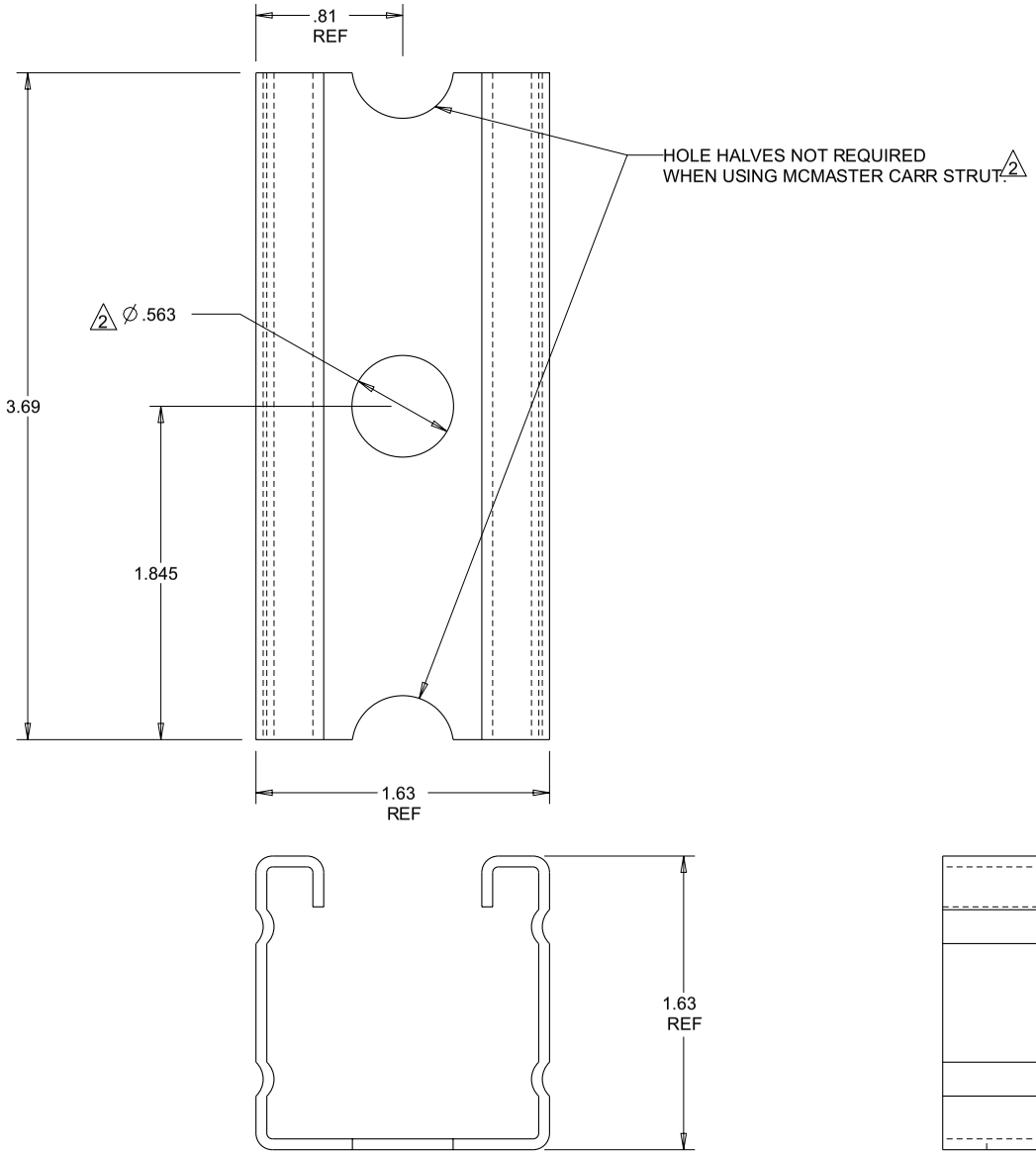

REV	DESCRIPTION	DATE	CHKD
A	ALUMINUM UNISTRUT WAS STEEL.ECN 2764.	7FEB2014	GCH
2	MCMASTER CARR ALTERNATE ADDED. NON ECN.	16JAN2014	GCH
2	DIM 3.69 WAS 1.75, 1.845 WAS .82 REF ECN 2731	28 AUG 13	CCB
1	PROTOTYPE RELEASE, REF ECN 2731	25JUNE2013	CCB

MATERIAL
MCMASTER-CARR 3230T66 (UNISTRUT) 2 A

SCALE
AS SHOWN

UNLESS OTHERWISE SPECIFIED
DIMENSIONS ARE IN INCHES

XX ± 0.03
XXX ± 0.01

ANGLES ± 0.5°
OTHER _____

Natural Resources Canada

DWN	DATE DWN	CHKD	DATE
CCB	25JUNE2013		

DWG SIZE
A1

TITLE	DRAWING NUMBER	REV.
INSTRUMENT BOX ASSEMBLY, POST MNT, 26"Hx22"Wx18.25"DP	19211	1
		SHT. 1/2

WIRE PER SCHEMATIC 19219 AND WIRE LIST 19220-01

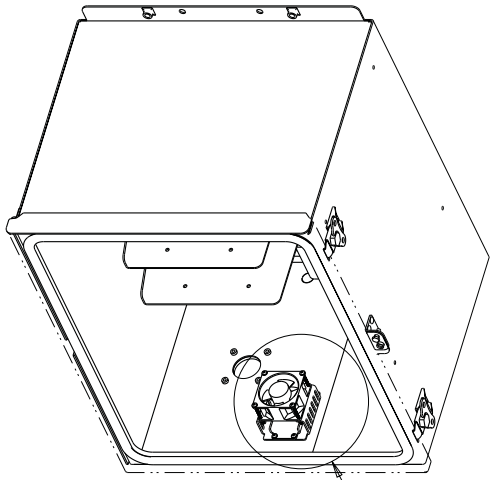

SCALE 0.080

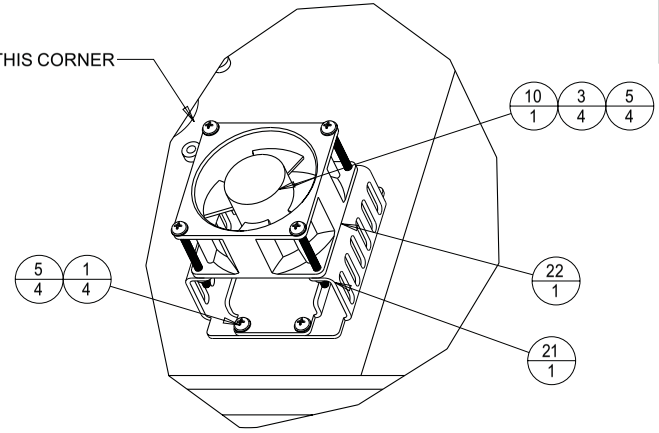

DETAIL A
SCALE 0.250

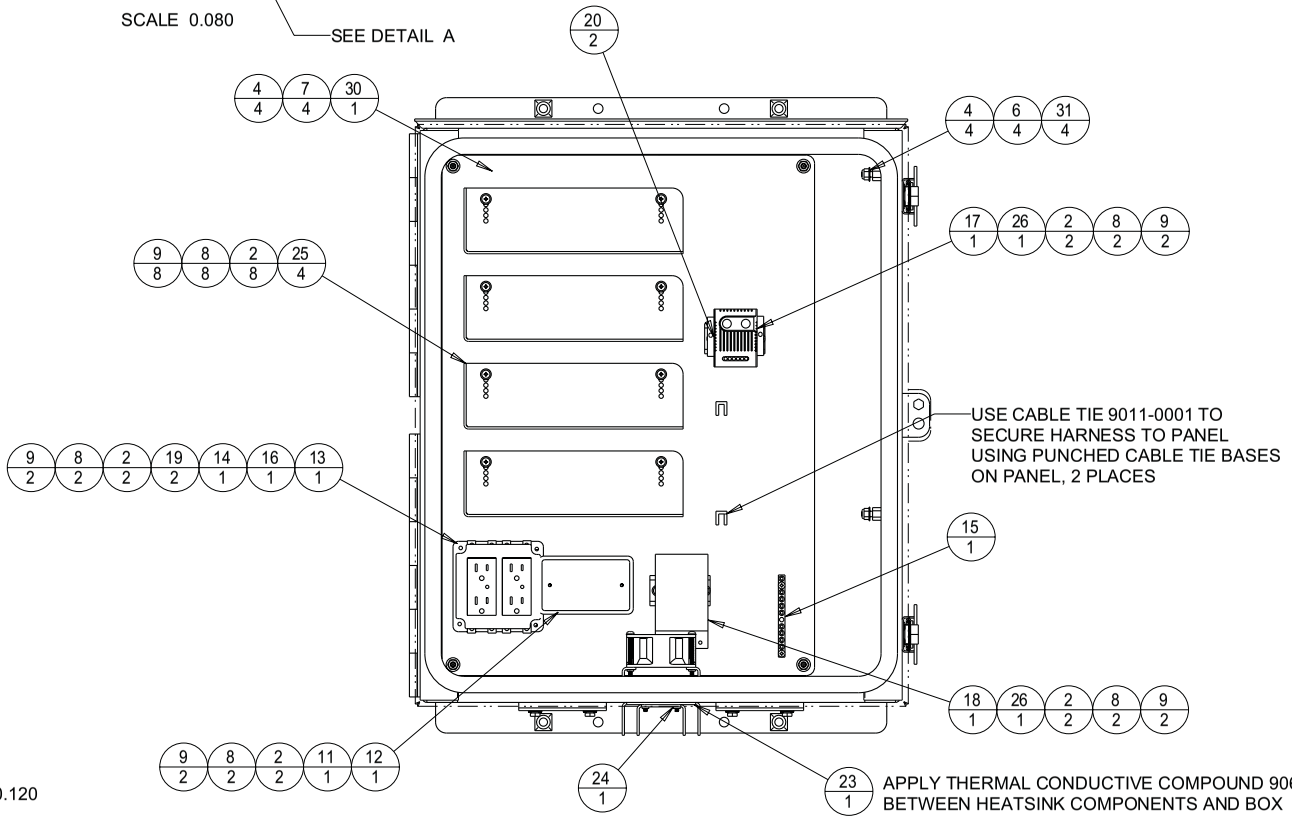

SCALE 0.120

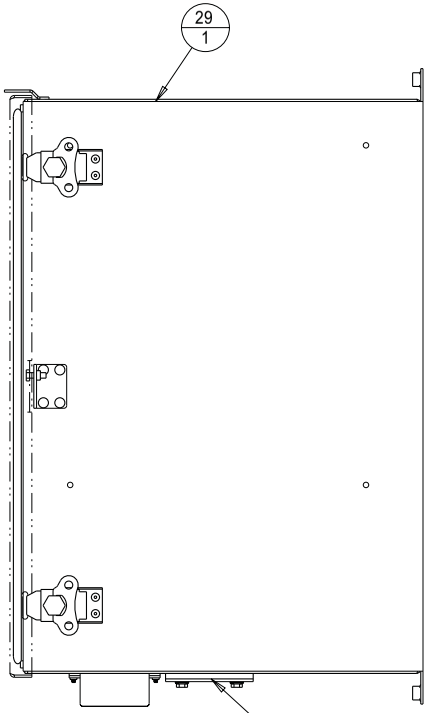

MATERIAL	SCALE										
AS SHOWN	AS SHOWN	UNLESS OTHERWISE SPECIFIED DIMENSIONS ARE IN INCHES	XX ± 0.03 XXX ± 0.01	ANGLES ± 0.5° OTHER _____	*Natural Resources Canada*	DWG SIZE	1	PROTOTYPE RELEASE. ECN 2934	01FEB16	GCH
					DWN CCB / DATE DWN 01FEB16 / CHKD / DATE	A1	REV	DESCRIPTION	DATE	CHKD

TITLE	DRAWING NUMBER	REV.
INSTRUMENT BOX ASSEMBLY, POST MNT, 26"Hx22"Wx18.25"DP	19211	1
		SHT. 2/2

INDEX	PART#	DESCRIPTION	QTY
1	9000-1068	SCR MACH #8-32*.75"L P/PH SST	4
2	9000-1099	SCR MACH #10-32*.5"L P/PH SST	16
3	9000-1134	SCR MACH #8-32*2.0"L P/PH STL ZN PLD	4
4	9001-1032	NUT 1/4-20 NYLOK HEX SST	8
5	9002-0045	WSHR #8 FLAT SST 18-8	8
6	9002-0066	WSHR 1/4" FLAT SAE SST	4
7	9002-0074	WSHR 1/4" FLAT SAE GR8 YELLOW ZN CHROMATE PLD	4
8	9002-0076	WSHR #10 FLAT SAE STL YELLOW ZN CHROMATE PLD	16
9	9002-1020	WSHR #10 LOCK REG SST	16
10	9017-0010	FAN,AXIAL,32SCFM,115VAC,3.15"SQ	1
11	9018-0022	COVER, BLANK, GALV STL	1
12	9018-0024	BOX, RECEPTACLE, 2"WX4"LX2"D	1
13	9018-0025	BOX, SQ 4*4*1.5" GALV STL	1
14	9018-0032	SW COVER, 4*4" GALV STL, 2 DECORA/GFCI	1
15	9019-3008	GRD, BAR, 9 WIRES, AL, 8-32 MNTG SCREWS	1
16	9019-4004	BSHG, 0.5" PLASTIC KNOCK OUT	1
17	9066-1022	THERMOSTAT DUAL, 0 TO 60C, NC-OOR, NO-COR, DIN RAIL MNT	1
18	9066-1023	HEATER, CABINET, 50W, AC/DC 120-240	1
19	9079-0006	RCPT, DUPLEX 15A-125V, SURGE W INDICATING LED	2
20	9088-1001	STOP, END, PLASTIC, 10MM W, DIN RAIL	2
21	14347-01	HEATSINK, FAN, INNER,STANDOFF	1
22	14347-02	HEATSINK, INNER	1
23	14347-03	HEATSINK, OUTER	1
24	14347-04	HEATSINK, FAN, OUTER W PEMS	1
25	14349-21	TRAY, INSTRUMENT, 3"HX10WX10DP	4
26	16416-02	DIN RAIL, 2.75"L (2 SLOTS)	2
27	19045-01	CONDUIT PLATE, 3/4 PIPE	1
28	19045-03	CONDUIT PLATE, 1/2" PIPE	1
29	19212	BOX, POST MNT, 26"HX22WX18.25"DP, AL, SEALED	1
30	19213	INNER PANEL, INSTRUMENT BOX W PEMS	1
31	MCMASTER_CARR_93330A662	STANDOFF,RND,1/4-20X1.50"LG, .50OD,AL,FEMALE	4
	9011-0001	TIE, CABLE, NY, MINI 4"OL	2
	9067-0004	THERMAL CONDUCTIVE COMPOUND	A/R

MATERIAL	SCALE										
AS SHOWN	AS SHOWN	UNLESS OTHERWISE SPECIFIED DIMENSIONS ARE IN INCHES	XX ± 0.03 XXX ± 0.01	ANGLES ± 0.5° OTHER _____	*Natural Resources Canada*	DWG SIZE	1	PROTOTYPE RELEASE. ECN 2934	01FEB16	GCH
					DWN CCB / DATE DWN 01FEB16 / CHKD / DATE	A1	REV	DESCRIPTION	DATE	CHKD

INDEX	PART#	DESCRIPTION	QTY
1	9000-0058	SCR HHC 1/4-20*.75"L SST 18-8	1
2	9000-0104	SCR HHC 1/4-20*.75"L GR 8 STL YELLOW ZN CHROMATE PLD	8
3	9000-9046	STUD, SELF-CLINCH 1/4-20*.5"L SST	4
4	9000-9062	STUD, SELF-CLINCH 1/4-20*1.50"L SST	4
5	9001-5019	NUT 3/8-16 RIVNUT .027-.150" ALY STL	4
6	9001-5042	NUT 1/4-20 SELF-CLINCH SST	9
7	9002-4005	WSHR 1/4" SEALING STL/RBR	8
8	9004-0026	RIVET .188" .13-.25" POP SST DM HD.440"L	8
9	9004-1101	PIN MAXLOK TRUSS/HD 3/16"DIA STL ZN PLD	4
10	9004-1102	COLLAR, MAXLOK 3/16"DIA PIN	4
11	9030-0028FULL	SEAL, BULB RS SECT PUSH ON TRIM .09"GRIP	1
12	9046-0046	LATCH, ROTARY ACTION, CAM, SST	2
13	9072-0023	SPACER, NYLON, 5/8" OD, .252 ID, 3/4" LONG	4
14	9073-0021	HINGE, ALUM, 2" OW, 2" KNUCLE, .12" THK, .25DIA PIN, 12" LONG	2
15	14634	GSKT, 4X4"X.25"THK,SI,4 BOLT	2
16	18665	HASP, PADLOCK WITH BOLT	1
17	19045-02	COVER PLATE	2
18	19212-21	BODY, BOX, 22" X 18.25"	1
19	19212-22	END PANEL, BATTERY BOX, BLANK	1
20	19212-23	END PANEL, BATTERY BOX	1
21	19212-24	DOOR	1
22	19212-25	DRIP LIP	1
23	19215-01	INSULATION, TOP, HALF	2
24	19215-02	INSULATION, SIDE	2
25	19215-03	INSULATION, BOTTOM	1
26	19215-04	INSULATION, DOOR	1
27	19215-05	INSULATION, BACK	2
28	19215-06	INSULATION, BOTTOM	1
	9014-0026	SILICONE, RTV 732, AL	A/R

TITLE	DRAWING NUMBER	REV.
BOX, POST MNT, SEALED AL, 26"Hx22"Wx18.25"DP	19212	1 SHT. 1/6

NOTE: PRESS FIT ALL INSULATION IN TO PLACE, UNLESS OTHERWISE NOTED.

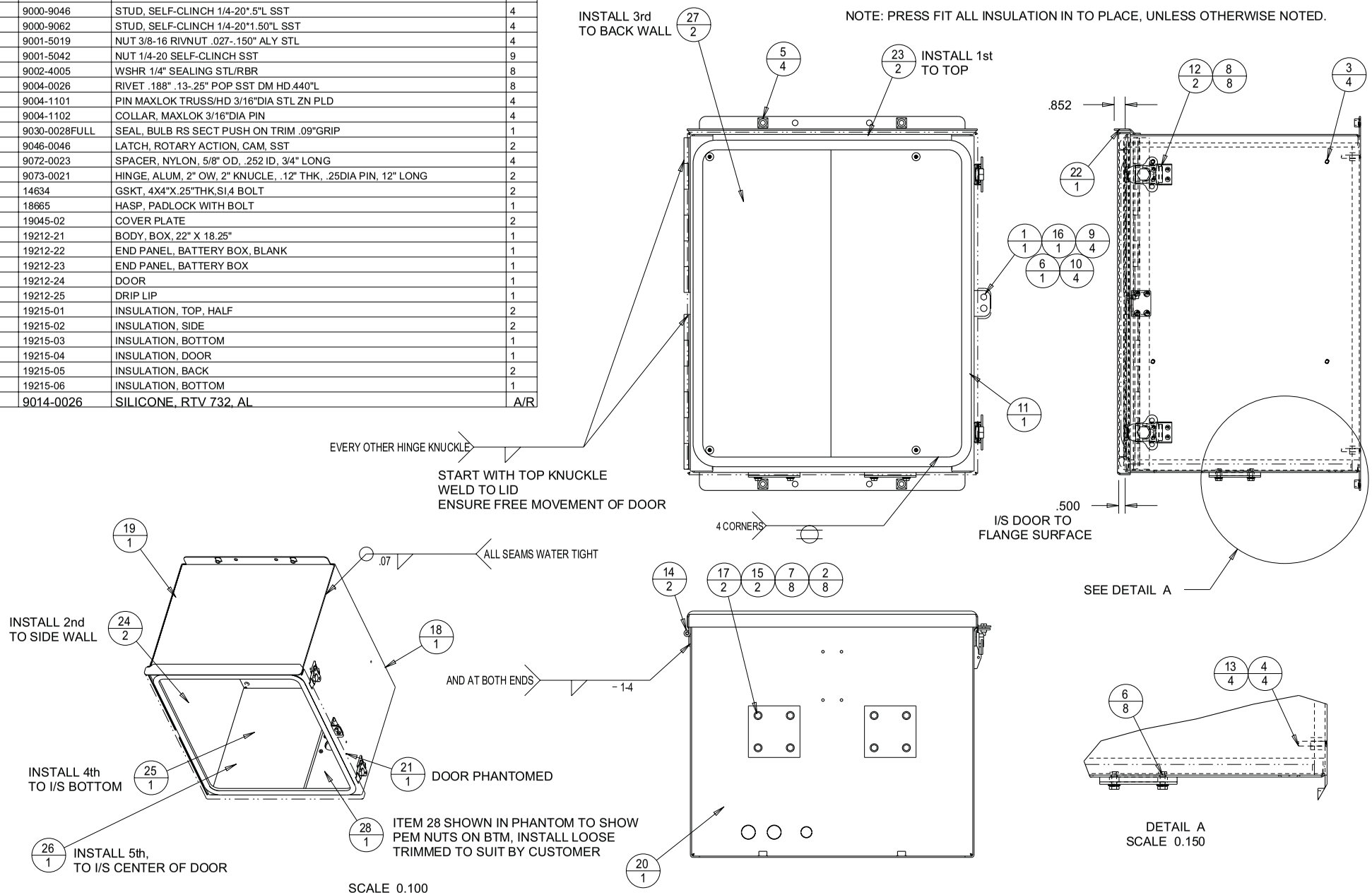

MATERIAL	SCALE										
AS SHOWN	AS SHOWN	UNLESS OTHERWISE SPECIFIED DIMENSIONS ARE IN INCHES	XX ± 0.03 XXX ± 0.01	ANGLES ± 0.5° OTHER _____	*Natural Resources Canada*	DWG SIZE	1	PROTOTYPE RELEASE. ECN 2934	02FEB16	GCH
					DWN CCB / DATE DWN 02FEB16 / CHKD / DATE	A1	REV	DESCRIPTION	DATE	CHKD

TITLE	DRAWING NUMBER	REV.
BOX, POST MNT, SEALED AL, 26"Hx22"Wx18.25"DP	19212	1 SHT. 2/6

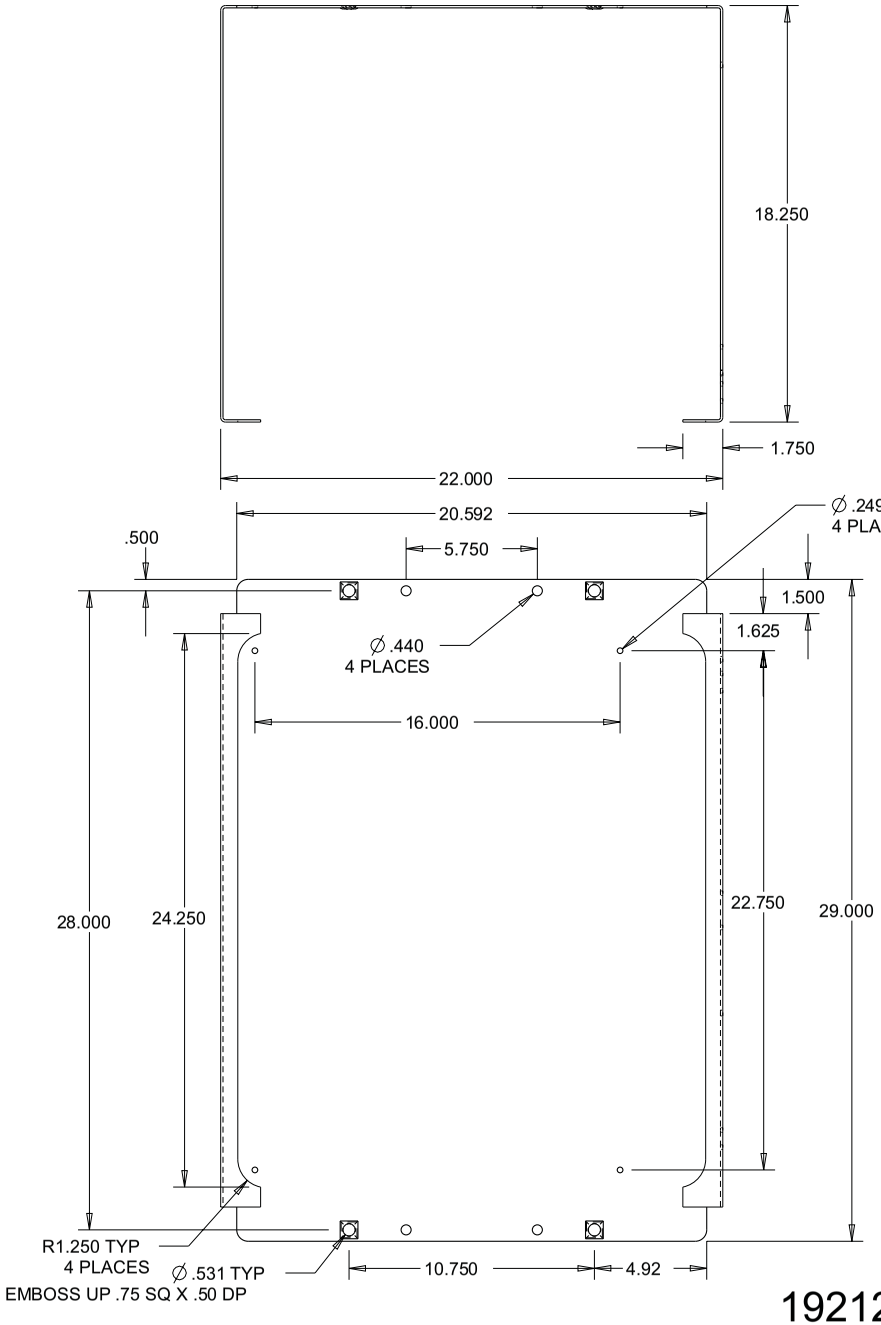

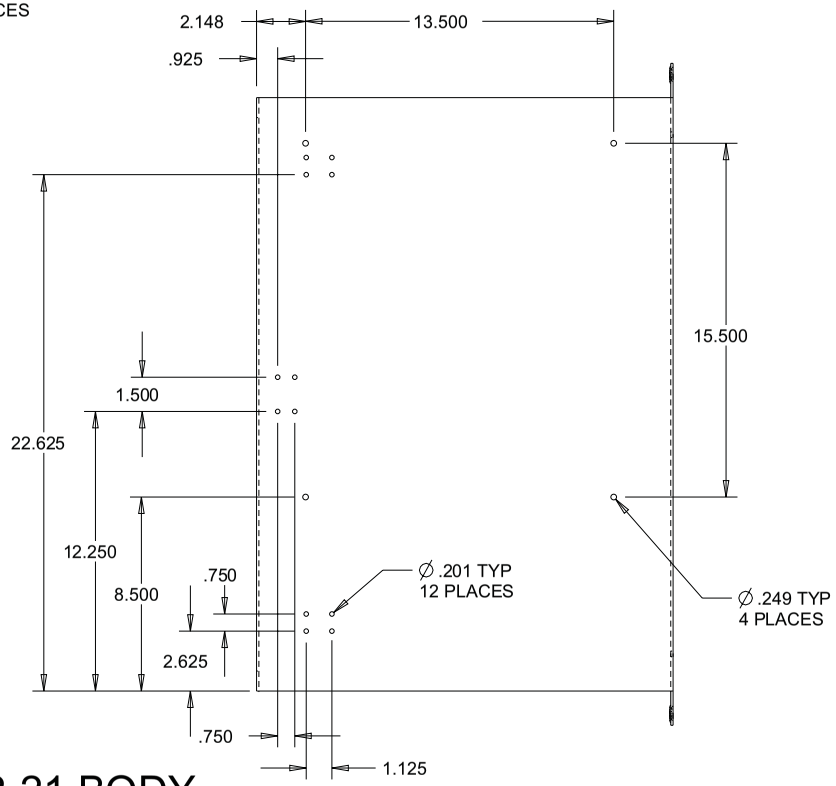

19212-21 BODY

MATERIAL	SCALE											
AL SHT, 10GA (.102) 5052-H32	SCALE 0.125 AS SHOWN	UNLESS OTHERWISE SPECIFIED DIMENSIONS ARE IN INCHES	XX ± 0.03 XXX ± 0.01	ANGLES ± 0.5° OTHER _____	*Natural Resources Canada*				DWG SIZE		PROTOTYPE RELEASE. ECN 2934	02FEB16	GCH
					DWN CCB	DATE DWN 02FEB16	CHKD	DATE	A1	REV	DESCRIPTION	DATE	CHKD

TITLE	DRAWING NUMBER	REV.
BOX, POST MNT, SEALED AL, 26"Hx22"Wx18.25"DP	19212	1 SHT. 3/6

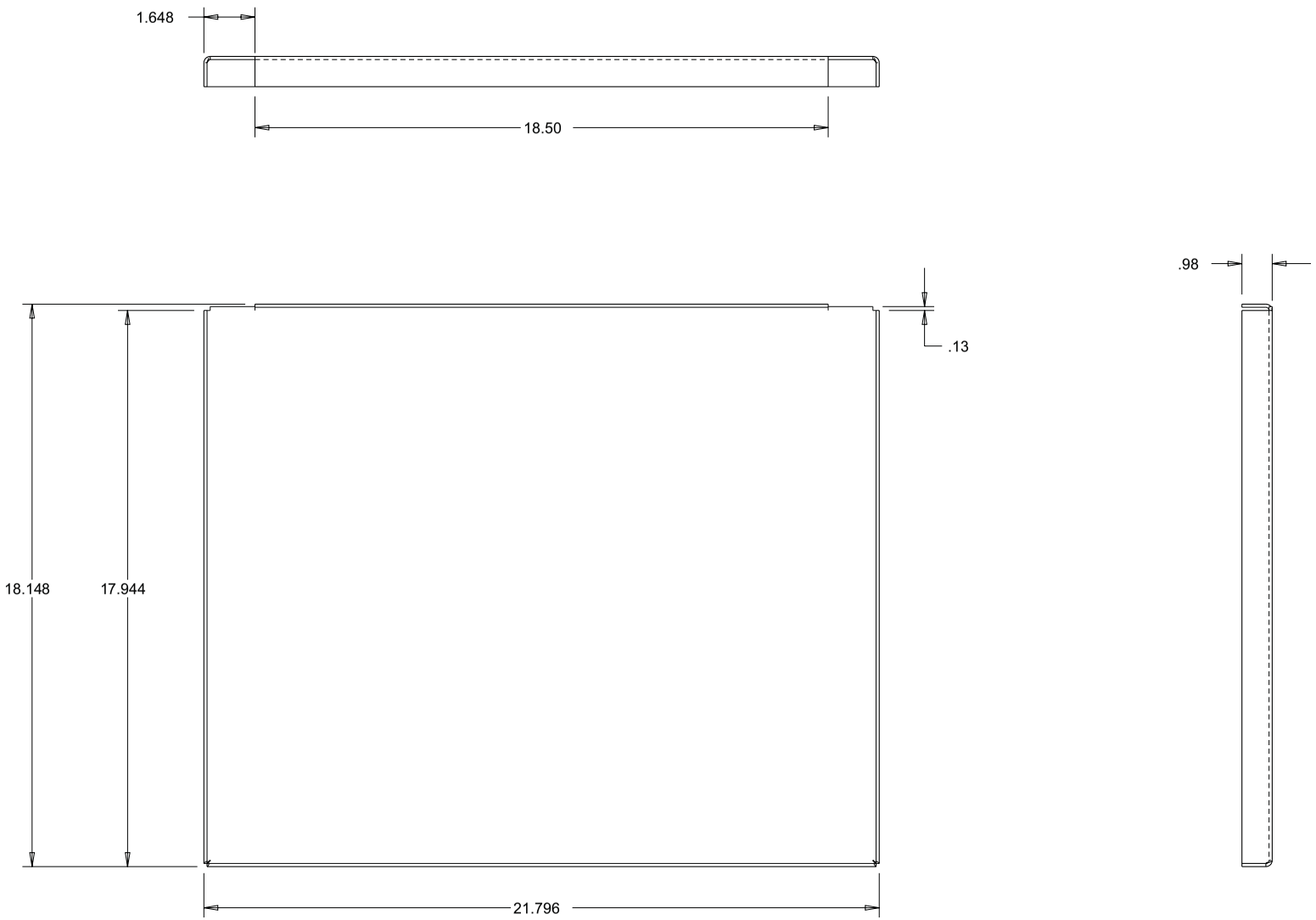

SCALE 0.200

19212-22 TOP

MATERIAL	SCALE										
AL SHT, 10GA (.102) 5052-H32	AS SHOW	UNLESS OTHERWISE SPECIFIED DIMENSIONS ARE IN INCHES	XX ± 0.03 XXX ± 0.01	ANGLES ± 0.5° OTHER _____	*Natural Resources Canada*				DWG SIZE	1	PROTOTYPE RELEASE. ECN 2934	02FEB16	GCH
					DWN CCB	DATE DWN 02FEB16	CHKD	DATE	A1	REV	DESCRIPTION	DATE	CHKD

TITLE	DRAWING NUMBER	REV.
BOX, POST MNT, SEALED AL, 26"Hx22"Wx18.25"DP	19212	1 SHT. 4/6

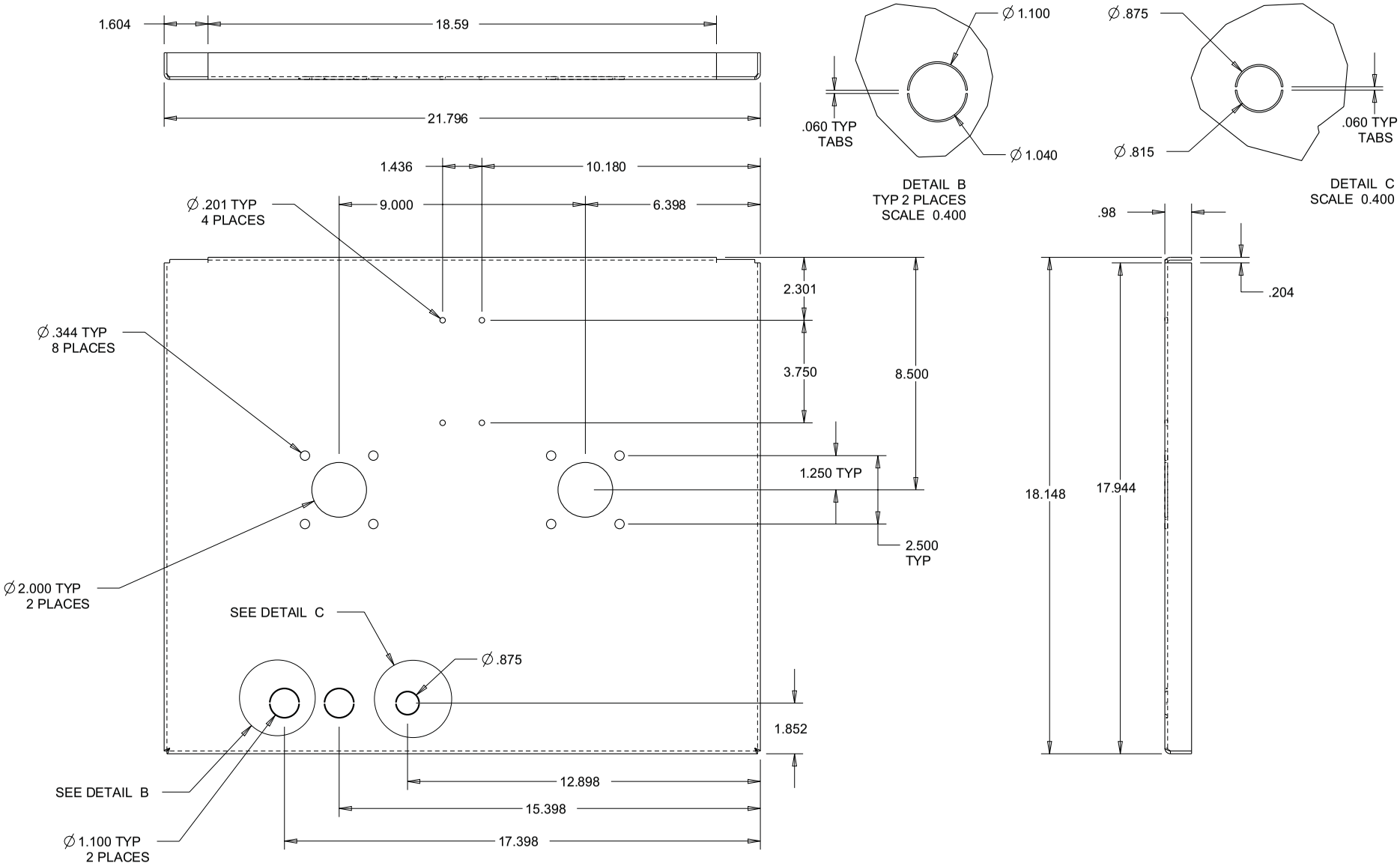

19212-23 BTM

MATERIAL	SCALE										
AL SHT, 10GA (.102) 5052-H32	AS SHOWN	UNLESS OTHERWISE SPECIFIED DIMENSIONS ARE IN INCHES	XX ± 0.03 XXX ± 0.01	ANGLES ± 0.5° OTHER _____	*Natural Resources Canada*				DWG SIZE	1	PROTOTYPE RELEASE. ECN 2934	02FEB16	GCH
					DWN CCB	DATE DWN 02FEB16	CHKD	DATE	A1	REV	DESCRIPTION	DATE	CHKD

TITLE	DRAWING NUMBER	REV.
BOX, POST MNT, SEALED AL, 26"Hx22"Wx18.25"DP	19212	1 SHT. 5/6

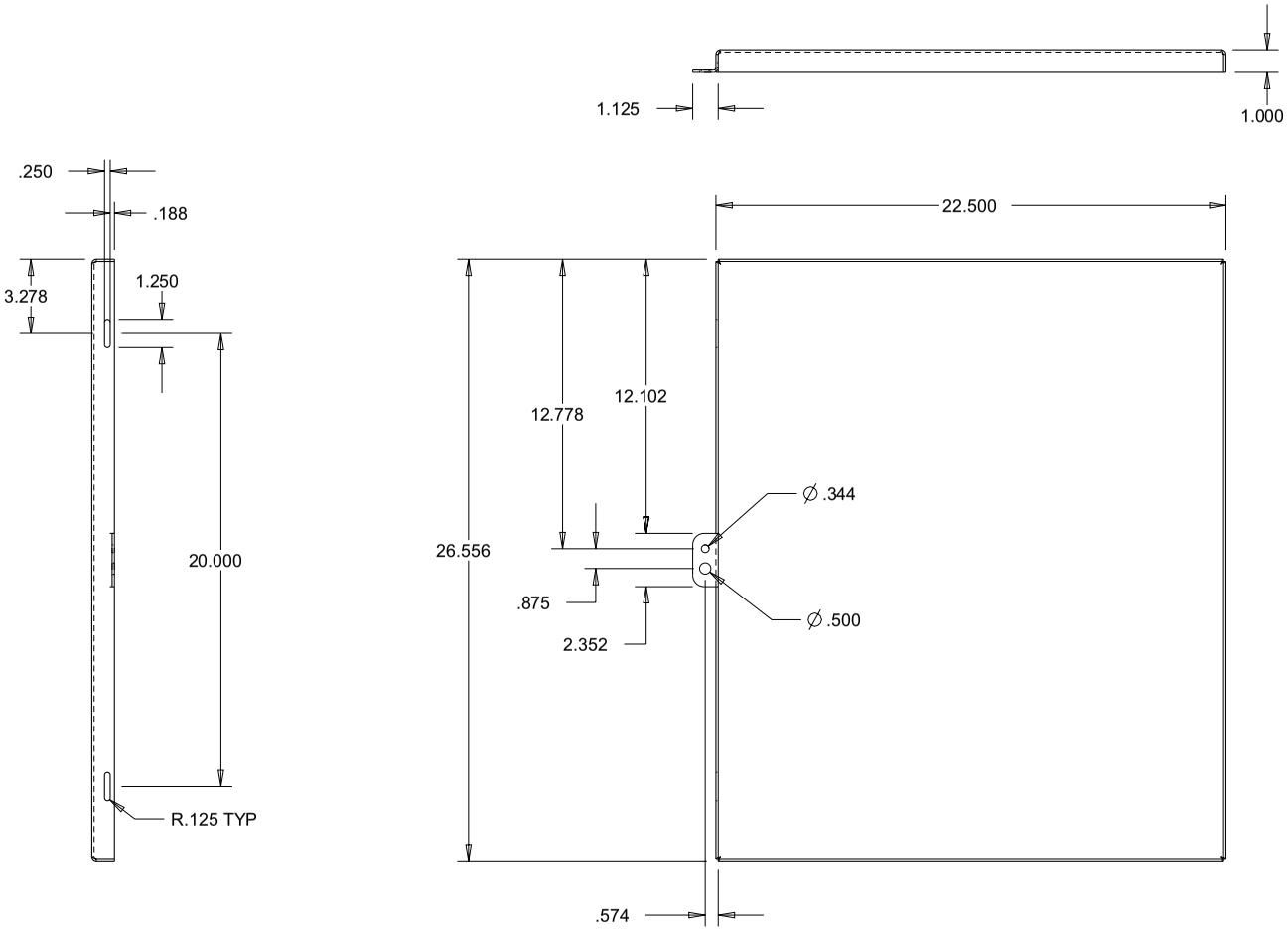

SCALE 0.125

19212-24 DOOR

MATERIAL	SCALE										
AL SHT, 10GA (.102) 5052-H32	AS SHOW	UNLESS OTHERWISE SPECIFIED DIMENSIONS ARE IN INCHES	XX ± 0.03 XXX ± 0.01	ANGLES ± 0.5° OTHER _____	*Natural Resources Canada*				DWG SIZE A1	1	PROTOTYPE RELEASE. ECN 2934	02FEB16	GCH
					DWN CCB	DATE DWN 02FEB16	CHKD	DATE		REV	DESCRIPTION	DATE	CHKD

TITLE	DRAWING NUMBER	REV.
BOX, POST MNT, SEALED AL, 26"Hx22"Wx18.25"DP	19212	1 SHT. 6/6

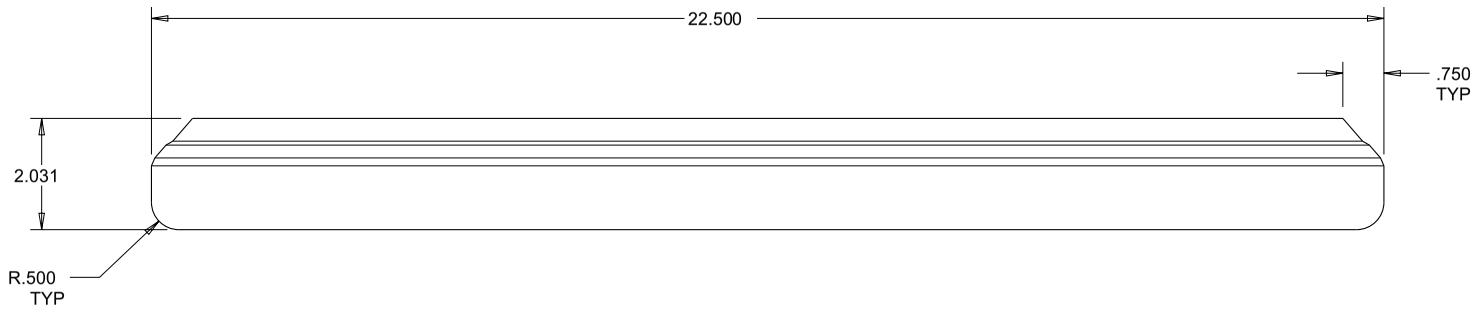

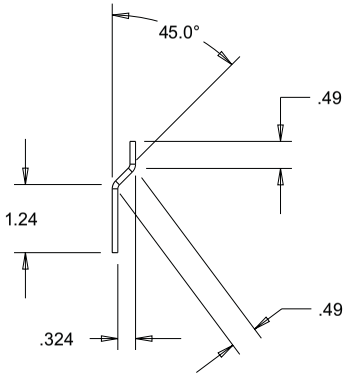

SCALE 0.300

19212-25 DRIP LIP

MATERIAL	SCALE											
AL SHT, 10GA (.102) 5052-H32	AS SHOW	UNLESS OTHERWISE SPECIFIED DIMENSIONS ARE IN INCHES	XX ± 0.03 XXX ± 0.01	ANGLES ± 0.5° OTHER _____	*Natural Resources Canada*				DWG SIZE	1	PROTOTYPE RELEASE. ECN 2934	02FEB16	GCH
					DWN CCB	DATE DWN 02FEB16	CHKD	DATE	A1	REV	DESCRIPTION	DATE	CHKD

INDEX	PART#	DESCRIPTION	QTY
1	9001-5041	NUT #10-32 SELF-CLINCH SST (SHT .056")	16
2	9001-5047	NUT #8-32 SELF-CLINCH SST HDN (.056")	2
3	19213-21	INNER PANEL, INSTRUMENT BOX	1

TITLE	DRAWING NUMBER	REV.
INNER PANEL, INSTRUMENT BOX	19213	1
		SHT. 1/2

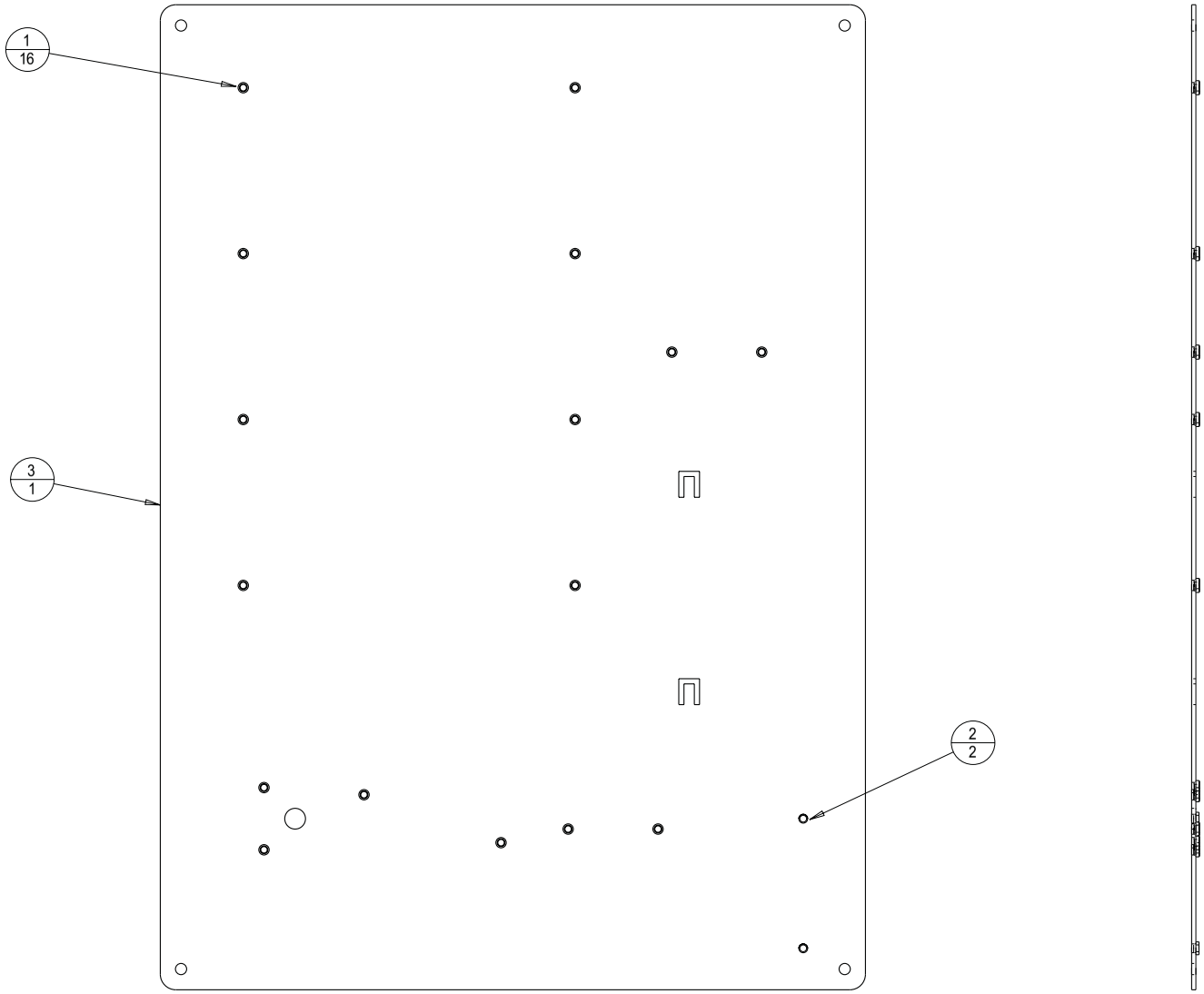

19213

SCALE 0.250

MATERIAL	SCALE										
AS SHOWN	AS SHOWN	UNLESS OTHERWISE SPECIFIED DIMENSIONS ARE IN INCHES	XX ± 0.03 XXX ± 0.01	ANGLES ± 0.5° OTHER _____	*Natural Resources Canada*	DWG SIZE	1	PROTOTYPE RELEASE. ECN 2934	03FEB16	GCH
					DWN CCB / DATE DWN 03FEB16 / CHKD / DATE	A1	REV	DESCRIPTION	DATE	CHKD

TITLE	DRAWING NUMBER	REV.
INNER PANEL, INSTRUMENT BOX	19213	1
		SHT. 2/2

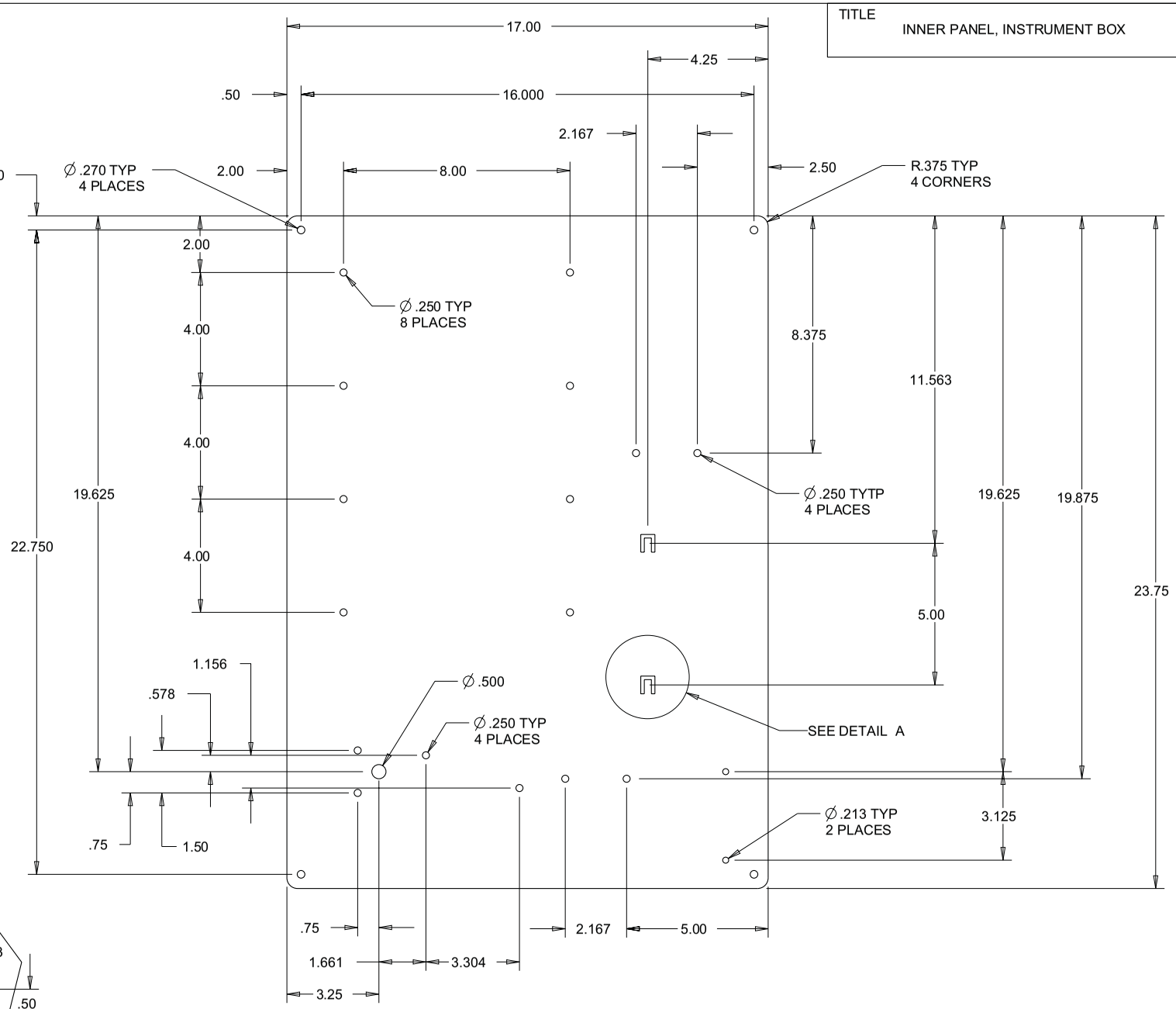

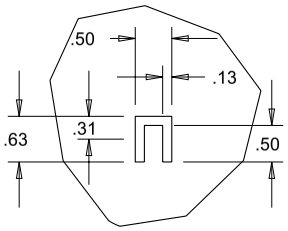

DETAIL A
CABLE TIE BASE
TYP 2 PLACES
SCALE 0.400

19213-21

MATERIAL	SCALE										
AL SHT, 10GA (.102) 5052-H32	AS SHAWN	UNLESS OTHERWISE SPECIFIED DIMENSIONS ARE IN INCHES	XX ± 0.03 XXX ± 0.01	ANGLES ± 0.5° OTHER _____	*Natural Resources Canada*				DWG SIZE	1	PROTOTYPE RELEASE. ECN 2934	03FEB16	GCH
					DWN CCB	DATE DWN 03FEB16	CHKD	DATE	A1	REV	DESCRIPTION	DATE	CHKD

TITLE	DRAWING NUMBER	REV.
INSULATION, RIGID FOAM	19215	1
		SHT. 1/6

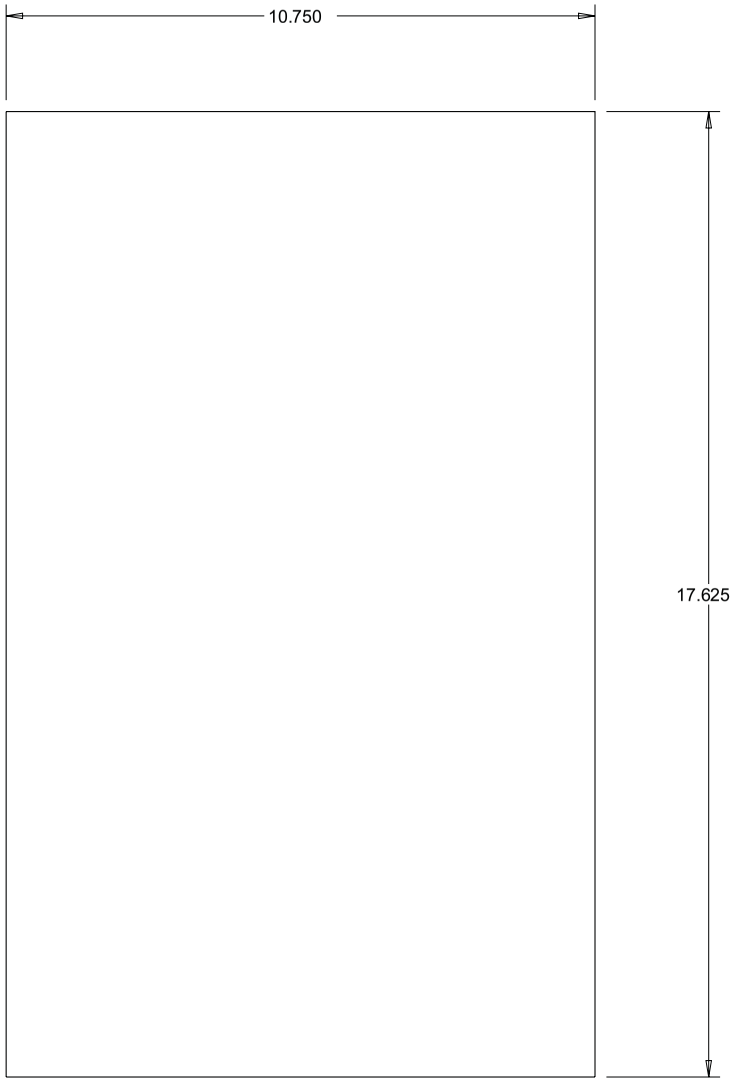

19215-01 TOP HALF

SCALE 0.300

MATERIAL	SCALE											
.55" THICK EXTRUDED POLYSTYRENE FOAM INSULATION	AS SHOWN	UNLESS OTHERWISE SPECIFIED DIMENSIONS ARE IN INCHES	XX ± 0.03 XXX ± 0.01	ANGLES ± 0.5° OTHER _____	*Natural Resources Canada*				DWG SIZE	1	PROTOTYPE RELEASE. ECN 2934	03FEB16	GCH
					DWN CCB	DATE DWN 03FEB16	CHKD	DATE	A1	REV	DESCRIPTION	DATE	CHKD

TITLE	DRAWING NUMBER	REV.
INSULATION, RIGID FOAM	19215	1
		SHT. 2/6

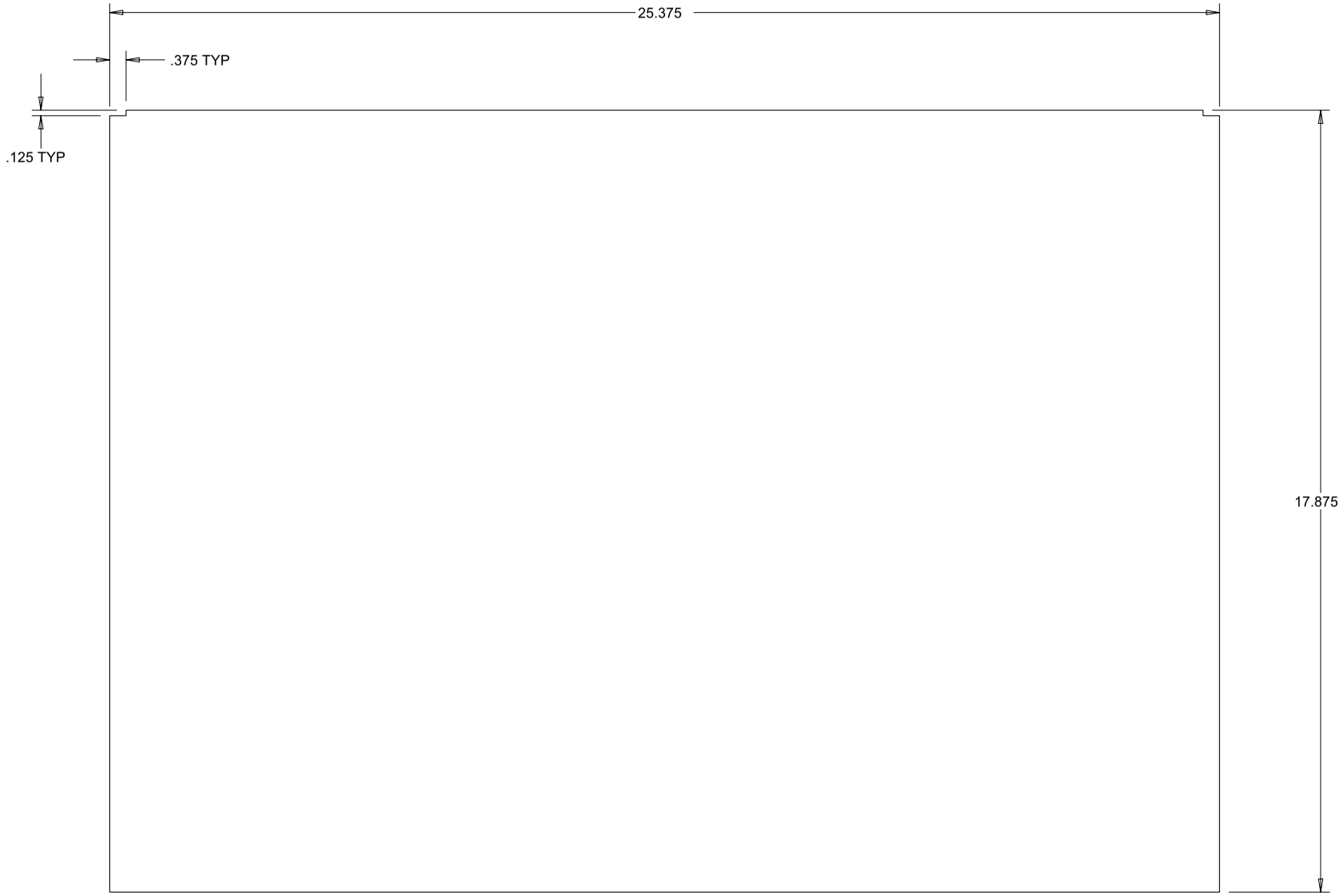

19215-02 SIDE

SCALE 0.300

MATERIAL	SCALE											
.55" THICK EXTRUDED POLYSTYRENE FOAM INSULATION	AS SHOWN	UNLESS OTHERWISE SPECIFIED DIMENSIONS ARE IN INCHES	XX ± 0.03 XXX ± 0.01	ANGLES ± 0.5° OTHER _____	*Natural Resources Canada*				DWG SIZE A1	1	PROTOTYPE RELEASE. ECN 2934	03FEB16	GCH
					DWN CCB	DATE DWN 03FEB16	CHKD	DATE		REV	DESCRIPTION	DATE	CHKD

TITLE	DRAWING NUMBER	REV.
INSULATION, RIGID FOAM	19215	1
		SHT. 3/6

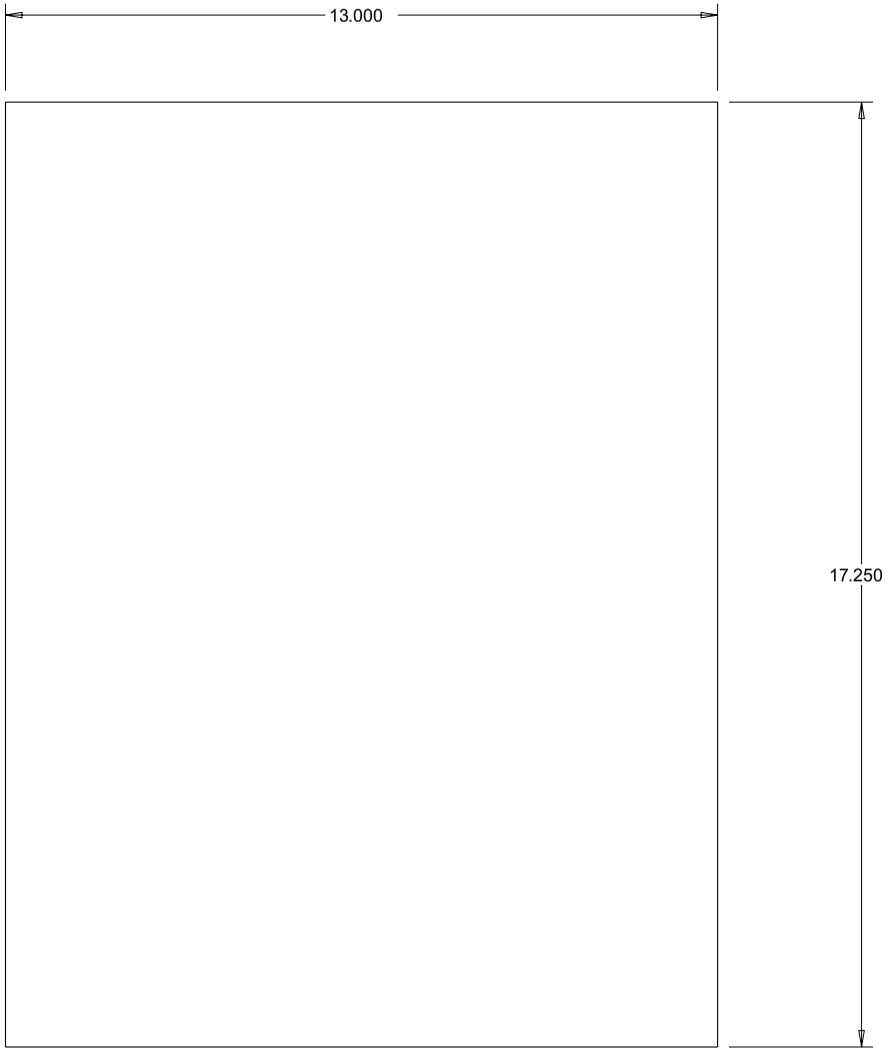

19215-03 BOTTOM

SCALE 0.300

MATERIAL	SCALE										
.55" THICK EXTRUDED POLYSTYRENE FOAM INSULATION	AS SHOWN	UNLESS OTHERWISE SPECIFIED DIMENSIONS ARE IN INCHES	XX ± 0.03 XXX ± 0.01	ANGLES ± 0.5° OTHER _____	*Natural Resources Canada*				DWG SIZE A1	1	PROTOTYPE RELEASE. ECN 2934	03FEB16	GCH
					DWN CCB	DATE DWN 03FEB16	CHKD	DATE		REV	DESCRIPTION	DATE	CHKD

TITLE	DRAWING NUMBER	REV.
INSULATION, RIGID FOAM	19215	1
		SHT. 4/6

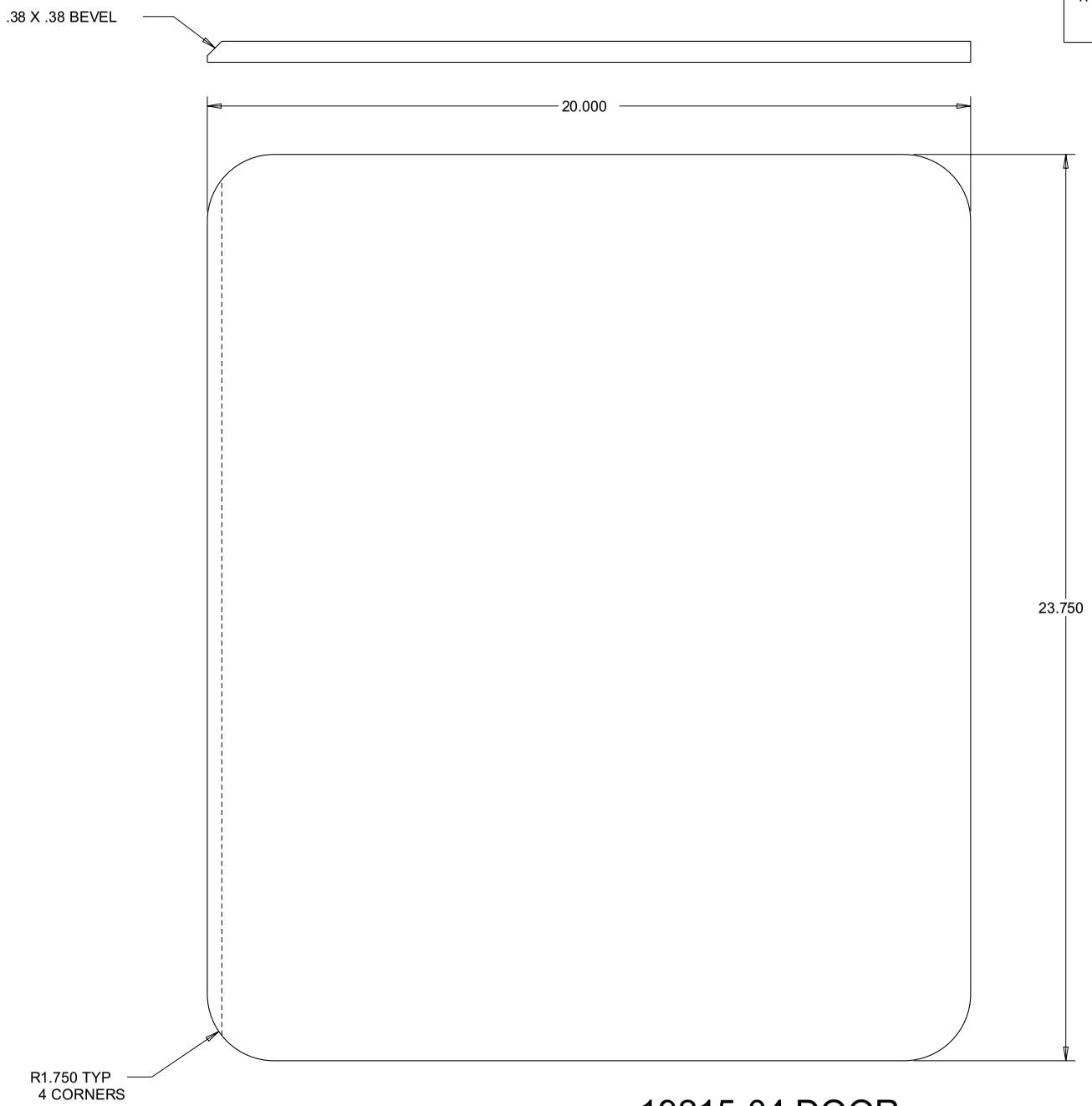

19215-04 DOOR

SCALE 0.250

MATERIAL	SCALE										
.55" THICK EXTRUDED POLYSTYRENE FOAM INSULATION	AS SHOWN	UNLESS OTHERWISE SPECIFIED DIMENSIONS ARE IN INCHES	XX ± 0.03 XXX ± 0.01	ANGLES ± 0.5° OTHER _____	*Natural Resources Canada*				DWG SIZE A1	1	PROTOTYPE RELEASE. ECN 2934	03FEB16	GCH
					DWN CCB	DATE DWN 03FEB16	CHKD	DATE		REV	DESCRIPTION	DATE	CHKD

TITLE	DRAWING NUMBER	REV.
INSULATION, RIGID FOAM	19215	1
		SHT. 5/6

19215-05 BACK HALF

SCALE 0.300

MATERIAL	SCALE											
.55" THICK EXTRUDED POLYSTYRENE FOAM INSULATION	AS SHOWN	UNLESS OTHERWISE SPECIFIED DIMENSIONS ARE IN INCHES	XX ± 0.03 XXX ± 0.01	ANGLES ± 0.5° OTHER _____	*Natural Resources Canada*				DWG SIZE	1	PROTOTYPE RELEASE. ECN 2934	03FEB16	GCH
					DWN CCB	DATE DWN 03FEB16	CHKD	DATE	A1	REV	DESCRIPTION	DATE	CHKD

TITLE	DRAWING NUMBER	REV.
INSULATION, RIGID FOAM	19215	1
		SHT. 6/6

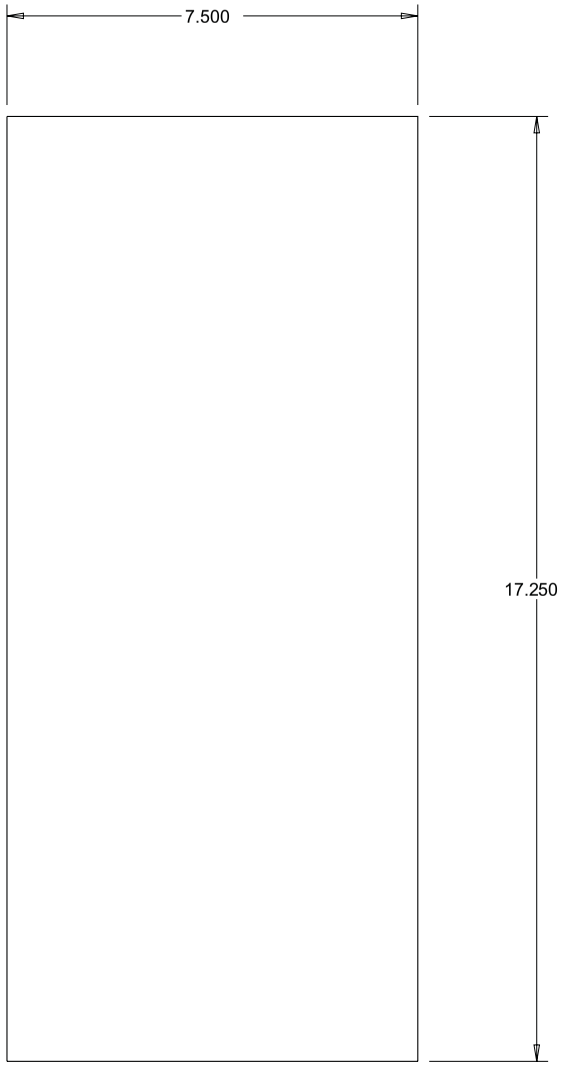

SCALE 0.300

19215-06 BOTTOM
TO BE SHIPPED LOOSE

MATERIAL	SCALE										
.55" THICK EXTRUDED POLYSTYRENE FOAM INSULATION	AS SHOWN	UNLESS OTHERWISE SPECIFIED DIMENSIONS ARE IN INCHES	XX ± 0.03 XXX ± 0.01	ANGLES ± 0.5° OTHER _____	*Natural Resources Canada*				DWG SIZE A1	1	PROTOTYPE RELEASE. ECN 2934	03FEB16	GCH
					DWN CCB	DATE DWN 03FEB16	CHKD	DATE		REV	DESCRIPTION	DATE	CHKD

INDEX	PART#	DESCRIPTION	QTY
1	9004-0030	RIVET .188" .13-.25" POP AL CLOSED END	10
2	19216-21	TOP, SUN SHADE	1
3	19216-22	SIDE PANEL, RIGHT, SUN SHADE	1
4	19216-23	SIDE PANEL, LEFT, SUN SHADE	1

TITLE	DRAWING NUMBER	REV.
SUN SHADE, POST MNT BOX 26" x 19.25"	19216	1 SHT. 1/3

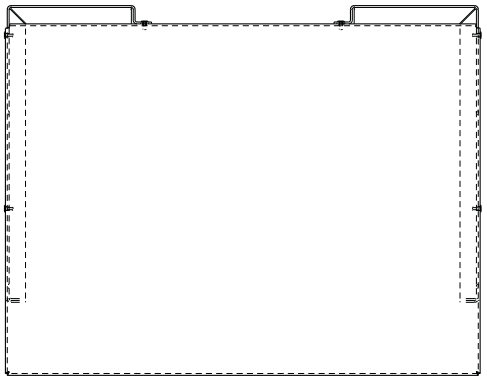

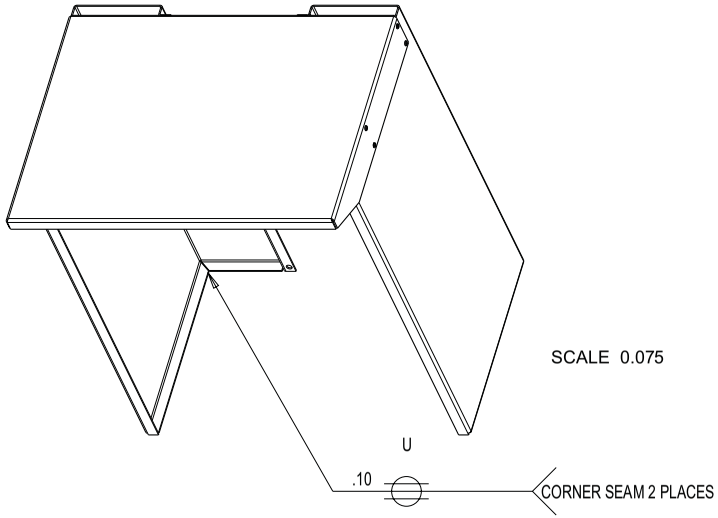

SCALE 0.075

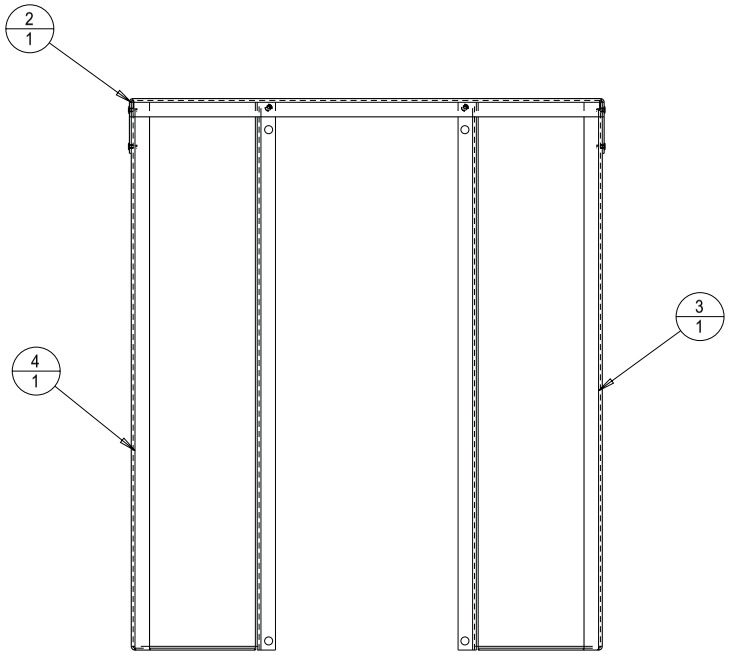

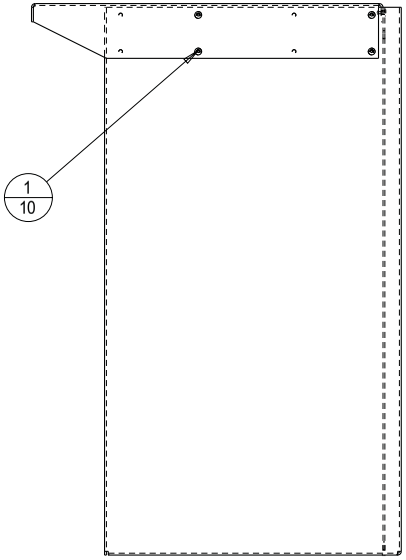

19216

SCALE 0.100

MATERIAL	SCALE										
AS SHOWN	AS SHOWN	UNLESS OTHERWISE SPECIFIED DIMENSIONS ARE IN INCHES	XX ± 0.03 XXX ± 0.01	ANGLES ± 0.5° OTHER _____	*Natural Resources Canada*				DWG SIZE	1	PROTOTYPE RELEASE. ECN 2934	4FEB16	GCH
					DWN CCB	DATE DWN 4FEB16	CHKD	DATE	A1	REV	DESCRIPTION	DATE	CHKD

TITLE	DRAWING NUMBER	REV.
SUN SHADE, POST MNT BOX 26" x 19.25"	19216	1 SHT. 2/3

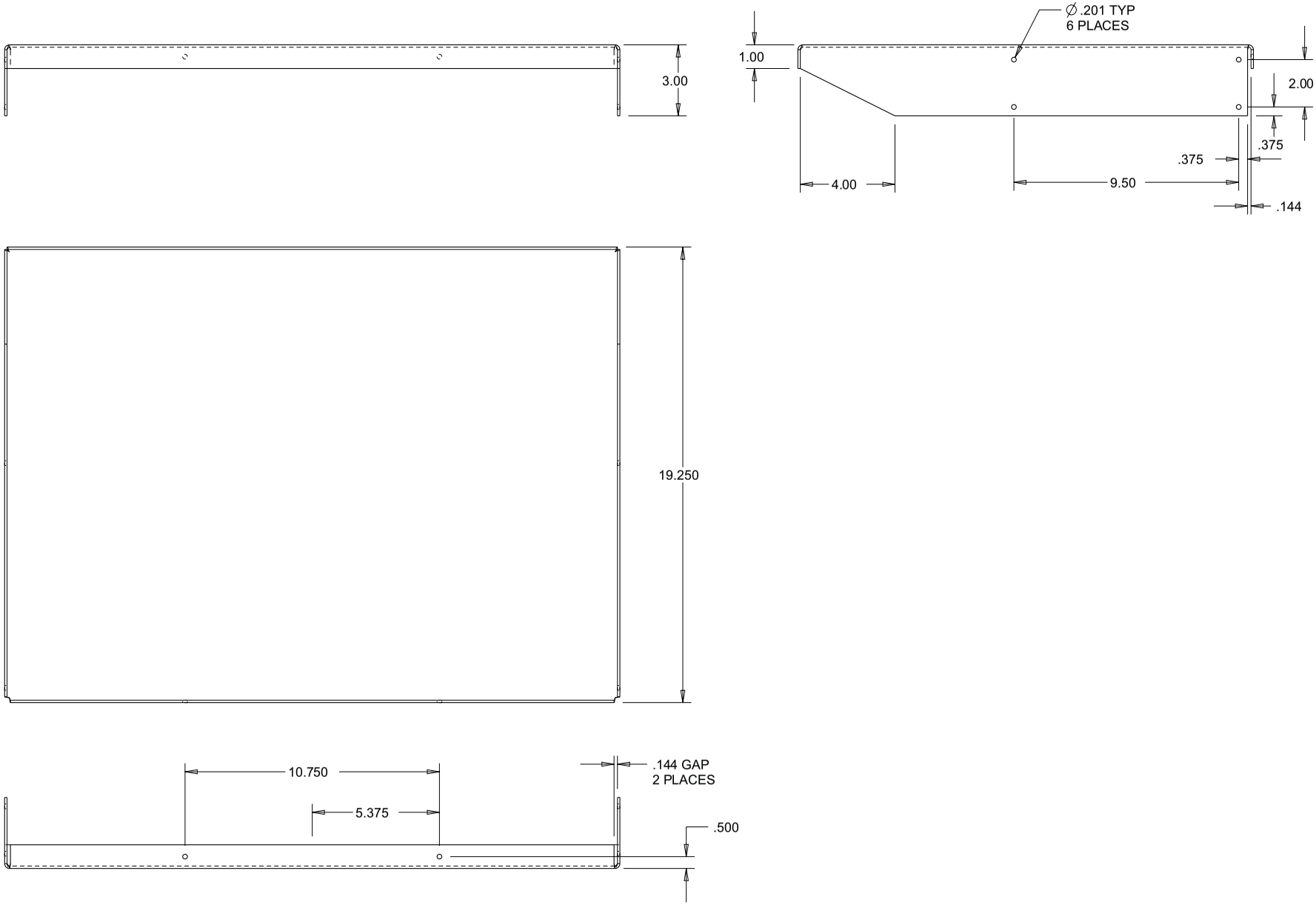

19216-21

SCALE 0.175

MATERIAL	SCALE										
AL SHT, 10GA (.102) 5052-H32	AS SHOWN	UNLESS OTHERWISE SPECIFIED DIMENSIONS ARE IN INCHES	XX ± 0.03 XXX ± 0.01	ANGLES ± 0.5° OTHER _____	*Natural Resources Canada*				DWG SIZE	1	PROTOTYPE RELEASE. ECN 2934	4FEB16	GCH
					DWN CCB	DATE DWN 4FEB16	CHKD	DATE	A1	REV	DESCRIPTION	DATE	CHKD

TITLE	DRAWING NUMBER	REV.
SUN SHADE, POST MNT BOX 26" x 19.25"	19216	1 SHT. 3/3

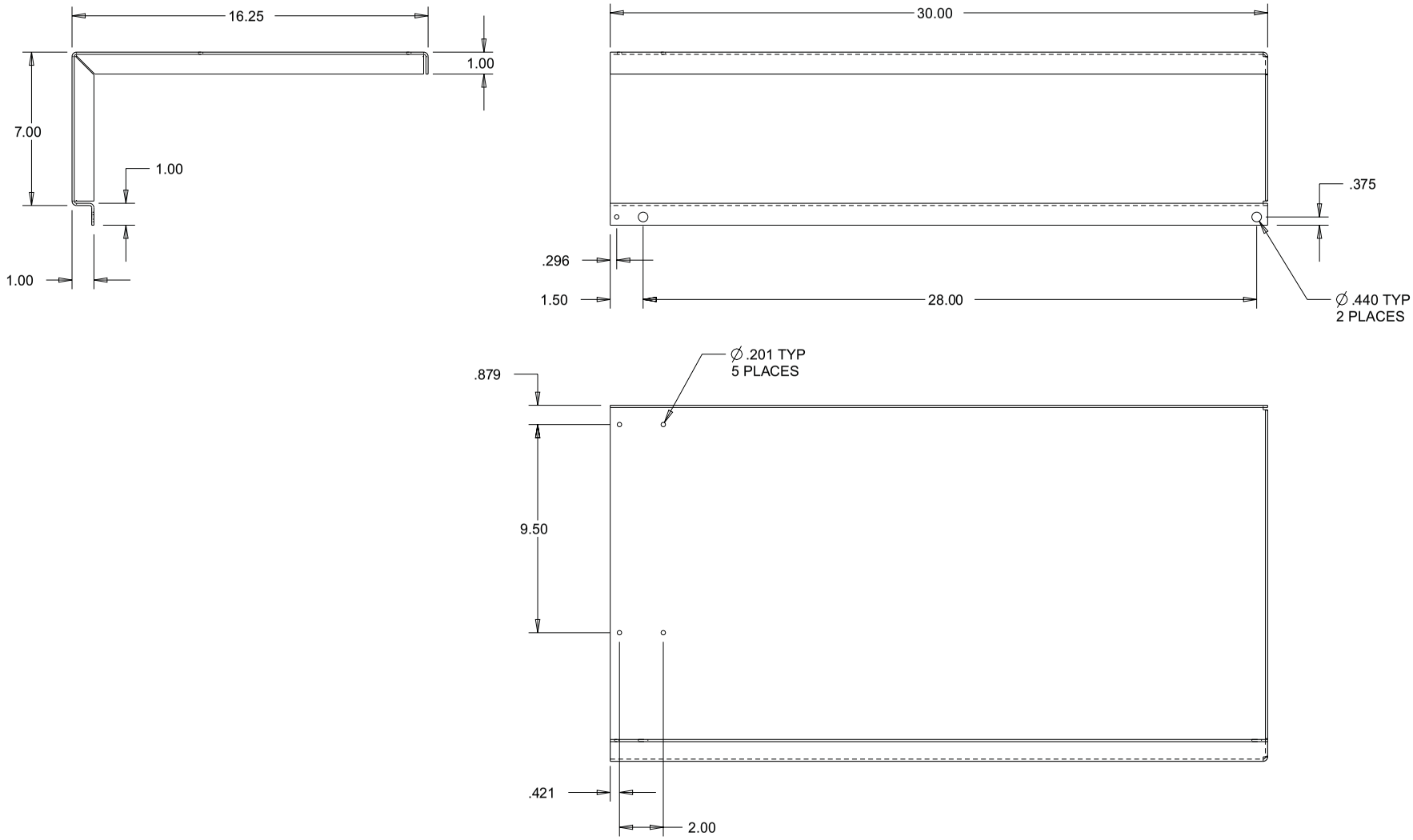

19216-22 SHOWN
19216-23 REVERSE BENDS

SCALE 0.150

MATERIAL	SCALE											
AL SHT, 10GA (.102) 5052-H32	AS SHOWN	UNLESS OTHERWISE SPECIFIED DIMENSIONS ARE IN INCHES	XX ± 0.03 XXX ± 0.01	ANGLES ± 0.5° OTHER _____	*Natural Resources Canada*				DWG SIZE	1	PROTOTYPE RELEASE. ECN 2934	4FEB16	GCH
					DWN CCB	DATE DWN 4FEB16	CHKD	DATE	A1	REV	DESCRIPTION	DATE	CHKD

TITLE	DRAWING NUMBER	REV.
CHANNEL, CONDUIT STRAIN RELIEF	14328	C
		SHT. 1/2

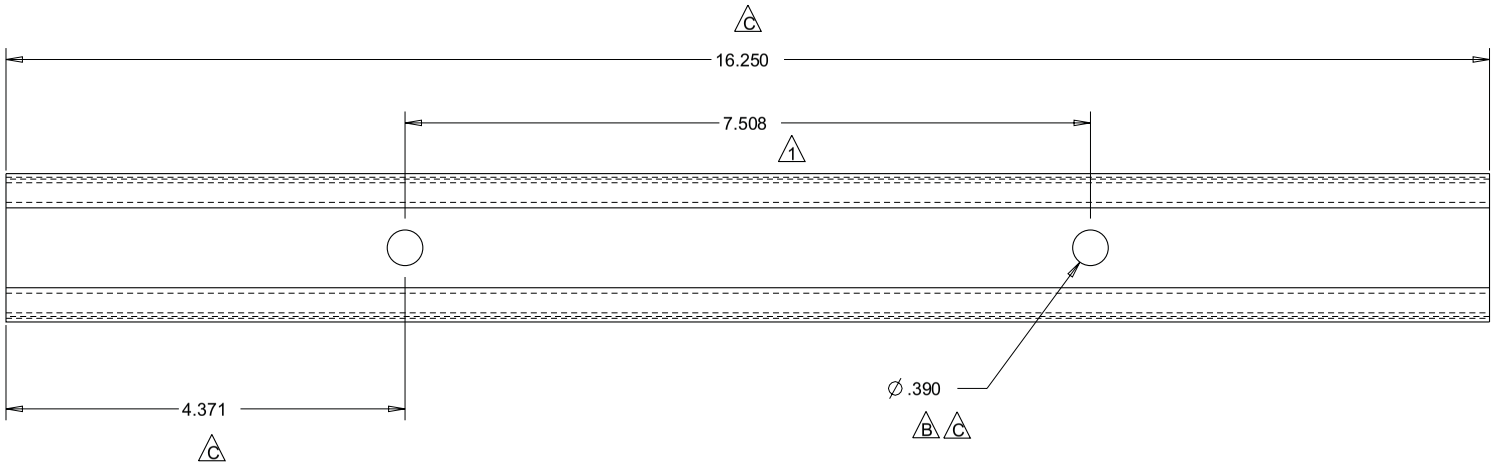

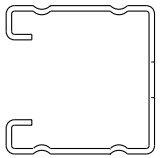

14328-01

SCALE 0.500

REV	DESCRIPTION	DATE	CHKD
C	LENGTH 16.25 WAS 9.375, .391 DIA HOLES W WAS .282DIA, 4.371 WAS.934 ECN 2934	4 FEB 2016	CCB
B	MULTIPLE HOLES REMOVED.0.282 WAS 0.563. ECN 2894.	29JULY2015	GCH
A	9085-0015 WAS UNISTRUT P200HS. ECN 2830.	8SEP2014	GCH
1	MCMASTER CARR ALTERNATE ADDED. NON ECN.	16JAN2014	GCH
1	PROTOTYPE RELEASE. ECN 2756.	01NOV2013	GCH

MATERIAL	SCALE							DWG SIZE
9085-0015 A 1	AS SHOWN	UNLESS OTHERWISE SPECIFIED DIMENSIONS ARE IN INCHES	XX ± 0.03 XXX ± 0.01	ANGLES ± 0.5° OTHER _____	Natural Resources Canada			A1
					DWN GCH	DATE DWN 01NOV2013	CHKD	DATE

TITLE	DRAWING NUMBER	REV. C
CHANNEL, CONDUIT STRAIN RELIEF	14328	SHT. 2/2

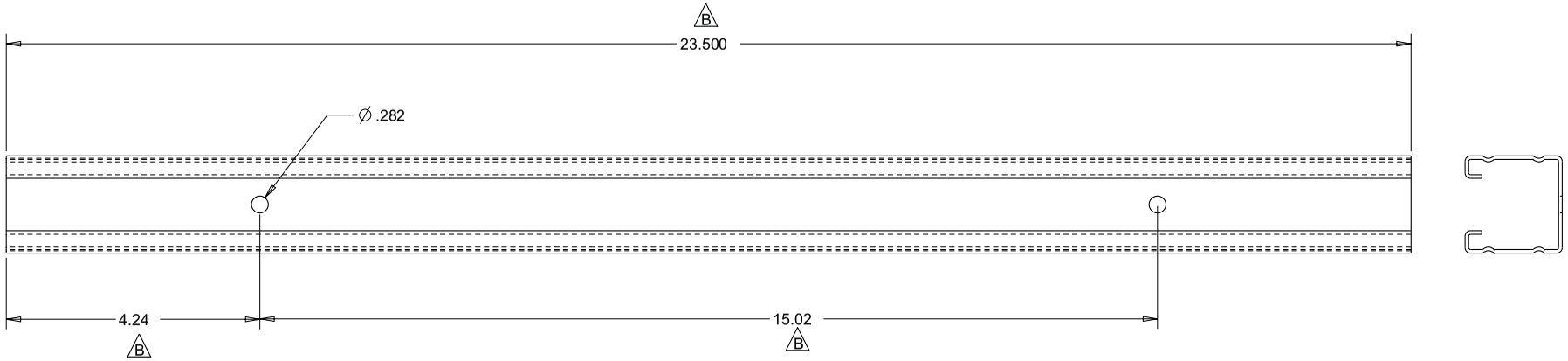

14328-02

REV	DESCRIPTION	DATE	CHKD
C	SEE SHT 1 FOR CHANGES, REF ECN 2934	4 FEB 16	CCB
B	23.50 WAS 13.125, 15.02 WAS 7.500. MULTIPLE HOLES REMOVED-UNISTRUT HAS NONE. ECN 2894.	29JULY2015	GCH
A	SHT 2 ADDED, REF ECN 2877	01NOV2013	GCH

MATERIAL	SCALE								
9085-0015	AS SHOWN	UNLESS OTHERWISE SPECIFIED DIMENSIONS ARE IN INCHES	XX ± 0.03 XXX ± 0.01	ANGLES ± 0.5° OTHER _____	Natural Resources Canada				DWG SIZE
					DWN GCH	DATE DWN 01NOV2013	CHKD	DATE	A1

SCALE 0.375

INDEX	PART#	DESCRIPTION	QTY
1	9000-1090	SCR MACH #8-32*.5"L P/BH SST	4
2	9001-1032	NUT 1/4-20 NYLOK HEX SST	4
3	9002-0012ALTERNATE	WSHR 1/4" FLAT SAE STL YELLOW ZN CHROMATE PLD	18
4	9004-0030	RIVET .188" .13-.25" POP AL CLOSED END	6
5	9019-3008	GRD, BAR, 12 WIRES, AL	1
6	14343	BOX, POST MNT, 26"HX22WX14DP, AL, SEALED	1
7	14344	INNER PANEL, BATTERY BOX, W PEMS	1
8	14345	BATTERY TRAY, PANEL MNT,7.9"HX7.8WX11.3W, AL	4
9	14346	BRKT, BATTERY TB, W PEMS	1
10	16416-02	DIN RAIL, 2.75"L (2 SLOTS)	2
11	16416-05	DIN RAIL, 1.00"L, 1/2 SLOT EA END	1
12	CBI_ELECTRIC_QY-1-40A	CB, 40A, 80V DC,DIN RAIL MNT, 13MMWIDE	1
13	FERRAZSHAWMUT_63130	POWER DISTRIBUTION BLOCK, 185A, (1)2/0-14AWG, (4)4AWG-14AWG	1
14	MCMASTER_CARR_92620A540	SCR HHC 1/4-20*.75"L GR 8 STL YELLOW ZN CHROMATE PLD	14
15	STEGO_CS060	HEATER, CABINET, 50W, AC/DC 120-240	1
16	STEGO_ZR01172000	THERMOSTAT DOUBLE, STEGO ZR 01171.0-00	1

TITLE	DRAWING NUMBER	REV.
BATTERY BOX ASSEMBLY, POST MNT 26"HX22WX14DP	14340	1
		SHT. 1/1

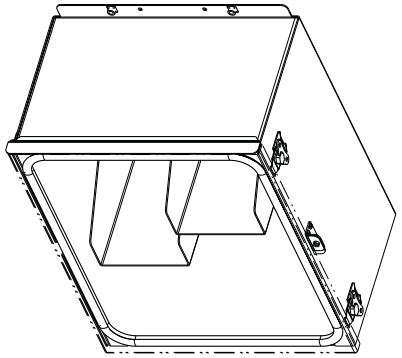

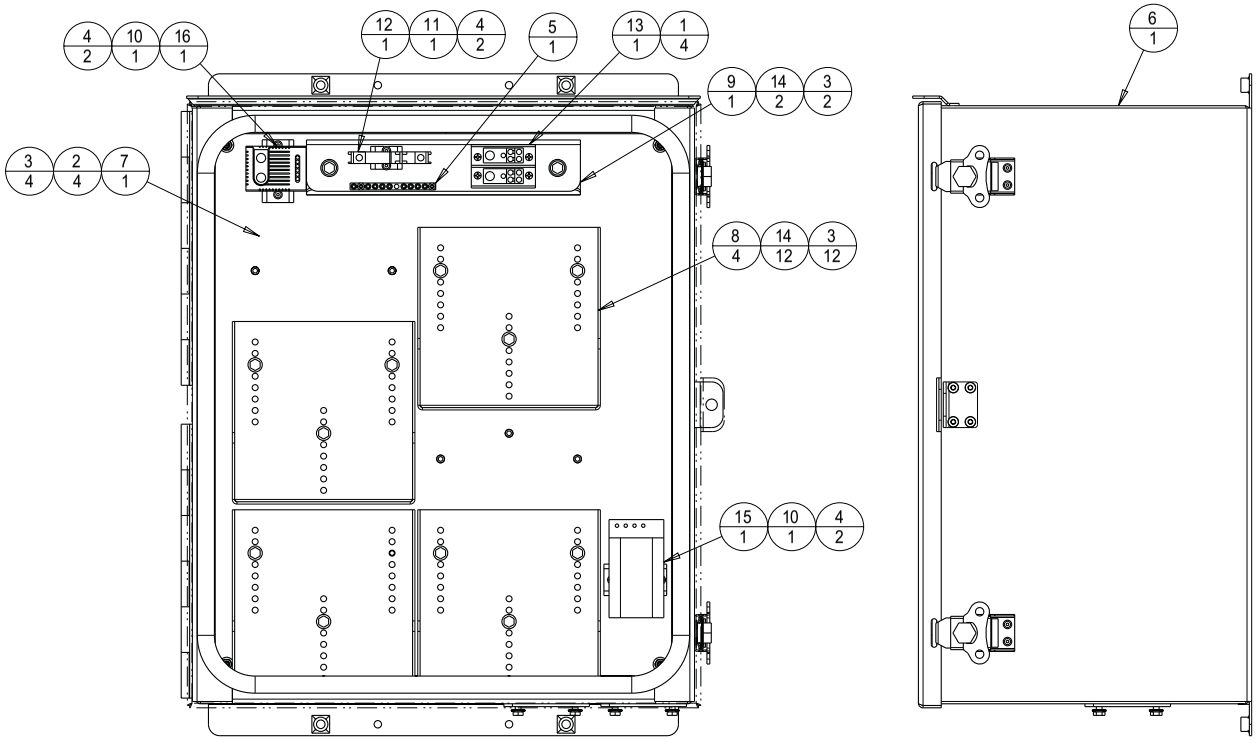

SCALE 0.125

MATERIAL	SCALE										
AS SHOWN	AS SHOWN	UNLESS OTHERWISE SPECIFIED DIMENSIONS ARE IN INCHES	XX ± 0.03 XXX ± 0.01	ANGLES ± 0.5° OTHER _____	Natural Resources Canada				DWG SIZE	1	PROTOTYPE RELEASE. ECN 2756.	24OCT2013	GCH
					DWN GCH	DATE DWN 24OCT2013	CHKD	DATE	A1	REV	DESCRIPTION	DATE	CHKD

14339 - GEOPHYSICAL STATION AC KIT ENCLOSURE

PART	DESCRIPTION	U/M	MFG NAME	MFG PART #
9000-0058	SCR HHC 1/4-20*.75"L SST 18-8	EA	SPAE-NAUR	CS-2004
9000-0104	SCR HHC 1/4-20*.75"L GR 8 STL YEL ZN CHR	EA	KNAFA	CH81412
9000-0106	SCR HHC 3/8-16*1.25"L GR 8 YEL ZN CHR PL	EA	SPAENAUR	SA-63
9000-1068	SCR MACH #8-32*.75"L P/PH SST	EA	SPAE-NAUR	424-472
9000-1090	SCR MACH #8-32*.5"L P/BH SST	EA	SPAE-NAUR	MS-2370P
9000-1099	SCR MACH #10-32*.5"L P/PH SST	EA	SPAE-NAUR	424-471
9000-1134	SCR MACH #8-32*2.0"L P/PH STL ZN PLD	EA	SPAE-NAUR	385-096
9000-4010	BOLT, L-HOOK ANCHOR, 1/2-13*8.05"LG, HDG	EA	MCMASTER-CARR	91603A150
9000-9046	STUD, SELF-CLINCH 1/4-20*.5"L SST	EA	PEM/SPAENAUR	FHS-0420-8/614-835
9000-9062	STUD, SELF-CLINCH 1/4-20*1.50"L SST	EA	PEM	FHS-0420-24
9001-0042	NUT 1/2-13 HEX STL HDG .75"AF	EA	SPAE-NAUR	155-334
9001-1032	NUT 1/4-20 NYLOK HEX SST	EA	SPAENAUR	HN-2037
9001-1042	NUT 3/8-16 NYLOK HEX GR8 YEL ZN CHR PLD	EA	KNAPP	NS837
9001-5019	NUT 3/8-16 RIVNUT .027-.150" ALY STL	EA	SPAE-NAUR	P970512
9001-5041	NUT #10-32 SELF-CLINCH SST (SHT .056")	EA	PEM/INTERFAST	CLSS-032-2
9001-5042	NUT 1/4-20 SELF-CLINCH SST	EA	PEM/INTERFAST	CLS-0420-2
9001-5047	NUT #8-32 SELF-CLINCH SST HDN (.056")	EA	PEM/INTERFAST	SP-832-2
9002-0045	WSHR #8 FLAT SST 18-8	EA	SPAE-NAUR	W-2070
9002-0066	WSHR 1/4" FLAT SAE SST	EA	SPAENAUR	658-015
9002-0073	WSHR 3/8" FLAT SAE .81"OD GR8 YEL ZN CHR	EA	KNAPP	WSAEH37ZD
9002-0074	WSHR 1/4" FLAT SAE GR8 YEL ZN CHR	EA	KNAPP	WSAEH14ZD
9002-0075	WSHR 1/2" FLAT 1-3/8"OD, .11"THK STL HDG	EA	SPAENAUR	656-005
9002-0076	WSHR #10 FLAT SAE YEL ZN CHR	EA	SPAE-NAUR	WFM05ZD
9002-0077	WSHR 1/4" FLAT BB SST	EA	KNAPP	WFEN1420S1
9002-1020	WSHR #10 LOCK REG SST	EA	SPAE-NAUR	W-2026
9002-1036	WSHR 3/8" LOCK REG GR8 YEL ZN CHR PLD	EA	KNAPP	WS837
9002-1037	WSHR 1/4" LOCK REG STL YEL ZN CHR PLD	EA	KNAPP	WS814
9002-4005	WSHR 1/4" SEALING STL/RBR	EA	SPAE NAUR	685-002
9004-0026	RIVET .188" .13-.25" POP SST DM HD.440"L	EA	SPAE-NAUR/KNAPP	310-804/KSSD64BS
9004-0030	RIVET .188" .13-.25" POP AL CLOSED END	EA	SPAE-NAUR/KNAPP	310-382/KAD64AH
9004-1101	PIN MAXLOK TRUSS/HD 3/16"DIA STL ZN PLD	EA	AVDEL	01903-70610
9004-1102	COLLAR, MAXLOK 3/16"DIA PIN	EA	AVDEL	01981-70600
9007-0002	WIRE 10 AWG TEW STR BLK	FT		
9007-0016	WIRE 18 AWG TEW STR WHT	FT		
9007-0017	WIRE 18 AWG TEW STR BLK	FT		
9007-0021	WIRE 10 AWG TEW STR RED	FT		
9007-0022	WIRE 10 AWG TEW STR GRN	FT		
9007-6001	CABLE, COAXIAL CA195, TNC PLUG MALE 20FT	EA	AIR802	CA195-B-TNPTNP-020F
9007-6002	CABLE, COAXIAL CA195, TNC PLUG MALE 15F	EA	AIR802	CA195-B-TNPTNP-015F
9010-0017	TERM RG #10 .25"STUD INSUL	EA	PANDUIT	PV10-14R-L
9010-0078	ZTERM QDISC #18 FEMALE INSUL SMALL	EA	PANDUIT	DNF18-110FIB-C
9010-0079	FERRULE #18 NON INSULATED	EA	PANDUIT	F77-10-M
9010-0083	FERRULE #10 NON INSULATED	EA	PANDUIT	F82-12-M
9011-0001	TIE, CABLE, NY, MINI, 4"OL	EA	PANDUIT	PLT 1M
9017-0010	FAN,AXIAL,32SCFM,115VAC,3.15"SQ	EA	NMB MINEBEA	3115PS-12T-B30-A00
9018-0022	COVER, BLANK, GALV STL	EA	IBERVILLE	BC-11-C4
9018-0024	BOX, RECEPTACLE, 2X4X2	EA	IBERVILLE	BC-1110
9018-0025	BOX, SQ 4*4*1.5" GALV STL	EA	STEEL CITY	52151-1/2
9018-0032	SW COVER, 4*4" GALV STL, 2 DECORA/GFCI	EA	IBERVILLE	BC-8368
9019-0042	CONDUIT, FLEX, 3/4" LIQ-TITE, ARMOURED	FT	HYDROTITE/KAF-TECH	755130

9019-1005	CONN, LIQ-TITE, 3/4" 90 DEG, AL	EA	T&B	5253AL
9019-1012	CONN, LIQ-TITE, 3/4" STRAIGHT, AL	EA	T&B	5233AL
9019-1018	WSHR, SEALING RING 3/4"DIA METAL LIQ-TIT	EA	T&B	5263
9019-1023	CONN, MARRETTE #33	EA	MARRETTE	33P
9019-1031	CONN, STRAIN RELIEF, 3/4NPT THREA	EA	SCEPTER	TSRC15
9019-3008	GRD, BAR, 9 WIRES, AL, 14-10GA CU	EA	SQD	PK9GTA
9019-4004	BSHG, 0.5" PLASTIC KNOCK OUT	EA	T&B	3210
9030-0028	SEAL, BULB RS SECT PUSH ON TRIM .09"GRIP	FT	SPAE-NAUR	825-068
9042-0071	CB,1P,40A,80V DC,DIN RAIL MNT,13MMWIDE	EA	CBI ELECTRIC	QY-1-40A
9043-0030	BLOCK,DISTR,2POLE,185A,1IN,4OUT	EA	FERRAZ SHAWMUT	63132
9045-0258	CPLG, 3/4" NPT SCH 40, AL	EA	MCMASTER CARR	44705K56
9045-0259	UNION, 3/4" NPT CLASS 150, AL	EA	MCMASTER CARR	44705K245
9045-0260	PIPE, 3/4"NPT SCH 40 AL	FT		
9046-0046	LATCH, ROTARY ACTION, CAM, SST	EA	SOUTHCO	K5-2857-52
9066-1022	THERMOSTAT DUAL,0-60C, NC-OOR,NO-COR,DIN	EA	STEGO	ZR 01172.0-00
9066-1023	HEATER, CABINET, 50W, AC/DC 120-240V	EA	STEGO	06000.0-00
9067-0004	THERMAL CONDUCTIVE COMPOUND	OZ	WAKEFIELD ENG INC.	120-2
9072-0023	SPCR, THRU-HOLE 5/8OD,.252ID*.75", NYLON	EA	McMASTER CARR	94639A177
9073-0021	HINGE, CONT AL 2W*.12T* 12"L	EA	McMASTER CARR	1581A152
9079-0006	RCPT, DUPLEX 15A-125V,SURGE W IND LED	EA	LEVITON	5280-B
9079-0007	PLUG, NEMA STRGT BLADE,15A 125V,NO GRND	EA	LEVITON	101-EP
9085-0015	UNISTRUT ALUM CHAN 1.63*1.63" 12 GA	FT	MC MASTER-CARR	3230T66
9085-0016	PIPE CLAMP, 3/4NPT, STRUT MNT, SST	EA	MCMASTER CARR	3115T43
9088-1001	STOP, END, PLASTIC, 10MM W, DIN RAIL	EA	WEIDMULLER	0383560000 EW35

AC Kit Photographs

Front View

Side View

View of Cable entry to instrument box

Interior view of instrument box (instruments and power supply not in scope of contract).

DC Kit Photographs

DC Kit Side view

DC Kit Battery Box interior

Solar panels and batteries are not in scope of contract.

TITLE	DRAWING NUMBER	REV.
DIN RAIL JB BOX	19035	1 SHT. 1/1

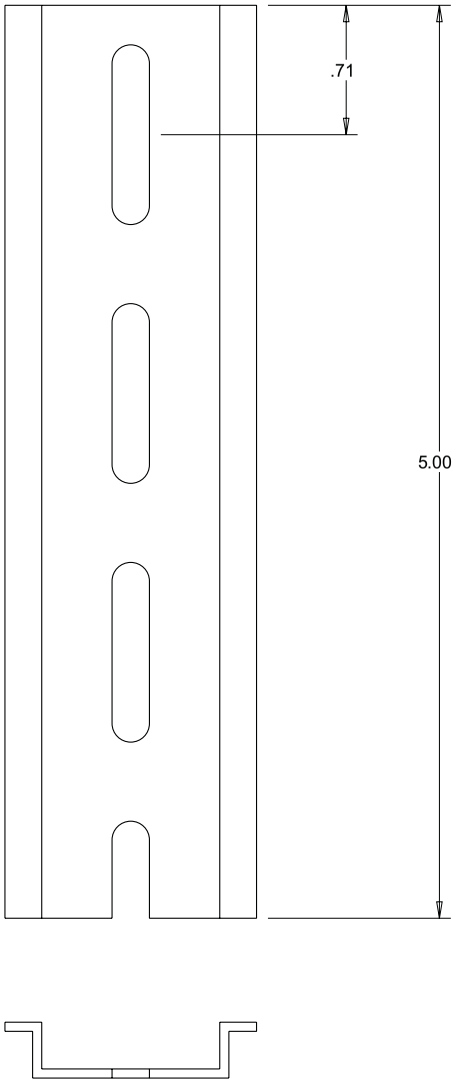

MATERIAL	SCALE										
DIN RAIL HOVEY P/N 9088-0001	AS SHOWN	UNLESS OTHERWISE SPECIFIED DIMENSIONS ARE IN INCHES	XX ± 0.03 XXX ± 0.01	ANGLES ± 0.5° OTHER _____	Natural Resources Canada				DWG SIZE	1	PROTOTYPE RELEASE, REF ECN 2731	29 AUG 2013	CCB
					DWN CCB	DATE DWN 29 AUG 2013	CHKD	DATE	A1	REV	DESCRIPTION	DATE	CHKD

INDEX	PART#	DESCRIPTION	QTY	
1	19040	BATTERY BOX ASSY	1	
2	19048-01	SOLAR PANEL STRUCTURE, ASSY	1	
3	19063	CONTROL PANEL, POPULATED, NRCANN DC KIT	1	3
4	19066-01	YAGI ANTENNA HARNESS	1	3
5	19066-02	UPPER SOLAR PANEL HARNESS	1	3
6	19066-03	LOWER SOLAR PANEL HARNESS	1	3
7	19066-04	BATTERY / GPS HARNESS	1	3
8	19066-05	GROUND WIRE, JB	1	3

TITLE	DRAWING NUMBER	REV.
2 GEOPHYSICAL STATION, DC KIT	19039	3
		SHT. 1/1

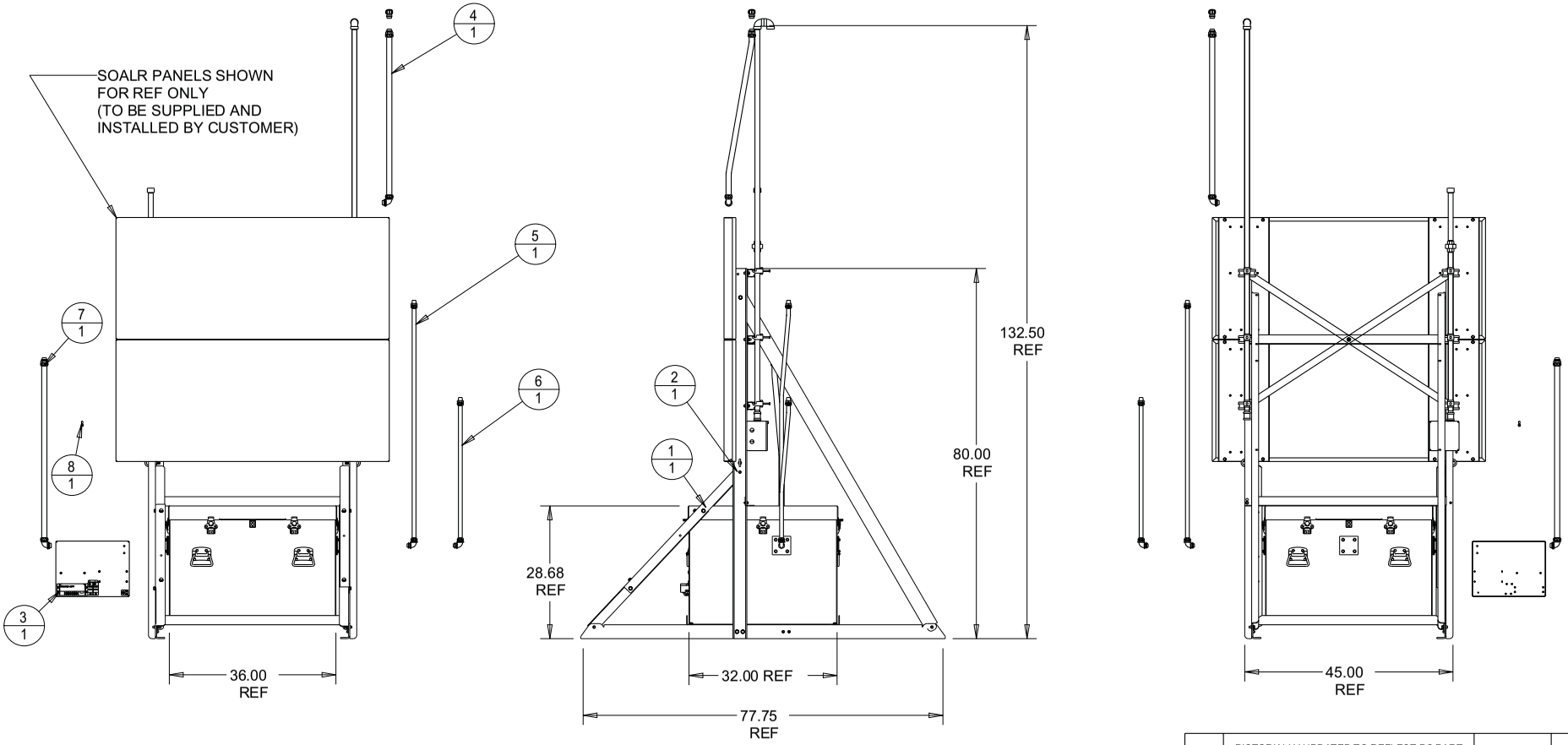

SCALE 0.030

REV	DESCRIPTION	DATE	CHKD
3	PICTORIALLY UPDATED TO REFLECT PC PART CHANGES, HARNESSES AND GND WIRE AND CONTROL PANEL ADDED, REF ECN 2731	4 SEP 2013	CCB
2	TITLE CHANGED "GEOPHYSICAL STATION KIT" WAS "TAURUS DC KIT ASSY", W/PICTORIAL UPDATES, REF ECN 2731	4 JUL 2013	CCB
1	PROTOTYPE RELEASE, REF ECN 2731	19 JUN 2013	CCB

MATERIAL
SEE INDIVIDUAL PART DRAWINGS

SCALE
AS SHOWN

UNLESS OTHERWISE SPECIFIED DIMENSIONS ARE IN INCHES
XX ± 0.03
XXX ± 0.01
ANGLES ± 0.5°
OTHER _____

Natural Resources Canada

DWN	DATE DWN	CHKD	DATE
CCB	19 JUN 2013		

DWG SIZE
A1

INDEX	PART#	DESCRIPTION	QTY	
1	9002-4005	WSHR 1/4" SEALING STL/RBR	12	2
2	9004-1101	PIN MAXLOK TRUSS/HD 3/16"DIA STL ZN PLD	48	3
3	9004-1102	COLLAR, MAXLOK 3/16"DIA PIN	48	3
4	9030-0026	GSKT, URETHANE .125"THK*0.375" S/ADH	12	2
5	9046-0024	LATCH, ROTARY ACTION, HEX CAM	6	
6	15755-03	HASP, LOCKING BAR, SST, HF400/900	2	
7	19041	BATTERY BOX BODY, ASSY	1	
8	19044	BATTERY BOX, LID	1	
9	19045-01	CONDUIT PLATE, 3/4 PIPE	2	3
10	19045-02	COVER PLATE	3	2
11	19045-03	CONDUIT PLATE, 1/2 PIPE	1	
12	19045-04	CONDUIT PLATE, 1" PIPE	2	2
13	19046-01	INSULATION, POLYSTYRENE FOAM, 2"	2	3
14	19046-02	INSULATION, POLYSTYRENE FOAM, 2"	2	3
15	19046-03	INSULATION, POLYSTYRENE FOAM, 2"	1	3
16	19046-04	INSULATION, POLYSTYRENE FOAM, 1"	2	3
17	19046-05	INSULATION, POLYSTYRENE FOAM, 1"	2	3
18	19046-06	INSULATION, POLYSTYRENE FOAM, 2"	1	3
19	19046-07	INSULATION, POLYSTYRENE FOAM, 2"	4	3
20	19047-01	PLYWOOD, SPF, STD FINISH, 1/4"	1	3
21	19047-02	PLYWOOD, SPF, STD FINISH, 1/4"	1	3
22	MCMASTER_CARR_1647A350	HANDLE, SURFACE MNT, FOLDING, PULL	4	
23	MCMASTER_CARR_92620A540	SCR HHC 1/4-20*.75"L GR 8 STL YELLOW ZN CHROMATE PLD	12	3
	9030-0028	SEAL, BULB RS SECT PUSH ON TRIM, .125 MAX	126"	
	9014-0015	ADH, 'BLACK MAX' 1.0 OZ BOTTLE	A/R	3
		CONTACT CEMENT	A/R	3

TITLE	DRAWING NUMBER	REV. 3
BATTERY BOX, ASSY	19040	SHT. 1/2

3

APPLY CONTINUOUS LENGTH OF BULB SEAL AROUND TOP LIP WITH SEAM AT SIDE CENTER, BOND GASKET SEAM WITH BLACK MAX ADH 9014-0015.

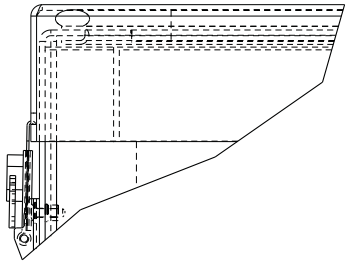

DETAIL A
SCALE 0.250

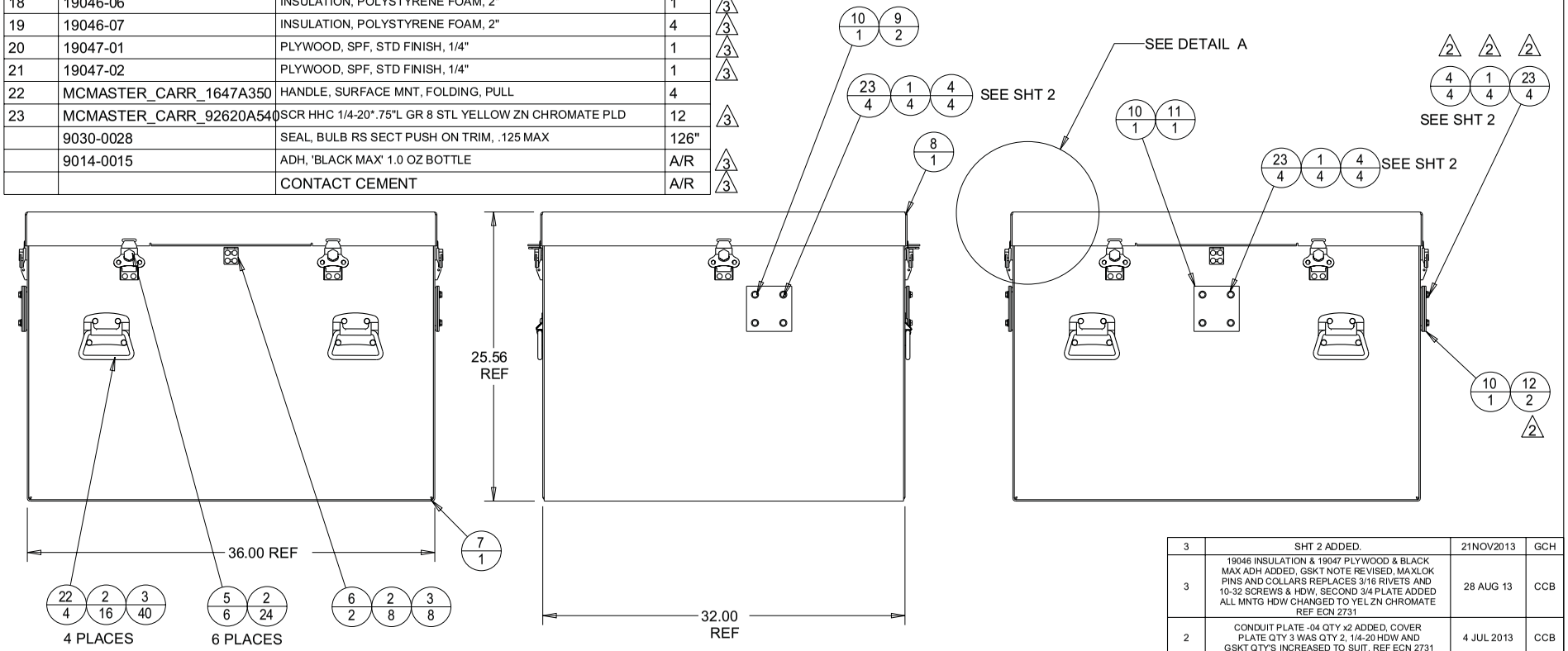

REV	DESCRIPTION	DATE	CHKD
3	SHT 2 ADDED.	21NOV2013	GCH
3	19046 INSULATION & 19047 PLYWOOD & BLACK MAX ADH ADDED, GSKT NOTE REVISED, MAXLOK PINS AND COLLARS REPLACES 3/16 RIVETS AND 10-32 SCREWS & HDW, SECOND 3/4 PLATE ADDED ALL MNTG HDW CHANGED TO YEL ZN CHROMATE REF ECN 2731	28 AUG 13	CCB
2	CONDUIT PLATE -04 QTY x2 ADDED, COVER PLATE QTY 3 WAS QTY 2, 1/4-20 HDW AND GSKT QTY'S INCREASED TO SUIT, REF ECN 2731	4 JUL 2013	CCB
1	PROTOTYPE RELEASE, REF ECN 2731	19 JUN 2013	CCB

MATERIAL
SEE INDIVIDUAL PART DRAWINGS

SCALE
AS SHOWN

UNLESS OTHERWISE SPECIFIED DIMENSIONS ARE IN INCHES
XX ± 0.03
XXX ± 0.01
ANGLES ± 0.5°
OTHER _____

Natural Resources Canada

DWN	DATE DWN	CHKD	DATE
CCB	19 JUN 2013		

DWG SIZE A1

TITLE	DRAWING NUMBER	REV.
BATTERY BOX, ASSY	19040	3
		SHT. 2/2

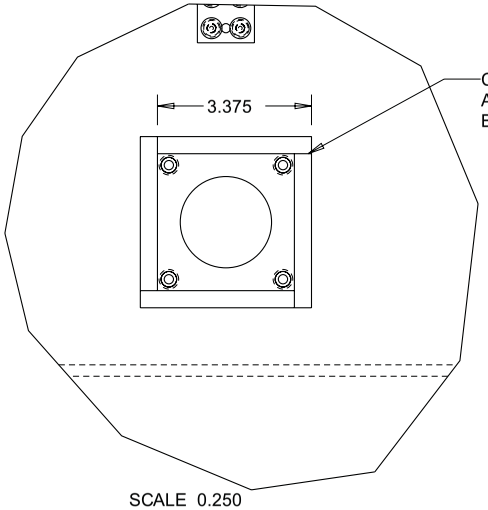

CUT GASKET IN 3.375" LONG STRIPS.
APPLY TO BOX, NOT PLATE.
BOND JOINTS WITH CONTACT CEMENT.

SCALE 0.250

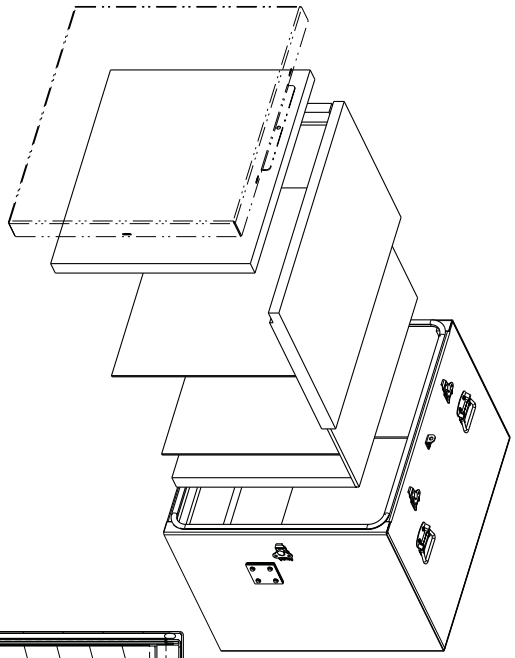

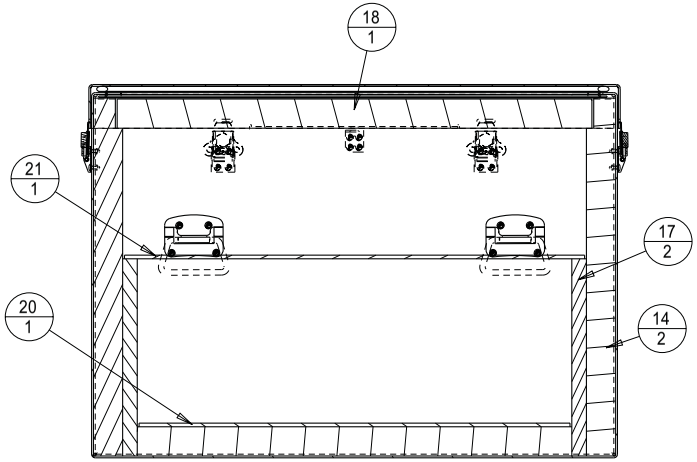

SECTION X-X
SCALE 0.080

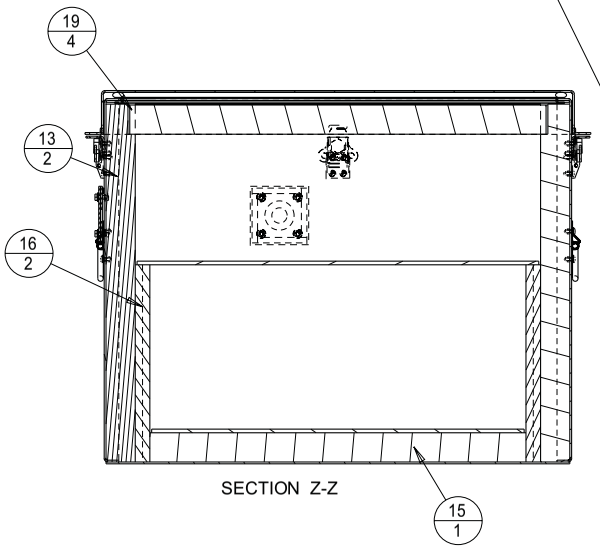

SECTION Z-Z

MATERIAL	SCALE				Natural Resources Canada				DWG SIZE	3	SHT 2 ADDED. INSULATION PLACEMENTS ADDED.	21NOV2013	GCH
AS SHOWN	AS SHOWN	UNLESS OTHERWISE SPECIFIED DIMENSIONS ARE IN INCHES	XX ± 0.03 XXX ± 0.01	ANGLES ± 0.5° OTHER _____	DWN CCB	DATE DWN 19 JUN 2013	CHKD	DATE	A1	REV	DESCRIPTION	DATE	CHKD

INDEX	PART#	DESCRIPTION	QTY
1	9001-5042	NUT 1/4-20 SELF-CLINCH SST	12
2	19042	BATTERY BOX BODY	1
3	19043-01	END PANEL, BATTERY BOX	1
4	19043-02	END PANEL, BATTERY BOX, BLANK	1

TITLE	DRAWING NUMBER	REV.
BATTERY BOX, BODY ASSY	19041	2
		SHT. 1/1

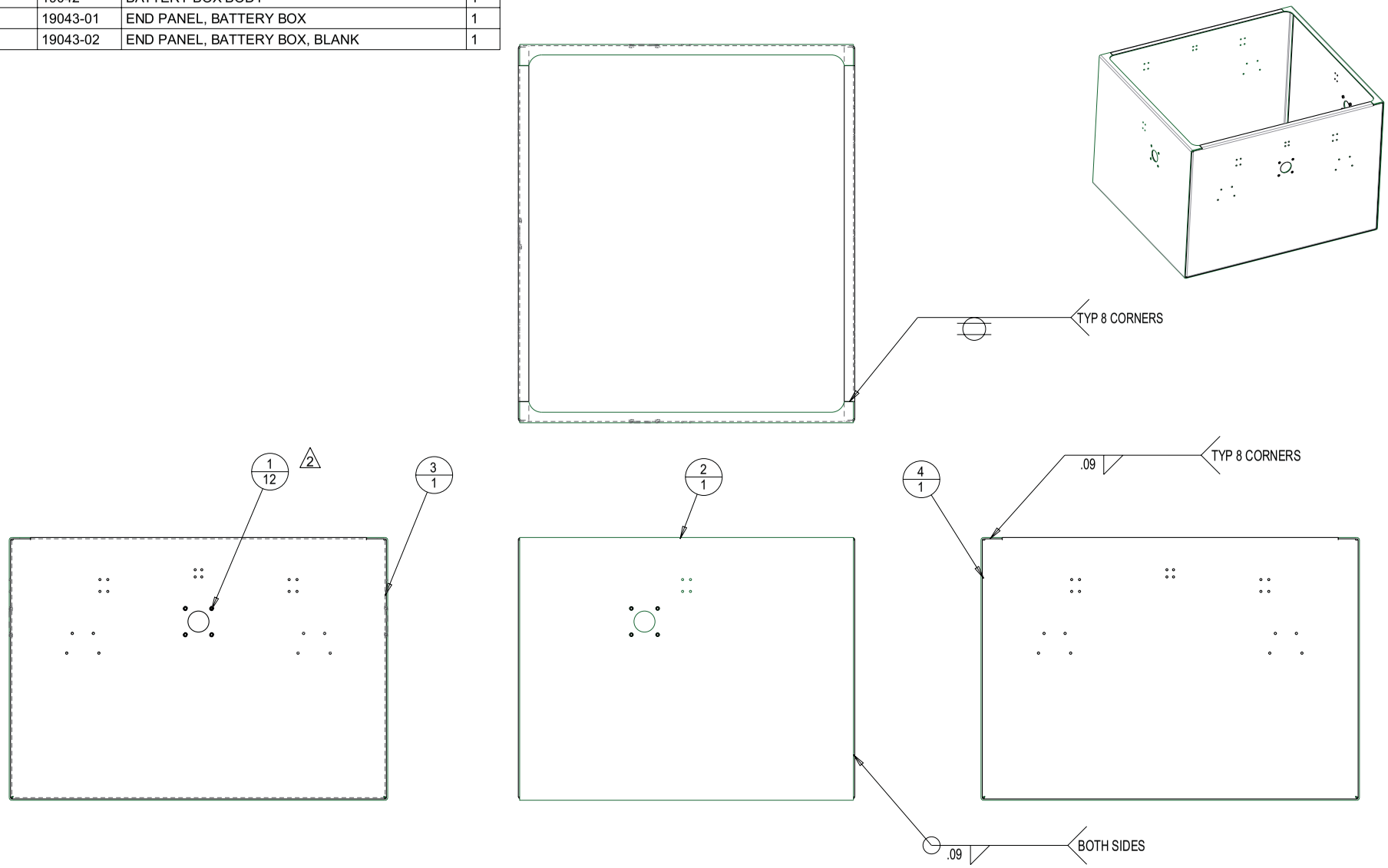

REV	DESCRIPTION	DATE	CHKD
2	1/4-20 PEM NUT QTY 12 WAS QTY 8 THIRD CONDUIT PLATE HOLES SHOWN REF ECN 2731	4 JUL 2013	CCB
1	PROTOTYPE RELEASE, REF ECN 2731	24JUNE2013	CCB

MATERIAL
SEE INDIVIDUAL PART DRAWINGS

SCALE
AS SHOWN
SCALE 0.075

UNLESS OTHERWISE SPECIFIED
DIMENSIONS ARE IN INCHES

XX ± 0.03
XXX ± 0.01

ANGLES ± 0.5°
OTHER _____

Natural Resources Canada

DWN	DATE DWN	CHKD	DATE
CCB	24JUN2013		

DWG SIZE
A1

TITLE	DRAWING NUMBER	REV. 2
BATTERY BOX, BODY	19042	SHT. 1/1

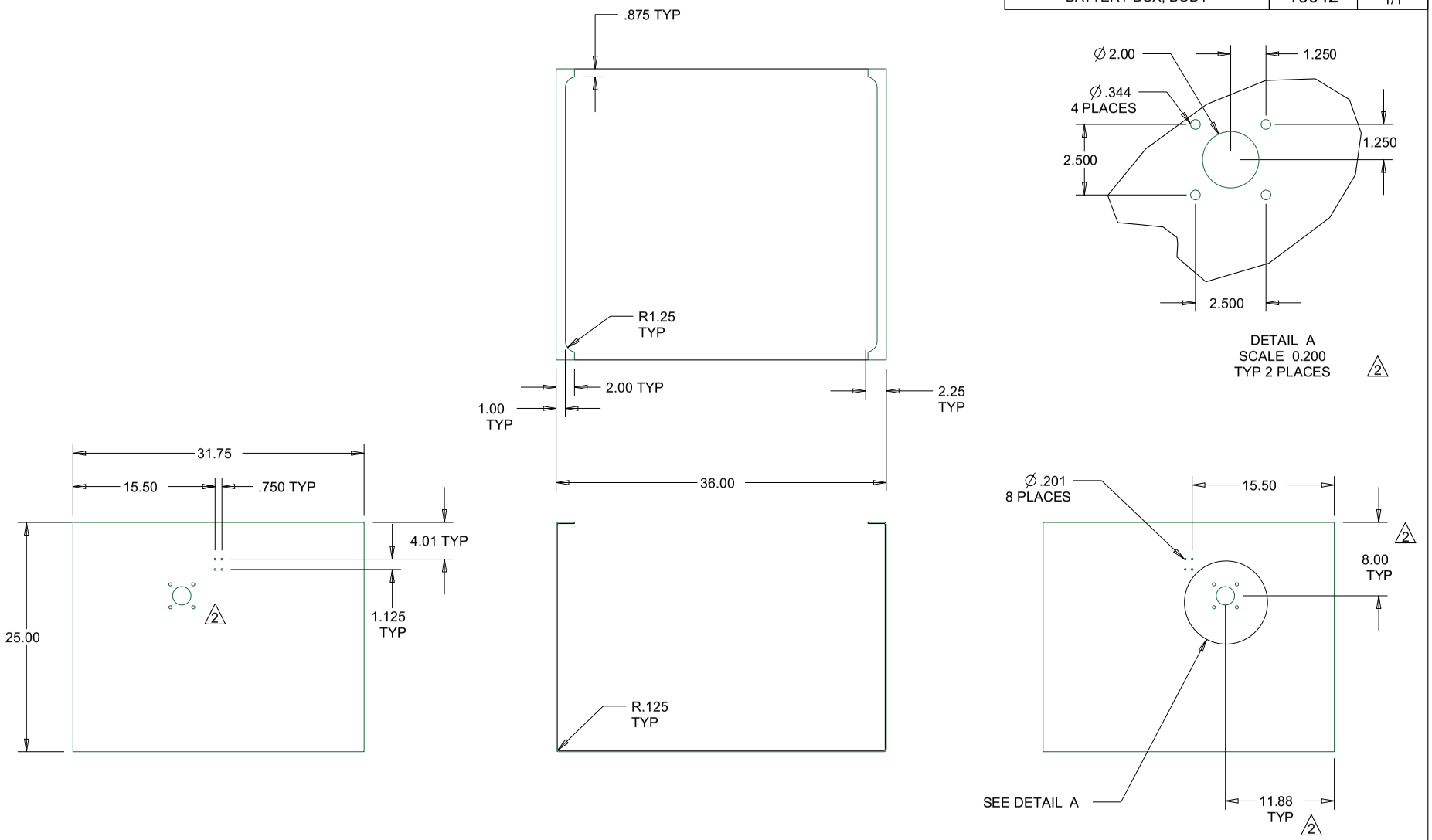

SCALE 0.065

MATERIAL	SCALE											
.125 THK ALUMINIUM 5052-H32	AS SHOWN	UNLESS OTHERWISE SPECIFIED DIMENSIONS ARE IN INCHES	XX ± 0.03 XXX ± 0.01	ANGLES ± 0.5° OTHER _____	Natural Resources Canada	DWN CCB	DATE DWN 24JUN2013	CHKD	DATE	DWG SIZE A1		

REV	DESCRIPTION	DATE	CHKD
2	SECOND SET OF CONDUIT HOLES ADDED REF ECN 2731	4 JUL 2013	CCB
1	PROTOTYPE RELEASE, REF ECN 2731	24JUNE2013	CCB

TITLE	DRAWING NUMBER	REV.
END PANEL, BATTERY BOX	19043	2
		SHT. 1/1

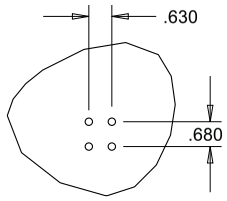

DETAIL C
SCALE 0.200

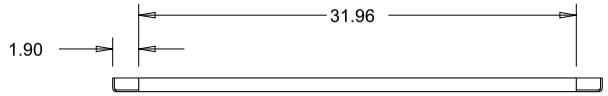

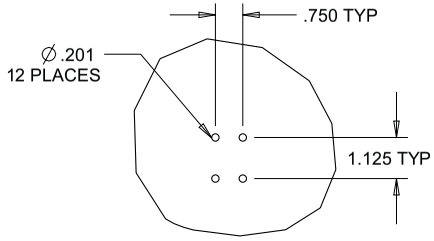

DETAIL A
SCALE 0.200
TYP 2 PLACES

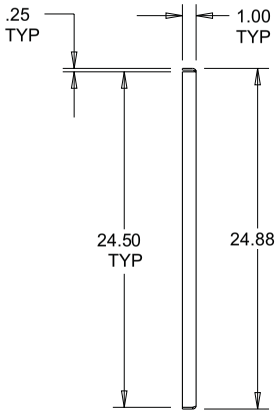

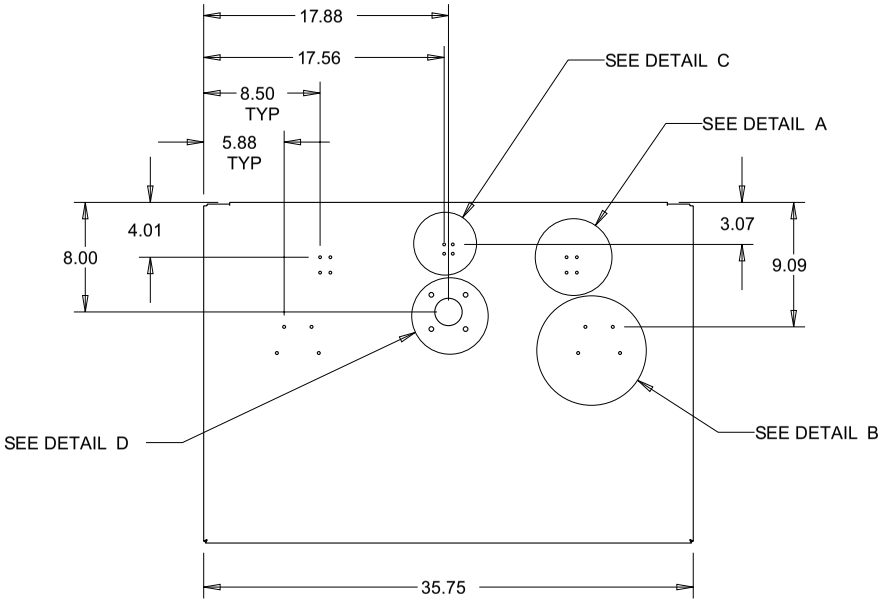

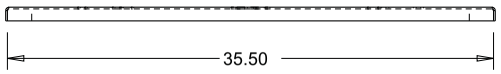

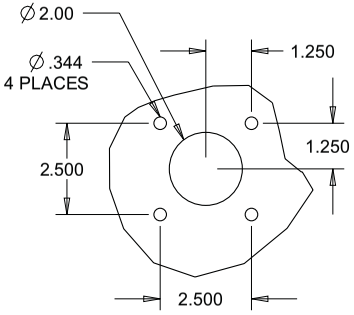

DETAIL D
SCALE 0.200

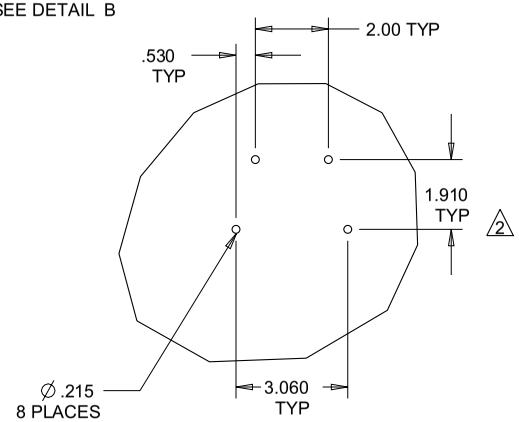

DETAIL B
SCALE 0.200
TYP 2 PLACES

19043-01
END PANEL, BATTERY BOX (AS SHOWN)

19043-02
END PANEL, BATERY BOX
(W/O DETAIL "D" HOLES)

SCALE 0.075

REV	DESCRIPTION	DATE	CHKD
2	HANDLE HOLE DIM 1.91 WAS 1.875 REF ECN 2731	29 AUG 2013	CCB
1	PROTOTYPE RELEASE, REF ECN 2731	24JUNE2013	CCB

MATERIAL	SCALE				Natural Resources Canada				DWG SIZE
.125 THK ALUMINIUM 5052-H32	AS SHOWN	UNLESS OTHERWISE SPECIFIED DIMENSIONS ARE IN INCHES	XX ± 0.03 XXX ± 0.01	ANGLES ± 0.5° OTHER _____	DWN CCB	DATE DWN 24JUN2013	CHKD	DATE	A1

TITLE	DRAWING NUMBER	REV.
BATTERY BOX, LID	19044	1
		SHT. 1/1

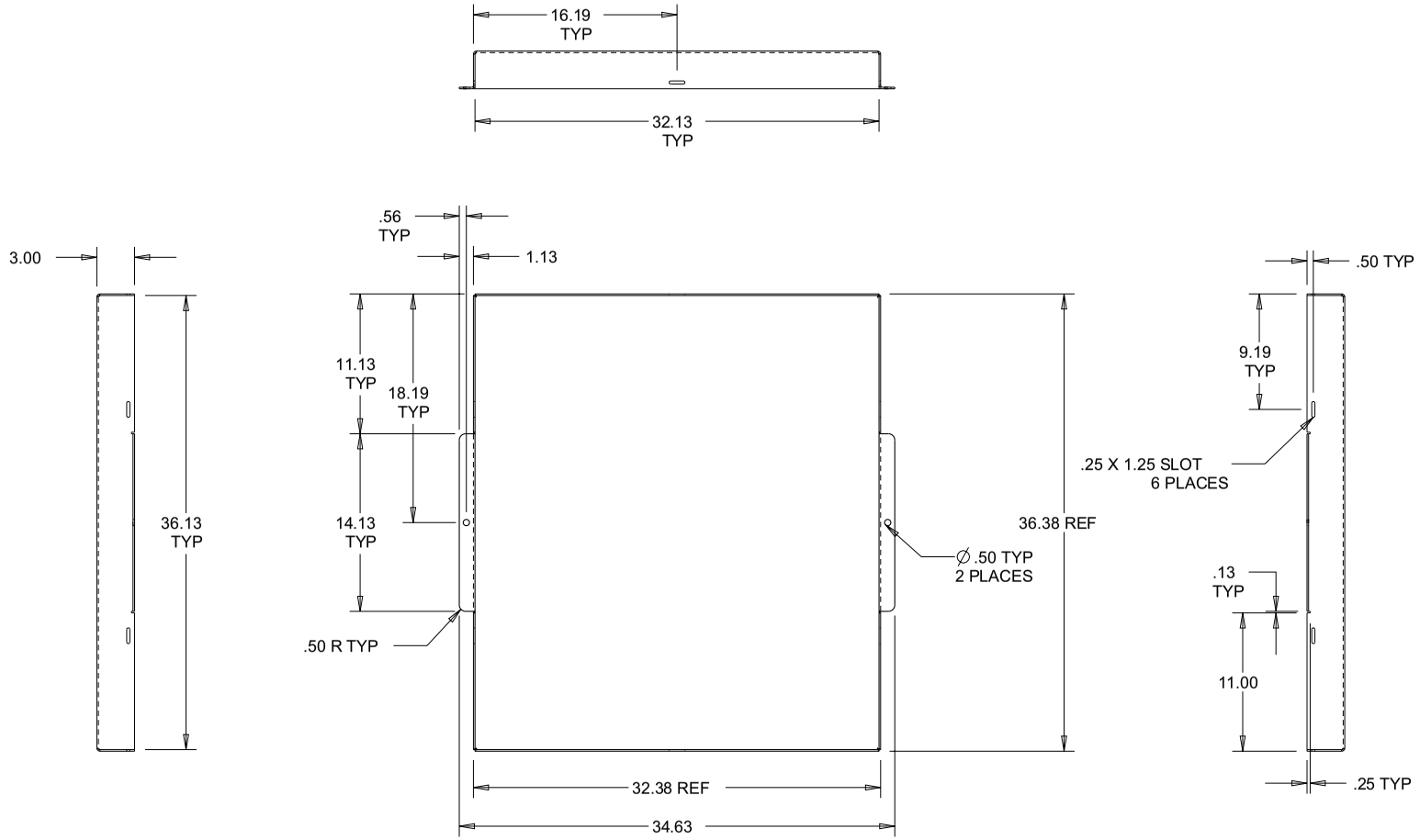

SCALE 0.075

MATERIAL	SCALE				Natural Resources Canada				DWG SIZE	1	PROTOTYPE RELEASE, REF ECN 2731	24JUNE2013	CCB
.125 THK ALUMINIUM 5052-H32	AS SHOWN	UNLESS OTHERWISE SPECIFIED DIMENSIONS ARE IN INCHES	XX ± 0.03 XXX ± 0.01	ANGLES ± 0.5° OTHER _____	DWN CCB	DATE DWN 24JUN2013	CHKD	DATE	A1	REV	DESCRIPTION	DATE	CHKD

TITLE	DRAWING NUMBER	REV. 2
CONDUIT / COVER PLATE	19045	SHT. 1/4

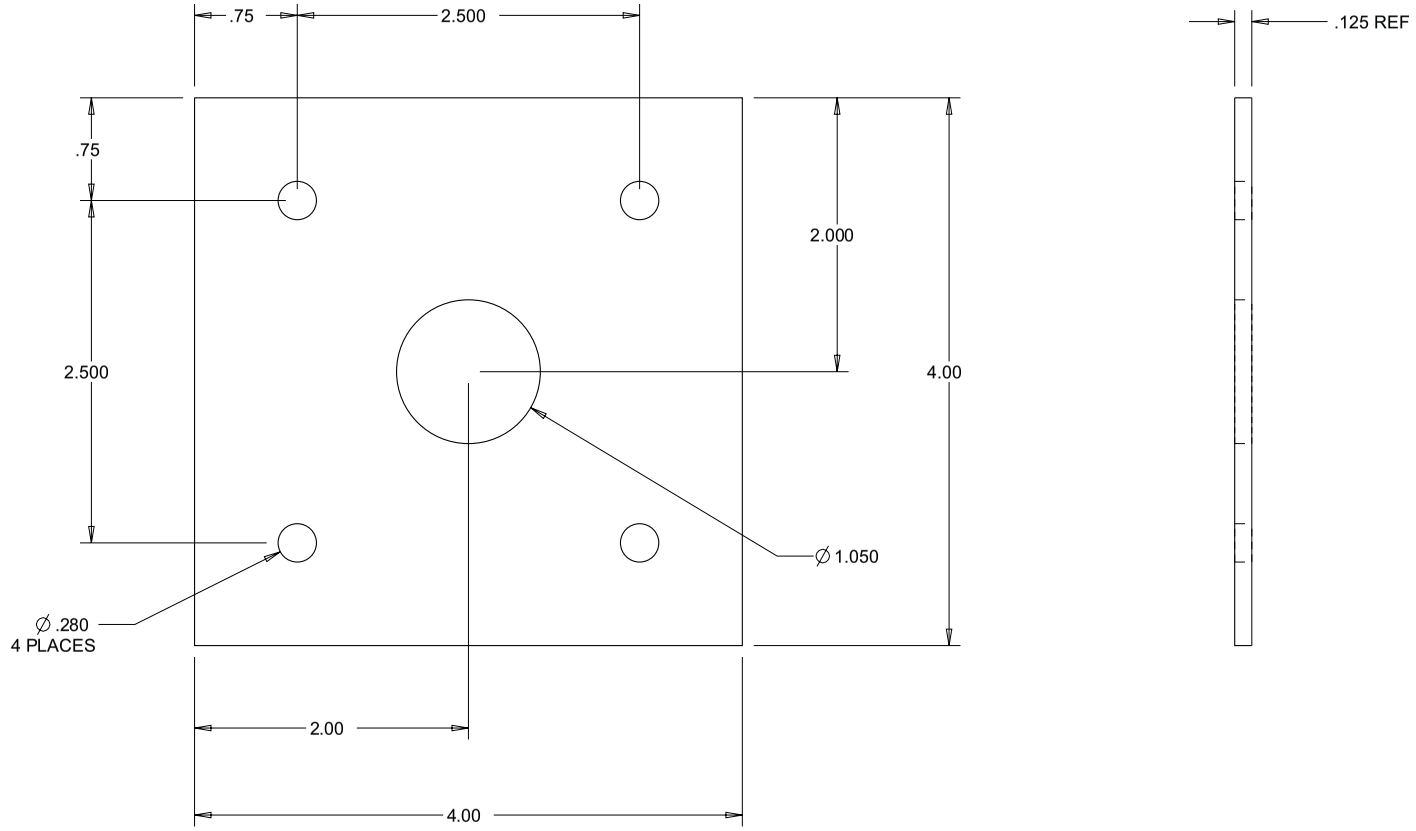

19045-01
CONDUIT PLATE, 3/4 PIPE

SCALE 0.750

MATERIAL	SCALE												
.125 THK ALUMINIUM 5052-H32	AS SHOWN	UNLESS OTHERWISE SPECIFIED DIMENSIONS ARE IN INCHES	XX ± 0.03 XXX ± 0.01	ANGLES ± 0.5° OTHER _____	Natural Resources Canada				DWG SIZE A1	2	SEE SHT 4 FOR CHANGES REF ECN 2731	4 JUL 2013	CCB
					DWN CCB	DATE DWN 25JUN2013	CHKD	DATE		1	PROTOTYPE RELEASE, REF ECN 2731	25JUNE2013	CCB
										REV	DESCRIPTION	DATE	CHKD

TITLE	DRAWING NUMBER	REV. 2
CONDUIT / COVER PLATE	19045	SHT. 2/4

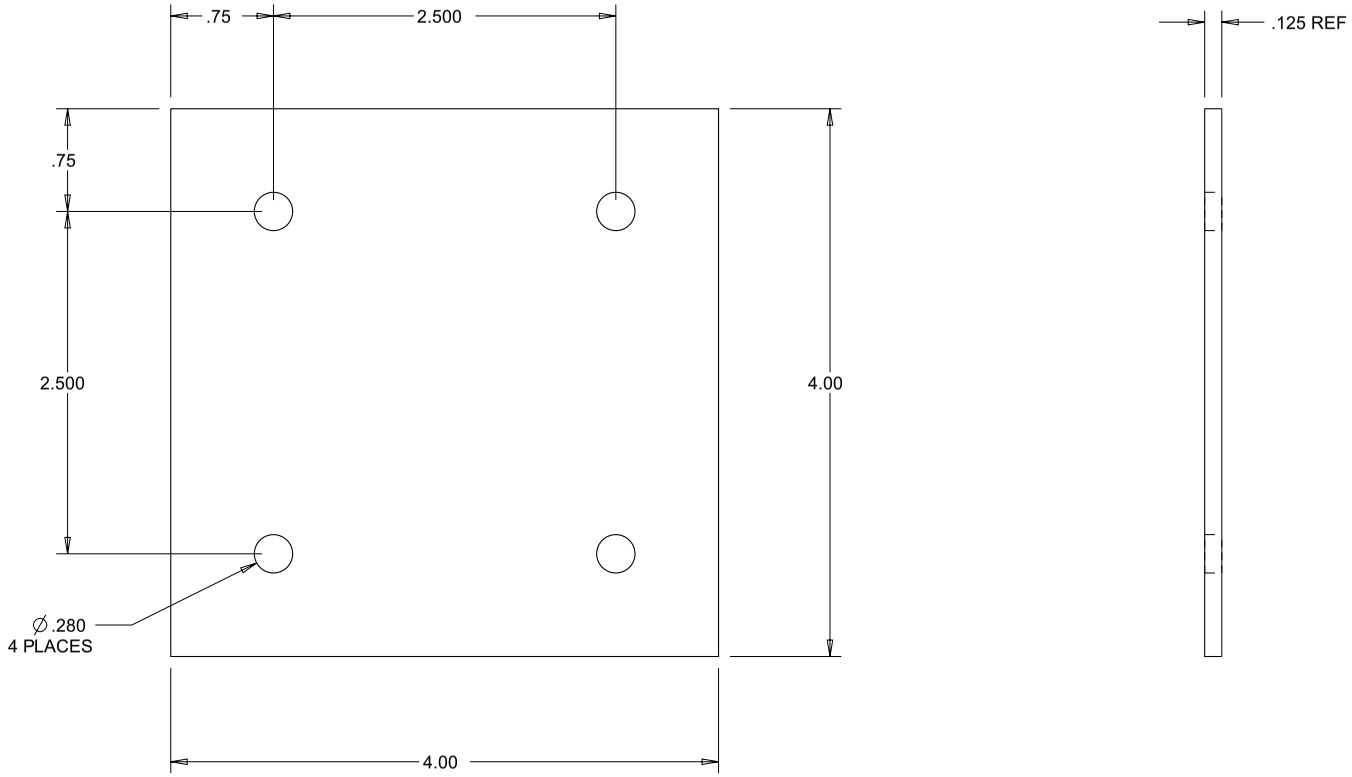

19045-02
COVER PLATE

SCALE 0.750

MATERIAL	SCALE											
.125 THK ALUMINIUM 5052-H32	AS SHOWN	UNLESS OTHERWISE SPECIFIED DIMENSIONS ARE IN INCHES	XX ± 0.03 XXX ± 0.01	ANGLES ± 0.5° OTHER _____	Natural Resources Canada				DWG SIZE A1	2	SEE SHT 4 FOR CHANGES REF ECN 2731	4 JUL 2013	CCB
					DWN CCB	DATE DWN 25JUN2013	CHKD	DATE		1	PROTOTYPE RELEASE, REF ECN 2731	25JUNE2013	CCB
										REV	DESCRIPTION	DATE	CHKD

TITLE	DRAWING NUMBER	REV. 2
CONDUIT / COVER PLATE	19045	SHT. 3/4

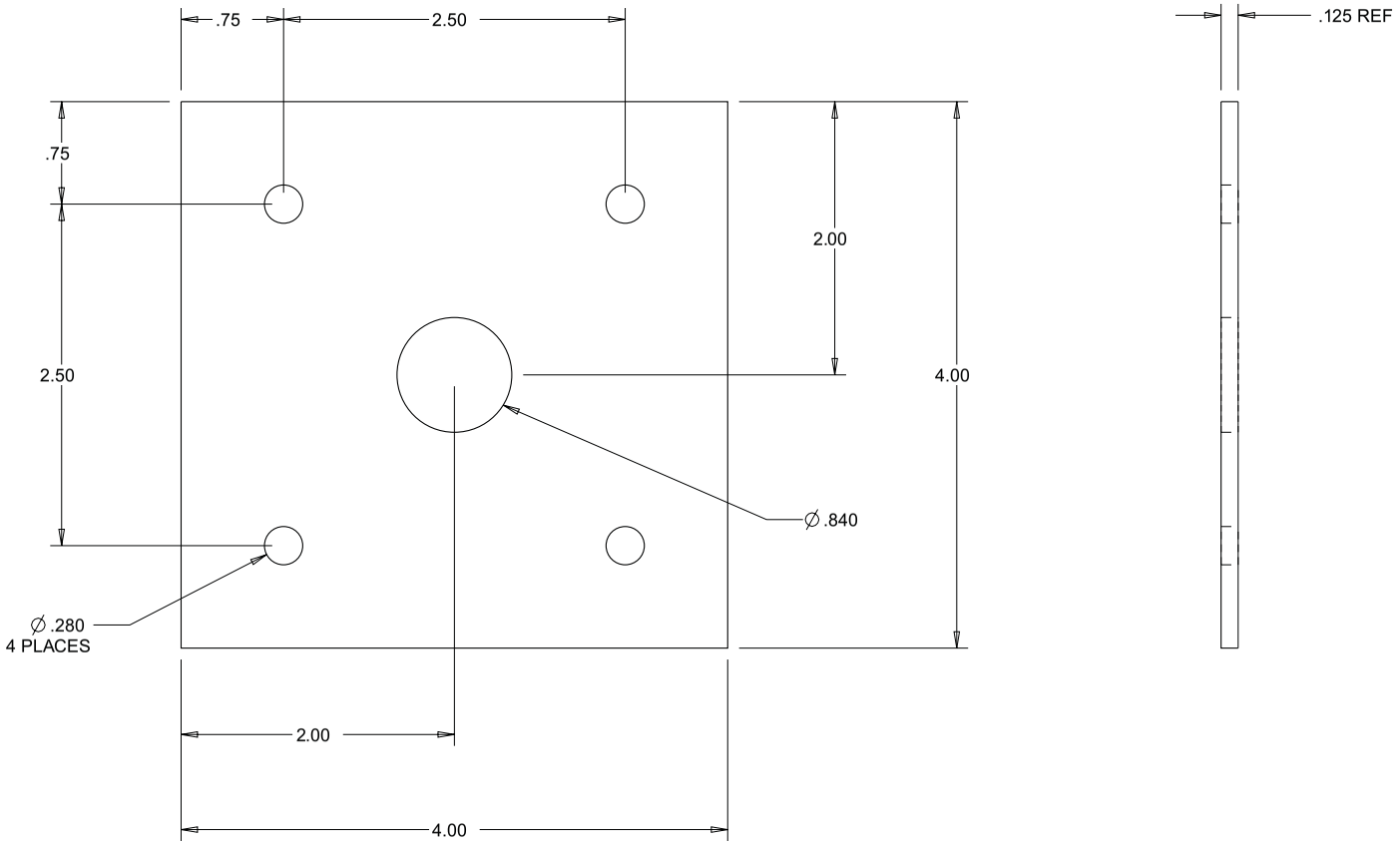

19045-03
CONDUIT PLATE, 1/2 PIPE

SCALE 0.750

MATERIAL	SCALE											
.125 THK ALUMINIUM 5052-H32	AS SHOWN	UNLESS OTHERWISE SPECIFIED DIMENSIONS ARE IN INCHES	XX ± 0.03 XXX ± 0.01	ANGLES ± 0.5° OTHER _____	Natural Resources Canada				DWG SIZE A1	2	SEE SHT 4 FOR CHANGES REF ECN 2731	4 JUL 2013	CCB
					DWN CCB	DATE DWN 25JUN2013	CHKD	DATE		1	PROTOTYPE RELEASE, REF ECN 2731	25JUNE2013	CCB
										REV	DESCRIPTION	DATE	CHKD

TITLE	DRAWING NUMBER	REV. 2
CONDUIT / COVER PLATE	19045	SHT. 4/4

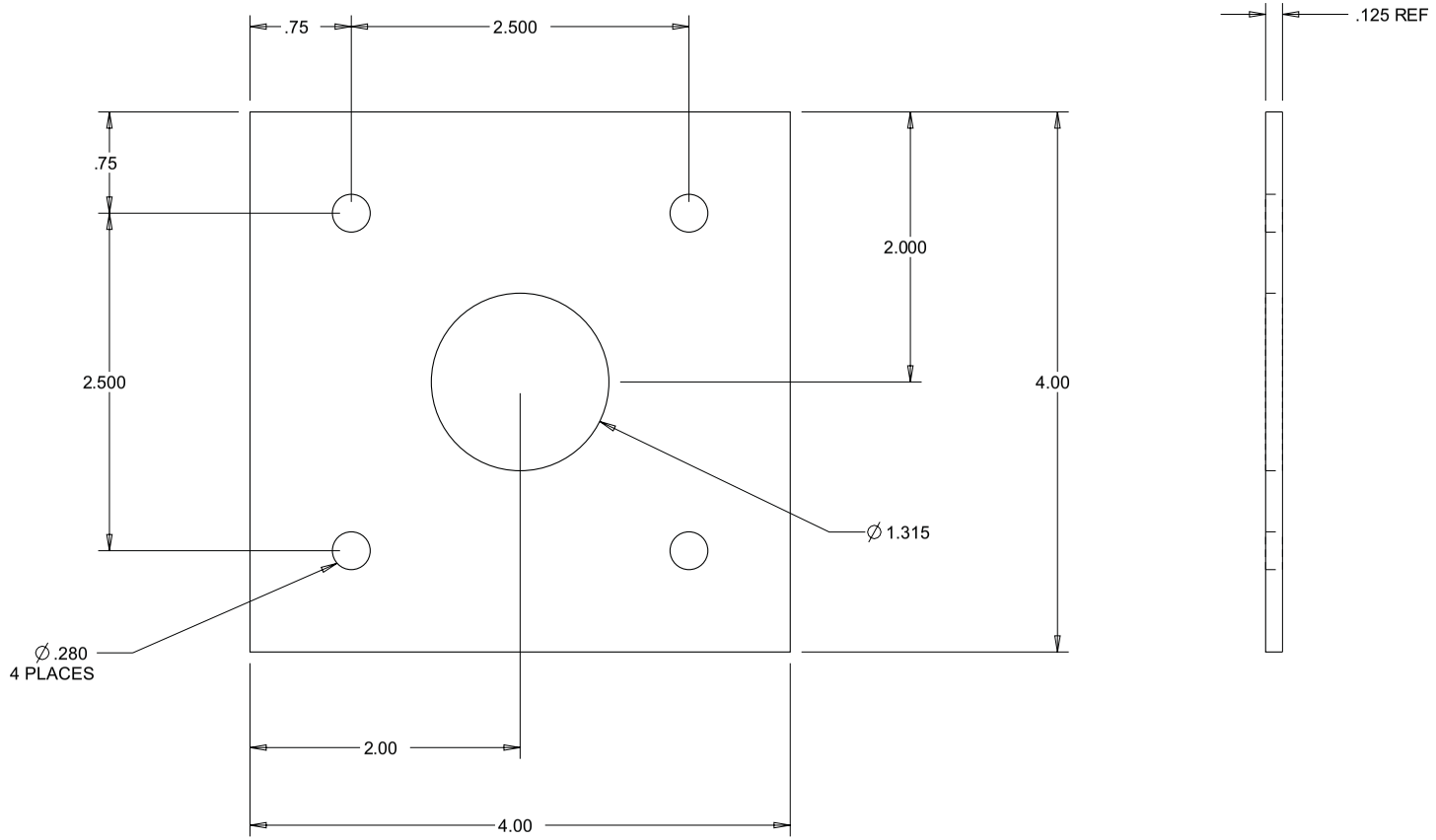

19045-04
CONDUIT PLATE, 1" PIPE

SCALE 0.750

MATERIAL	SCALE				Natural Resources Canada				DWG SIZE	2	VAR -04 CREATED, REF ECN 2731	4 JUL 2013	CCB
.125 THK ALUMINIUM 5052-H32	AS SHOWN	UNLESS OTHERWISE SPECIFIED DIMENSIONS ARE IN INCHES	XX ± 0.03 XXX ± 0.01	ANGLES ± 0.5° OTHER _____	DWN CCB	DATE DWN 25JUN2013	CHKD	DATE	A1	REV	DESCRIPTION	DATE	CHKD

TITLE	DRAWING NUMBER	REV.
INSULATION, POLYSTYRENE FOAM BATTERY BOX	19046	1
		SHT. 1/7

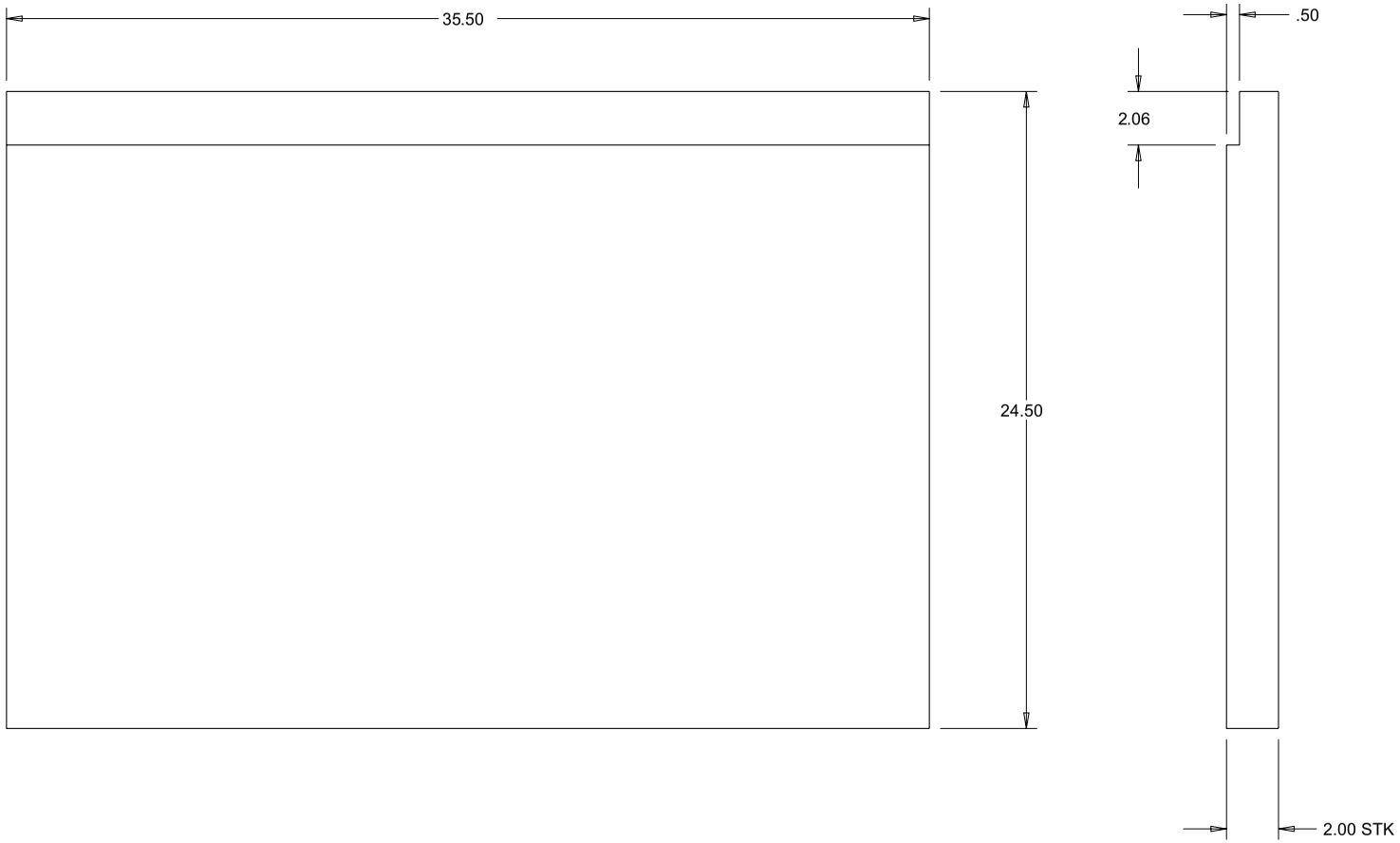

19046-01

SCALE 0.150

MATERIAL	SCALE										
POLYSTYRENE FOAM, 2" THK	AS SHOWN	UNLESS OTHERWISE SPECIFIED DIMENSIONS ARE IN INCHES	XX ± 0.03 XXX ± 0.01	ANGLES ± 0.5° OTHER _____	Natural Resources Canada				DWG SIZE	1	PROTOTYPE, RELEASE, REF ECN 2731	30 AUG 2013	CCB
					DWN CCB	DATE DWN 30 AUG 2013	CHKD	DATE	A1	REV	DESCRIPTION	DATE	CHKD

TITLE	DRAWING NUMBER	REV.
INSULATION, POLYSTYRENE FOAM BATTERY BOX	19046	1
		SHT. 2/7

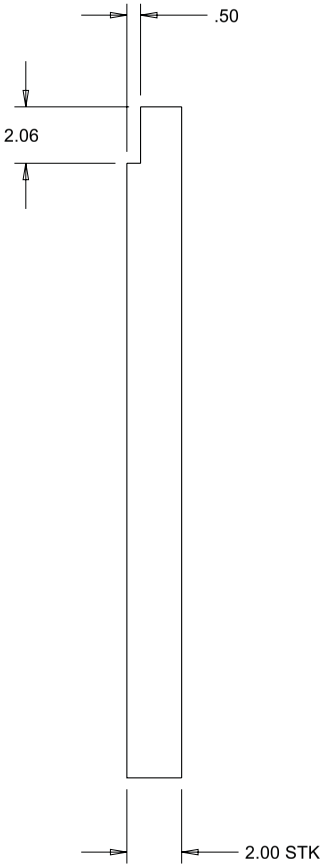

19046-02

SCALE 0.150

MATERIAL	SCALE										
POLYSTYRENE FOAM, 2" THK	AS SHOWN	UNLESS OTHERWISE SPECIFIED DIMENSIONS ARE IN INCHES	XX ± 0.03 XXX ± 0.01	ANGLES ± 0.5° OTHER _____	Natural Resources Canada				DWG SIZE	1	PROTOTYPE, RELEASE, REF ECN 2731	30 AUG 2013	CCB
					DWN CCB	DATE DWN 30 AUG 2013	CHKD	DATE	A1	REV	DESCRIPTION	DATE	CHKD

TITLE	DRAWING NUMBER	REV.
INSULATION, POLYSTYRENE FOAM BATTERY BOX	19046	1
		SHT. 3/7

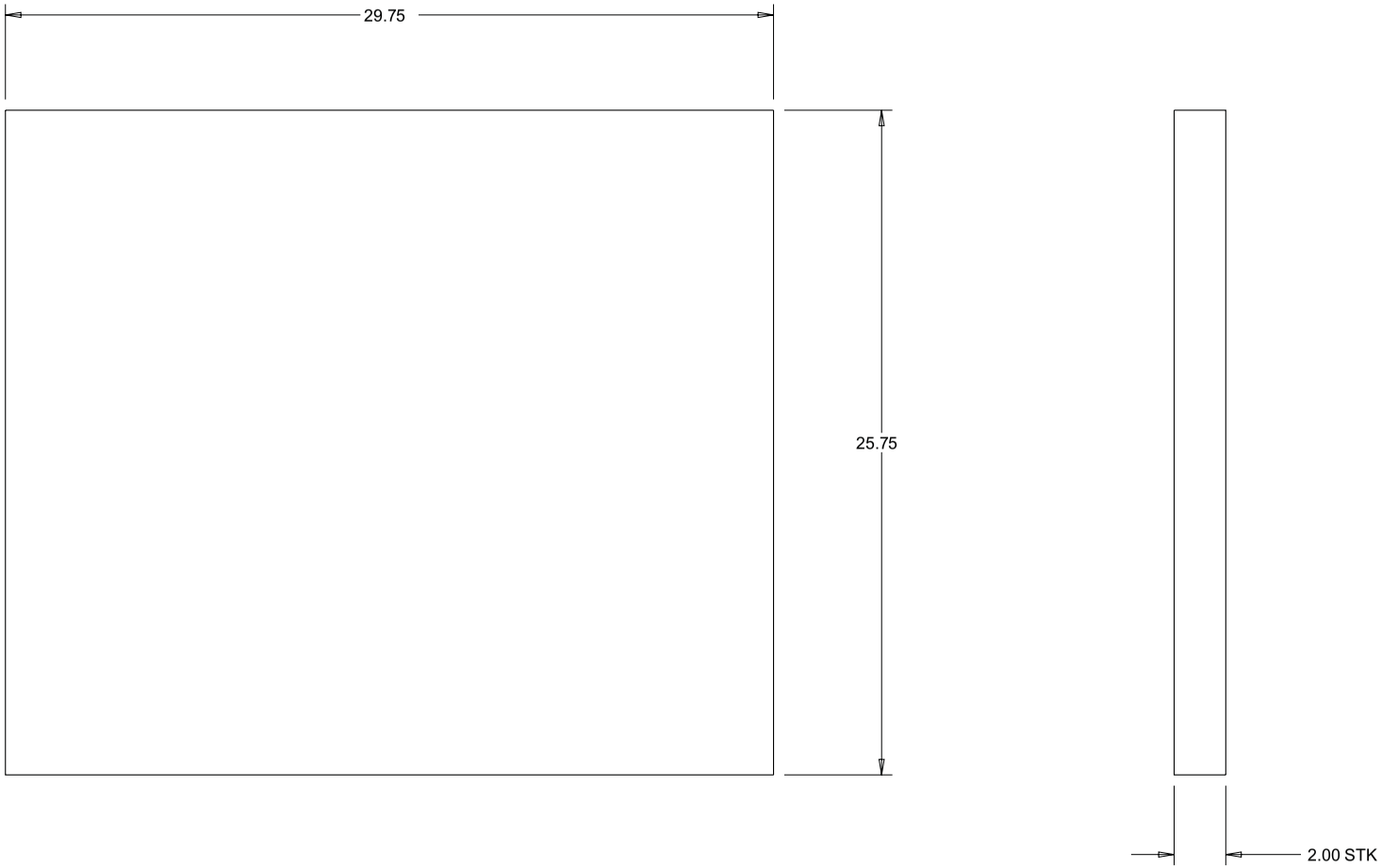

19046-03

SCALE 0.150

MATERIAL	SCALE											
POLYSTYRENE FOAM, 2" THK	AS SHOWN	UNLESS OTHERWISE SPECIFIED DIMENSIONS ARE IN INCHES	XX ± 0.03 XXX ± 0.01	ANGLES ± 0.5° OTHER _____	Natural Resources Canada				DWG SIZE	1	PROTOTYPE, RELEASE, REF ECN 2731	30 AUG 2013	CCB
					DWN CCB	DATE DWN 30 AUG 2013	CHKD	DATE	A1	REV	DESCRIPTION	DATE	CHKD

TITLE	DRAWING NUMBER	REV.
INSULATION, POLYSTYRENE FOAM BATTERY BOX	19046	1
		SHT. 4/7

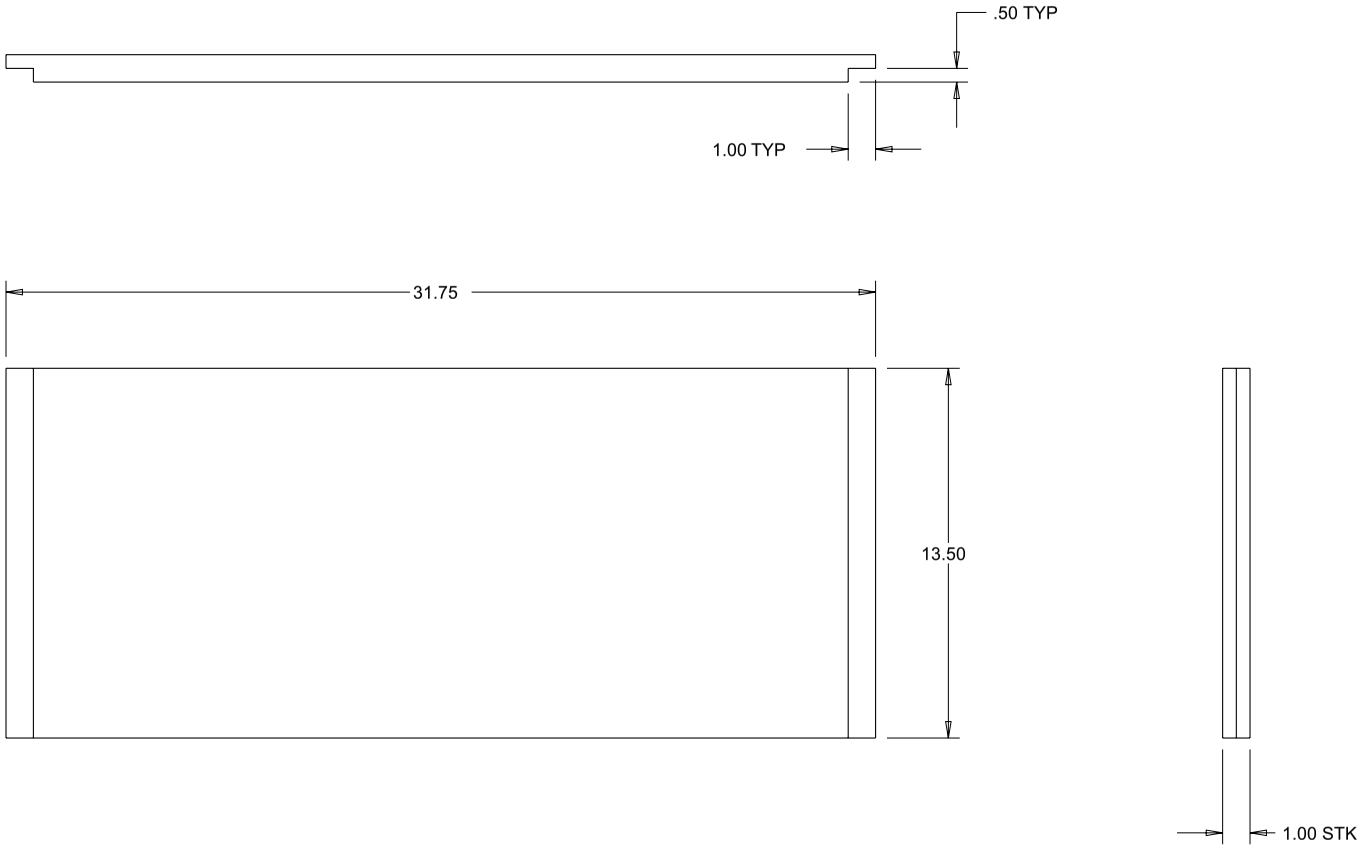

19046-04

SCALE 0.150

MATERIAL	SCALE											
POLYSTYRENE FOAM, 1" THK	AS SHOWN	UNLESS OTHERWISE SPECIFIED DIMENSIONS ARE IN INCHES	XX ± 0.03 XXX ± 0.01	ANGLES ± 0.5° OTHER _____	Natural Resources Canada				DWG SIZE	1	PROTOTYPE, RELEASE, REF ECN 2731	30 AUG 2013	CCB
					DWN CCB	DATE DWN 30 AUG 2013	CHKD	DATE	A1	REV	DESCRIPTION	DATE	CHKD

TITLE	DRAWING NUMBER	REV.
INSULATION, POLYSTYRENE FOAM BATTERY BOX	19046	1
		SHT. 5/7

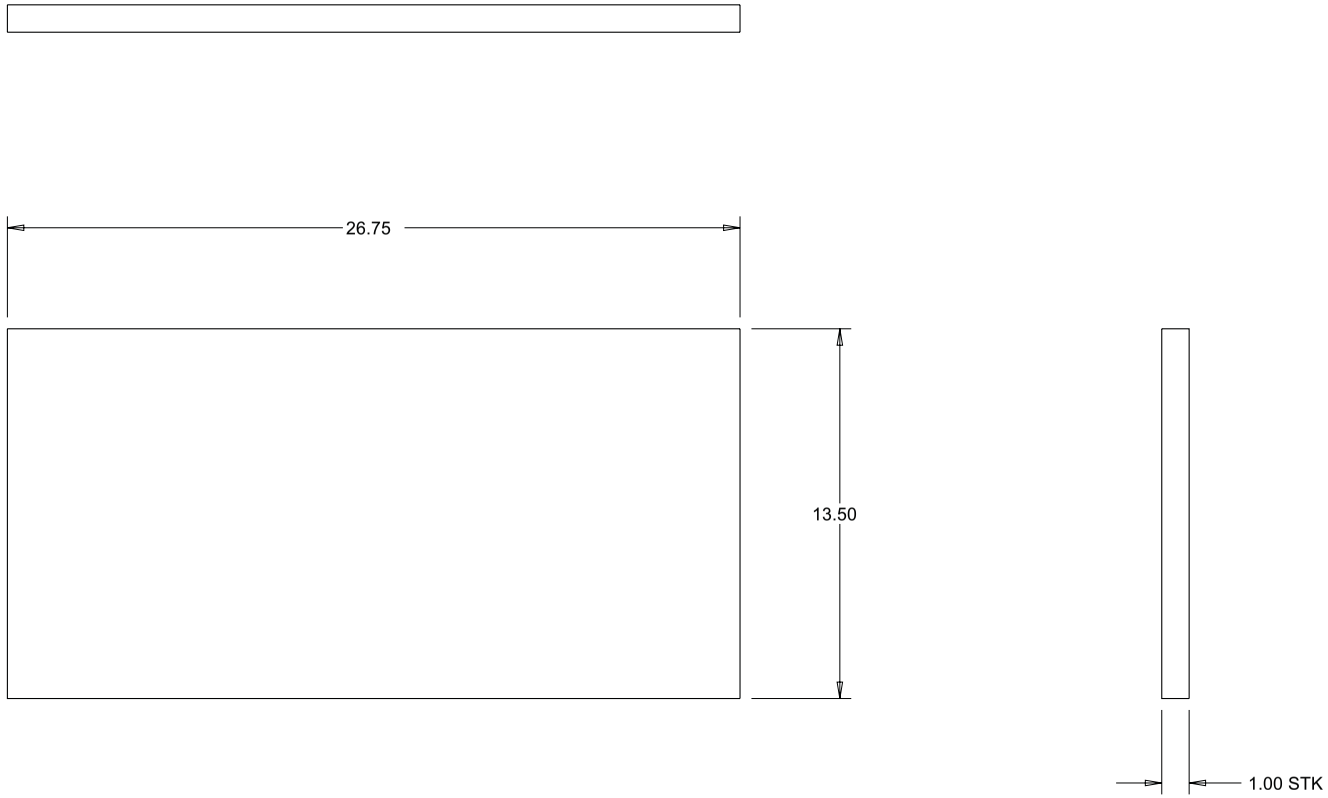

19046-05

SCALE 0.150

MATERIAL	SCALE											
POLYSTYRENE FOAM, 1" THK	AS SHOWN	UNLESS OTHERWISE SPECIFIED DIMENSIONS ARE IN INCHES	XX ± 0.03 XXX ± 0.01	ANGLES ± 0.5° OTHER _____	Natural Resources Canada				DWG SIZE	1	PROTOTYPE, RELEASE, REF ECN 2731	30 AUG 2013	CCB
					DWN CCB	DATE DWN 30 AUG 2013	CHKD	DATE	A1	REV	DESCRIPTION	DATE	CHKD

TITLE	DRAWING NUMBER	REV.
INSULATION, POLYSTYRENE FOAM BATTERY BOX	19046	1
		SHT. 6/7

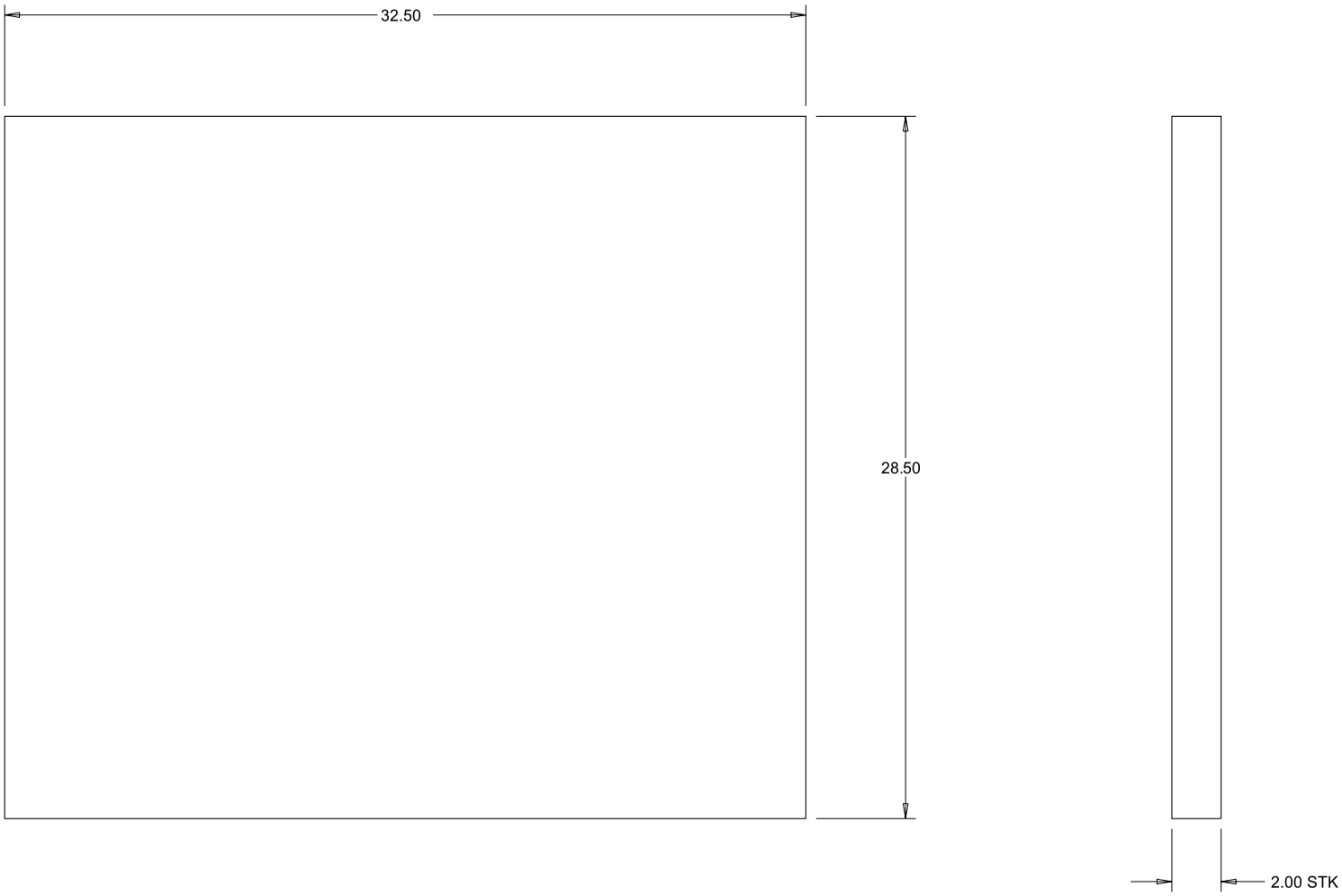

19046-06

SCALE 0.150

MATERIAL	SCALE											
POLYSTYRENE FOAM, 2" THK	AS SHOWN	UNLESS OTHERWISE SPECIFIED DIMENSIONS ARE IN INCHES	XX ± 0.03 XXX ± 0.01	ANGLES ± 0.5° OTHER _____	Natural Resources Canada				DWG SIZE	1	PROTOTYPE, RELEASE, REF ECN 2731	30 AUG 2013	CCB
					DWN CCB	DATE DWN 30 AUG 2013	CHKD	DATE	A1	REV	DESCRIPTION	DATE	CHKD

TITLE	DRAWING NUMBER	REV.
INSULATION, POLYSTYRENE FOAM BATTERY BOX	19046	1
		SHT. 7/7

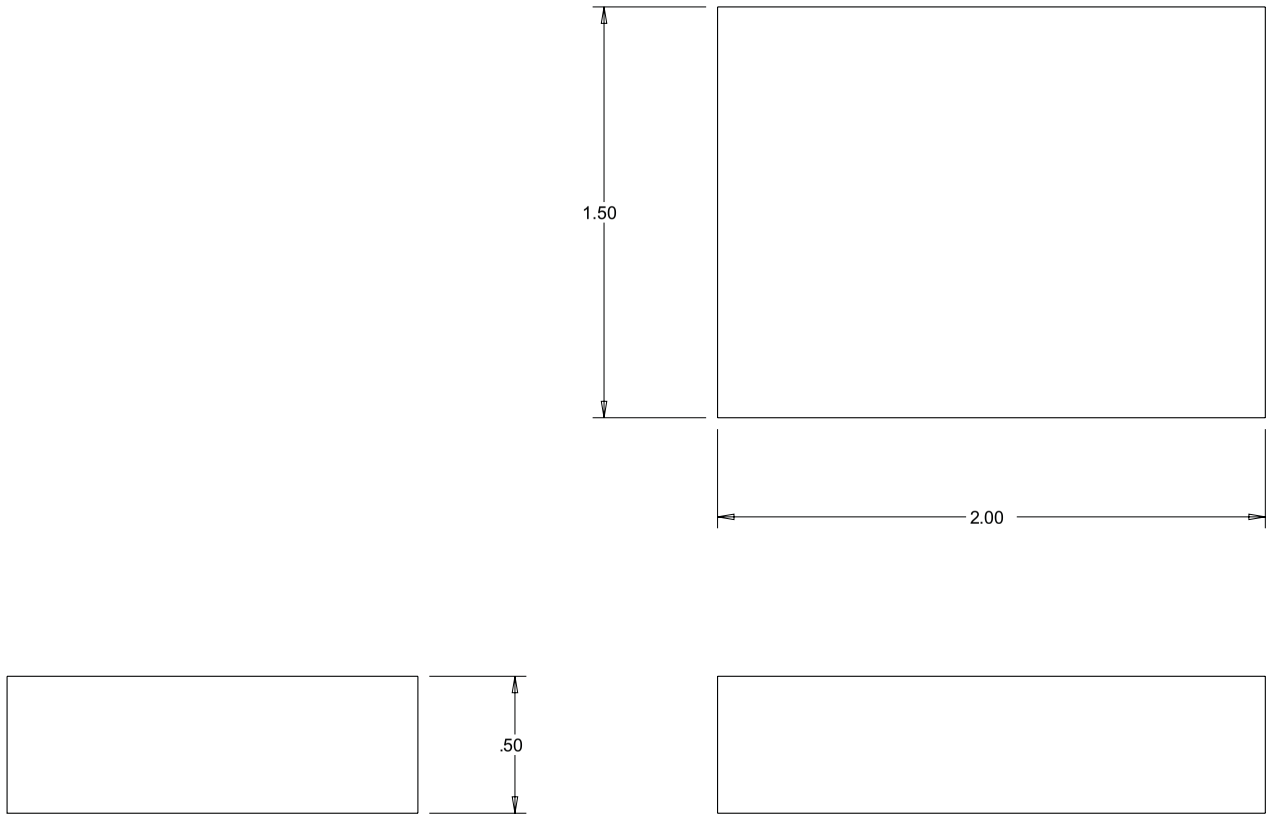

19046-07

MATERIAL	SCALE										
POLYSTYRENE FOAM, 2" THK	AS SHOWN	UNLESS OTHERWISE SPECIFIED DIMENSIONS ARE IN INCHES	XX ± 0.03 XXX ± 0.01	ANGLES ± 0.5° OTHER _____	Natural Resources Canada				DWG SIZE	1	PROTOTYPE, RELEASE, REF ECN 2731	30 AUG 2013	CCB
					DWN CCB	DATE DWN 30 AUG 2013	CHKD	DATE	A1	REV	DESCRIPTION	DATE	CHKD

TITLE	DRAWING NUMBER	REV.
PLYWOOD, BATTERY BOX	19047	1
		SHT. 1/2

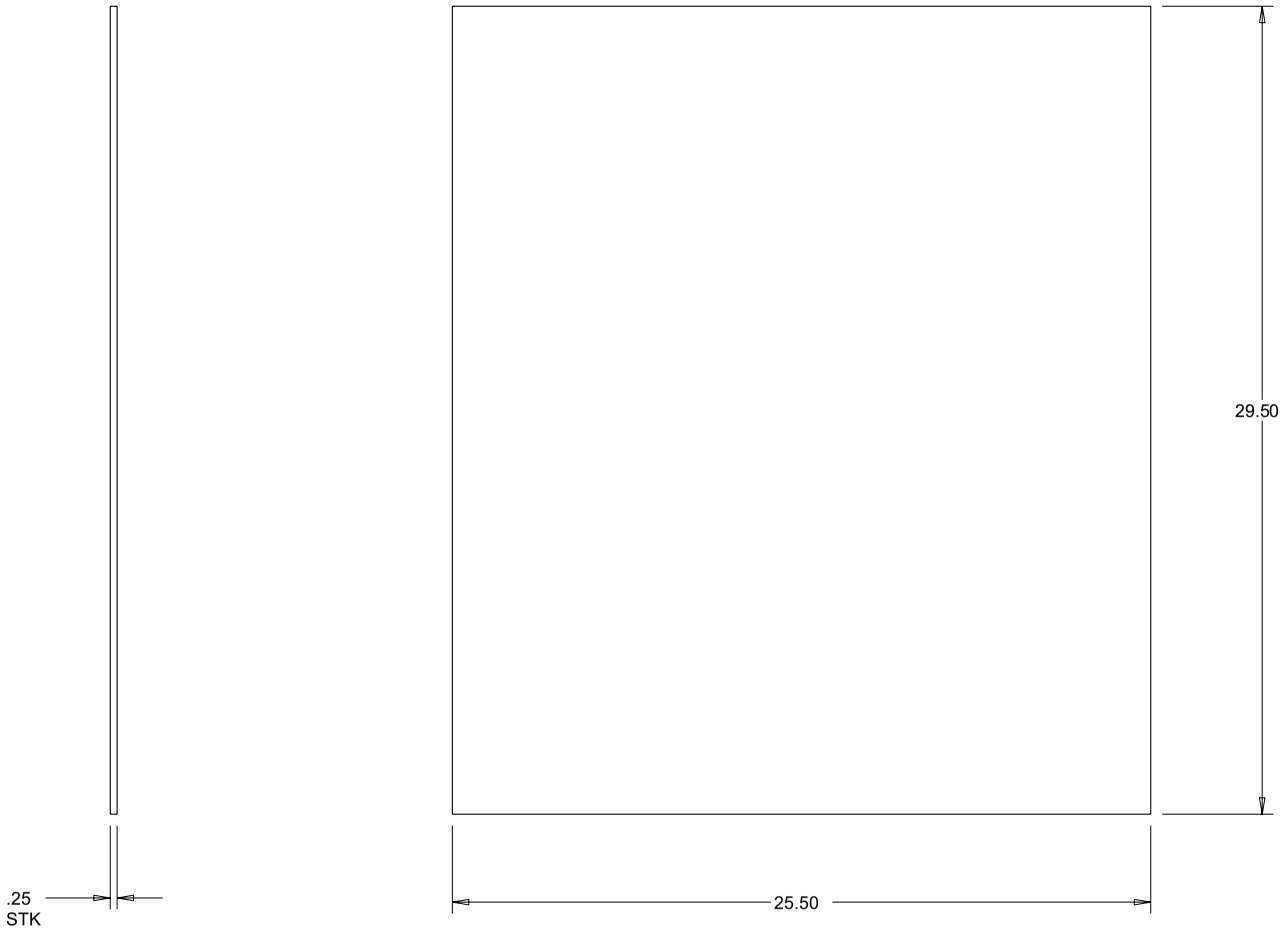

19047-01

SCALE 0.150

MATERIAL	SCALE				Natural Resources Canada				DWG SIZE	1	PROTOTYPE RELEASE, REF ECN 2731	29 AUG 2013	CCB
1/4" PLYWOOD	AS SHOWN	UNLESS OTHERWISE SPECIFIED DIMENSIONS ARE IN INCHES	XX ± 0.03 XXX ± 0.01	ANGLES ± 0.5° OTHER _____	DWN CCB	DATE DWN 29 AUG 2013	CHKD	DATE	A1	REV	DESCRIPTION	DATE	CHKD

TITLE	DRAWING NUMBER	REV. 1
PLYWOOD, BATTERY BOX	19047	SHT. 2/2

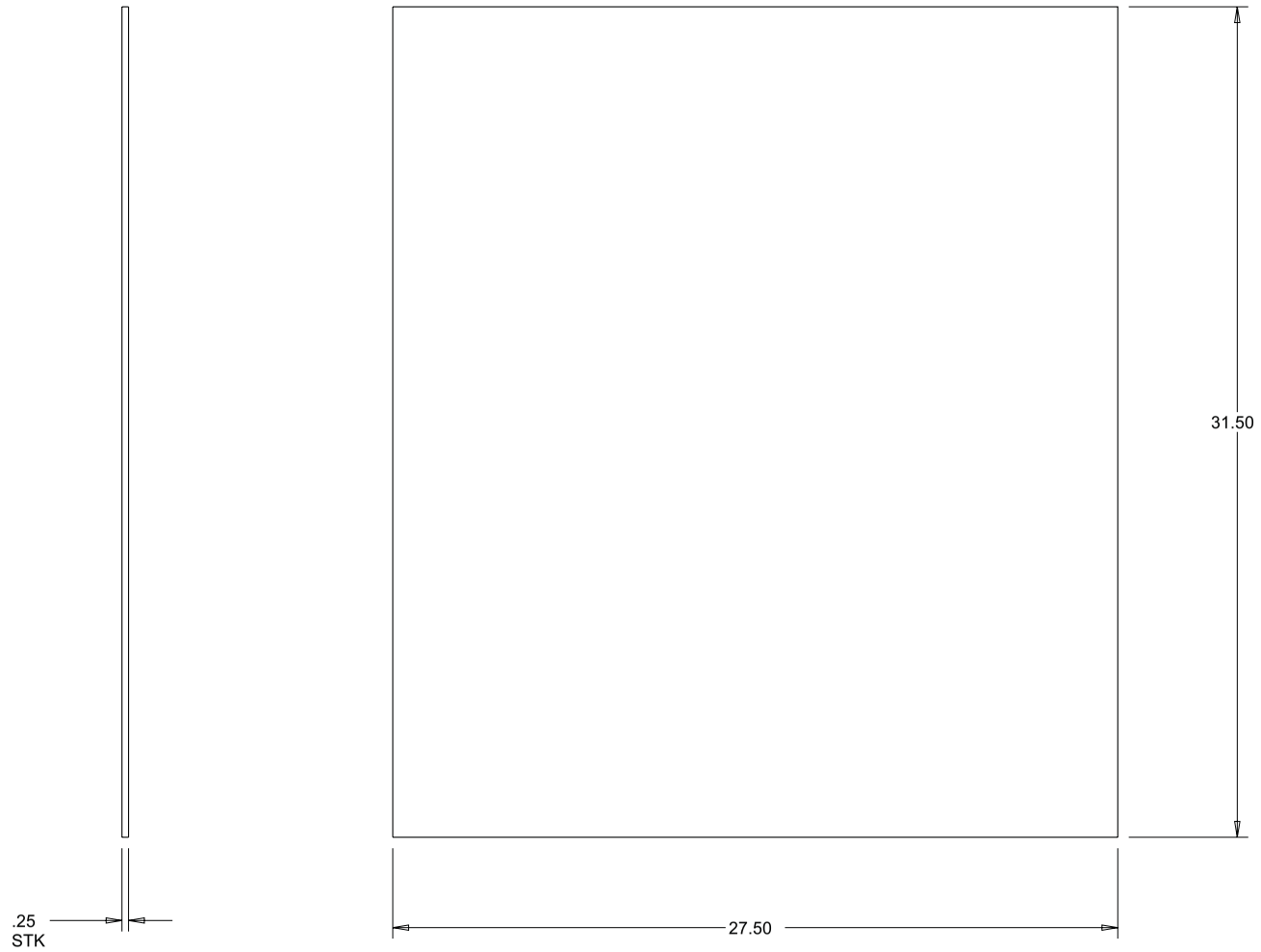

SCALE 0.150

19047-02

MATERIAL	SCALE											
1/4" PLYWOOD	AS SHOWN	UNLESS OTHERWISE SPECIFIED DIMENSIONS ARE IN INCHES	XX ± 0.03 XXX ± 0.01	ANGLES ± 0.5° OTHER _____	Natural Resources Canada				DWG SIZE A1	1	PROTOTYPE RELEASE, REF ECN 2731	29 AUG 2013	CCB
					DWN CCB	DATE DWN 29 AUG 2013	CHKD	DATE		REV	DESCRIPTION	DATE	CHKD

TITLE	DRAWING NUMBER	REV.
SOLAR PANEL STRUCTURE, ASSY	19048	3
		SHT. 1/2

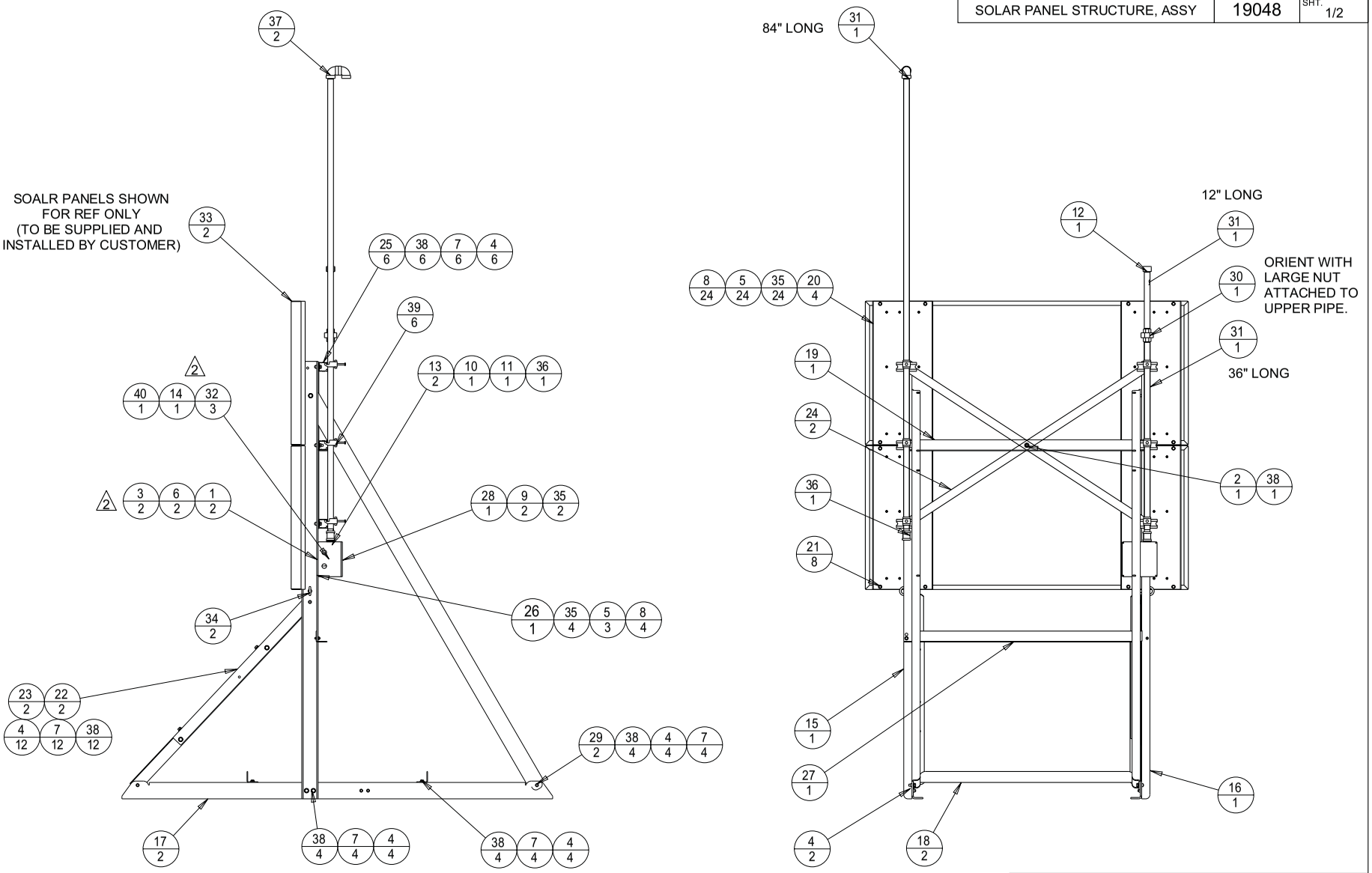

REV	DESCRIPTION	DATE	CHKD
3	PICTORIALLY UPDATED TO REFLECT PC PART CHANGES ELBOW AND CAP ADDED TO ENDS OF PIPES AT TOP MNTG HDW CHANGED TO YELLOW ZN CHROMATE, REF ECN 2731	30 AUG 2013	CCB
2	TERMINAL BLOCK AND MNTG HDW ADDED REF ECN 2731	4 JUL 2013	CCB
1	PROTOTYPE RELEASE, REF ECN 2731	20 JUNE 2013	CCB

MATERIAL
SEE INDIVIDUAL LPART DRAWINGS

SCALE
AS SHOWN

UNLESS OTHERWISE SPECIFIED DIMENSIONS ARE IN INCHES
XX ± 0.03
XXX ± 0.01
ANGLES ± 0.5°
OTHER _____

Natural Resources Canada

DWN	DATE DWN	CHKD	DATE
CCB	20 JUN 2013		

DWG SIZE
A1

TITLE	DRAWING NUMBER	REV.
SOLAR PANEL STRUCTURE, ASSY	19048	3
		SHT. 2/2

INDEX	PART#	DESCRIPTION	QTY	
1	9000-1058	SCR MACH #10-32*.75"L P/PH SST	2	
2	9001-1002ALTERNATE	NUT 3/8-16 NYLOK HEX STL YELLOW ZN CHROMATE PLD .56"AF	1	3
3	9001-1022	NUT #10-32 NYLOK HEX SST	2	
4	9002-0004ALTERNATE	WSHR 3/8" FLAT SAE .81"OD STL YELLOW ZN CHROMATE PLD	32	2 3
5	9002-0012ALTERNATE	WSHR 1/4" FLAT SAE STL YELLOW ZN CHROMATE PLD	27	3
6	9002-0040	WSHR #10 FLAT SST 18-8	2	2
7	9002-1001_ALTERNATE	LOCK WASHER, 3/8, YELLOW ZN CHROMATE	30	3
8	9002-1005ALTERNATE	WSHR 1/4" LOCK REG STL YELLOW ZN CHROMATE PLD	28	3
9	9002-4005	WSHR 1/4" SEALING STL/RBR	2	2
10	9019-0029	NUT, LOCK, ELEC CONDUIT 0.75 INCH	1	
11	9019-1018	WSHR, SEALING RING 3/4"DIA METAL LIQ-TIT	1	
12	9045-0124ALTERNATE	CAP, PIPE, 3/4"NPT SCH 40 GALV IRON	1	3
13	9045-0230	NIPPLE 3/4"NPT*CLOSE SCH 40 BLK PIPE	2	
14	19035	DIN RAIL, JB BOX	1	3
15	19049	VERICAL POST, W/PEMS	1	
16	19050	VERTICAL POST W/PEMS & SLOT	1	
17	19051	BASE CHANNEL W/PEMS	2	
18	19052	BATTERY BOX SUPPORT ANGLE	2	
19	19053	BRACE SOLAR PANEL	1	
20	19054	MNTG PLATE, SOALR PANEL W/PEMS	4	
21	19055	NUT BAR, 8.25C/C, 1/4UNC	8	
22	19056-01	BRACE, 2.0"X2.0"X.125"THK, AL	2	
23	19056-02	BRACE, 2.0"X2.0"X.125"THK, AL W/PEMS	2	
24	19057	CROSS BRACE, 1.5" W X .125" THK, AL	2	
25	19058	ANTENNA MNT	6	
26	19059	BRKT, JB	1	
27	19060	LOCKING BAR, NRCAN	1	
28	19061	JB BOX, MODIFIED W/HOLES	1	
29	19062	LONG BRACE, SOLAR PANEL SUPORT CHANNEL	2	
30	34NPT_UNION_GALV	UNION, 3/4" NPT, SCH 40, GALV	1	
31	34PIPE	PIPE, 3/4", SCH40, GALV	3	132", SEE DRAWING FOR BREAKDOWN OF LENGTHS.
32	ERICO_569010	DISTRIBUTION TERMINAL BLOCK, IN #4-16 AWG,OUT 4#8-16 & 2#4-16	3	SOLAR PANELS NOT SUPPLIED, SHOWN FOR REFERENCE ONLY
33	KYOCERA_KD135GX_LPU	SOLAR PANEL	2	
34	MCMASTER_CARR_3014T471	EYE BOLT, 1" ID, 3/8 UNC THREAD	2	
35	MCMASTER_CARR_92620A540	SCR HHC 1/4-20*.75"L GR 8 STL YELLOW ZN CHROMATE PLD	30	2 3
36	MCMASTER_CARR4638K115	CPLG, 3/4 "NPT GALV IRON PIPE SCH 40	2	3
37	MCMASTER_CARR4638K134	ELBOW, 90 DEG 3/4"NPT SCH 40, GALV IRON	2	3
38	MCMASTER_CARR92620A624	SCR HHC 3/8-16*1"L GR 8 STL YEL ZN CHROMATE PLD	31	3
39	UNISTRUT_MU075	PIPE CLAMP	6	
40	WEIDMUL_WDK_2_5N_PE__1041620000	TERMINAL BLOCK, DBL TIER, 4 TERM, 26 TO 12AWG, DIN RAIL MNT	1	3

REV	DESCRIPTION	DATE	CHKD
3	ELBOW AND CAP ADDED TO ENDS OF PIPES AT TOP MNTG HDW CHANGED TO YEL ZN CHROMATE, LIQ TITE CONDUIT & FITTINGS REMOVED, DBL TERM BLOCK ADDED, 3/4"CPLG QTY 2 WAS 1, DIN RAIL 19035 WAS 16416-1, ECN 2731	30 AUG 2013	CCB
2	TERMINAL BLOCK AND MNTG HDW ADDED REF ECN 2731	04 JUL 2013	CCB
1	PROTOTYPE RELEASE, REF ECN 2731	20 JUN 2013	CCB

MATERIAL: AS SHOWN

SCALE: AS SHOWN

UNLESS OTHERWISE SPECIFIED DIMENSIONS ARE IN INCHES

XX ± 0.03
XXX ± 0.01

ANGLES ± 0.5°
OTHER _____

Natural Resources Canada

DWN	DATE DWN	CHKD	DATE
CCB	20 JUN 2013		

DWG SIZE: A1

INDEX	PART#	DESCRIPTION	QTY
1	9001-5042	NUT 1/4-20 SELF-CLINCH SST	1
2	9001-5049	NUT 3/8-16 SELF CLINCH STL ZN PLD(.120)	5
3	19049-21	VERTICAL POST	1

TITLE	DRAWING NUMBER	REV.
VERTICAL POST, W/PEMS	19049	A
		SHT. 1/2

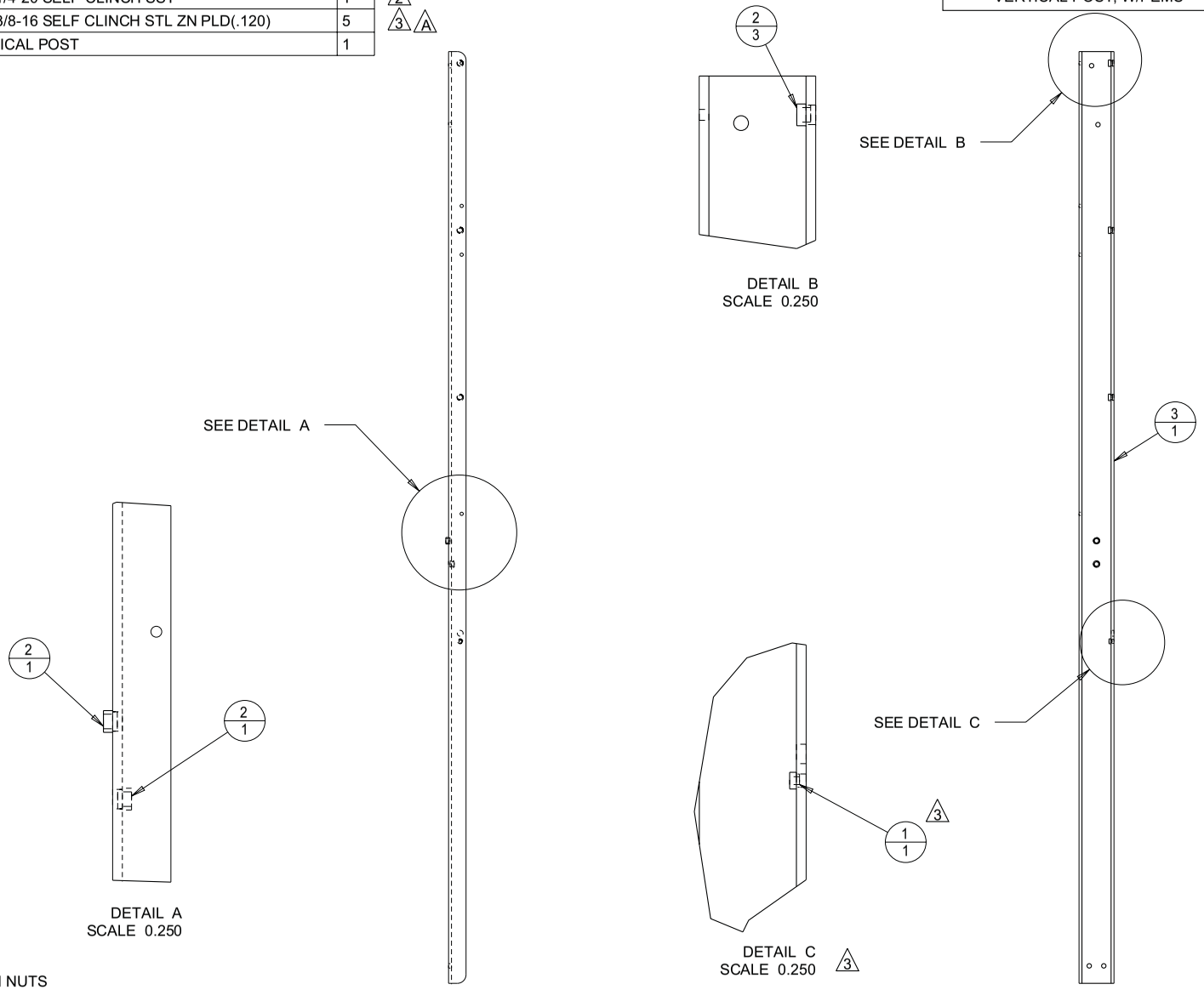

NOTE: INSERT 1/4" PEM NUTS
INTO .390 SIZE HOLES AND 3/8"
PEM NUTS INTO .501 SIZE HOLES.

REV	DESCRIPTION	DATE	CHKD
A	9001-5049 WAS -5039. ECN 2753.	18OCT2013	GCH
3	QTY 1 - 1/4-20 PEM NUT ADDED DETAIL 'C' ADDED, REF ECN 2731	28 AUG 13	CCB
2	1/4-20 PEM NUT REMOVED, REF ECN 2731	4 JUL 2013	CCB
1	PROTOTYPE RELEASE. ECN 2731.	25JUNE2013	GCH

MATERIAL	SCALE							DWG SIZE
AS SHOWN	AS SHOWN	UNLESS OTHERWISE SPECIFIED DIMENSIONS ARE IN INCHES	XX ± 0.03 XXX ± 0.01	ANGLES ± 0.5° OTHER _____	Natural Resources Canada			A1
					DWN GCH	DATE DWN 25JUNE2013	CHKD	DATE

TITLE	DRAWING NUMBER	REV.
VERTICAL POST, W/PEMS	19049	A
		SHT. 2/2

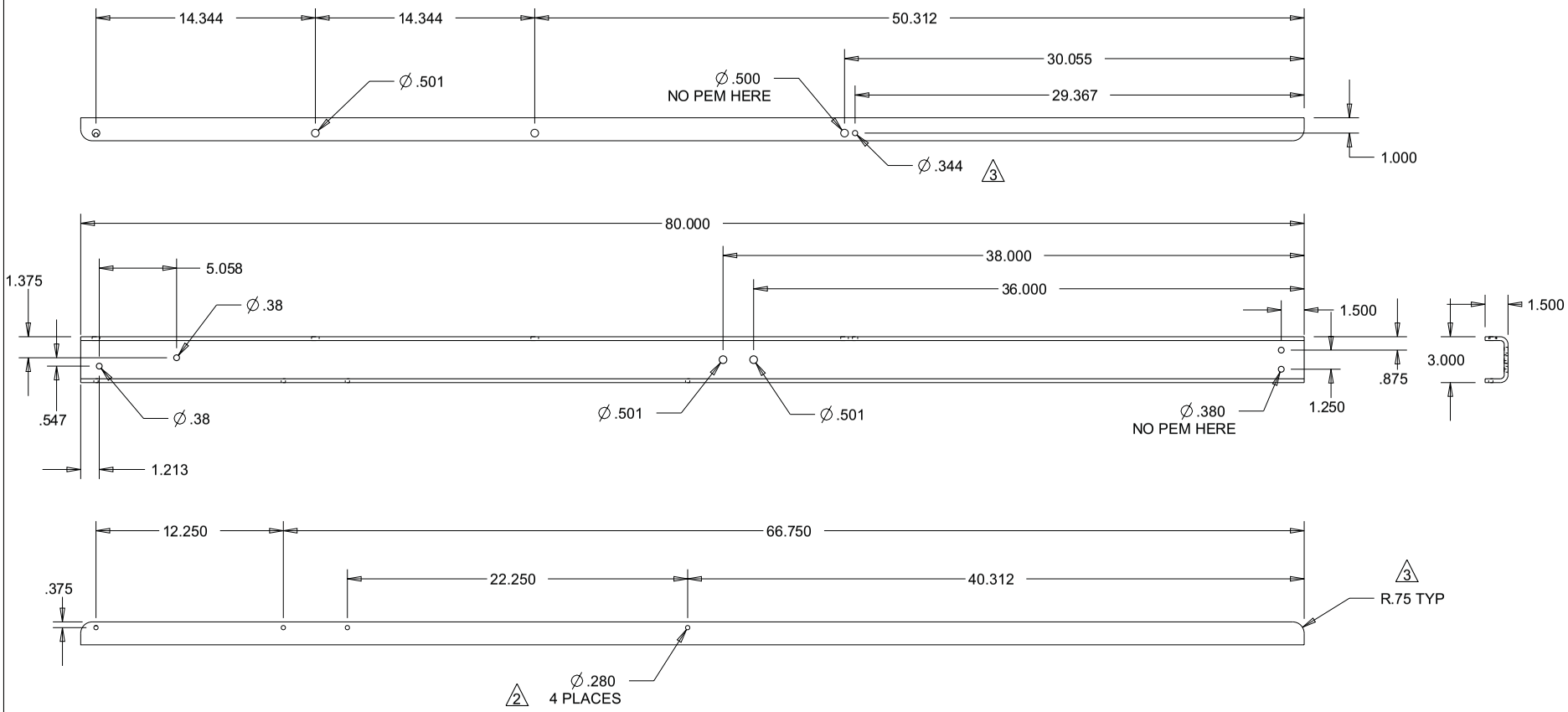

19049-21

SCALE 0.100

REV	DESCRIPTION	DATE	CHKD
A	.38 DIA HOLES READ .501, NON-ECN	22 OCT 2013	CCB
A	9001-5049 WAS -5039. ECN 2753.	18OCT2013	GCH
3	.344 DIA HOLE WAS .38, NO PEM NOTE RMOVED FROM THIS LOCATION, RAD ADDED TO ALL CORNERS, REF ECN 2731	28 AUG 13	CCB
2	.280 DIA QTY 4 HOLES WAS .390 DIA "UNLESS SPECIFIED" REMOVED REF ECN 2731	4 JUL 2013	CCB
1	PROTOTYPE RELEASE. ECN 2731.	25JUNE2013	GCH

MATERIAL
ALUMINIUM 5052-H32, 1/4" THICK

SCALE
AS SHOWN

UNLESS OTHERWISE SPECIFIED DIMENSIONS ARE IN INCHES
XX ± 0.03
XXX ± 0.01
ANGLES ± 0.5°
OTHER _____

Natural Resources Canada

DWN	DATE DWN	CHKD	DATE
GCH	25JUNE2013		

DWG SIZE
A1

INDEX	PART#	DESCRIPTION	QTY
1	9001-5042	NUT 1/4-20 SELF-CLINCH SST	1
2	9001-5049	NUT 3/8-16 SELF CLINCH STL ZN PLD(.120)	5
3	19050-21	VERTICAL POST W/SLOT	1

TITLE	DRAWING NUMBER	REV.
VERTICAL POST W/PEMS & SLOT	19050	A
		SHT. 1/2

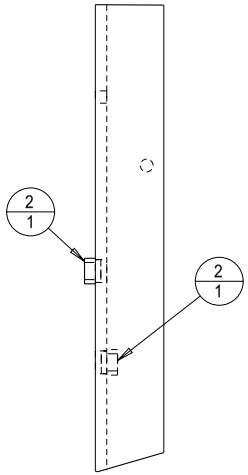

DETAIL A
SCALE 0.250

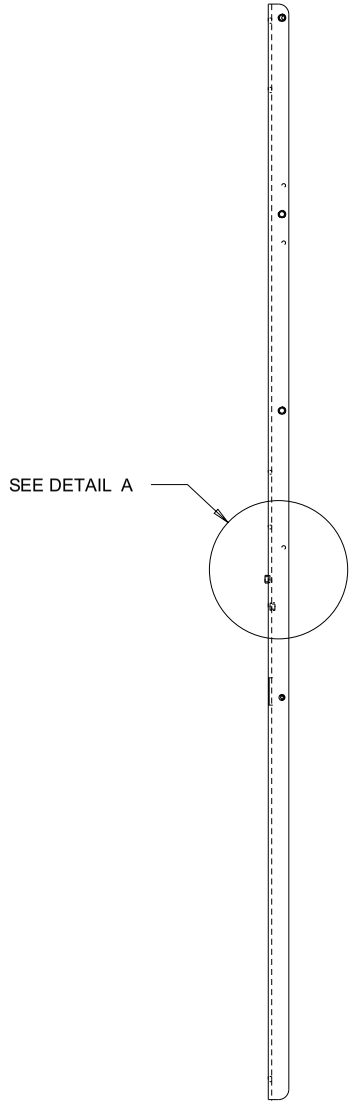

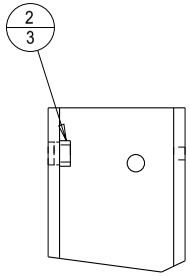

DETAIL B
SCALE 0.250

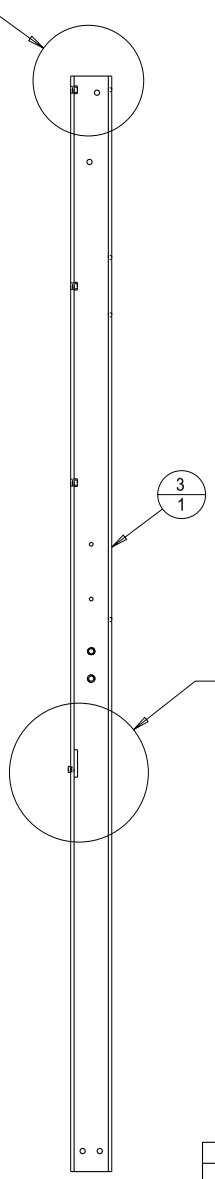

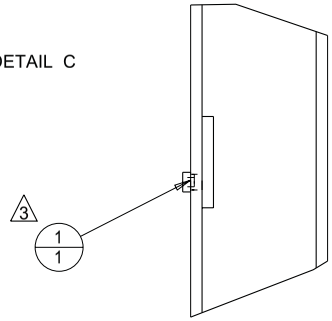

3 DETAIL C
SCALE 0.250

NOTE: INSERT 1/4" PEM NUTS
INTO .344 SIZE HOLES AND 3/8"
PEM NUTS INTO .501 SIZE HOLES.

REV	DESCRIPTION	DATE	CHKD
A	9001-5049 WAS -5039. ECN 2753.	21OCT2013	GCH
3	QTY 1 - 1/4-20 PEM NUT ADDED DETAIL 'C' ADDED, REF ECN 2731	29 AUG 2013	CCB
2	1/4-20 PEMS REMOVED, REF ECN 2731	4 JUL 2013	CCB
1	PROTOTYPE RELEASE. ECN 2731.	25JUNE2013	GCH

MATERIAL	SCALE							
AS SHOWN	AS SHOWN	UNLESS OTHERWISE SPECIFIED DIMENSIONS ARE IN INCHES	XX ± 0.03 XXX ± 0.01	ANGLES ± 0.5° OTHER _____	Natural Resources Canada			DWG SIZE
					DWN GCH	DATE DWN 25JUNE2013	CHKD	DATE	A1

TITLE	DRAWING NUMBER	REV.
VERTICAL POST W/PEMS & SLOT	19050	A
		SHT. 2/2

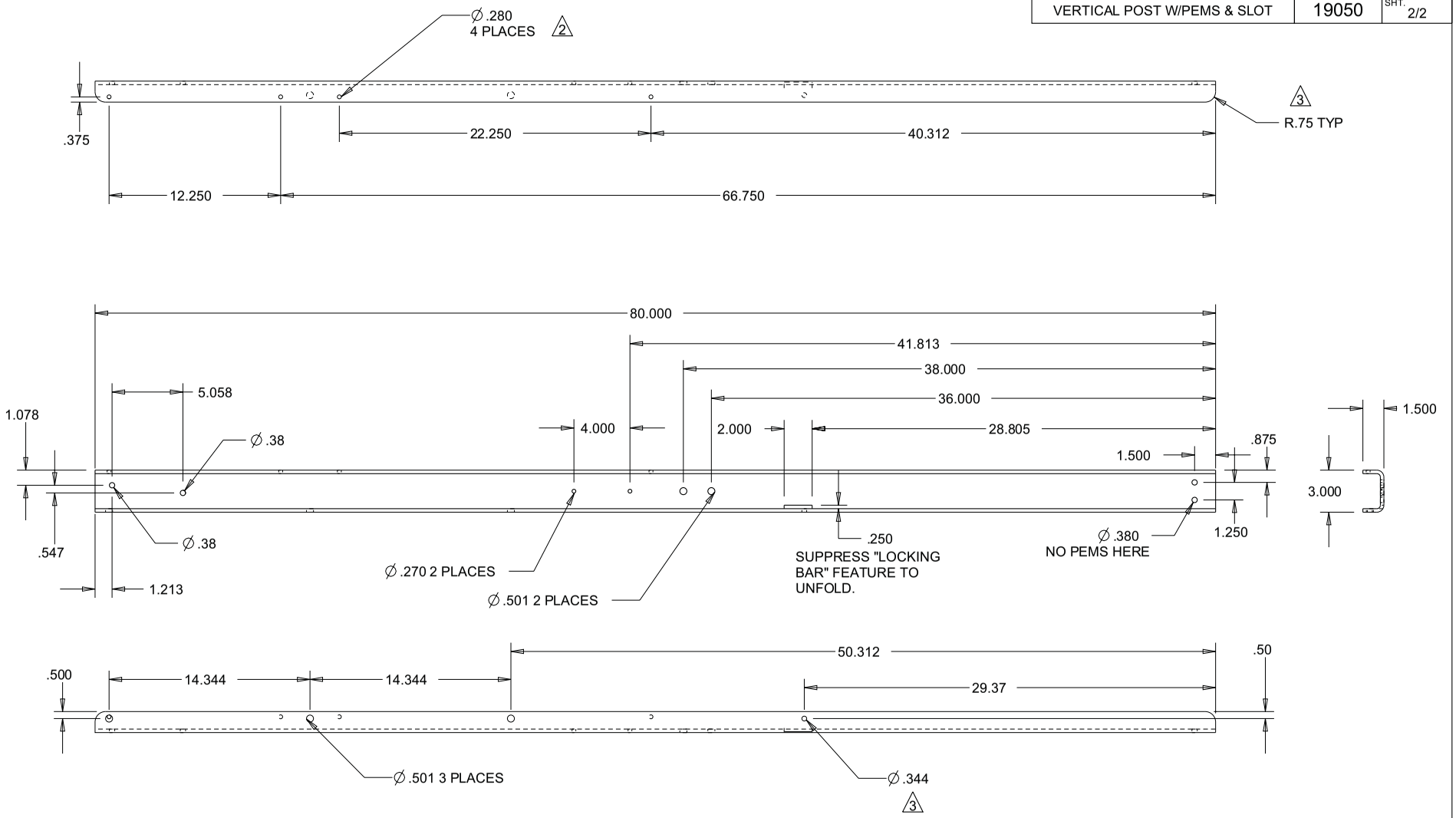

19050-21

REV	DESCRIPTION	DATE	CHKD
A	.38DIA HOLS READ .501, NON-ECN	22 OCT 2013	CCB
A	SEE SHT 1. ECN 2753.	21OCT2013	GCH
3	.344 DIA HOLE ADDED, RAD ADDED TO ALL CORNERS, REF ECN 2731	29 AUG 2013	CCB
2	.280 DIA QTY 4 HOLES WAS .390 DIA REF ECN 2731	4 JUL 2013	CCB
1	PROTOTYPE RELEASE. ECN 2731.	25JUNE2013	GCH

MATERIAL	SCALE				Natural Resources Canada				DWG SIZE
ALUMINIUM 5052-H32, 1/4" THICK	AS SHOWN	UNLESS OTHERWISE SPECIFIED DIMENSIONS ARE IN INCHES	XX ± 0.03 XXX ± 0.01	ANGLES ± 0.5° OTHER _____	DWN GCH	DATE DWN 25JUNE2013	CHKD	DATE	A1

INDEX	PART#	DESCRIPTION	QTY
1	9001-5049	NUT 3/8-16 SELF CLINCH STL ZN PLD(.120)	8
2	19051-21	BASE CHANNEL	1

A

TITLE	DRAWING NUMBER	REV.
BASE CHANNEL W/PEMS	19051	A
		SHT. 1/2

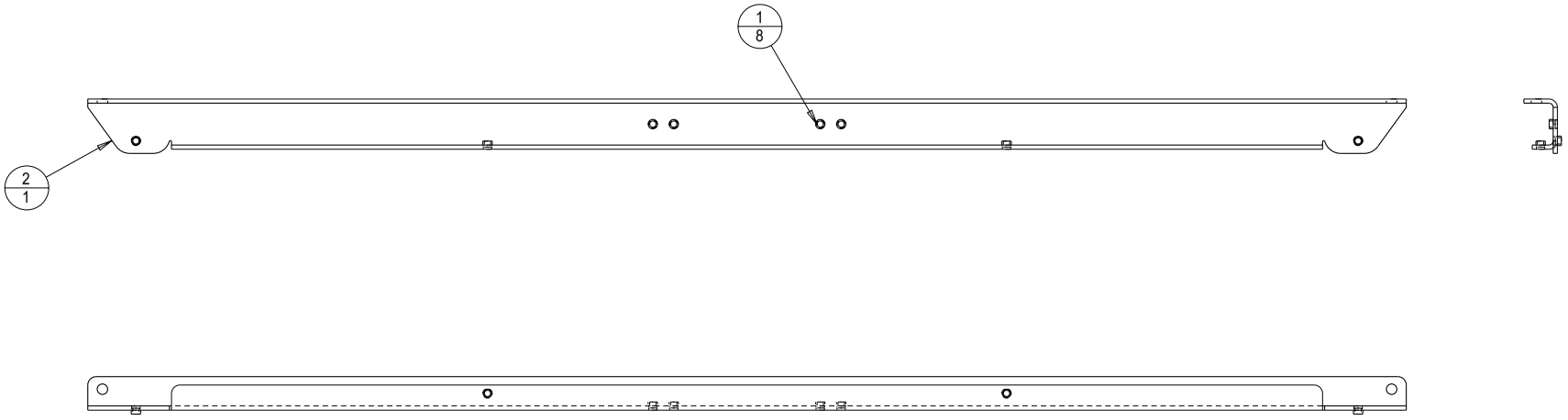

SCALE 0.100

MATERIAL	SCALE										
AS SHOWN	AS SHOWN	UNLESS OTHERWISE SPECIFIED DIMENSIONS ARE IN INCHES	XX ± 0.03 XXX ± 0.01	ANGLES ± 0.5° OTHER _____	Natural Resources Canada				DWG SIZE	A	9001-5049 WAS -5039. ECN 2753.	18OCT2013	GCH
					DWN GCH	DATE DWN 25JUNE2013	CHKD	DATE	A1	1	PROTOTYPE RELEASE. ECN 2731.	25JUNE2013	GCH
										REV	DESCRIPTION	DATE	CHKD

TITLE	DRAWING NUMBER	REV.
BASE CHANNEL W/PEMS	19051	A
		SHT. 2/2

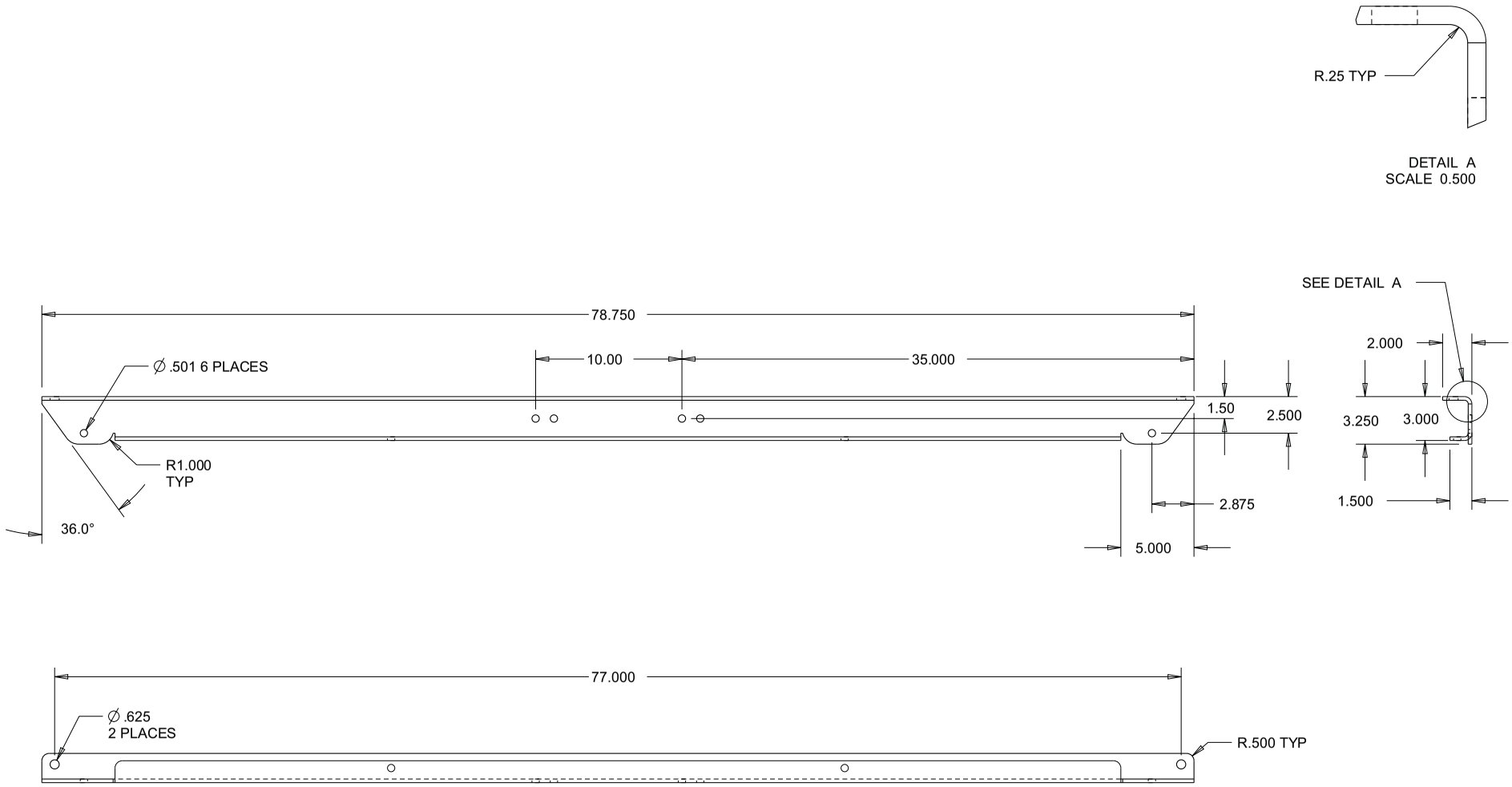

19051-21

MATERIAL	SCALE										
ALUMINIUM 5052-H32, 1/4" THICK	AS SHOWN	UNLESS OTHERWISE SPECIFIED DIMENSIONS ARE IN INCHES	XX ± 0.03 XXX ± 0.01	ANGLES ± 0.5° OTHER _____	Natural Resources Canada				DWG SIZE A1	A	SEE SHT 1, ECN 2753	18 OCT 2013	GCH
					DWN GCH	DATE DWN 25JUNE2013	CHKD	DATE		1	PROTOTYPE RELEASE. ECN 2731.	25JUNE2013	GCH
										REV	DESCRIPTION	DATE	CHKD

TITLE	DRAWING NUMBER	REV.
BATTERY SUPPORT ANGLE	19052	1
		SHT. 1/1

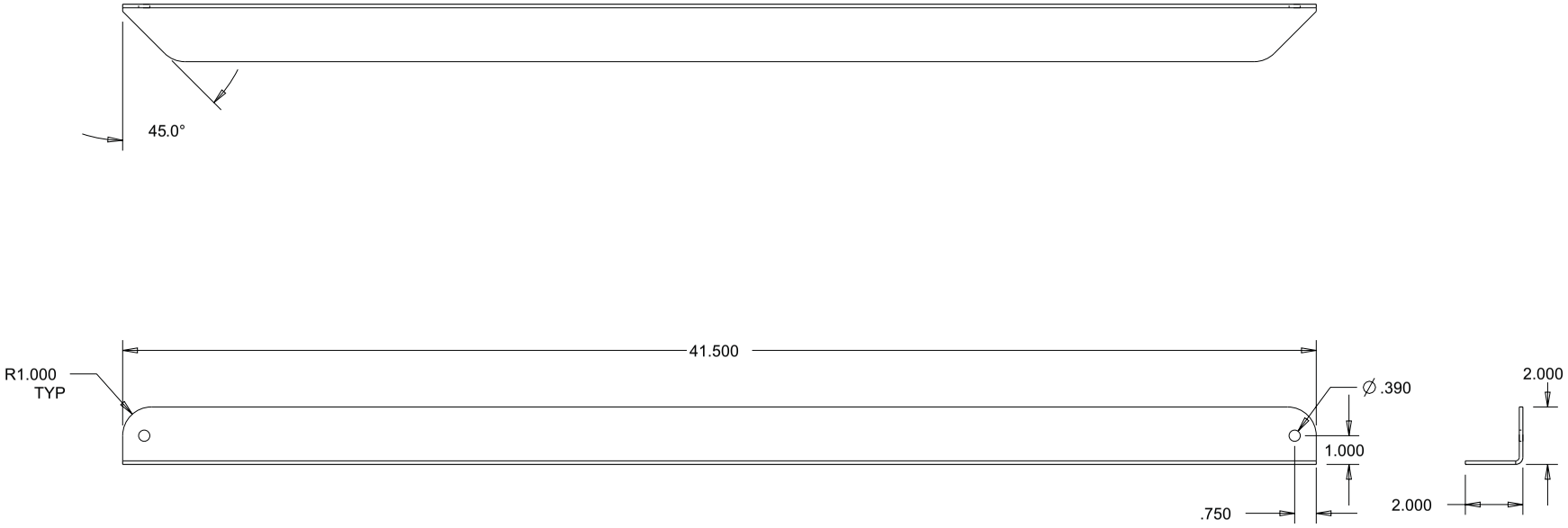

MATERIAL	SCALE									
ALUMINIUM 5052-H32, .125" THICK	AS SHOWN	UNLESS OTHERWISE SPECIFIED DIMENSIONS ARE IN INCHES	XX ± 0.03 XXX ± 0.01	ANGLES ± 0.5° OTHER _____	Natural Resources Canada				DWG SIZE	1	PROTOTYPE RELEASE. ECN 2731.	25JUNE2013	GCH
					DWN GCH	DATE DWN 25JUNE2013	CHKD	DATE	A1	REV	DESCRIPTION	DATE	CHKD

TITLE	DRAWING NUMBER	REV.
BRACE, SOLAR PANEL	19053	1
		SHT. 1/1

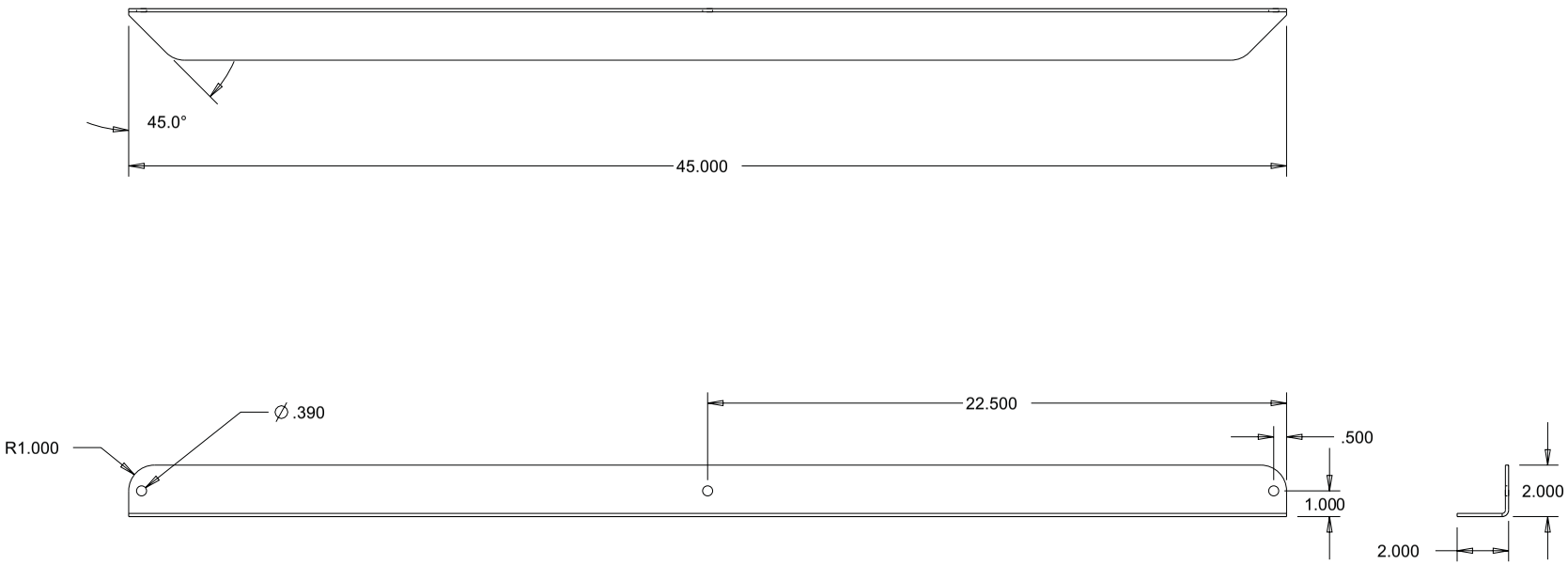

MATERIAL	SCALE										
ALUMINIUM 5052-H32, .125" THICK	AS SHOWN	UNLESS OTHERWISE SPECIFIED DIMENSIONS ARE IN INCHES	XX ± 0.03 XXX ± 0.01	ANGLES ± 0.5° OTHER _____	Natural Resources Canada				DWG SIZE	1	PROTOTYPE RELEASE. ECN 2731.	25JUNE2013	GCH
					DWN GCH	DATE DWN 25JUNE2013	CHKD	DATE	A1	REV	DESCRIPTION	DATE	CHKD

INDEX	PART#	DESCRIPTION	QTY
1	9001-5042	NUT 1/4-20 SELF-CLINCH SST	12
2	19054-21	SOLAR PANEL MNTG PLATE	1

TITLE	DRAWING NUMBER	REV.
MNTG PLATE, SOLAR PANEL W/PEMS	19054	3
		SHT. 1/2

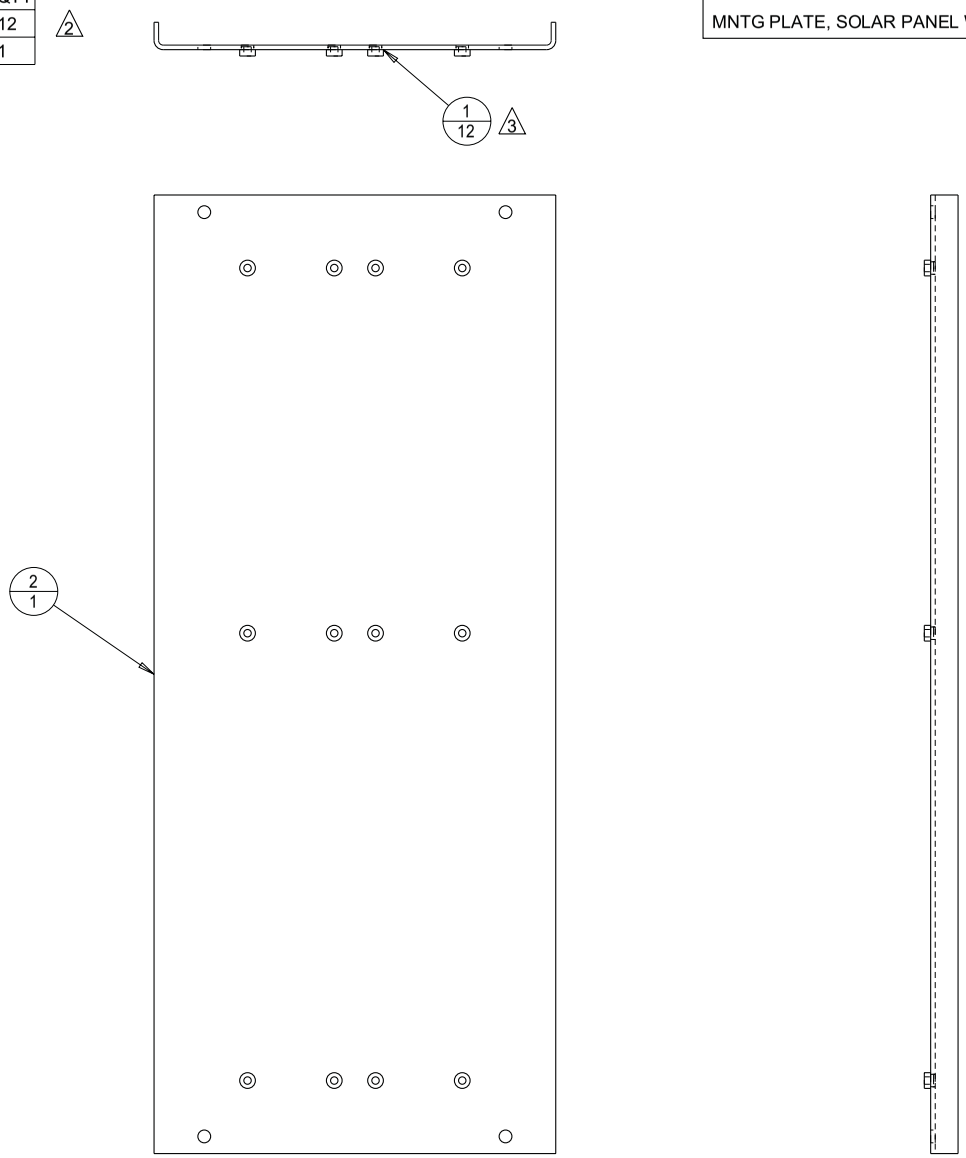

19054

SCALE 0.200

MATERIAL	SCALE										
SEE INDIVIDUAL PART DRAWING	AS SHOWN	UNLESS OTHERWISE SPECIFIED DIMENSIONS ARE IN INCHES	XX ± 0.03 XXX ± 0.01	ANGLES ± 0.5° OTHER _____	Natural Resources Canada				DWG SIZE	3	1/4-20 PEMS MOVED TO OTHER SIDE OF MNTG PLATE, REF ECN 2731	29 AUG 2013	CCB
					DWN CCB	DATE DWN 25JUNE2013	CHKD	DATE	A1	2	ASSY DWG CREATED TO SHOW 1/4-20 PEMS REF ECN 2731	4 JUL 2013	CCB
										REV	DESCRIPTION	DATE	CHKD

TITLE	DRAWING NUMBER	REV. 3
MNTG PLATE, SOLAR PANEL W/PEMS	19054	SHT. 2/2

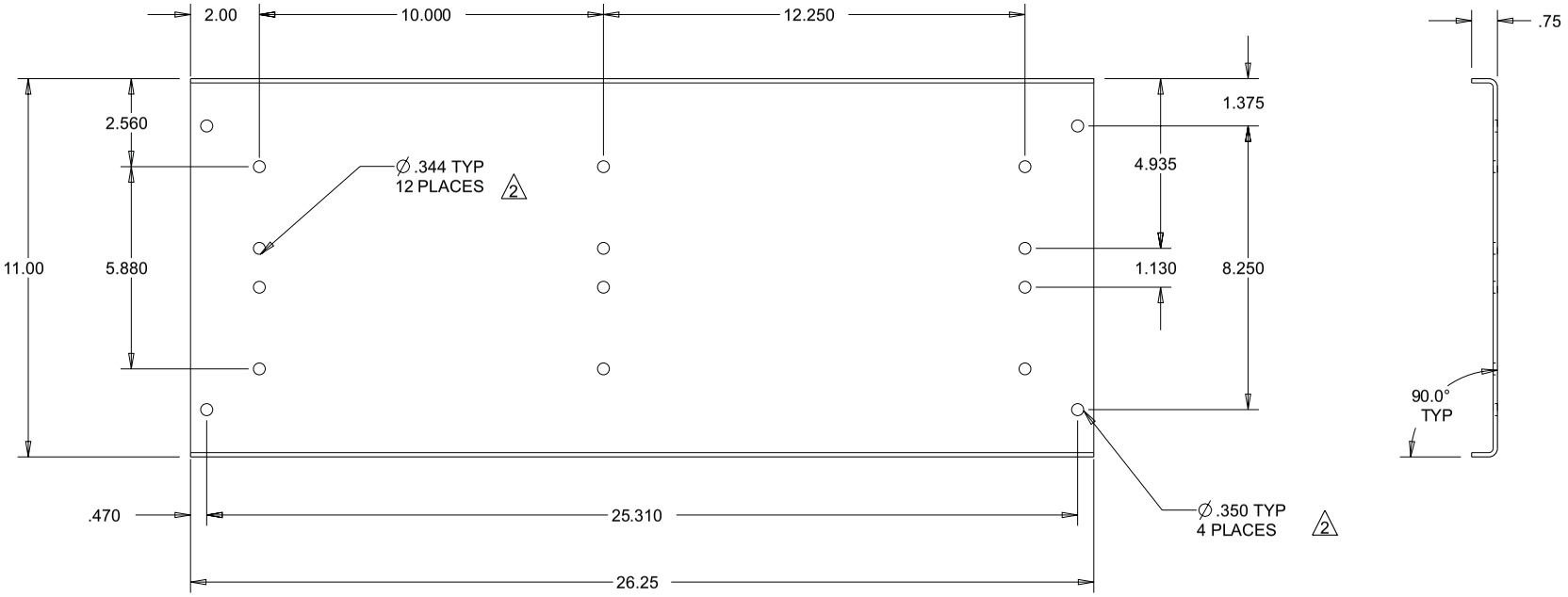

19054-21

REV	DESCRIPTION	DATE	CHKD
3	SEE SHEET 1 FOR CHANGES, REF ECN 2731	29 AUG 2013	CCB
2	.350 DIA QTY 4 WAS QTY 16 .344 DIA HOLES QTY 12 WAS .350 DIA REF ECN 2733	4 JUL 2013	CCB
1	PROTOTYPE RELEASE, REF ECN 2731	25JUNE2013	CCB

MATERIAL
.125 THK ALUMINIUM 5052-H32

SCALE
AS SHOWN

UNLESS OTHERWISE SPECIFIED
DIMENSIONS ARE IN INCHES

XX ± 0.03
XXX ± 0.01

ANGLES ± 0.5°
OTHER _____

Natural Resources Canada

DWN	DATE DWN	CHKD	DATE
CCB	25JUNE2013		

DWG SIZE
A1

INDEX	PART#	DESCRIPTION	QTY
1	9001-5042	NUT 1/4-20 SELF-CLINCH SST	2
2	19055-21	NUT BAR	1

TITLE	DRAWING NUMBER	REV.
NUT BAR, 8.25C/C, 1/4UNC	19055	1
		SHT. 1/2

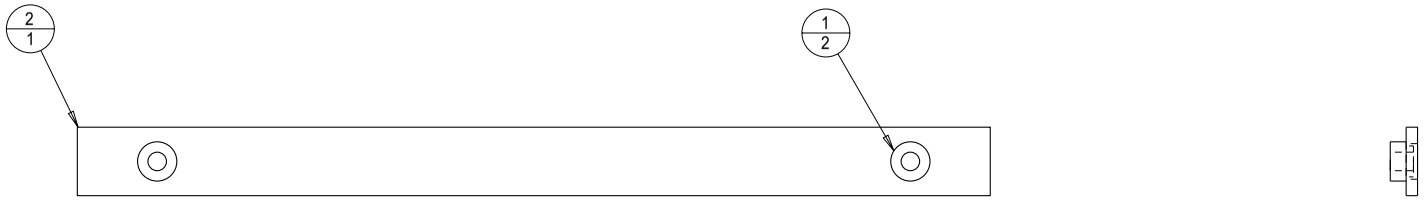

SCALE 0.500

MATERIAL	SCALE										
SEE INDIVIDUAL PART DRAWING	AS SHOWN	UNLESS OTHERWISE SPECIFIED DIMENSIONS ARE IN INCHES	XX ± 0.03 XXX ± 0.01	ANGLES ± 0.5° OTHER _____	Natural Resources Canada				DWG SIZE	1	PROTOTYPE RELEASE, REF ECN 2731	25 JUNE 2013	CCB
					DWN CCB	DATE DWN 25JUN2013	CHKD	DATE	A1	REV	DESCRIPTION	DATE	CHKD

TITLE	DRAWING NUMBER	REV. 1
NUT BAR, 8.25C/C, 1/4UNC	19055	SHT. 2/2

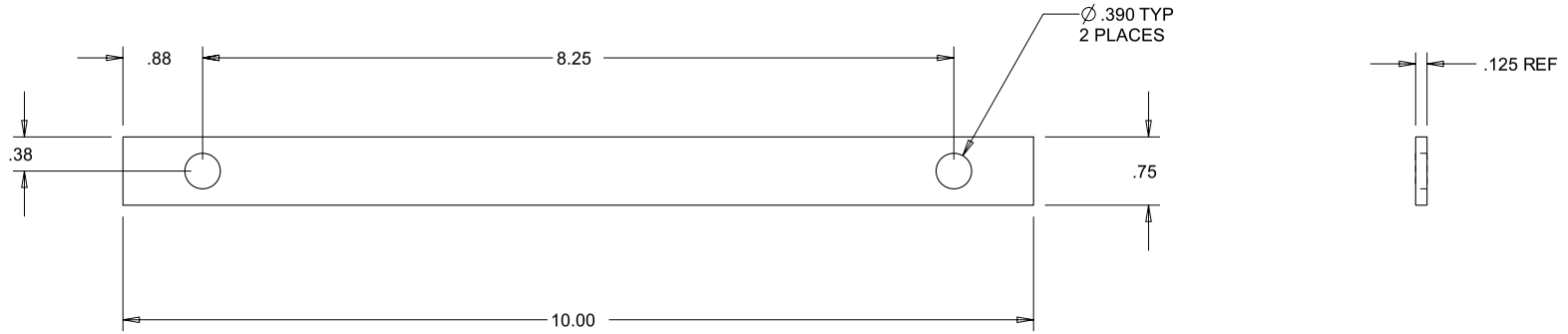

SCALE 0.500

19055-21

MATERIAL	SCALE										
.125 THK ALUMINIUM 5052-H32	AS SHOWN	UNLESS OTHERWISE SPECIFIED DIMENSIONS ARE IN INCHES	XX ± 0.03 XXX ± 0.01	ANGLES ± 0.5° OTHER _____	Natural Resources Canada				DWG SIZE A1	1	PROTOTYPE RELEASE, REF ECN 2731	25JUNE2013	CCB
					DWN CCB	DATE DWN 25JUN2013	CHKD	DATE		REV	DESCRIPTION	DATE	CHKD

TITLE	DRAWING NUMBER	REV.
BRACE, 2.0"X2.0"X.125THK AL	19056	A
		SHT. 1/3

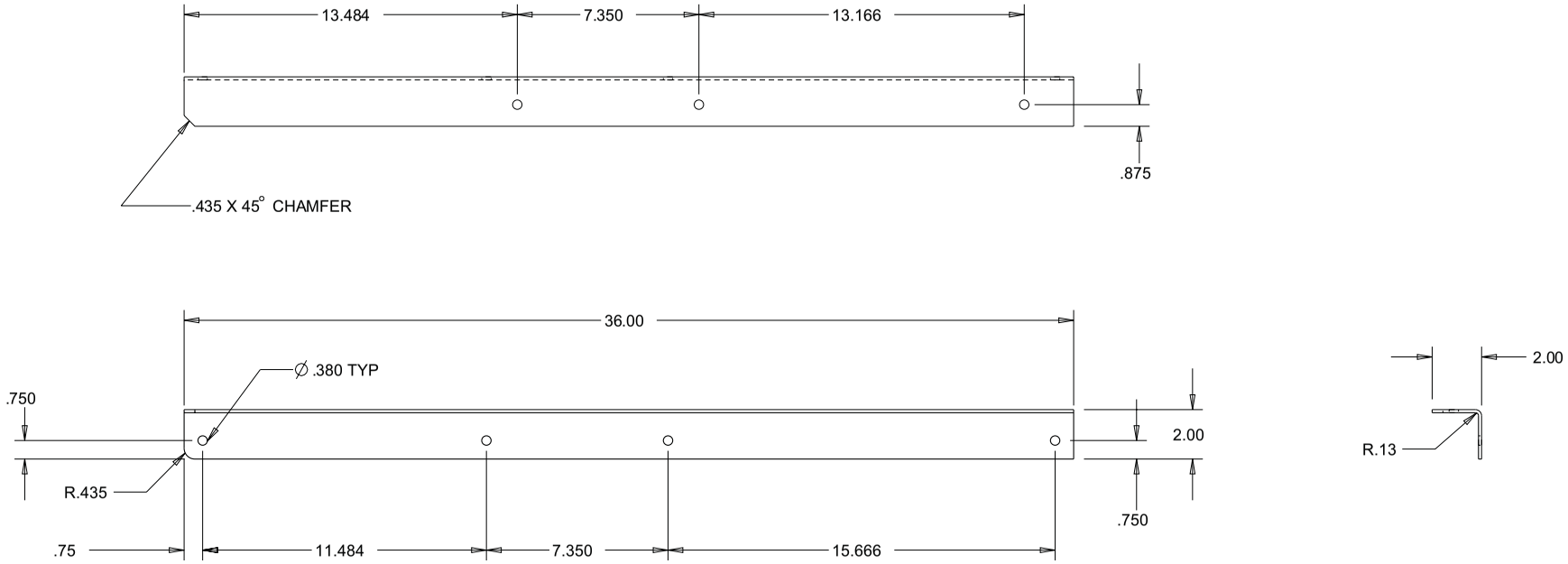

19056-01

SCALE 0.150

MATERIAL	SCALE										
.125 THK ALIUMINIUM 5052-H32	AS SHOWN	UNLESS OTHERWISE SPECIFIED DIMENSIONS ARE IN INCHES	XX ± 0.03 XXX ± 0.01	ANGLES ± 0.5° OTHER _____	Natural Resources Canada				DWG SIZE	A	SEE SHT 2. ECN 2753.	18OCT2013	GCH
					DWN CCB	DATE DWN 25JUN2013	CHKD	DATE	A1	1	PROTOTYPE RELEASE, REF ECN 2731	27JUNE2013	CCB
										REV	DESCRIPTION	DATE	CHKD

INDEX	PART#	DESCRIPTION	QTY
1	9001-5049	NUT 3/8-16 SELF CLINCH STL ZN PLD(.120)	6
2	19056-21	BRACE, 2.0"X2.0"X.125"THK	1

A

TITLE	DRAWING NUMBER	REV.
BRACE, 2.0"X2.0"X.125THK AL	19056	A
		SHT. 2/3

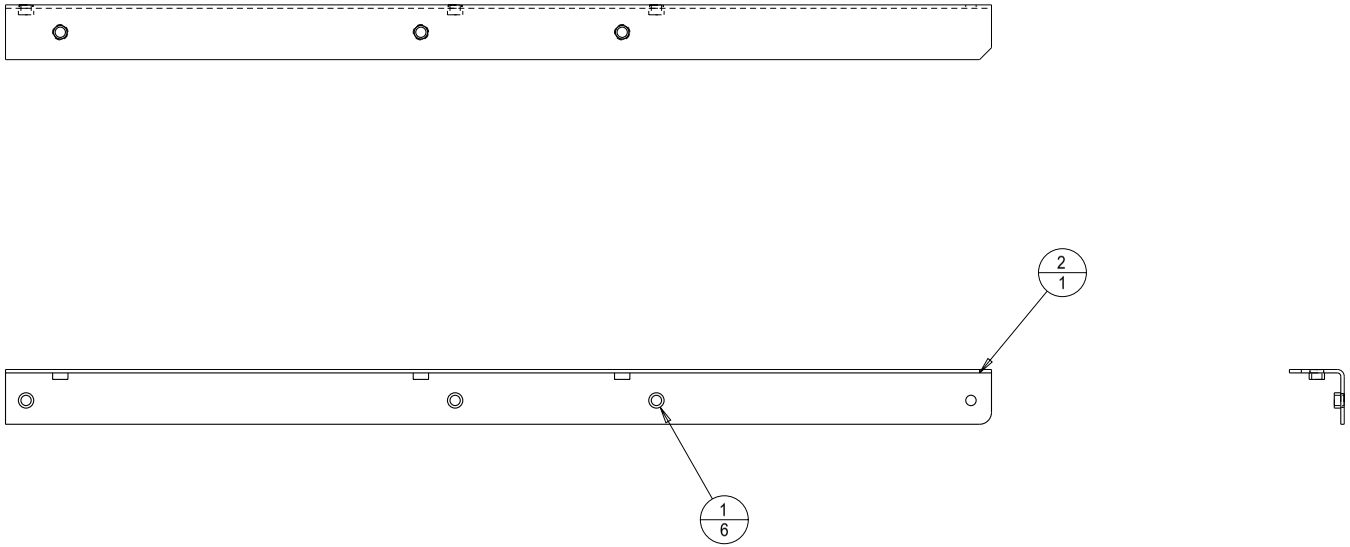

19056-02
BRACE, W/PEMS

SCALE 0.150

MATERIAL	SCALE												
SEE INDIVIDUAL PART DRAWING	AS SHOWN	UNLESS OTHERWISE SPECIFIED DIMENSIONS ARE IN INCHES	XX ± 0.03 XXX ± 0.01	ANGLES ± 0.5° OTHER _____	Natural Resources Canada				DWG SIZE	A	9001-5049 WAS -5039. ECN 2753.	18OCT2013	GCH
					DWN CCB	DATE DWN 25JUN2013	CHKD	DATE	A1	1	PROTOTYPE RELEASE, REF ECN 2731	27 JUNE 2013	
										REV	DESCRIPTION	DATE	CHKD

TITLE	DRAWING NUMBER	REV.
BRACE, 2.0"X2.0"X.125THK AL	19056	A
		SHT. 3/3

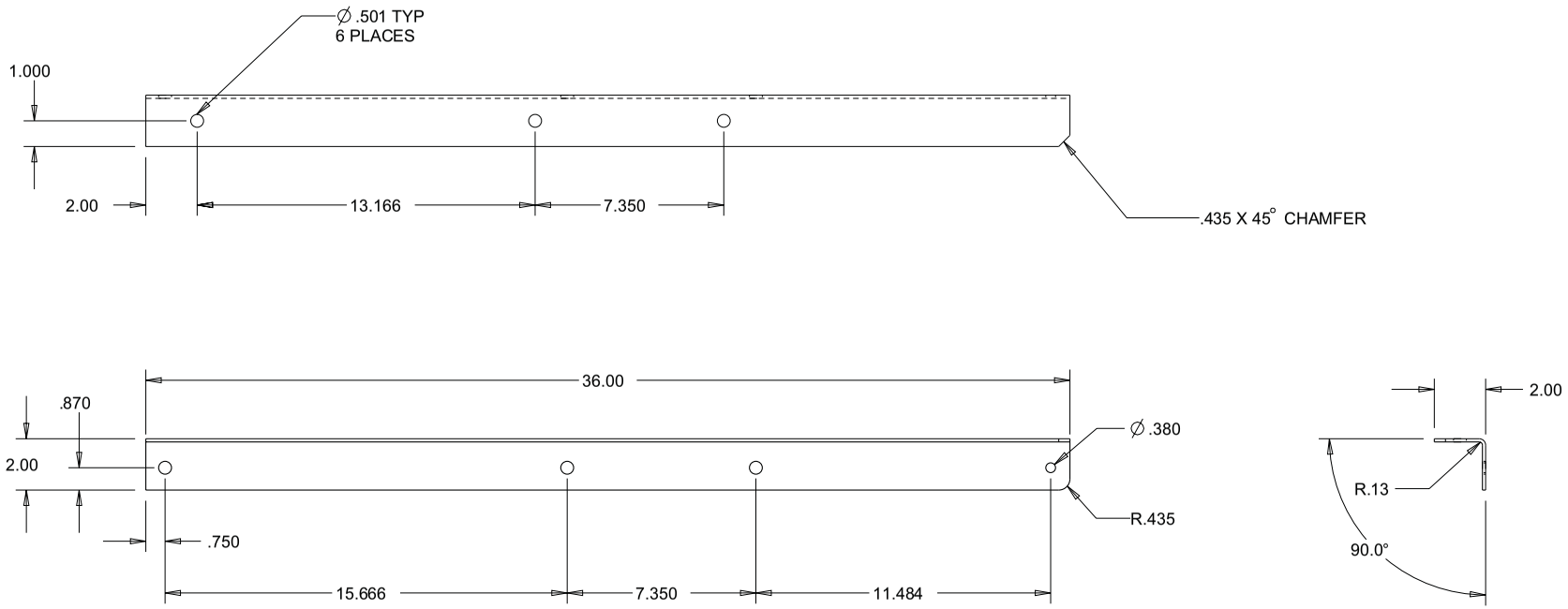

19056-21

SCALE 0.150

MATERIAL	SCALE											
.125 THK ALIUMINIUM 5052-H32	AS SHOWN	UNLESS OTHERWISE SPECIFIED DIMENSIONS ARE IN INCHES	XX ± 0.03 XXX ± 0.01	ANGLES ± 0.5° OTHER _____	Natural Resources Canada				DWG SIZE	A	SEE SHT 2. ECN 2753.	18OCT2013	GCH
					DWN CCB	DATE DWN 25JUN2013	CHKD	DATE	A1	1	PROTOTYPE RELEASE, REF ECN 2731	27 JUNE 2013	CCB
										REV	DESCRIPTION	DATE	CHKD

TITLE	DRAWING NUMBER	REV.
CROSS BRACE, 1.5"W X .125"THK AL	19057	2
		SHT. 1/1

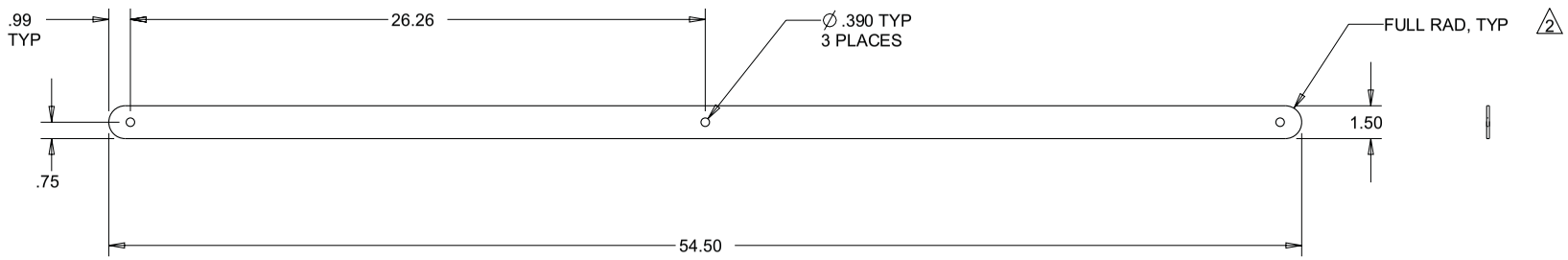

MATERIAL	SCALE										
.125 THK ALUMINIUM 5052-H32	AS SHOWN	UNLESS OTHERWISE SPECIFIED DIMENSIONS ARE IN INCHES	XX ± 0.03 XXX ± 0.01	ANGLES ± 0.5° OTHER _____	Natural Resources Canada				DWG SIZE	2	FULL RAD ADDED TO BOTH ENDS REF ECN 2731	29 AUG 2013	CCB
					DWN CCB	DATE DWN 25JUN2013	CHKD	DATE	A1	1	PROTOTYPE RELEASE, REF ECN 2731	25JUNE2013	CCB
										REV	DESCRIPTION	DATE	CHKD

TITLE	DRAWING NUMBER	REV.
ANTENNA MOUNT	19058	2
		SHT. 1/1

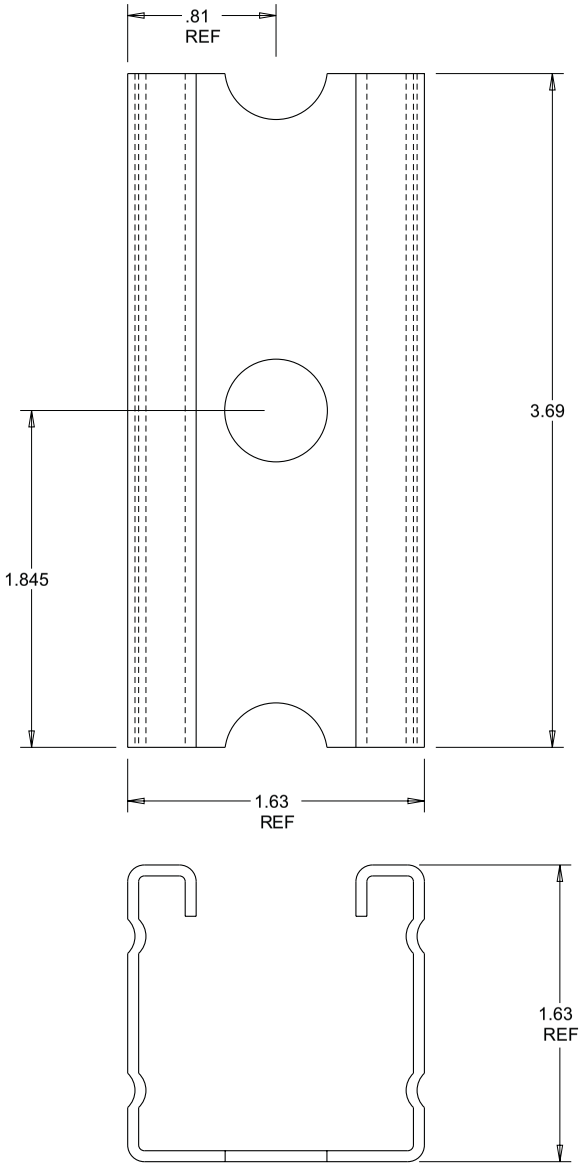

MATERIAL	SCALE										
UNISTRUT P200HS	AS SHOWN	UNLESS OTHERWISE SPECIFIED DIMENSIONS ARE IN INCHES	XX ± 0.03 XXX ± 0.01	ANGLES ± 0.5° OTHER _____	Natural Resources Canada				DWG SIZE	2	DIM 3.69 WAS 1.75, 1.845 WAS .82 REF ECN 2731	28 AUG 13	CCB
					DWN CCB	DATE DWN 25JUNE2013	CHKD	DATE	A1	1	PROTOTYPE RELEASE, REF ECN 2731	25JUNE2013	CCB
										REV	DESCRIPTION	DATE	CHKD

INDEX	PART#	DESCRIPTION	QTY
1	9001-5042	NUT 1/4-20 SELF-CLINCH SST	4
2	19059-21	SUPPORT BRKT, JCT BOX	1

TITLE	DRAWING NUMBER	REV.
JB BOX SUPPORT BRKT	19059	2
		SHT. 1/2

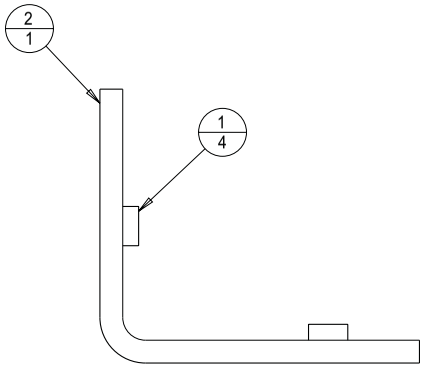

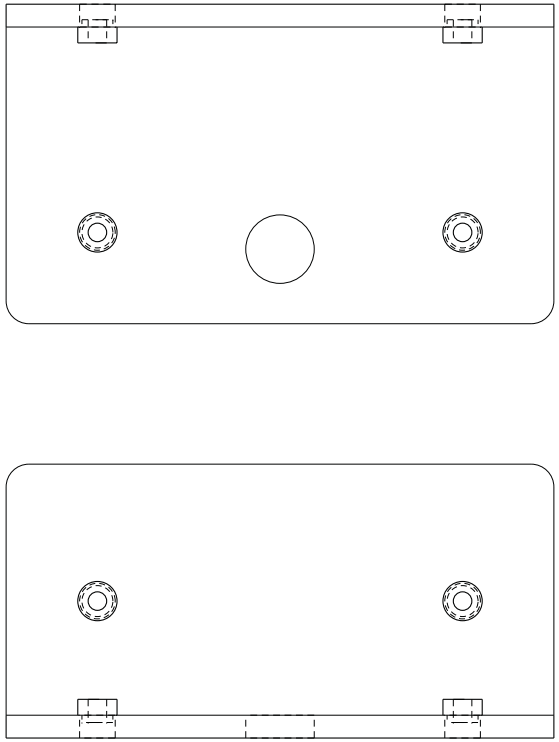

SCALE 0.500

MATERIAL	SCALE											
SEE INDIVIDUAL PART DRAWING	AS SHOWN	UNLESS OTHERWISE SPECIFIED DIMENSIONS ARE IN INCHES	XX ± 0.03 XXX ± 0.01	ANGLES ± 0.5° OTHER _____	Natural Resources Canada				DWG SIZE	2	.75 DIA CLR HOLE ADDED REF ECN 2731	4 JUL 2013	CCB
					DWN CCB	DATE DWN 25JUNE2013	CHKD	DATE	A1	1	PROTOTYPE RELEASE, REF ECN 2731	25JUNE2013	CCB
										REV	DESCRIPTION	DATE	CHKD

TITLE	DRAWING NUMBER	REV. 2
JB BOX SUPPORT BRKT	19059	SHT. 2/2

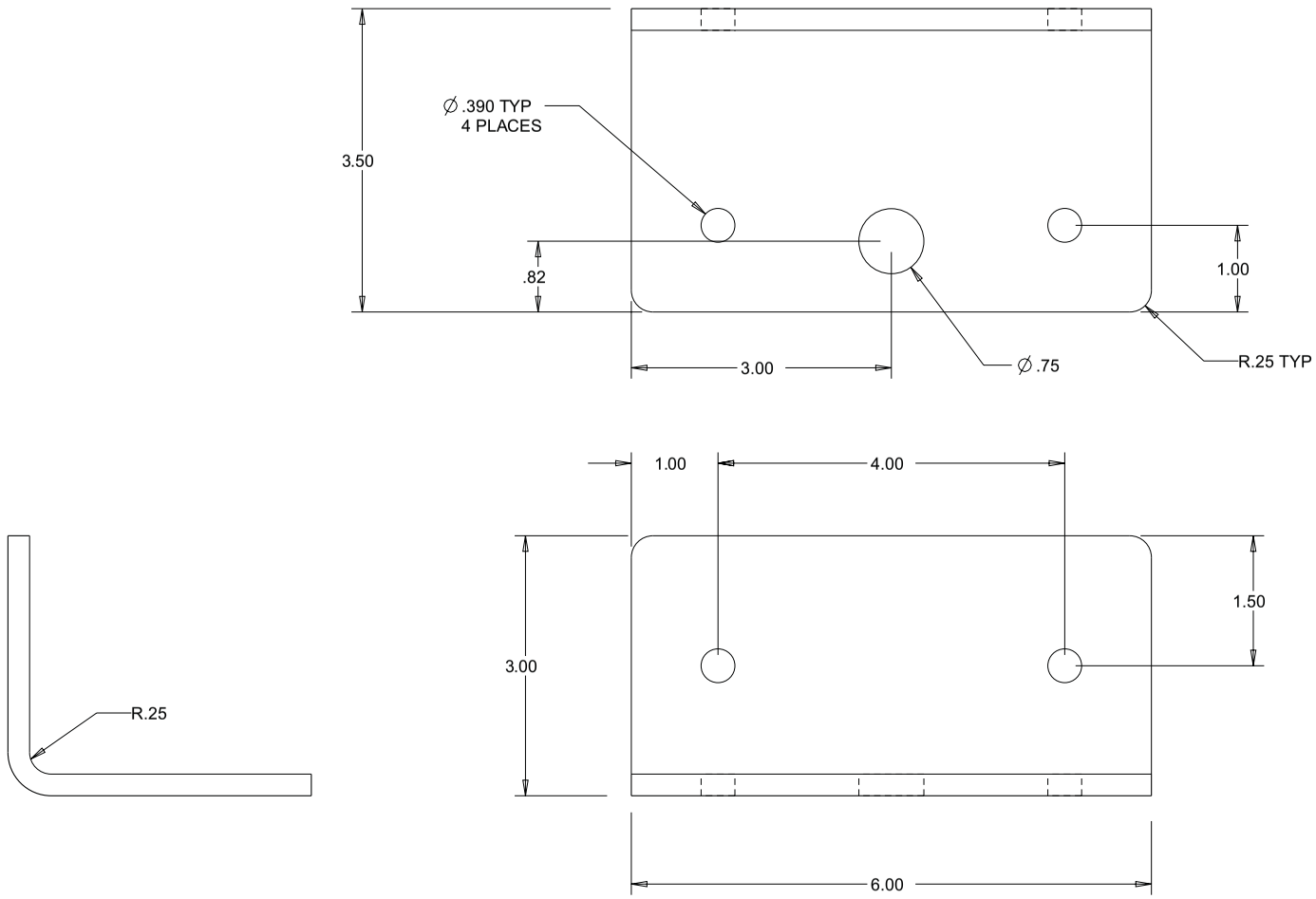

19059-21

SCALE 0.500

MATERIAL	SCALE										
.25 THK ALUMINIUM 5052-H32	AS SHOWN	UNLESS OTHERWISE SPECIFIED DIMENSIONS ARE IN INCHES	XX ± 0.03 XXX ± 0.01	ANGLES ± 0.5° OTHER _____	Natural Resources Canada				DWG SIZE A1	2	.75 DIA CLR HOLE ADDED REF ECN 2731	4 JUL 2013	CB
					DWN CCB	DATE DWN 25JUNE2013	CHKD	DATE		1	PROTOTYPE RELEASE, REF ECN 2731	25JUNE2013	CCB
										REV	DESCRIPTION	DATE	CHKD

TITLE	DRAWING NUMBER	REV.
LOCKING BAR,2x2x45 LONG, AL	19060	2
		SHT. 1/1

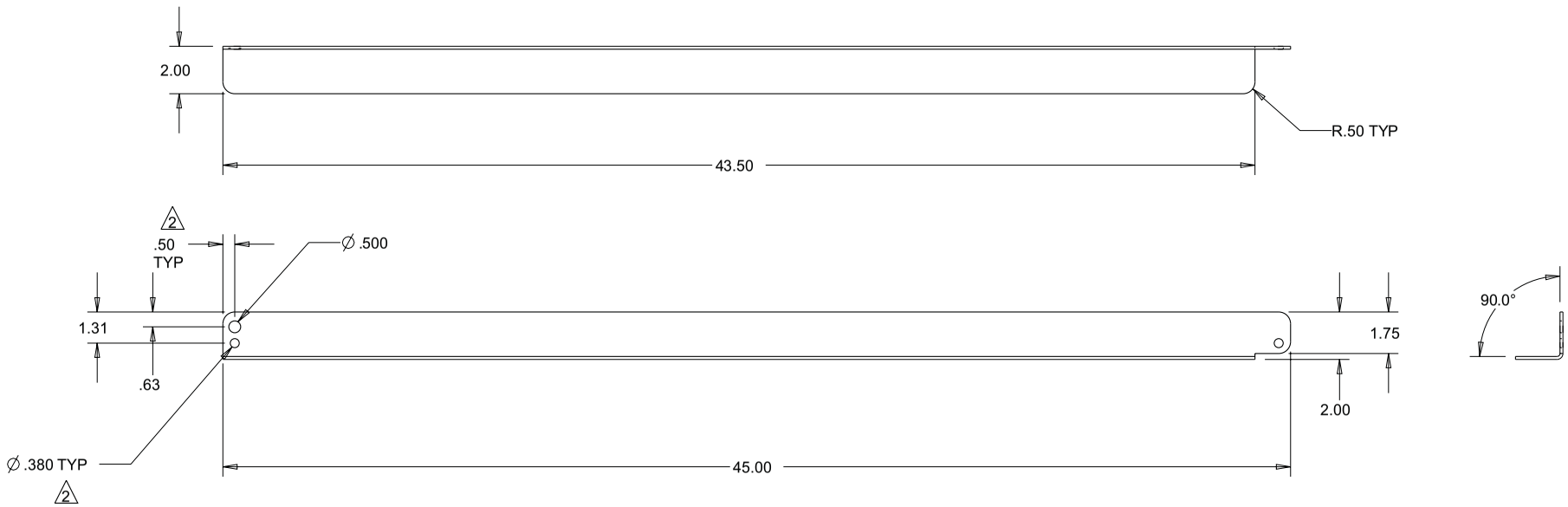

SCALE 0.150

MATERIAL	SCALE										
.125 THK ALUMINIUM 5052-H32	AS SHOWN	UNLESS OTHERWISE SPECIFIED DIMENSIONS ARE IN INCHES	XX ± 0.03 XXX ± 0.01	ANGLES ± 0.5° OTHER _____	Natural Resources Canada				DWG SIZE	2	.380 DIA HOLE TYP WAS QTY 1, TYP ADDED TO .50 DIM, REF ECN 2731	29 AUG 2013	CCB
					DWN CCB	DATE DWN 25JUN2013	CHKD	DATE	A1	1	PROTOTYPE RELEASE, REF ECN 2731	25 JUNE 2013	CCB
										REV	DESCRIPTION	DATE	CHKD

INDEX	PART#	DESCRIPTION	QTY
1	KRALOY_JB_664		1

TITLE	DRAWING NUMBER	REV.
JB BOX, MODIFIED W/HOLES	19061	2
		SHT. 1/1

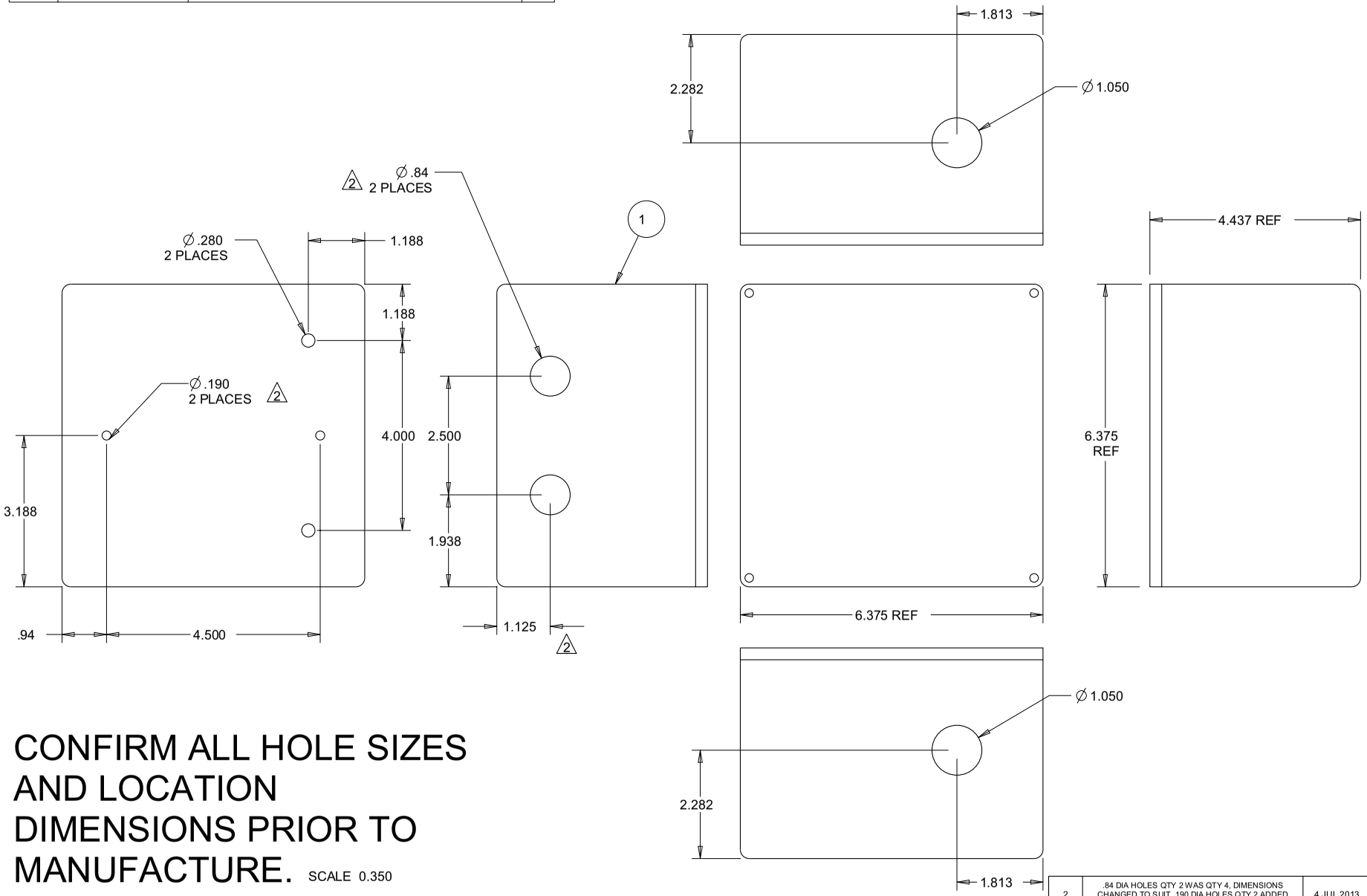

CONFIRM ALL HOLE SIZES AND LOCATION DIMENSIONS PRIOR TO MANUFACTURE. SCALE 0.350

REV	DESCRIPTION	DATE	CHKD
2	.84 DIA HOLES QTY 2 WAS QTY 4, DIMENSIONS CHANGED TO SUIT .190 DIA HOLES QTY 2 ADDED REF ECN 2731	4 JUL 2013	CCB
1	PROTOTYPE RELEASE, REF ECN 2731	19JUN2013	CCB

MATERIAL	SCALE							
AS SHOWN	AS SHOWN	UNLESS OTHERWISE SPECIFIED DIMENSIONS ARE IN INCHES	XX ± 0.03 XXX ± 0.01	ANGLES ± 0.5° OTHER _____	Natural Resources Canada	DWG SIZE A1		
					DWN CCB	DATE DWN 19JUN2013	CHKD	DATE

INDEX	PART#	DESCRIPTION	QTY
1	9001-5049	NUT 3/8-16 SELF CLINCH STL ZN PLD(.120)	1
2	19062-21	LONG BRACE	1

2 A

TITLE	DRAWING NUMBER	REV.
LONG BRACE SOLAR PANEL SUPPORT, CHANNEL	19062	A SHT. 1/2

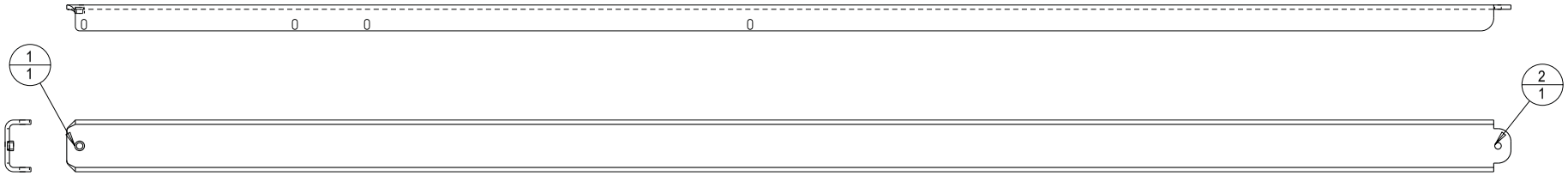

19062

REV	DESCRIPTION	DATE	CHKD
A	9001-5049 WAS -5039. ECN 2753.	18OCT2013	GCH
3	SEE SHEET 2 FOR CHANGES REF ECN 2731	29 AUG 2013	CCB
2	PEM NUTS QTY 1 WAS QTY 9 REF ECN 2731	4 JUL 2013	CCB
1	PROTOTYPE RELEASE, REF ECN 2731	27JUNE2013	CCB

MATERIAL
SEE INDIVIDUAL PART DRAWING

SCALE
AS SHOWN

UNLESS OTHERWISE SPECIFIED
DIMENSIONS ARE IN INCHES

XX ± 0.03
XXX ± 0.01

ANGLES ± 0.5°
OTHER _____

Natural Resources Canada

DWN	DATE DWN	CHKD	DATE
CCB	27JUN2013		

DWG SIZE
A1

TITLE	DRAWING NUMBER	REV.
LONG BRACE SOLAR PANEL SUPPORT, CHANNEL	19062	A SHT. 2/2

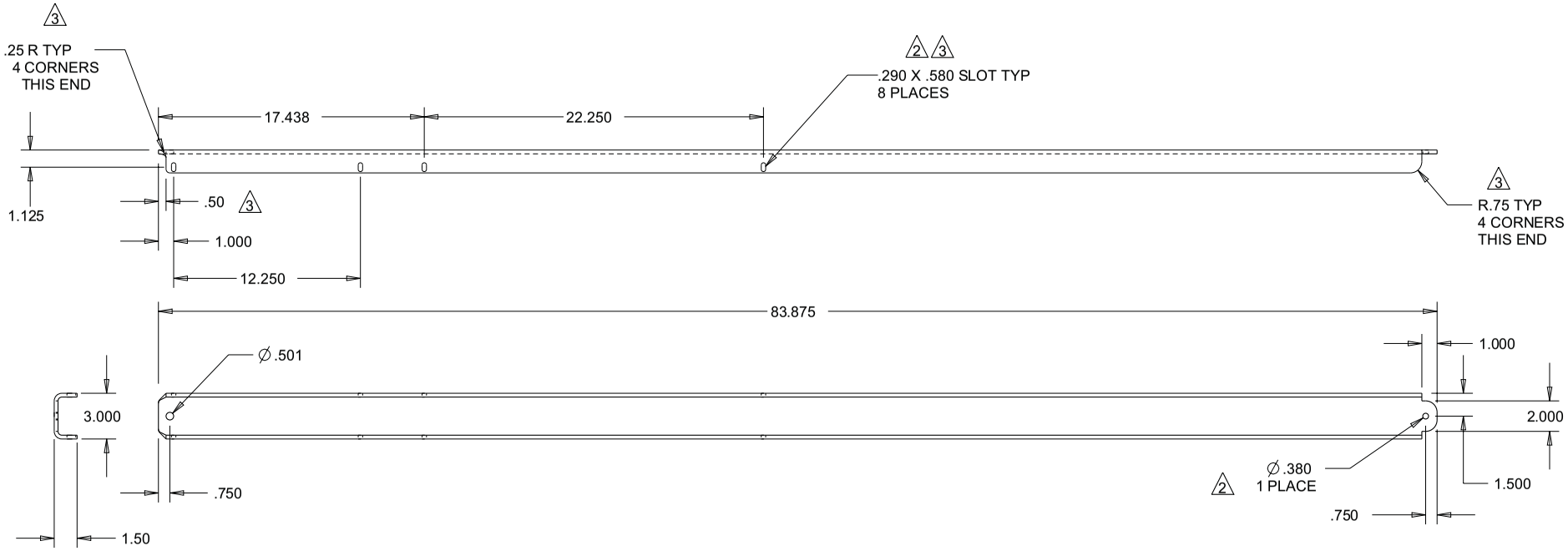

19062-21

REV	DESCRIPTION	DATE	CHKD
A	SEE SHT 1. ECN 2753.	18OCT2013	GCH
3	.290X.580 SLOTS WAS .280 DIA HOLES .75 R TYP WAS .50R, .25R ADDED .50 NOTCH ADDED, REF ECN 2731	29 AUG 2013	CCB
2	.380 DIA QTY 1 WAS QTY 9 .280 DIA HOLES QTY 8 WAS .380 DIA REF ECN 2731	4 JUL 2013	CCB
1	PROTOTYPE RELEASE, REF ECN 2731	27JUNE2013	CCB

MATERIAL	SCALE				Natural Resources Canada				DWG SIZE
ALUMINIUM 5052-H32, .25" THICK	AS SHOWN	UNLESS OTHERWISE SPECIFIED DIMENSIONS ARE IN INCHES	XX ± 0.03 XXX ± 0.01	ANGLES ± 0.5° OTHER _____	DWN CCB	DATE DWN 27JUN2013	CHKD	DATE	A1

INDEX	PART#	DESCRIPTION	QTY
1	9000-1090	SCR MACH #8-32*.5"L P/BH SST	10
2	9000-1116	SCR MACH #6-32*.25"L P/BH SST	4
3	9001-0037	NUT 1/4-20 HEX SST 18-8	1
4	9002-0045	WSHR #8 FLAT SST 18-8	10
5	9002-0046	WSHR #6 FLAT SAE SST	4
6	9002-0066	WSHR 1/4" FLAT SAE SST	1
7	9002-1024	WSHR #8 LOCK SST 18-8	10
8	9002-1026	WSHR #6 LOCK REG SST	4
9	9002-1029	WSHR 1/4" LOCK SST	1
10	19064	CONTROL PANEL	1
11	19065	LABEL, POLARITY	1
12	BURNDY_K2A25U	Dual-Rated (AL/CU) Two-Barrel Lug, #2/0 to #14 AWG Wire and Cable	1
13	ERICO_569010	DISTRIBUTION TERMINAL BLOCK, IN #4-16 AWG,OUT 4#8-16 & 2#4-16	2
14	SUNSAVER_MPPT_15L	SOLAR CONTROLLER, 15A	1
	WIRE SET	SEE PAGE 2	

TITLE	DRAWING NUMBER	REV.
CONTROL PANEL, POPULATED NRCAN DC KIT	19063	1
		SHT. 1/2

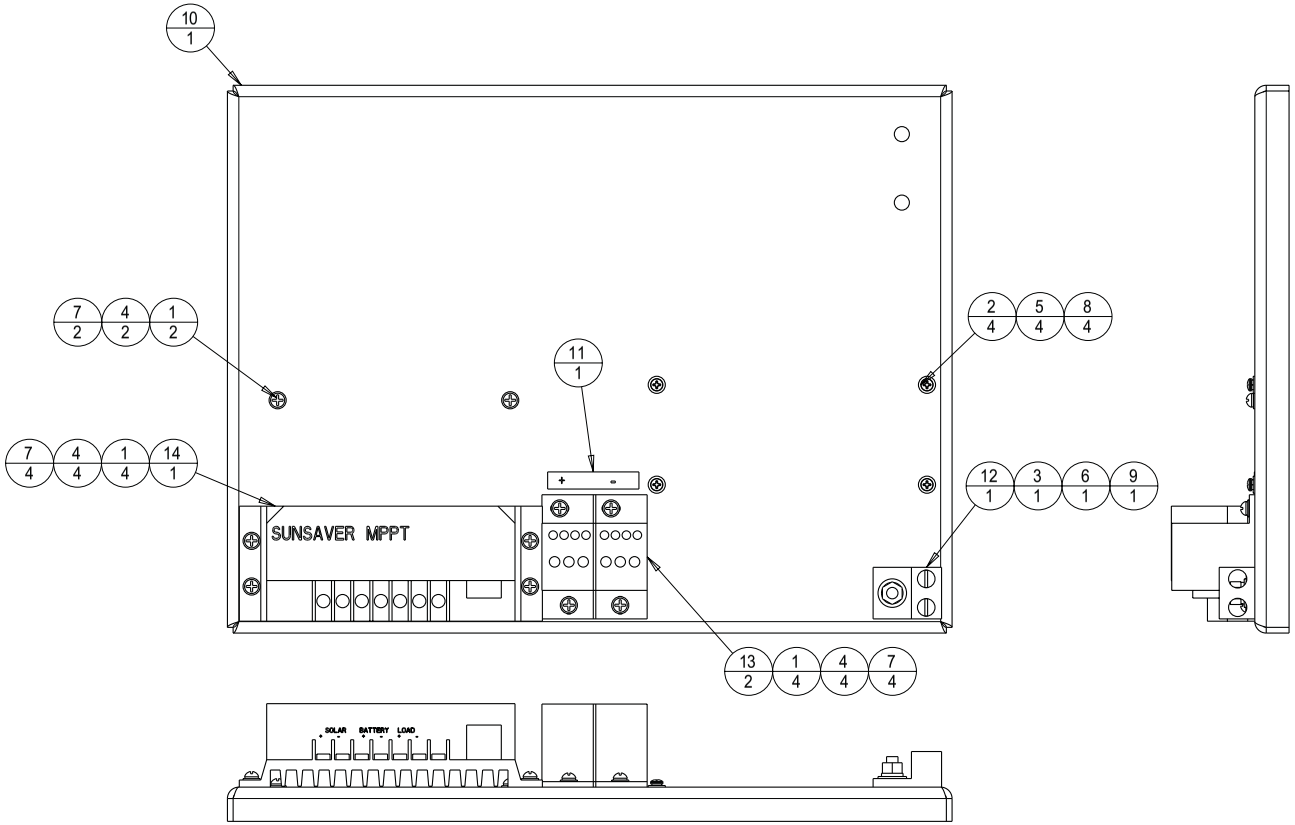

MATERIAL	SCALE				Natural Resources Canada				DWG SIZE	1	PROTOTYPE RELEASE. ECN 2731.	06SEP2013	GCH
AS SHOWN	AS SHOWN	UNLESS OTHERWISE SPECIFIED DIMENSIONS ARE IN INCHES	XX ± 0.03 XXX ± 0.01	ANGLES ± 0.5° OTHER _____	DWN GCH	DATE DWN 06SEP2013	CHKD	DATE	A1	REV	DESCRIPTION	DATE	CHKD

TITLE	DRAWING NUMBER	REV.
CONTROL PANEL, POPULATED NRCAN DC KIT	19063	1
		SHT. 2/2

WIRE LIST

ITEM	GUAGE (AWG)	COLOUR	WIRE #	LETTER	LENGTH (")	FROM	TERMINAL	CONNECTOR	STRIP	TO	TERMINAL	CONNECTOR	STRIP	NOTE
1	10	RED	NA	NA	15.5	SUNSAVER SOLAR +	9010-0041	NONE	.313	SOCKET1 PIN 2	MOLEX-42815-0011	SOCKET1 MOLEX-42818-0212	NOTE 1	
2	10	BLACK	NA	NA	15.5	SUNSAVER SOLAR -	9010-0041	NONE	.313	SOCKET1 PIN 1	MOLEX-42815-0011	SOCKET 1	NOTE 1	
3	10	RED	NA	NA	16.5	SUNSSAVER BATTERY +	9010-0041	NONE	.313	PLUG1 PIN 2	MOLEX-42817-0011	PLUG 1 MOLEX-42816-0212	NOTE 1	
4	10	BLACK	NA	NA	16.5	SUNSAVER BATTERY -	9010-0041	NONE	.313	PLUG1 PIN 1	MOLEX-42817-0011	PLUG 1	NOTE 1	
5	10	RED	NA	NA	5.75	SUNSAVER LOAD +	9010-0041	NONE	.313	POSITIVE TB TERM 1 OF 3 ERIFLEX 569010	NA	NONE	.50	
6	10	BLACK	NA	NA	7.00	SUNSAVER LOAD -	9010-0041	NONE	.313	NEGATIVE TB TERM 1 OF 3 ERIFLEX 569010	NA	NONE	.50	
7	10	RED	NA	NA	45.5		9010-0018	NONE	.313	SOCKET 2 PIN 2	MOLEX-42815-0011	SOCKET 2 MOLEX-42818-0212	NOTE 1	
8	10	BLACK	NA	NA	45.5		9010-0018	NONE	.313	SOCKET 2 PIN 1	MOLEX-42815-0011	SOCKET 2	NOTE 1	
9														

NOTE	DETAILS
1	AS PER MANUFACTURER.
2	SET COMPOSED OF 3 HARNESS AND 2 WIRES.

MATERIAL	SCALE												
AS SHOWN	AS SHOWN	UNLESS OTHERWISE SPECIFIED DIMENSIONS ARE IN INCHES	XX ± 0.03 XXX ± 0.01	ANGLES ± 0.5° OTHER _____	Natural Resources Canada				DWG SIZE	1	PROTOTYPE RELEASE. ECN 2731.	06SEP2013	GCH
					DWN GCH	DATE DWN 06SEP2013	CHKD	DATE	A1	REV	DESCRIPTION	DATE	CHKD

INDEX	PART#	DESCRIPTION	QTY
1	9000-9002	STUD, SELF-CLINCH 1/4-20*.75"L SST	1
2	9001-5047	NUT #8-32 SELF CLINCH STL ZN PLD	10
3	19064-21	CONTROL PANEL	1

TITLE	DRAWING NUMBER	REV.
CONTROL PANEL, W HDWR	19064	1
		SHT. 1/2

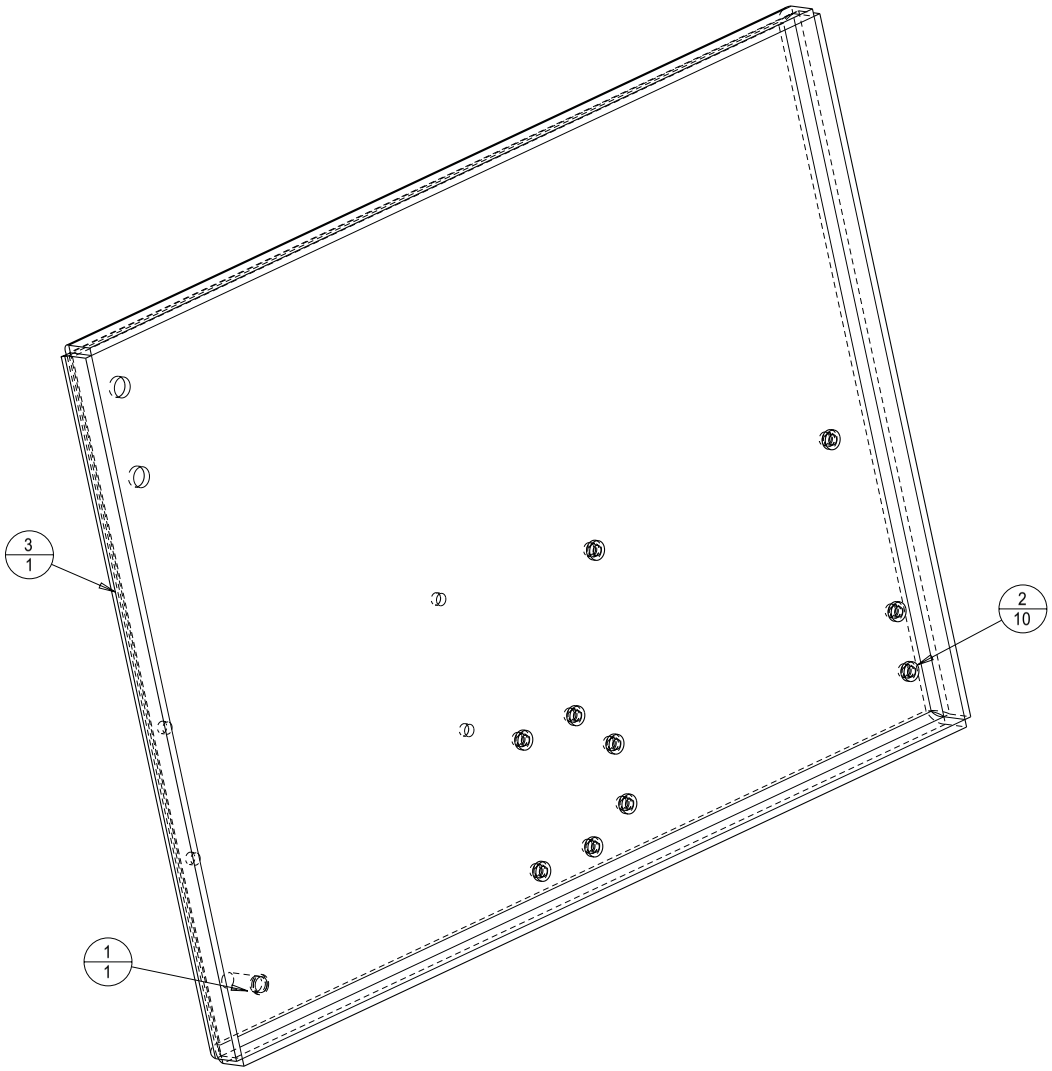

SCALE 0.350

MATERIAL	SCALE											
AS SHOWN	AS SHOWN	UNLESS OTHERWISE SPECIFIED DIMENSIONS ARE IN INCHES	XX ± 0.03 XXX ± 0.01	ANGLES ± 0.5° OTHER _____	Natural Resources Canada				DWG SIZE	1	PROTOTYPE RELEASE. ECN 2731.	5SEP2013	GCH
					DWN GCH	DATE DWN 5SEP2013	CHKD	DATE	A1	REV	DESCRIPTION	DATE	CHKD

TITLE	DRAWING NUMBER	REV. 1
CONTROL PANEL, W HDWR	19064	SHT. 2/2

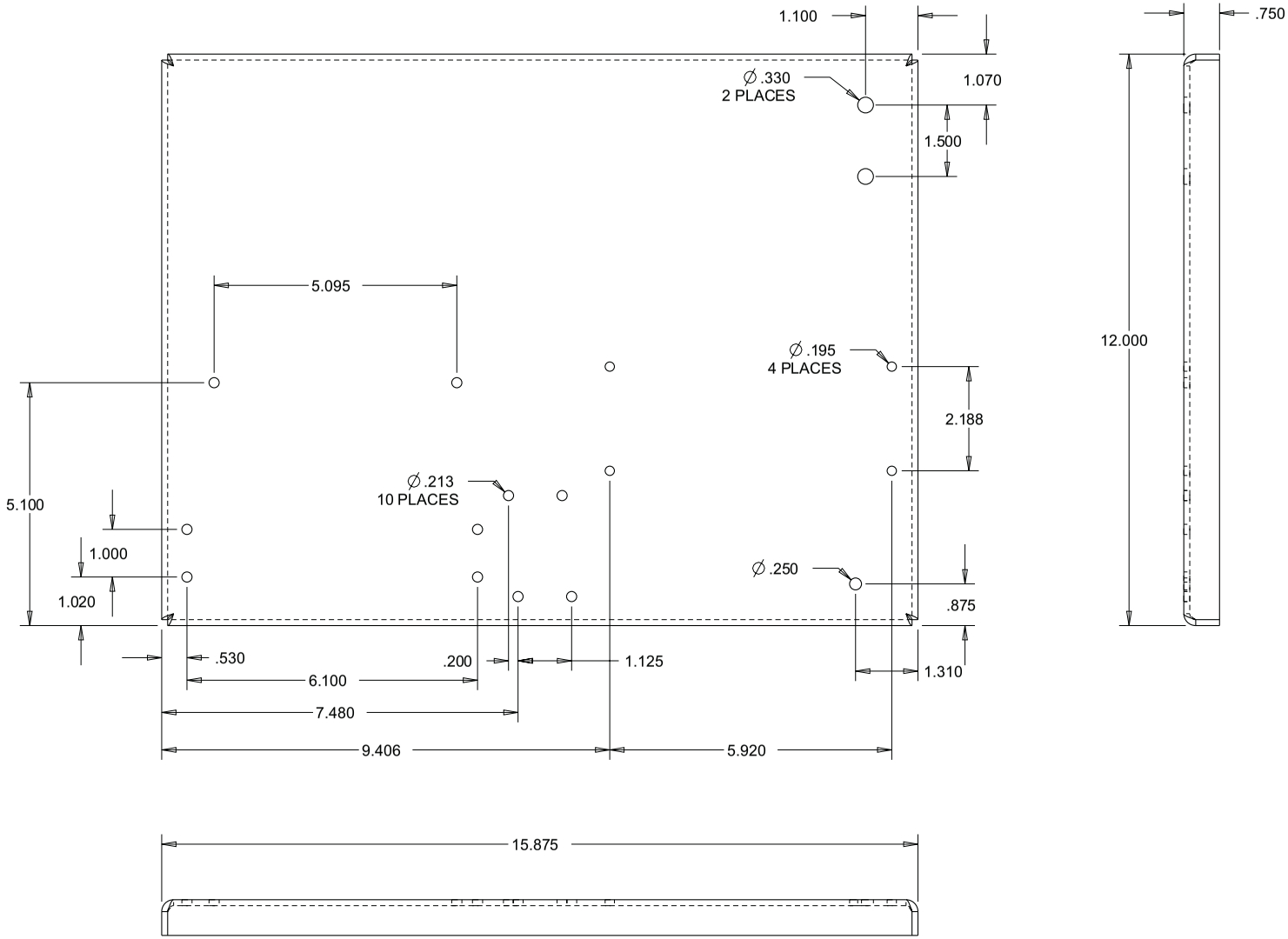

MATERIAL	SCALE										
ALUMINIUM 5052-H32, 1/8" THICK	AS SHOWN	UNLESS OTHERWISE SPECIFIED DIMENSIONS ARE IN INCHES	XX ± 0.03 XXX ± 0.01	ANGLES ± 0.5° OTHER _____	Natural Resources Canada				DWG SIZE A1	1	PROTOTYPE RELEASE. ECN 2731.	5SEP2013	GCH
					DWN GCH	DATE DWN 5SEP2013	CHKD	DATE		REV	DESCRIPTION	DATE	CHKD

TITLE	DRAWING NUMBER	REV.
LABEL, POLARITY	19065	1
		SHT. 1/1

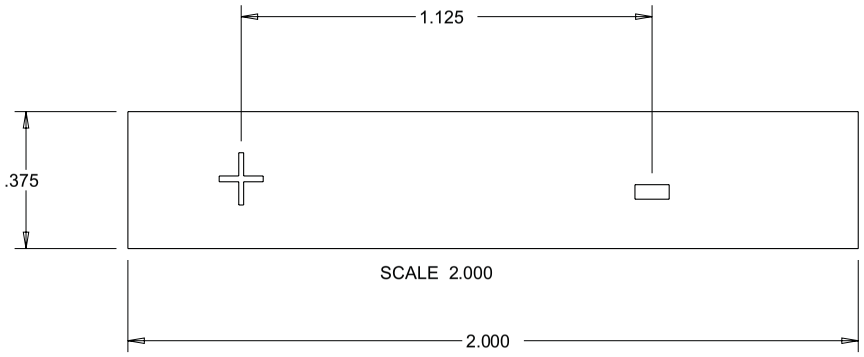

MATERIAL	SCALE										
ZEBRA THERMAL TRANSFER Z-ULTIMATE SELECT 3000 WHITE MEDIA .375 X 2.00" ZEBRA 5100 RESIN BLACK RIBBON	AS SHOWN	UNLESS OTHERWISE SPECIFIED DIMENSIONS ARE IN INCHES	XX ± 0.03 XXX ± 0.01	ANGLES ± 0.5° OTHER _____	Natural Resources Canada				DWG SIZE	1	PROTOTYPE RELEASE. ECN 2731.	06SEP2013	GCH
					DWN GCH	DATE DWN 06SEP2013	CHKD	DATE	A1	REV	DESCRIPTION	DATE	CHKD

INDEX	PART#	DESCRIPTION	QTY	
1	9019-0042	CONDUIT, FLEX, 3/4" LIQ-TITE, ARMOURED	1	
2	9019-1007	CONN, LIQ-TITE, 3/4" 90 DEG	1	
3	9019-1010	CONN, LIQ-TITE, 3/4" STRAIGHT	1	
4	9019-1018	WSHR, SEALING RING 3/4"DIA METAL LIQ-TIT	1	
5	SCEPTER_TSRC15	STRAIN RELIEF CONNECTOR, 3/4 NPT THREAD PVC	1	
	AIR802 PART NUMBER CA195-B-TNPTNP-020F	COAXIAL CABLE, CA195, TNC PLUG MALE BOTH ENDS, 20' LG	1	NOT SHOWN

TITLE	DRAWING NUMBER	REV.
HARNESS DC KIT, GEOPHYSICAL STATION	19066	1 SHT. 1/5

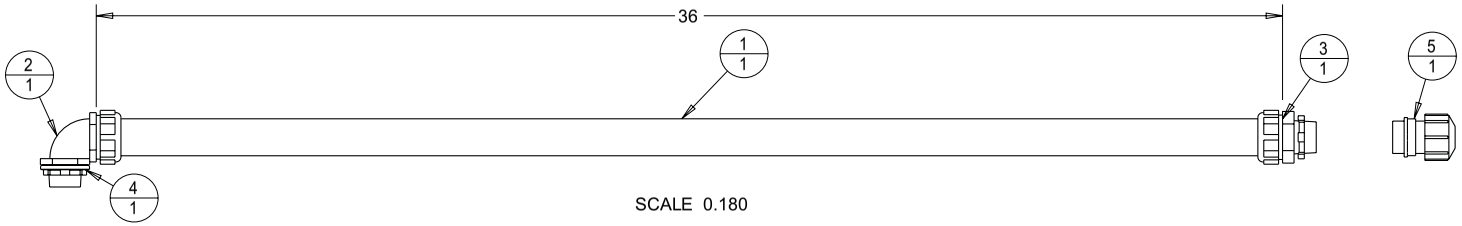

19066-01
YAGI ANTENNA HARNESS

MATERIAL	SCALE										
AS SHOWN	AS SHOWN	UNLESS OTHERWISE SPECIFIED DIMENSIONS ARE IN INCHES	XX ± 0.03 XXX ± 0.01	ANGLES ± 0.5° OTHER _____	Natural Resources Canada				DWG SIZE	1	PROTOTYPE RELEASE. ECN 2731.	09SEP2013	GCH
					DWN GCH	DATE DWN 9SEP2013	CHKD	DATE	A1	REV	DESCRIPTION	DATE	CHKD

INDEX	PART#	DESCRIPTION	QTY
1	9019-0049	CONDUIT, FLEX, 1/2" LIQ-TITE, ARMOURED	1
2	9019-1008	CONN, LIQ-TITE, 1/2" 90 DEG	1
3	9019-1016	CONN, LIQ-TITE, 1/2" STRAIGHT	1
	9007-0002	WIRE 10 AWG TEW STR BLK	72"
	9007-0021	WIRE 10 AWG TEW STR RED	72"

TITLE	DRAWING NUMBER	REV.
HARNESS DC KIT, GEOPHYSICAL STATION	19066	1 SHT. 2/5

NOTE:
INSERT WIRE INTO CONDUIT WITH EQUAL LENGTH EXTENDING ON EITHER END.

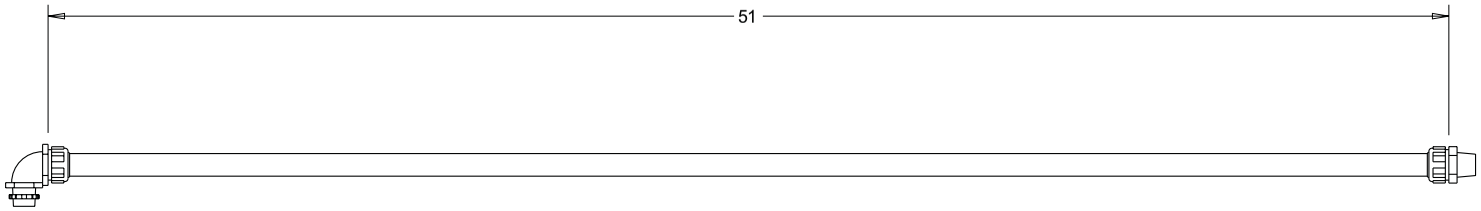

SCALE 0.150

19066-02
UPPER SOLAR PANEL HARNESS

MATERIAL	SCALE										
AS SHOWN	AS SHOWN	UNLESS OTHERWISE SPECIFIED DIMENSIONS ARE IN INCHES	XX ± 0.03 XXX ± 0.01	ANGLES ± 0.5° OTHER _____	Natural Resources Canada				DWG SIZE	1	PROTOTYPE RELEASE. ECN 2731.	09SEP2013	GCH
					DWN GCH	DATE DWN 9SEP2013	CHKD	DATE	A1	REV	DESCRIPTION	DATE	CHKD

INDEX	PART#	DESCRIPTION	QTY
1	9019-0049	CONDUIT, FLEX, 1/2" LIQ-TITE, ARMOURED	1
2	9019-1008	CONN, LIQ-TITE, 1/2" 90 DEG	1
3	9019-1016	CONN, LIQ-TITE, 1/2" STRAIGHT	1
	9007-0002	WIRE 10 AWG TEW STR BLK	51"
	9007-0021	WIRE 10 AWG TEW STR RED	51"

TITLE	DRAWING NUMBER	REV.
HARNESS DC KIT, GEOPHYSICAL STATION	19066	1 SHT. 3/5

NOTE:
INSERT WIRE INTO CONDUIT WITH EQUAL LENGTH EXTENDING ON EITHER END.

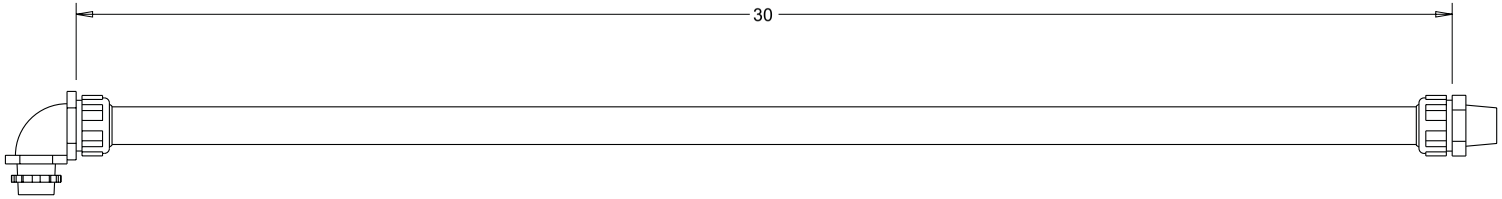

SCALE 0.250

19066-03
LOWER SOLAR PANEL HARNESS

MATERIAL	SCALE											
AS SHOWN	AS SHOWN	UNLESS OTHERWISE SPECIFIED DIMENSIONS ARE IN INCHES	XX ± 0.03 XXX ± 0.01	ANGLES ± 0.5° OTHER _____	Natural Resources Canada				DWG SIZE	1	PROTOTYPE RELEASE. ECN 2731.	09SEP2013	GCH
					DWN GCH	DATE DWN 9SEP2013	CHKD	DATE	A1	REV	DESCRIPTION	DATE	CHKD

INDEX	PART#	DESCRIPTION	QTY
1	9019-0042	CONDUIT, FLEX, 3/4" LIQ-TITE, ARMOURED	1
2	9019-1007	CONN, LIQ-TITE, 3/4" 90 DEG	1
3	9019-1010	CONN, LIQ-TITE, 3/4" STRAIGHT	1
4	9019-1018	WSHR, SEALING RING 3/4"DIA METAL LIQ-TIT	1
	AIR802 PART NUMBER CA195-B-TNPTNP-015F	COAXIAL CABLE, CA195, TNC PLUG MALE BOTH ENDS, 15' LG	1

NOTE 3

TITLE	DRAWING NUMBER	REV.
HARNESS DC KIT, GEOPHYSICAL STATION	19066	1 SHT. 4/5

ITEM	GUAGE (AWG)	COLOUR	WIRE #	LETTER	LENGTH (")	FROM	TERMINAL	CONNECTOR	STRIP	TO	TERMINAL	CONNECTOR	STRIP	NOTE
1	10	GREEN	NA	NA	98.00		NONE	NONE	0		NONE	NONE	0	
2	10	RED	NA	NA	98.00		NONE	NONE	0		MOLEX-42817-0011	PLUG 1 MOLEX-42816-0212	NOTE 1	NOTE 2
3	10	BLK	NA	NA	98.00		NONE	NONE	0		MOLEX-42817-0011	PLUG 1	NOTE 1	NOTE 2

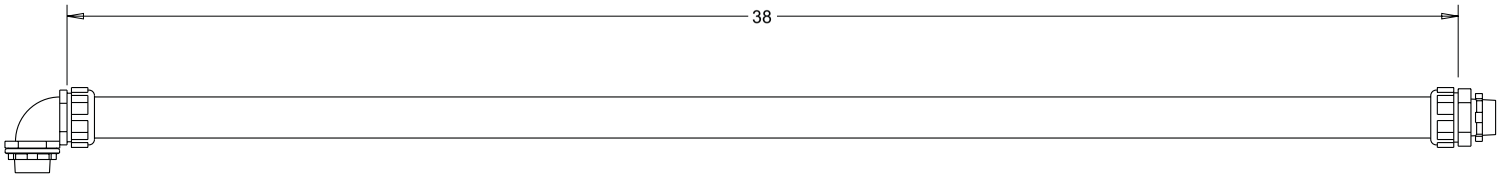

NOTE 2 AND 4

SCALE 0.200

NOTE	DETAILS
1	AS PER MANUFACTURER.
2	PLUG 1 CONNECTED TO WIRES EXITING ELBOW.
3	ASSEMBLE COAX CABLE WITH OTHER WIRES IN CONDUIT.
4	ALL WIRES (COAX INCLUDED) EXTEND 52" FROM ELBOW

19066-04
BATTERY / GPS HARNESS

MATERIAL	SCALE											
AS SHOWN	AS SHOWN	UNLESS OTHERWISE SPECIFIED DIMENSIONS ARE IN INCHES	XX ± 0.03 XXX ± 0.01	ANGLES ± 0.5° OTHER _____	Natural Resources Canada				DWG SIZE	1	PROTOTYPE RELEASE. ECN 2731.	09SEP2013	GCH
					DWN GCH	DATE DWN 9SEP2013	CHKD	DATE	A1	REV	DESCRIPTION	DATE	CHKD

TITLE	DRAWING NUMBER	REV.
HARNESS DC KIT, GEOPHYSICAL STATION	19066	1 SHT. 5/5

ITEM	GUAGE (AWG)	COLOUR	WIRE #	LETTER	LENGTH (")	FROM	TERMINAL	CONNECTOR	STRIP	TO	TERMINAL	CONNECTOR	STRIP	NOTE
1	10	GREEN	NA	NA	7.75	JB MOUNTING BOLT	9010-0017	NONE	.313	TERMINAL 1 GROUND BLOCK, JB	NONE	NONE	.313	INSTALL

19066-05
GROUND WIRE, JB

MATERIAL	SCALE										
AS SHOWN	AS SHOWN	UNLESS OTHERWISE SPECIFIED DIMENSIONS ARE IN INCHES	XX ± 0.03 XXX ± 0.01	ANGLES ± 0.5° OTHER _____	Natural Resources Canada				DWG SIZE	1	PROTOTYPE RELEASE. ECN 2731.	09SEP2013	GCH
					DWN GCH	DATE DWN 9SEP2013	CHKD	DATE	A1	REV	DESCRIPTION	DATE	CHKD

19039 - GEOPHYSICAL STATION, DC KIT

PART	DESCRIPTION	U/M	MFG NAME	MFG PART #
9000-0104	SCR HHC 1/4-20*.75"L GR 8 STL YEL ZN CHR	EA	KNAFA	CH81412
9000-0105	SCR HHC 3/8-16*1"L GR 8 YEL ZN CHR PLD	EA	KNAPP	CH83716
9000-0904	EYE BOLT, 1" ID, 3/8 UNC, W SHLDR,ZN PLD	EA	MCMASTER CARR	3014T253
9000-1058	SCR MACH #10-32*.75"L P/PH SST	EA	SPAE-NAUR	424-047
9000-1090	SCR MACH #8-32*.5"L P/BH SST	EA	SPAE-NAUR	MS-2370P
9000-1116	ZSCR MACH #6-32*.25"L P/BH SST	EA	SPAE-NAUR	MPP0604S1
9000-9002	STUD, SELF-CLINCH 1/4-20*.75"L SST	EA	PEM/SPAE-NAUR	FHS-0420-12/614-836
9001-0037	NUT 1/4-20 HEX SST 18-8	EA	SPAE NAUR	HN-2010
9001-1022	NUT #10-32 NYLOK HEX SST	EA	SPAE-NAUR	179-003
9001-1042	NUT 3/8-16 NYLOK HEX GR8 YEL ZN CHR PLD	EA	KNAPP	NS837
9001-5042	NUT 1/4-20 SELF-CLINCH SST	EA	PEM/INTERFAST	CLS-0420-2
9001-5047	NUT #8-32 SELF-CLINCH SST HDN (.056")	EA	PEM/INTERFAST	SP-832-2
9001-5049	NUT 3/8-16 SELF-CLINCH, SST(.125)	EA	PEM/INTERFAST	CLS-0616-2
9001-5050	NUT 3/8-16 SELF-CLINCH, SST(.250)	EA	PEM/INTERFAST	CLS-0616-3
9001-5051	NUT 1/4-20 SELF-CLINCH SST(.125)	EA	PEM/INTERFAST	CLS-0420-3
9002-0040	WSHR #10 FLAT SST 18-8	EA	SPAE-NAUR	W-2071
9002-0045	WSHR #8 FLAT SST 18-8	EA	SPAE-NAUR	W-2070
9002-0046	WSHR #6 FLAT SAE SST	EA	SPAE-NAUR	W-2020
9002-0066	WSHR 1/4" FLAT SAE SST	EA	SPAENAUR	658-015
9002-0073	WSHR 3/8" FLAT SAE .81"OD GR8 YEL ZN CHR	EA	KNAPP	WSAEH37ZD
9002-0074	WSHR 1/4" FLAT SAE GR8 YEL ZN CHR	EA	KNAPP	WSAEH14ZD
9002-1024	WSHR #8 LOCK SST 18-8	EA	SPAE-NAUR	667-007
9002-1026	WSHR #6 LOCK REG SST	EA	SPAE-NAUR	N 667-006
9002-1029	WSHR 1/4" LOCK SST	EA	SPAENAUR	W-2028
9002-1036	WSHR 3/8" LOCK REG GR8 YEL ZN CHR PLD	EA	KNAPP	WS837
9002-1037	WSHR 1/4" LOCK REG STL YEL ZN CHR PLD	EA	KNAPP	WS814
9002-4005	WSHR 1/4" SEALING STL/RBR	EA	SPAE NAUR	685-002
9004-1101	PIN MAXLOK TRUSS/HD 3/16"DIA STL ZN PLD	EA	AVDEL	01903-70610
9004-1102	COLLAR, MAXLOK 3/16"DIA PIN	EA	AVDEL	01981-70600
9007-6001	CABLE, COAXIAL CA195, TNC PLUG MALE 20FT	EA	AIR802	CA195-B-TNPTNP-020F
9007-6002	CABLE, COAXIAL CA195, TNC PLUG MALE 15F	EA	AIR802	CA195-B-TNPTNP-015F
9010-0017	TERM RG #10 .25"STUD INSUL	EA	PANDUIT	PV10-14R-L
9010-0018	TERM RG #10 .38"STUD INSUL	EA	PANDUIT	PV10-38R
9010-0037	TERM L-FORK #10 #8 STUD INSUL	EA	PANDUIT	PV10-8LF-L
9010-0083	FERRULE #10 NON INSULATED	EA	PANDUIT	F82-12-M
9012-0063	CONN, 2 PIN, RCPT, SNGL ROW	EA	MOLEX	42816-0212
9012-0064	CONN, 2 PIN, PLUG, SNGL ROW, PNL MNT	EA	MOLEX	42818-0212
9012-0065	TERM, CRIMP, FML, 10-12AWG, TIN	EA	MOLEX	42815-0011
9012-0066	TERM, CRIMP, MALE, 10-12AWG, TIN	EA	MOLEX	42817-0011
9014-0015	ADH, 'BLACK MAX' 1.0 OZ BOTTLE	OZ	LOCTITE	38050
9014-0017	*SEALANT, PIPE, 250ML	EA	LOCTITE	567-250ML
9019-0003	CONDUIT, FLEX, 1/2" LIQ-TITE, ARMOURED	FT	EWC	755126
9019-0029	NUT, LOCK, ELEC CONDUIT 0.75 INCH	EA	T&B	142
9019-0042	CONDUIT, FLEX, 3/4" LIQ-TITE, ARMOURED	FT	HYDROTITE/KAF-TECH	755130
9019-0057	LUG, 2BARREL,#2/0>#14AWG	EA	BURNDY	K2A25U
9019-1018	WSHR, SEALING RING 3/4"DIA METAL LIQ-TIT	EA	T&B	5263
9020-1008	ZHEAT SHK, TUBE, 1/2"ID BLACK	FT	ALPHA	FIT2211/2 BK105
9020-1016	HEAT SHK, TUBE, 1/2" ID RED	FT	ALPHA	FIT2211/2 RD105
9030-0028	SEAL, BULB RS SECT PUSH ON TRIM .09"GRIP	FT	SPAE-NAUR	825-068
9043-0029	BLOCK, DISTR, SNGL POLE, 80A, 1IN 6 OUT	EA	ERICO	569010
9045-0258	CPLG, 3/4" NPT SCH 40, AL	EA	MCMASTER CARR	44705K56
9045-0259	UNION, 3/4" NPT CLASS 150, AL	EA	MCMASTER CARR	44705K245

9045-0260	PIPE, 3/4"NPT SCH 40 AL	FT		
9045-0261	CAP, PIPE, 3/4"NPT SCH 40 ALUM	EA	MCMASTER CARR	44705K376
9045-0262	NIPPLE 3/4"NPT*CLOSE SCH 40 PIPE AL	EA	MCMASTER CARR	44665K191
9046-0046	LATCH, ROTARY ACTION, CAM, SST	EA	SOUTHCO	K5-2857-52
9046-0047	HANDLE, SURFACE MNT, FOLDING, PULL, STL	EA	MCMASTER CARR	1647A350
9074-1019	CONTROLLER, SOLAR CHARGE,12VDC, 15AMP	EA	MORNINGSTAR CORP	SUNSAVER-MPPT-15L
9085-0015	UNISTRUT ALUM CHAN 1.63*1.63" 12 GA	FT	MC MASTER-CARR	3230T66
9085-0016	PIPE CLAMP, 3/4NPT, STRUT MNT, SST	EA	MCMASTER CARR	3115T43
9088-0001	DIN RAIL, SYMMETRIC, 1.38*.29"*78"L,STL	EA	WEIDMULLER	0514500000
9088-2016	TERMINAL BLOCK,2TIER,4TERM,26TO12AWG,DIN	EA	WEIDMULLER	1041620000

AC Kit Photographs

Front View

Side View

View of Cable entry to instrument box

Interior view of instrument box (instruments and power supply not in scope of contract).

DC Kit Photographs

DC Kit Side view

DC Kit Battery Box interior

Solar panels and batteries are not in scope of contract.