-300 ACC BLACKOUT 14.5" BARREL
-STAINLESS BARREL
-1 IN 7" TWIST
-EXTENDED FEED RAMPS
-BEAD BLASTED FINISH
-GAS TUBE
-PINNED LOW PROFILE
GAS BLOCK .750"
-5/8-24 THREADS
-MEDIUM CONTOUR
-HEADSPACE GO-1.1038"
NO-GO 1.1098"

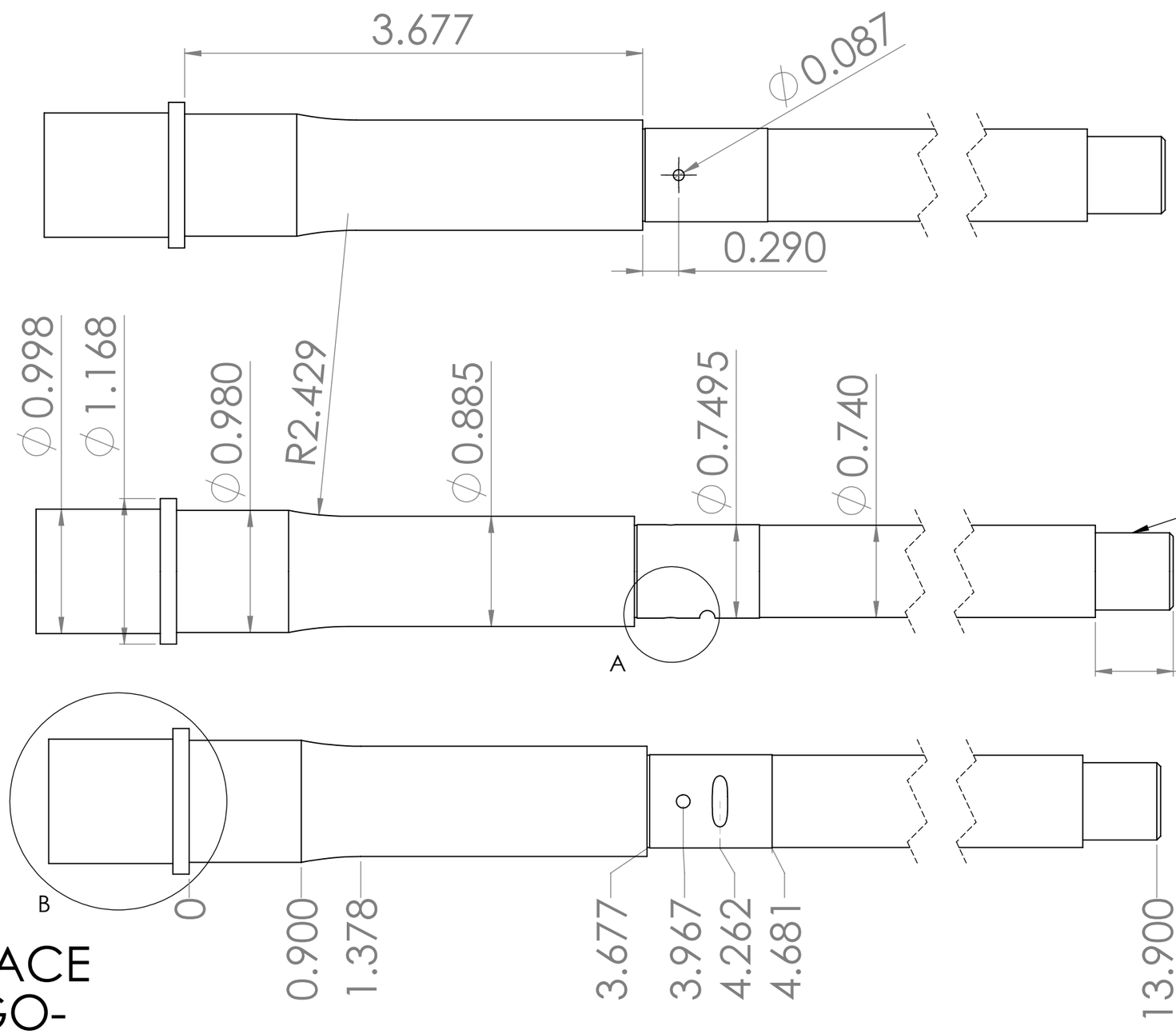

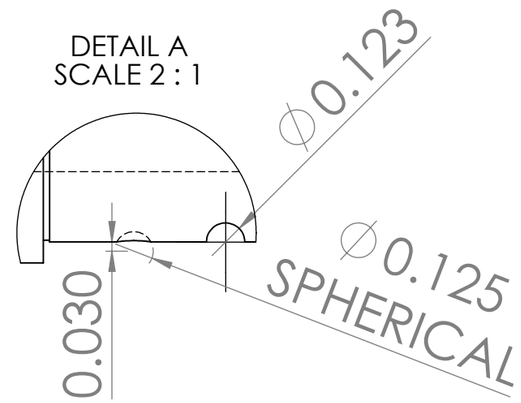

FACE
GO-
GAUGE
1.1038"

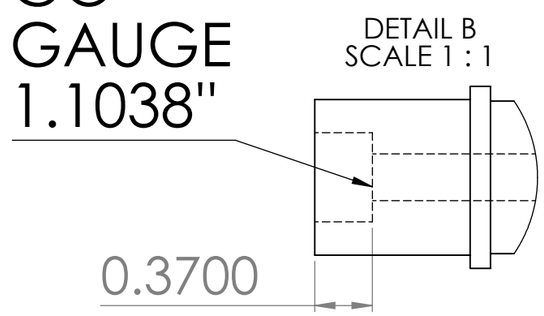

UNLESS OTHERWISE SPECIFIED: DIMENSIONS ARE IN MILLIMETERS SURFACE FINISH: TOLERANCES: LINEAR: ANGULAR:	FINISH: SCALE 1 : 1				DEBUR AND BREAK SHARP EDGES	DO NOT SCALE DRAWING / REVISION
	NAME	SIGNATURE	DATE			TITLE: RCMP-GRC
DRAWN						
CHK'D						
APPV'D						
MFG						
Q.A				MATERIAL:		DWG NO. 300blk barrel 14.5 LENGTH — A3
				WEIGHT:		SCALE:1:2 — SHEET 1 OF 1