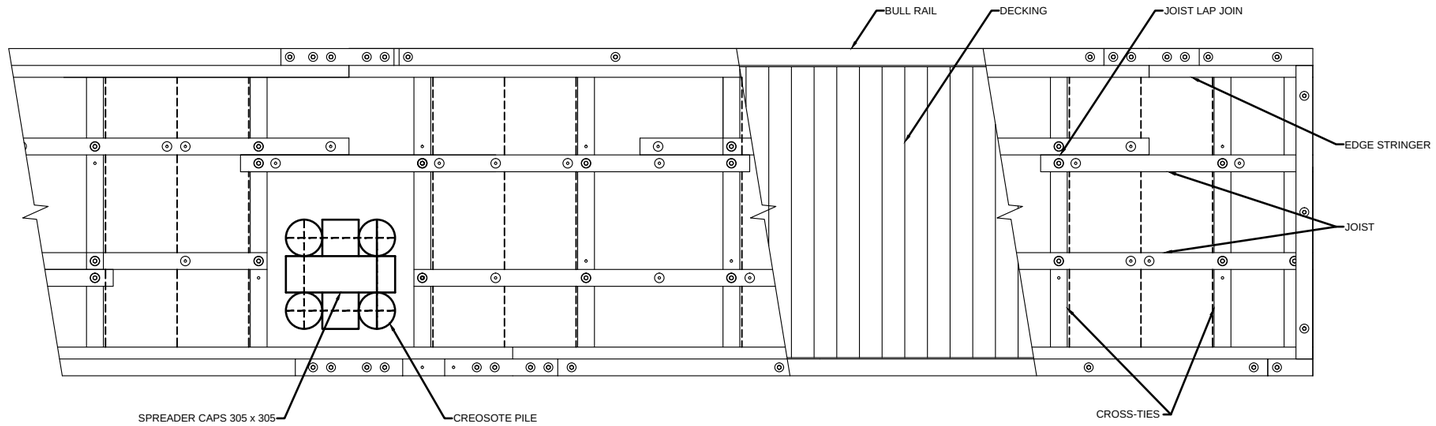

TYPICAL EXISTING FLOAT LAYOUT
SCALE 1:50

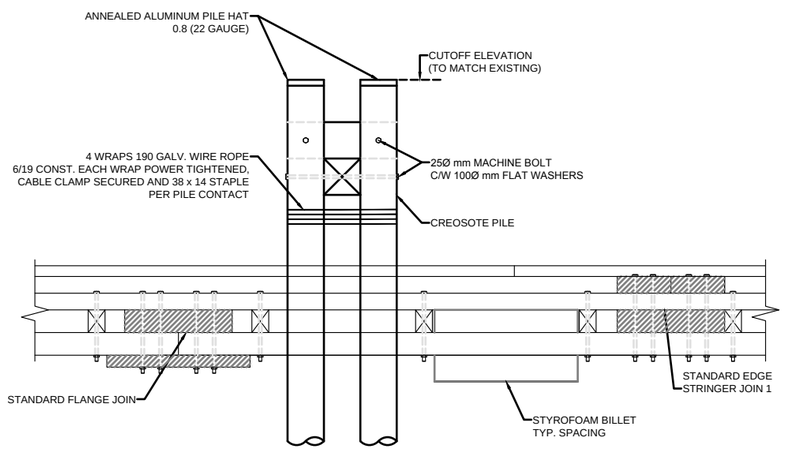

TYPICAL EXISTING FLOAT ELEVATION
SCALE 1:50

EXISTING FLANGE / EDGE STRINGER CONNECTION TYPES				
FLOAT	FLANGE JOINS	NOTES	EDGE STRINGER JOINS	NOTES
A	STANDARD		STANDARD 1	
B	STANDARD		STANDARD 1	
C	STANDARD		STANDARD 2	NO UPPER BLOCK
D	STANDARD	NO LOWER BLOCKS	STANDARD 2	NO UPPER BLOCK
E	STANDARD U-CLAMP		STANDARD U-CLAMP	
F	STANDARD U-CLAMP	NO LOWER BLOCKS	STANDARD U-CLAMP	
G	STANDARD		STANDARD 2	NO UPPER BLOCK
H	STANDARD		STANDARD 2	NO UPPER BLOCK
J	STANDARD		STANDARD 1	
K	STANDARD		STANDARD 1	
L	STANDARD U-CLAMP		STANDARD U-CLAMP	
M	STANDARD U-CLAMP		STANDARD U-CLAMP	

EXISTING FLOAT BLOCK DETAILS				
	FLANGE		EDGE STRINGER	
FLOAT	LOWER	UPPER	LOWER	UPPER
A	140 x 140	190 x 140	190 x 140	140 x 140 (RISER)
B	140 x 140	190 x 140	190 x 140	140 x 140 (RISER)
C	140 x 140	140 x 140	140 x 140	NONE
D	NONE	140 x 140	140 x 140	NONE
E	100 x 140	140 x 140	140 x 140	90 x 140
F	100 x 140	140 x 140	140 x 140	90 x 140
G	NONE	140 x 140	140 x 140	NONE
H	N/A	140 x 140	140 x 140	NONE
J	140 x 140	140 x 140	140 x 140	140 x 140 (RISER)
K	N/A	140 x 140	140 x 140	NONE
L	100 x 140	140 x 140	140 x 140	140 x 140
M	NONE	300 x 140	300 x 140	140 x 140

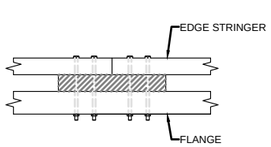

STANDARD EXISTING EDGE STRINGER JOIN 2
SCALE 1:50

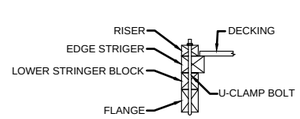

STANDARD EXISTING U-CLAMP STYLE
SCALE 1:50

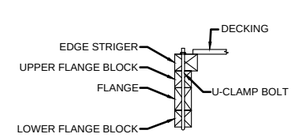

TYPICAL EXISTING FLANGE JOIN
SCALE 1:50

DRAWING NOTES:

- THE ABOVE ELEVATION PROFILE IS REPRESENTATIVE OF TYPICAL EXISTING FLOAT COMPONENTS
- EXISTING FLOAT JOIN DETAILS ARE SUMMARIZED IN THE TABLES
- PILE DOLPHIN REPRESENTATION IS TYPICAL
- PILE WELL DETAILS NOT SHOWN IN PLAN VIEW

Public Works and Government Services Canada / Travaux publics et Services gouvernementaux Canada

REAL PROPERTY SERVICES
Western Region
SERVICES IMMOBILIERS
Région de l'ouest

Revision/Révision	Description/Description	Date/Date

Client/client

Fisheries & Oceans Canada
Small Craft Harbours Branch
Pacific Division

200 - 401 Burrard Street
Vancouver, Canada, V6C 3S4

Project title/Titre du projet

BELLA COOLA
SMALL CRAFT HARBOUR
FLOAT RECONSTRUCTION

Approved by/Approuve par
M.B.

Designed by/Concept par
J.A.

Drawn by/Dessine par
WSL

PWGSC Project Manager/Administrateur de Projets TPSGC

PWGSC, Architectural and Engineering Resources Manager/ Ressources Architectural et de Bâtiment d'Ingénierie, TPSGC

Client/client

Drawing title/Titre du dessin

TYPICAL EXISTING FLOAT DETAILS

Project No./No. du projet	Sheet/Feuille	Revision no./ No Révision no.
BC-FR	003 OF	

A0 – PWGSC – ANSI B–L1 – 11X17