Public Works and Government Services Canada | Travaux publics et Services gouvernementaux Canada

RETURN BIDS TO:
RETOURNER LES SOUMISSIONS À:

Marine Machinery and Services / Machineries et services maritimes
11 Laurier St. / 11, rue Laurier
6C2, Place du Portage
Gatineau
Québec
K1A 0S5

SOLICITATION AMENDMENT
MODIFICATION DE L'INVITATION

The referenced document is hereby revised; unless otherwise indicated, all other terms and conditions of the Solicitation remain the same.

Ce document est par la présente révisé; sauf indication contraire, les modalités de l'invitation demeurent les mêmes.

Comments - Commentaires

Vendor/Firm Name and Address
Raison sociale et adresse du fournisseur/de l'entrepreneur

Issuing Office - Bureau de distribution

Marine Machinery and Services / Machineries et services maritimes
11 Laurier St. / 11, rue Laurier
6C2, Place du Portage
Gatineau
Québec
K1A 0S5

Title - Sujet PROPULSION GENERATORS REPLACEMENT	
Solicitation No. - N° de l'invitation F7049-160220/B	**Amendment No. - N° modif.** 001
Client Reference No. - N° de référence du client F7049-160220	**Date** 2016-10-25
GETS Reference No. - N° de référence de SEAG PW-$$ML-044-26020	
File No. - N° de dossier 044ml.F7049-160220	**CCC No./N° CCC - FMS No./N° VME**
Solicitation Closes - L'invitation prend fin **at - à 02:00 PM** **on - le 2016-11-23**	**Time Zone** **Fuseau horaire** Eastern Standard Time EST
F.O.B. - F.A.B. **Plant-Usine:** ☐ **Destination:** ☐ **Other-Autre:** ☐	
Address Enquiries to: - Adresser toutes questions à: Aussant, Marc	**Buyer Id - Id de l'acheteur** 044ml
Telephone No. - N° de téléphone (819) 420-2906 ( )	**FAX No. - N° de FAX** (613) 889-4254
Destination - of Goods, Services, and Construction: **Destination - des biens, services et construction:**	

Instructions: See Herein

Instructions: Voir aux présentes

Delivery Required - Livraison exigée	**Delivery Offered - Livraison proposée**
Vendor/Firm Name and Address **Raison sociale et adresse du fournisseur/de l'entrepreneur** **Telephone No. - N° de téléphone** **Facsimile No. - N° de télécopieur**	
Name and title of person authorized to sign on behalf of Vendor/Firm (type or print) **Nom et titre de la personne autorisée à signer au nom du fournisseur/ de l'entrepreneur (taper ou écrire en caractères d'imprimerie)** **Signature**	**Date**

Canada

The amendment no. 1 to the Letter of Interest (LOI) and Qualification is issued to:

1- Publish the Letter of Interest and Qualification terms and conditions; and

2- Publish the LOI Statement of Work.

La modification no.1 de la Lettre d'Intérêt (LI) et Qualification est émise pour:

1- Publier les termes et conditions de la Lettre d'Intérêt et Qualification; et

2- Publier l'Énoncé des Travaux de la LI.

Please note that this is not a solicitation and no contract will result from this Letter of Interest – Pre-Qualification.

Letter of Interest (LOI) - Pre-Qualification

For the

Replacement of the Propulsion Generator Sets (PG Sets)

Onboard the

CLASS 1100 High Endurance Multi Tasked Vessels (HEMTVs)

For the

Canadian Coast Guard (CCG)

Purpose

The purpose of this Letter of Interest (LOI) - Pre-Qualification is to determine Industry's interest and to qualify suppliers for the replacement of the Propulsion Generator Sets (PG Sets), three (3) per, fitted onboard the six (6) Class 1100 CCGS High Endurance Multi Tasked Vessels (HEMTVs); Ann Harvey and George R Pearkes have their home port in St-Johns, NL, Edward Cornwallis and Sir William Alexander have their home port in Dartmouth, NS, Sir Wilfrid Laurier has her home port in Victoria, BC, and Martha L Black has her home port in Québec, QC. The replacement of the PG Sets shall be accomplished by customization of Commercial Off The Shelf (COTS) or by design, integration, design qualification test, installation, set to work (STW), training, integrated logistics support (ILS) and documentation.

The intent is to place an initial order for the CCGS Ann Harvey with options for the remaining five (5) HEMTVs.

The attached Statement of Works (SOWs) at Annex 'A' details the replacement of the PG Sets.

Requested Information, Interested Supplier's Capability and Qualification

The interested Supplier must demonstrate to Canada's satisfaction that he meet the following mandatory evaluation criteria in order to qualify for the Phase II, Request for Proposal (RFP):

1. Proposed PG Sets Replacement:

1.1 Each proposed diesel engine shall be rated at 2200kW and be coupled to a synchronous generator rated at 2100kW;

1.2 The proposed PG Sets must utilize medium speed diesel engines, with medium speed being defined for these purposes as either 600, 720 or 900 rpm in order to produce the 60 Hz required by the electrical distribution system;

1.3 Each proposed diesel engine must meet IMO Tier II engine certification as per MARPOL Annex VI and the Vessel Pollution and Dangerous Chemicals Regulations;

1.4 Each proposed diesel engine must have a current Engine International Air Pollution Prevention (EIAPP) Certificate, and be supplied with an approved Technical File in accordance with the NOx Technical Code, 2008;

1.5 The proposed PG Sets must be approved for the intended purpose by one (1) of the Classification Societies recognized by TCMS. The PG Sets must be approved for marine use as a complete unit of the diesel prime mover and the AC electric alternator;

1.6 The replacement generators rotors must be of a fully supported two bearing design;

1.7 The interested Supplier must provide a detailed description and function of the project in a document which clearly outlines and demonstrates the functionalities of the system delivered including but not limited to, a full description of the system, components supplied and interaction with other systems.

2. Capacity in specification writing:

The interested Supplier must demonstrate to Canada's satisfaction that he has capability in specification writing for: system design, manufacturing, system integration, vessel installation and set-to-work of marine service PG Sets.

3. Quality Assurance:

In the performance of the Work described herein, interested Suppliers shall comply with the requirements of:

3.1 ISO 9001-2000 – Quality Management Systems – Requirements, published by the International Organization for Standardization (ISO), current edition at closing date of LOI; and

3.2 It is not the intent to require that the interested Supplier be registered to the applicable standard; however, interested Supplier's quality management system must address each requirement contained in the standard.

4. Rough Order of Magnitude (ROM) Price:

4.1 Provide a Rough Order of Magnitude (ROM) price estimate in Canadian currency for:

- Initial quantity of three (3) plus five (5) option of three (3) Gen Sets; and
- One (1) order for eighteen (18) Gen Sets.

4.2 Provide a breakdown of the ROM price structure per PG Sets as well as spare parts, special purpose tools and test equipment (SPTATE), Engineering Change (EC) development, FAT, etc.

Delivery Schedule

The following is a tentative delivery schedule:

Ship	Delivery
CCGS Ann Harvey	Oct. 1, 2017
CCGS George R Pearkes	Feb. 1, 2019
CCGS Edward Cornwallis	Sept. 1, 2019
CCGS Sir Wilfrid Laurier	Nov. 1, 2019
CCGS Sir William Alexander	Apr. 1, 2020
CCGS Martha L Black	Nov. 1, 2020

The interested Supplier must confirm if they can meet the delivery schedule and they must demonstrate how they will meet the CCGS Ann Harvey delivery.

Communications

All communications during this requirement period shall be directed to Marc Aussant Contracting Authority, via email at Marc Aussant@pwgsc.gc.ca to ensure fair and transparent treatment of all Interested Suppliers.

Submission of Responses

Companies must submit their written response to this Letter of Interest (LOI) - Pre-Qualification directly to:

Public Works and Government Services Canada
Marine Systems, ML Division
Place du Portage, Phase III, 6C2
11 Laurier Street
Gatineau, Québec K1A 0S5
Attention: Marc Aussant
Email: Marc Aussant@pwgsc.gc.ca
Phone: (819) 420-2906
Fax: (819) 956-0897

The written response shall be submitted in the quantities specified below:

Volume	Title	Hard Copy Quantity per Item
1	**Technical:** - Item 1: Proposed PG Sets Replacement - Item 2: Capacity in specification writing - Item 3: Quality Assurance	3
2	**Financial and Delivery Schedule:** - Item 4: Rough Order of Magnitude Price - Delivery Schedule	1

Evaluation of Interested Supplier's Deliverables

It is the sole responsibility of interested Supplier to provide sufficient information to adequately assess its Deliverables. Only interested Suppliers who provided information to Canada's satisfaction will receive the Bid Package for Phase II (RFP).

Interested Supplier must comply with the requirements of this Letter of Interest (LOI) - Pre-Qualification and meet all mandatory evaluation criteria to be declared responsive.

Following the response of the interested Supplier, Canada may request clarification and/or demonstration of the proposed system.

Should an interested Supplier be of the opinion that some issues are not addressed above, that interested Supplier is encouraged to provide additional information. This information may be used during Phase II (RFP) of the project.

Any and all expenses incurred by a potential supplier in pursuing this opportunity including the provision of information, clarification, presentation to Canada and any visits are at the supplier's sole risk and expense.

Please note that this is not a solicitation and no contract will result from this Letter of Interest – Pre-Qualification.

Letter of Interest (LOI) - Pre-Qualification

For the

Replacement of the Propulsion Generator Sets (PG Sets)

Onboard the

CLASS 1100 High Endurance Multi Tasked Vessels (HEMTVs)

For the

Canadian Coast Guard (CCG)

Purpose

The purpose of this Letter of Interest (LOI) - Pre-Qualification is to determine Industry's interest and to qualify suppliers for the replacement of the Propulsion Generator Sets (PG Sets), three (3) per, fitted onboard the six (6) Class 1100 CCGS High Endurance Multi Tasked Vessels (HEMTVs); Ann Harvey and George R Pearkes have their home port in St-Johns, NL, Edward Cornwallis and Sir William Alexander have their home port in Dartmouth, NS, Sir Wilfrid Laurier has her home port in Victoria, BC, and Martha L Black has her home port in Québec, QC. The replacement of the PG Sets shall be accomplished by customization of Commercial Off The Shelf (COTS) or by design, integration, design qualification test, installation, set to work (STW), training, integrated logistics support (ILS) and documentation.

The intent is to place an initial order for the CCGS Ann Harvey with options for the remaining five (5) HEMTVs.

The attached Statement of Works (SOWs) at Annex 'A' details the replacement of the PG Sets.

Requested Information, Interested Supplier's Capability and Qualification

The interested Supplier must demonstrate to Canada's satisfaction that he meet the following mandatory evaluation criteria in order to qualify for the Phase II, Request for Proposal (RFP):

1. Proposed PG Sets Replacement:

1.1 Each proposed diesel engine shall be rated at 2200kW and be coupled to a synchronous generator rated at 2100kW;

1.2 The proposed PG Sets must utilize medium speed diesel engines, with medium speed being defined for these purposes as either 600, 720 or 900 rpm in order to produce the 60 Hz required by the electrical distribution system;

1.3 Each proposed diesel engine must meet IMO Tier II engine certification as per MARPOL Annex VI and the Vessel Pollution and Dangerous Chemicals Regulations;

1.4 Each proposed diesel engine must have a current Engine International Air Pollution Prevention (EIAPP) Certificate, and be supplied with an approved Technical File in accordance with the NOx Technical Code, 2008;

1.5 The proposed PG Sets must be approved for the intended purpose by one (1) of the Classification Societies recognized by TCMS. The PG Sets must be approved for marine use as a complete unit of the diesel prime mover and the AC electric alternator;

1.6 The replacement generators rotors must be of a fully supported two bearing design;

1.7 The interested Supplier must provide a detailed description and function of the project in a document which clearly outlines and demonstrates the functionalities of the system delivered including but not limited to, a full description of the system, components supplied and interaction with other systems.

2. Capacity in specification writing:

The interested Supplier must demonstrate to Canada's satisfaction that he has capability in specification writing for: system design, manufacturing, system integration, vessel installation and set-to-work of marine service PG Sets.

3. Quality Assurance:

In the performance of the Work described herein, interested Suppliers shall comply with the requirements of:

3.1 ISO 9001-2000 – Quality Management Systems – Requirements, published by the International Organization for Standardization (ISO), current edition at closing date of LOI; and

3.2 It is not the intent to require that the interested Supplier be registered to the applicable standard; however, interested Supplier's quality management system must address each requirement contained in the standard.

4. Rough Order of Magnitude (ROM) Price:

4.1 Provide a Rough Order of Magnitude (ROM) price estimate in Canadian currency for:

- Initial quantity of three (3) plus five (5) option of three (3) Gen Sets; and
- One (1) order for eighteen (18) Gen Sets.

4.2 Provide a breakdown of the ROM price structure per PG Sets as well as spare parts, special purpose tools and test equipment (SPTATE), Engineering Change (EC) development, FAT, etc.

Delivery Schedule

The following is a tentative delivery schedule:

Ship	Delivery
CCGS Ann Harvey	Oct. 1, 2017
CCGS George R Pearkes	Feb. 1, 2019
CCGS Edward Cornwallis	Sept. 1, 2019
CCGS Sir Wilfrid Laurier	Nov. 1, 2019
CCGS Sir William Alexander	Apr. 1, 2020
CCGS Martha L Black	Nov. 1, 2020

The interested Supplier must confirm if they can meet the delivery schedule and they must demonstrate how they will meet the CCGS Ann Harvey delivery.

Communications

All communications during this requirement period shall be directed to Marc Aussant Contracting Authority, via email at Marc Aussant@pwgsc.gc.ca to ensure fair and transparent treatment of all Interested Suppliers.

Submission of Responses

Companies must submit their written response to this Letter of Interest (LOI) - Pre-Qualification directly to:

Public Works and Government Services Canada
Marine Systems, ML Division
Place du Portage, Phase III, 6C2
11 Laurier Street
Gatineau, Québec K1A 0S5
Attention: Marc Aussant
Email: Marc Aussant@pwgsc.gc.ca
Phone: (819) 420-2906
Fax: (819) 956-0897

The written response shall be submitted in the quantities specified below:

Volume	Title	Hard Copy Quantity per Item
1	**Technical:** - Item 1: Proposed PG Sets Replacement - Item 2: Capacity in specification writing - Item 3: Quality Assurance	3
2	**Financial and Delivery Schedule:** - Item 4: Rough Order of Magnitude Price - Delivery Schedule	1

Evaluation of Interested Supplier's Deliverables

It is the sole responsibility of interested Supplier to provide sufficient information to adequately assess its Deliverables. Only interested Suppliers who provided information to Canada's satisfaction will receive the Bid Package for Phase II (RFP).

Interested Supplier must comply with the requirements of this Letter of Interest (LOI) - Pre-Qualification and meet all mandatory evaluation criteria to be declared responsive.

Following the response of the interested Supplier, Canada may request clarification and/or demonstration of the proposed system.

Should an interested Supplier be of the opinion that some issues are not addressed above, that interested Supplier is encouraged to provide additional information. This information may be used during Phase II (RFP) of the project.

Any and all expenses incurred by a potential supplier in pursuing this opportunity including the provision of information, clarification, presentation to Canada and any visits are at the supplier's sole risk and expense.

ANNEX A

LOI STATEMENT OF WORK (SOW)

FOR THE

PROCUREMENT

OF THE

PROPULSION GENERATOR SETS WITH ASSOCIATED ENGINEERING CHANGES (EC), INTEGRATION AND INSTALLATION PACKAGES

FOR THE

CANADIAN COAST GUARD HIGH ENDURANCE MULTI-TASKED VESSELS (HEMTV)

Prepared by Marine Engineering
VLE Program
50 Discovery Drive
Dartmouth, NS

Table of Contents

1 Scope

1.1 Purpose

This Statement of Work (SOW) defines the technical and performance requirements for a new Class approved Propulsion Generator Sets (PG Sets), to be procured to replace the existing Propulsion Generator Sets installed onboard the CCGS Ann Harvey with options for the remaining five (5) High Endurance Multi Tasked Vessels (HEMTVs), and for the required Engineering Changes (EC) to the new PG Sets and to the vessel for the Integration and Installation on board.

The removal of the existing Propulsion Generator Sets and all related equipment as well as the Integration and Installation of the new PG Sets will be achieved under the Vessel Life Extension (VLE) contracts for each vessel. The Contractor of the PG Sets will be identified as the PG Sets OEM Contractor under the VLE contracts.

The PG Set replacements must be accomplished by the use of Class approved Marine components and/or by design, integration, design qualification tests, training, Integrated Logistics Support (ILS) and documentation.

The new PG Sets with its Integration and Installation packages will be purchased under the actual contract. The Design and Manufacturing of the PG Sets, its related equipment and components, the vessel's integration, the vessel's modifications and the complete installations, Set to Work, Tests and Trials must be in accordance with applicable rules and regulations of a Canada's recognized Classification Society (CS) and Transport Canada Marine Safety. Therefore, all necessary surveys, inspections, assessments, calculations, designs, drawings, certification, approval and associated SOW required to develop the PG Sets Engineering Change (EC) for the vessel's integration and installation specifications and drawings must be done by a certified Naval Architect and /or Engineer employed or subcontracted by the Contractor.

The Contractor must retain the Total System Responsibility for the new PG Sets system design and manufacturing with its related equipment and components. The contractor must also retain the Total System Responsibility for the new PG Sets with its related equipment and components, the integration to the vessel's structure and various vessel's components and systems, the vessel's modifications and the installation of the new PG Sets with all of its related equipment and components onboard the vessel.

Following the strip out of the existing Propulsion Generator Sets, components and equipment, the Contractor must provide a Field Service Representative (FSR) to determine that the dismantling and the strip out were sufficient to allow the Integration and Installation packages. During the Installation, Set to Work (STW), Testing, Commissioning and Trials, the Contractor must provide, as applicable, the services of an FSR and/or a Naval Architect.

1.2 Background

The High Endurance, Multi Tasked Vessels (HEMTV) are operated by the Canadian Coast Guard year round performing Search and Rescue, Buoy Tending and Ice Breaking operations.

The Propulsion Generator (PG) Sets are original equipment installed on the ships when they were built in the late 1980's, and have exceeded their operational life.

1.3 Objectives of the PG Set Procurement

The fundamental objectives of the PG Set procurement are to:

1. Maintain the vessel's propulsion capability, this for a period of at least Fifteen (15) years;
2. Sustain the existing functions of the PG Sets by replacing the PG Sets with modern, fully supportable technology within the same space envelope currently used by the PG Sets;
3. Supply new Class approved Marine PG Sets that will eventually replace the existing PG Sets. All of its components must be new and of modern design;
4. Supply new PG Sets that will be approved and certified by one (1) of the Transport Canada recognized Classification Societies (CS) in Canada for its intended purpose onboard the CCGS Ann Harvey;
5. Supply the new PG Sets EC and installation package that will be developed in accordance with the CS rules and regulations and approved by the CS and TCMS;
6. Use the vessel existing electrical power supplies;
7. Use to the greatest extent the vessel existing mechanical components and available structure;
8. Fit inside the existing space envelope currently used by the existing PG Sets; and
9. Not exceed the weight of the existing PG Sets.

1.4 Acronyms and Abbreviations

For acronyms and abbreviations, refer to section 10.

2 Applicable Documents

The prescribed versions of the following documents are to form a part of this specification to the extent specified herein.

2.1 Government Documents

Table 1: List of Government Documents

Item	Document Number	Title
Common Documents		
1	MECTS-#2860606-v1	CCG National CAD Standard
2	EKME#3049715v3A	CCG Welding Specification
3	18-080-000-SG-003	CCG Paints and Coatings Standard
4	70-000-000-EU-JA-001	CCG Spec for Installation of Shipboard Elec. Eq.
5	462-1-2	Alco Gen Set Data Sheet
6	9280-250-200	GE Generator Data Sheet
7	C30-037254	Bombardier 16-251 Genset Lifting Drawing
8	C34-037311	Bombardier Engine Control Panel
9	C34-037316	Bombardier Wiring Schematic
10	C34-037482	Bombardier Control Panel Assembly
11	C98-037085	Bombardier Skid Proposal
12	9440500990-D	Basler DECS250N Instruction Manual
13	R0186246	Liquidewt MSDS
14	R0185096	Maxigard MSDS
CCGS Ann Harvey Documents		
15	72-01-02	Const Dwg Mid Body Fr 58 to 104
16	72-13	Double Bottom Unit 101
17	72-301-1	General Arrangement Profile End Views
18	72-301-2	General Arrangement Upper Decks
19	72-301-3	General Arrangement Lower Decks
20	72-38-01	Aux Seats Gen Room
21	72-38-02	Aux Seats Gen Room 2
22	72-39-01	Aux Seats on Tank Top
23	72-39-02	Aux Seats on Tank Top
24	72-401	Lines Plan
25	72-402	Hydrostatic Curves
26	72-403	Cross Curves of Stability
27	72-405	Capacity Plan showing Tank Contents
28	72-408	Hydrostatic Curves Vsl on Ice Shelf
29	72-501-01	Mach Arr Generator Room
30	72-501-02	Mach Arr Motor Room
31	72-501-02-2	Mach Arr Motor Room
32	72-501-03	Mach Arr ER Flat
33	72-501-04	Mach Arr Upper Decks
34	72-501-05	Mach Arr Elev to Port

Item	Document Number	Title
35	72-501-06	Mach Arr Stack
36	72-501-07	Mach Arr Elev Motor Room
37	72-501-08	Mach Arr Elev Fr96
38	72-501-09	Mach Arr Elev Fr85
39	72-501-10	Mach Arr Elev Fr69
40	72-511-01	Exhaust Piping Plan
41	72-511-02	Exhaust Piping Elev Port
42	72-511-03	Exhaust Piping Elev Stbd
43	72-511-04	Exhaust Piping Sections
44	72-511-05	Exhaust Piping Plans
45	72-511-06	Exhaust Piping Details
46	72-511-07	Exhaust Piping Anchor Details
47	72-511-08	Exhaust Piping Anchor Details
48	72-551-01	Shafting Arr
49	72-556-01	Prop Gen Rm Ventilation
50	72-556-02	Prop Gen Rm Ventilation
51	72-556-03	Eng Spaces Ventilation
52	72-556-04	Casing Ventilation
53	72-556-07	Ventilation Details
54	72-556-08	Ventilation Details
55	72-753-01	Fuel Oil Service Dia
56	72-755-01	Central Cooling Dia
57	72-757-01	Lub Oil Dia
58	72-758-01	Compressed Air Dia
59	72-801-1	Power Schem Main Power Swbd
60		Ann Harvey - Stability Book
CCGS Edward Cornwallis Documents		
61	VNDB2 112-03-4	Tank Top & Double Bottom Fr 70 to 106
62	VNDB2 112-05-2	Web Frames 76 to 121
63	VNDB2 218-01-1	Seats for Generators
64	VNDB2 229-10-1	Eng Rm Ventilation Mech + Nat Exhaust
65	VNDB2 229-10-10	Eng Rm Ventilation Material List
66	VNDB2 229-10-11	Eng Rm Ventilation Material List
67	VNDB2 229-10-2	Eng Rm Ventilation Sealevel Fr 70 to 106
68	VNDB2 229-10-3	Eng Rm Ventilation Sealevel Fr 60 to 106
69	VNDB2 229-10-4	Eng Rm Ventilation Main Dk Up
70	VNDB2 229-10-5	Eng Rm Ventilation Eng Rm Flat Fr 59 to 106
71	VNDB2 229-10-6	Eng Rm Ventilation Tk Top Fr 70 to 106
72	VNDB2 229-10-7	Eng Rm Ventilation Fr 85 Fwd
73	VNDB2 229-10-8	Eng Rm Ventilation Material List
74	VNDB2 229-10-9	Eng Rm Ventilation Material List
75	VNDB2 232-13-1	Heating Coils
76	VNDB2 352-04-61	Port ME Pre LO Pump
77	VNDB2 352-04-62	Stbd ME Pre LO Pump

Item	Document Number	Title
78	VNDB2 352-04-63	Centre ME Pre LO Pump
79	VNDB2 358-08	Propulsion System Tank Top Fr 70 to 126
80	VNDB2 358-09-1	Propulsion System Cabling Dia
81	VNDB2 358-09-2	Propulsion System Cabling Dia
82	VNDB2 358-10-17	Main Swbd Transformer Rm ER Flat
83	VNDB2 358-10-18	Main Swbd Transformer Rm ER Flat
84	VNDB2 358-10-19	Main Swbd Transformer Rm ER Flat
85	VNDB2 358-10-21	Port Centre & Stbd Main Generators
86	VNDB2 358-10-22	24 VDC Junc Box & AC Box on Engines
87	VNDB2 358-10-23	Heaters Control Panels
88	VNDB2 358-10-24	Port Main Engine Control Panels
89	VNDB2 358-10-25	Centre Main Engine Control Panels
90	VNDB2 358-10-26	Stbd Main Engine Control Panels
91	VNDB2 358-10-27	MSCC Sect 3 TB3
92	VNDB2 358-10-28	MSCC Sect 3 TB3
93	VNDB2 358-10-29	MSCC Sect 4 TB4
94	VNDB2 358-10-31	MSCC Sect 3 & 4
95	VNDB2 460-01-1	Machinery Arr
96	VNDB2 460-01-2	Machinery Arr
97	VNDB2 460-10	Chocks & Bolts for Main Generators
98	VNDB2 465-01	Central Cooling Water System Dia
99	VNDB2 465-07	Fuel Oil Service Dia
100	VNDB2 465-08	Lub Oil System Dia
101	VNDB2 465-09	Compressed Air System Dia
102	VNDB2 465-22-1	Exhaust System (Plan View - Platform)
103	VNDB2 465-22-2	Exhaust System (Plan Views - Casing)
104	VNDB2 465-22-3	Exhaust System (Elev Lkg to Port)
105	VNDB2 465-22-4	Exhaust System (Elev Lkg to Stbd)
106	VNDB2 465-22-6	Exhaust System (Section at Fr 84 Aft)
107	VNDB2 465-22-7	Exhaust System (Funnel)
108	VNDB2 465-22-8	Exhaust System (Material List)
109	VNDB2 977-80-1	Engine Room
110	VNDB2 977-80-10	Engine Rm Section at Fr 94
111	VNDB2 977-80-11	Engine Rm Section at Fr 100 Lkg Aft
112	VNDB2 977-80-2	Engine Rm Plan View at Floor Plate
113	VNDB2 977-80-4	Engine Rm Elev Port Side
114	VNDB2 977-80-5	Engine Rm Elev Stbd Side
115	VNDB2 977-80-6	Engine Rm Section at Fr 70 Lkg Aft
116	VNDB2 977-80-7	Engine Rm Section at Fr 76 Lkg Aft
117	VNDB2 977-80-8	Engine Rm Section at Fr 82 Lkg Aft
118	VNDB2 977-80-9	Engine Rm Section at Fr 88 Lkg Aft
119	VNDB2 978-01-1	GA Profile, Bow, Aft View
120	VNDB2 978-01-2	GA Main, ER Flat Tank Top Dks
121	VNDB2 978-01-3	GA WH Top, Bridge, Boat, Upper, Foscle Dks
122	VNDB2 M7066A-9-A1	Main Power Swbd Schem Gen 1

Item	Document Number	Title
123	VNDB2 M7066A-11-A1	Main Power Swbd Schem Gen 2
124	VNDB2 M7066A-12-A1	Main Power Swbd Schem Gen 3
125	VNDB2 M70874A1	Heaters Control Panels - Main Engine
126		CCGS Cornwallis Trim and Stability Book

Note: The drawings are supplied for the CCGS Ann Harvey as the intended first vessel to receive the new PG Sets. The drawings for the CCGS Edward Cornwallis are supplied to give the Contractor guidance on the amount of variation to the layout of the vessels, and the differences between vessels with an additional deck compared to ones without. It will be incumbent on the Contractor to visit each vessel upon which options are exercised to confirm measurements, arrangements, and configurations. The Coast Guard will supply drawings for each additional vessel that options are exercised for.

2.2 Non-Government Documents

Where Standards are referenced in this document, the whole standard must not apply unless specifically directed. The reference will indicate the tailoring required by the Technical Authority. If no tailoring is specified, then the Contractor must specify the extent of compliance to the referenced standard in his proposal. If any referenced standard or regulation of Table 2 has been superseded by a new revision, has become obsolete and it has been replaced by a new standard, or it has not been replaced, then the Contractor must use the latest revision or replaced standard or an equivalent standard respectively.

Table 2: List of Non-Government Documents

Item	Standard or Regulation	Title
1.	CSA W47.1 1983	Canadian Welding Bureau Standards for the fusion welding of steel
2.	CSA W47.2-M1987(R1998)	Canadian Welding Bureau Standard for the fusion welding of aluminum and aluminum alloys
3.	IEEE 45	Recommended Practice for Electric Installations on Shipboard
4.	IEC 60092-504	Electrical Installations in Ships – Part 504: Special Features – Control and Instrumentation
5.	CSA C22.1	98 Canadian Electrical Code Standard Part I Safety Standard for Electrical Installations
6.	CSA C22.2 No. 0-10	General Requirements – Canadian Electrical Code Part II
7.	ULC –S102.4-1987(R1998)	Underwriters Laboratory of Canada Standard for Test for Fire and Smoke Characteristics of Electrical Wiring and Cable
8.	DGTE-69 (70-000-000-EU-JA-001)	Specification for the Installation of Shipboard Electronic Equipment
9.	IEC 60533	Electrical and Electronic Installations in Ships – Electromagnetic compatibility
10.	ISO 2412:1982	Shipbuilding – Colours of indicator lights
11.	ISO 9001:2008	Quality Management Systems – Requirements
12.	ISO 12944	Corrosion Protection of steel structures by protective paint systems
13.	MOSH	Maritime Occupational Health and Safety Regulations (MOSH)
14.	SOLAS	International Convention for the Safety of Life at Sea (SOLAS), and the Canadian Supplement to the SOLAS Convention

Item	Standard or Regulation	Title
15	Classification Society Rules	Rules of a recognized Classification Society as identified under the Delegated Statutory Inspection Program (DSIP) e.g. Lloyd's Register Part 5 (Main and Auxiliary Machinery), Lloyd's Register Part 6 (Control and Electrical); Lloyd's Register's Rules for the Manufacture, Testing and Certification of Materials
16.	Canada Shipping Act 2001	Canada Shipping Act 2001 and subsequent regulations pertaining to a ship having general particulars as specified under Section 5.4 of this specification
17.	Transport Canada TP 127E	Transport Canada TP 127E Ships Electrical Standards
18.	MIL-STD-1521B	Technical Reviews and Audits for Systems / Equipment
19.	PMBOK Guide – 5th Edition	Work Breakdown Structure
20.	ANSI-649B: 2011	Configuration Management Plan
21.	IEC 60300-3-12:2011	Dependability Management – Application Guide – Integrated Logistic Support
22.	IACS Recommendation 71	Guide for the Development of Shipboard Technical Manuals
23.	IACS Unified Procedure 31	Inclining Test Unified Procedure
24.	Canada OHS Regulations	Part XIV – Materials Handling
25.	ASTM F1321-14	Standard Guide for Conducting a Stability Test

2.3 Order of Precedence

In the event of a conflict between the contents of this document and the applicable portions of the referenced technical documents, the contractor must inform the Technical Authority (TA) of the differences and request for a resolution.

3 Propulsion Generator Sets (PG Sets) Delivery

3.1 General

In order to satisfy the requirements of this SOW, the Contractor must;

- Procure/design, customize, manufacture, integrate, test, deliver a Factory Acceptance Test and deliver a CS and TCMS certified and approved PG Sets c/w its detailed Set to Work, Commissioning, Test and Trial Plan;

- Develop and deliver CS/TCMS certified and approved PG Sets and vessel Engineering Change (EC) Integration Packages;

- Develop and deliver CS/TCMS certified and approved PG Sets Installation Packages; and

- Ensure all PG Set components are preserved, packaged and protected for shipment and storage prior to installation.

3.1.1 Project Management Services

The Contractor must provide Project Management Services as detailed in section 4.

3.1.2 Design Engineering Services

The design engineering must be IAW with this SOW.

3.2 Deliverables

The Contractor must produce and deliver three (3) PG Sets per vessel IAW Table 3, one (1) set of PG Sets EC specifications and installation specifications IAW sections 3.3 and 3.4, one (1) set of Special Purpose Tools (SPT) IAW Table 4, One (1) set of Spare parts IAW Table 5, One (1) set of Certification IAW Table 6 and One (1) set of Documentation IAW Table 7.

Table 3: List PG Sets components per Vessel Set

Item	Component	Qty	Locations and or Comments
1	PG Set with its associated components including cables and all the necessary hardware, equipment and vessel's connection mouting/bedding	3	IAW section 6
2	Cadre Training	1	IAW sections 3.11, 8.3 and CDRL Item CDRL-LOG-01 and DID-LOG-01.

Table 4: Special Purpose Tools

Item	Installation Support	Qty	Comments
1	Special Purpose Tools (SPT)	1	For the maintenance of the PG Sets and its related equipment and components, if not readily available, the TA must approve before the contractor starts the design and/or manufacturing, IAW section 8.2.4.

Table 5: Spares Parts

Item	Title	Qty	Comments
1	Spares Parts	3	IAW section 8.2.3, Spares Component types and quantities set for the PG Sets must be proposed by the Contractor and approved by Technical Authority (TA). The quantities must be able to meet the first Five (5) years of the OEM maintenance schedule and as a minimum it must include the components listed in the SOW section 6.3.6.

Table 6: Certification

Item	Title	Qty	Comments
1	Certification by a Classification Society that is recognized by Canada and by TCMS		1- For the new PG Sets and associated equipment: - Design at CDR; - Manufacture at the OEM Factory; - At the Factory Acceptance Test (FAT); - At the Sea Acceptance Trials (SAT). 2- For the new PG Sets Vessel's Integration EC and installation: - Design at CDR - At the Sea Acceptance Trials (SAT)

Table 7: Documentation Set

Item	Title	Qty	Comments
1	Documentation	1	As per Section **Error! Reference source not found. - Error! Reference source not found.**.

3.2.1 Coordination with the VLE Inspections and Tests Plan

In accordance with the detailed inspection point requirements included with its final Inspection and Test Plan (ITP), the Contractor provides sufficient information to allow the VLE Contractor to plan in their bid the requirement to provide, as applicable, the Field Service Representative(s) (FSR), the Class Surveyor(s) and the TCMS inspector(s) required to inspect, assess, attend, witness, ascertain, approve and certify all aspects of the KB Crane contracted work that will be accomplished during the VLE contract and the associated set to work, tests and trials.

Accordingly, the Contractor Representatives (Project Manager and FSR) with the Class Surveyor Representative(s) and the TCMS Representative(s) will have to attend the VLE contract Kick Off meeting where the integration of its ITP into the VLE contract ITP will be verified, accepted and confirmed.

Following the acceptance by the Contractor and Canada of the Contractor's ITP integration into the VLE's ITP, the needs for the FSR , Class Surveyor and TCM Inspectors will be known, planned and will be used as the basis to achieve all PG Set renewal ITP's requirements.

The costs related to the Class Surveyor(s) and TCMS Inspector(s) required to inspect, assess, attend, witness, ascertain, approve and certify all aspects of the PG Set renewal contracted Work that will be accomplished during the VLE contract and the associated set to work, tests and trials will have to be invoiced directly to the CCG at that time. The costs related to the Contractor's representative(s) required to inspect, assess, attend, witness, ascertain, approve and certify all aspects of the PG Set renewal contracted Work that will be accomplished during the VLE contract and the associated set to work, tests and trials will be included into the VLE contract.

3.3 PG Sets and Vessel's Integration EC Specifications and Drawings

The Contractor must provide baseline Engineering Change (EC) specifications and Drawings for the PG Sets and the Vessel Integration IAW CDRL Item CDRL-EN-04, DID-EN-04, CDRL-EN-05 and DID-EN-05. The baseline specifications must then be particularized to address any variations following the integration.

3.4 PG Sets and Vessel's Installation Specifications and Drawings

The Contractor must develop and deliver for approval a PG Sets and Vessel's Installation Specifications and Drawings IAW CDRL item CDRL-EN-06 and DID-EN-06.

3.5 PG Sets Factory STW Plan and Procedures

The Contractor must develop and deliver for approval a PG Sets Factory STW Plan and Procedures IAW CDRL item CDRL-AT-01 and DID-AT-01.

3.6 PG Sets FAT Plan and Procedures

The Contractor must develop and deliver for approval a PG Sets FAT Plan and Procedures IAW CDRL item CDRL-AT-02 and DID-AT-02.

3.7 PG Sets Vessel's STW Plan and Procedures

The Contractor must develop and deliver for approval a PG Sets Vessel's STW Plan and Procedures IAW CDRL item CDRL-AT-03 and DID-AT-03.

3.8 Vessel's Inclining Test (VIT) Plan and Procedures with the PG Sets installed

The Contractor must develop and deliver for approval a Vessel's Inclining Test Plan and Procedures IAW CDRL item CDRL-AT-04 and DID-AT-04.

3.9 PG Sets Dock Trial Plan (DTP) and Procedures

The Contractor must develop and deliver for approval a PG Sets Dock Trial Plan and Procedures IAW CDRL item CDRL-AT-05 and DID-AT-05.

3.10 PG Sets Sea Acceptance Trial (SAT) Plan and Procedures

The Contractor must develop and deliver for approval a PG Sets Sea Acceptance Trial Plan and Procedures IAW CDRL item CDRL-AT-06 and DID-AT-06.

3.11 PG Sets Cadre Training

The Contractor must develop and deliver for approval a PG Sets Cadre Training Agenda and Plan IAW CDRL item CDRL-LOG-01 and DID-LOG-01

3.12 System Requirements Document

The Contractor must prepare the systems requirements document IAW CDRL item CDRL-EN-01 and DID-EN-01.

3.13 Preliminary Design Documents

The Contractor must prepare the preliminary design documentation packages IAW CDRL item CDRL-EN-02 and DID-EN-02.

3.14 Critical design Documents

The Contractor must prepare the critical design documentation package IAW CDRL Item CDRL-EN-03 and DID-EN-03.

3.15 PG Sets Documentation

The contractor must deliver the PG Sets documentation IAW section 8.4 and 8.5.

3.16 Physical Configuration Audit Package

The contractor must deliver the Physical Configuration Audit Package IAW CDRL item CDRL-EN-07 and DID-EN-07.

4 Project Management

4.1 Organization

The Contractor must have a named Project Manager responsible to carry out the work required for the PG Sets production program.

4.1.1 Project Manager

The Contractor's Project Manager must have the authority to plan, direct, control and make decisions for the Contract.

4.1.2 Contractor's Point of contact

The Contractor's Project Manager must be the main point of contact with Canada.

4.2 Project Management Plan

The Contractor must prepare and deliver a Project Management Plan (PMP) IAW CDRL Item CDRL-PM-01 and DID-PM-01 to identify how the Contractor intends to fulfill the project management requirements of this SOW.

4.2.1 Work Breakdown Structure (WBS)

In order to identify the various tasks imposed by the project, define and highlight their respective relationships, the contractor must develop and implement a WBS based on the PMBOK Guide 5th Edition.

4.2.2 Configuration Management Plan

In order to ensure the consistency of the PG Sets performance, functional and physical attributes with its requirements, design, and operational information, the contractor must develop and implement a Configuration Management Plan based on ANSI-649B: 2011.

4.2.3 Integrated Logistic Support (ILS) Plan

In order to ensure that the PG Sets and associated equipment will be developed with the optimization of their supportability and functional support, the contractor must develop and implement an ILS Plan based on IEC 60300-3-12:2011 (Dependability Management – Application Guide – Integrated Logistic Support).

4.2.4 Quality Assurance (QA) Plan

The Contractor must structure the Quality Assurance Plan IAW SACC D5402C (Quality Plan) dated 2010-01-11.

4.2.5 FAT STW Plan

The Contractor must develop and implement a Factory STW Plan in accordance with section 3.5. The plan will provide detailed information on how the contractor intends to prepare and activate at the factory the PG Sets with its associated equipment in preparation to the FAT.

4.2.6 FAT Plan

The contractor must develop a FAT Plan in accordance with section 3.6 and submit it to the CCG TA acceptance prior to its implementation. The FAT Plan will provide the contractor's

methodologies to test and demonstrate at the factory that PG Sets with its associated equipment are meeting the requirements of this SOW which can be demonstrated at the factory prior to its delivery.

4.2.7 Vessel's STW Plan

The Contractor must develop and implement a Vessel's STW Plan in accordance with section 3.7. The plan will provide detailed information on how the contractor intends to prepare and activate the PG Sets with its associated equipment in preparation to the dock and sea trials.

4.2.8 Vessel's Inclining Test (VIT) Plan

The Contractor must develop and implement a Vessel's Inclining Test Plan in accordance with section 3.8. The VIT Plan will provide detailed information on how the contractor intends to prepare for and perform the VIT with the PG Sets installed.

4.2.9 DTP and SAT Plans

The Contractor must develop and implement Dock and Sea Acceptance Trial Plans in accordance with section 3.9 and 3.10. The plans will provide detailed information on how the contractor intends to demonstrate the performance of the PG Sets and its associated equipment and how they meet the requirement of this SOW.

4.3 Security Management

4.3.1 Access to Canada's Facilities

The Contractor may be provided access to Canada's Facilities, on an as required basis and non-interference basis, to allow the Contractor to view systems and obtain relevant data. Site visits may also be used to interview CCG TA to determine or confirm equipment functionality and operational parameters.

4.4 Project Meeting

4.4.1 Project Kick Off Meeting

Within one (1) month of Contract Award, the contractor must conduct a project Kick Off Meeting, IAW CDRL item CDRL-PM-05 and item CDRL-EN-01, at the contractor's facility, via video or teleconference or elsewhere as agreed to by Canada. The agenda of items to be reviewed at the meeting must include without being limited to:

1. The Project Management Plan IAW CDRL Item CDRL-PM-01 and DID-PM-01;
2. Technical Specification;
3. Critical path activities;
4. Plans for activities during the following period;
5. Integration to the VLE program; and
6. Any other contractual or programmatic issues associated with the project as mutually agreed between the TA, CA and the Contractor.

4.4.2 Project Review Meetings

The Contractor must conduct and coordinate Progress Review Meetings (PRMs) at least once each month or as mutually agreed between Canada and the Contractor.

The Contractor must hold the first PRM within one month following the Kick-Off Meeting.

PRMs must encompass total project status as of the review date.

4.4.3 Work Acceptance Meeting (WAM)

At the end of the project a Work Acceptance Meeting will take place to provide a complete review of the deliverables.

The Contractor must hold the WAM at a time to be determined by Canada but this meeting must take place no later than thirty (30) calendar days following the PG Sets commissioning.

4.4.4 Other Scheduled Meetings

The Contractor may identify through other requirements stipulated in this SOW, and the submission of his various plans the necessity to schedule other meetings. The Contractor must identify these meetings in the Project Schedule (PS). Canada's approval of the PS will confirm Canada's intention to attend such meetings.

4.4.5 Meeting Arrangements

When the Contractor is tasked to arrange and coordinate a meeting, it must be done IAW this section.

The Contractor must prepare and submit supporting documents required (in source format and not in Portable Document Format (PDF) or equivalent format) for a meeting at least Five (5) working days in advance of each review or meeting.

The Contractor must prepare and submit an agenda IAW CDRL Item CDRL-PM-02 and DID-PM-02 at least Five (5) working days in advance of each review or meeting except in the case of unscheduled meetings in which case the Contractor must submit an agenda 24 hours prior to the meeting.

Canada and the Contractor must mutually agree to the contents of the agenda.

4.4.6 Meeting Support

The Contractor must host and attend project reviews and meetings as required by this SOW, at the Contractor's facility, via teleconference, videoconference, or elsewhere as agreed to by Canada.

For all reviews and meetings hosted by the Contractor, the Contractor must:

1. Arrange the venue, including parking as appropriate;
2. Co-ordinate with Canada as appropriate;
3. Provide all administrative facilities and presentation equipment;
4. Ensure that qualified Contractor and subcontractor personnel attend the reviews or meetings;
5. Ensure and report that action items and decisions under the control of the Contractor as a result of the various meetings and reviews are implemented where applicable; and
6. Maintain and provide to CCG files, records, documents of all reviews and meetings.

4.4.7 Meeting Minutes

The Contractor must record, produce, deliver and revise, as required, minutes for all meetings. The Contractor must prepare and distribute within five (5) working days an electronic copy of the minutes to Canada's attendees IAW CDRL Item CDRL-PM-03 and DID-PM-03. Meeting minutes are accepted once signed by the CA. Canada will advise the Contractor of any issues within two working days of receiving the minutes.

4.4.8 Meeting Cancellations

The TA and CA may cancel PRMs or any other review meetings at their discretion with a minimum of 5 working days' notice. Rescheduling of meetings by the Contractor must be done only with the explicit agreement of Canada.

4.5 Reporting and communications

4.5.1 Progress Reports

The Contractor must monitor progress and deliver monthly Project Status Reports (PSRs) IAW CDRL Item CDRL-PM-04 and DID-PM-04.

4.5.2 Problem Reporting

The Contractor must advise Canada by fax/email within three (3) working days of the date the Contractor determines that there is a schedule alteration or contractual issue.

Upon such notification Canada will advise whether an unscheduled meeting or other action is required.

4.5.3 Data Reviews and Revisions

The contractor must submit all deliverable data in draft form for Canada's review IAW the applicable CDRL.

The Contractor must ensure that the draft document consists of a complete document compliant with the requirements of the SOW and the applicable CDRL and DID.

Unless otherwise noted, Canada's review process will take no more than ten (10) working days from receipt of the data.

The provision of comments by Canada on draft deliverables must not be construed as approval of the data deliverable.

Unless otherwise noted, the Contractor must address Canada's comments and resubmit the document showing a new revision number, within ten (10) working days of reaching agreement on the comments.

The Contractor must ensure that final documents consist of the draft document modified to include changes as authorized by Canada.

When revisions and amendments have been made to data deliverables required under this SOW, the Contractor must submit the revisions/amendments to Canada.

4.6 Action Item List (AIL)

The Contractor must maintain a historical, chronological and up-to-date list of Action Items resulting from reviews, meetings, or correspondence between the TA and the Contractor in a format acceptable to the TA for the duration of the project.

In the list the Contractor must record, as a minimum: identification number; title or description, date opened, action required, priority, organization responsible for taking action, brief statement of results in sufficient detail to clearly identify and track the action taken, date closed, and, status (open/closed).

The Contractor must ensure that, once entered, no entry is deleted.

The Contractor must include a subset of the list containing all open action items as an attachment to the monthly status reports.

The Contractor must make a copy or reproduction of the most current AIL or any portion thereof available to Canada upon request at any time.

5 Existing PG Sets Description

The existing PG Sets are the propulsion generators aboard the HEMTV's, providing electricity for propulsion, bow thruster, crane operations and all hotel loads aboard the vessel when underway.

This section provides a general overview of the existing PG Set functionality and performance capabilities. For more details refer to references in section 2.1, Table 1.

To be clear, each vessel has three (3) Propulsion Generator sets. This LOI is intended to procure the three (3) PG Sets for one vessel initially, with options to procure additional PG Sets for the other five (5) HEMTV's, for a total of eighteen (18) PG Sets if all options are exercised.

5.1 General System description

5.1.1 Characteristics of the existing HEMTV Propulsion System

The existing HEMTV Propulsion System has the following characteristics:

1. Three (3) Alco 251F engines rated at 2200kW each are coupled to General Electric synchronous generators rated at 2100kW each, further data in Table 8 below;
2. The vessel propulsion is achieved via two 600V/1100V 3400 kVA propulsion transformers feeding port and starboard cycloconverters that convert the incoming fixed AC into a +/- 18Hz 1900V 2800kW feed for each General Electric 3500 HP 12 pole synchronous motor;
3. The PG Sets are mounted in the main generator compartment of the vessel, between Frames 72 and 96. The Number 2 Generator is mounted on the centreline of the vessel, Number 1 Generator is mounted 3200mm to port of the centreline and Number 3 Generator is mounted 3200mm to starboard of the centreline of the vessel. It is the responsibility of the contractor to validate the exact position of the existing PG Sets and their associated equipment; and
4. The vessels were originally built to Lloyd's Classification Society rules and TCMS regulations in force at the time of construction. The vessels are not currently maintained "in Class", however they continue to comply with TCMS regulations.

Table 8: Generator Data

Manufacturer	General Electric	**kW**	2100
Serial Number	104479X	**Voltage**	600
Frame	6000	**Current**	2526
Model	139531	**RPM**	900
Type	ATI Synchronous	**Phase**	3
Frequency	60	**Power Factor**	0.8
kVA	2625	**Manufacture Date**	1984-1986
Brushless Exciter (DC)			
kW	17	**Volts**	116
Rated Amps	3.3	**Min V/A (Cold)**	41/1.4

5.1.2 Characteristics of the existing Fuel System

The existing Fuel System has the following characteristics:

1. Utilizes Marine Gas Oil (MGO) – with the following product standards, either is equally acceptable:
   i. Naval Distillate Fuel, CGSB 3.11-2010; or
   ii. Naval Distillate Fuel, ISO 8217:2012, DMA (MGO DMA).
2. The vessels must meet the Sulphur content permitted in the North American Emission Control Area; and
3. Fuel onboard is processed through a fuel oil purifier to a Day Tank, which provides fuel to each PG Set though a 25mm pipe, with a V = 0.4 m/s to each engine. The fuel flow is monitored at the inlet and outlet of the engines and is to remain.

5.1.3 Characteristics of the existing Lubrication System

The existing engine Lubrication System has the following characteristics:

1. Utilizes bulk lubricating oil from a Lube Oil Storage Tank to the engine sump via a 50mm pipe;
2. Is capable of drawing the oil from the engine to the lube oil purifier, then return to the engine while the engine is shut down via a 50mm pipe;
3. Was capable of having the engine sump drained to the Waste Oil Tank via a 50mm pipe, but is no longer used;
4. The existing engine is equipped with an electric driven pre-lube oil pump, Alfa Laval Moatti bypass filter, an engine oil pressure operated centrifugal filter, a lube oil cooler, and 3 x 3kW immersion heaters; and
5. The generator bearings are splash lubricated and self-contained.

5.1.4 Characteristics of the existing Air Start System

The existing engine Air Start System has the following characteristics:

1. Utilizes two main air receivers, with a working pressure of 17.9 bar and a capacity of 0.75 m^3 each, distributing compressed air after a reducing station to 10 bar via a 50mm pipe to each PG Set's air start motor; and
2. Is equipped with a flow switch for the lube oil system (interlock prevents starting the engine while the purifier is in use).

5.1.5 Characteristics of the existing Cooling Water System

The existing Cooling Water System has the following characteristics:

1. Utilizes a closed loop 'central cooling' system of fresh water to provide cooling to the diesel engine and generator;
2. Utilizes 125mm inlet and outlet pipes to the diesel engines, at a capacity of 33m³/hour at 86 kPa;
3. Is rated for maximum heat transfer per engine of Q = 1,500,000 kCal/hour;
4. Utilizes 50mm inlet and outlet pipes to cool the generator, at a capacity of 10.9 m³/hour at 34 kPa;
5. Is rated for maximum heat transfer per generator of Q = 68,735 kCal/hour;
6. Utilizes 12mm inlet and outlet pipes to cool the generator bearing oil, at a capacity of 0.27 m³/hour at 7 kPa;
7. Is rated for maximum heat transfer per bearing of 860 kCal/hour;
8. Is fitted with two (2) 4.5 kW Jacket water heaters per engine; and
9. Utilizes either Ashland's Maxigard Diesel Engine Cooling or Liquidewt Cooling Water Treatment depending on the vessel to treat the cooling water.

5.1.6 Characteristics of the existing Exhaust System

The existing Exhaust System has the following characteristics:

1. Piping secured by stays;
2. Expansion joints and exhaust gas silencers supported by mounting brackets; and
3. Insulation wrapping the heat affected components.

5.1.7 Characteristics of the existing Combustion Air System

The existing Combustion Air System has the following characteristics:

1. Two (2) supply fans, one port and one starboard, supplying air to the engine room;
2. Two (2) exhaust fans;
3. Associated duct work to distribute the air throughout the engine room and to the various pieces of equipment; and
4. The air entering the engine room can vary, depending on operations, due to the outside ambient air temperature, from -30°C to +30°C. There is no preheating of the air entering the engine room.

5.1.8 Characteristics of the existing PG Set Generator

1. The General Electric main generators use the system in the following diagram to achieve the brushless excitation needed for the vessel's voltage regulation:

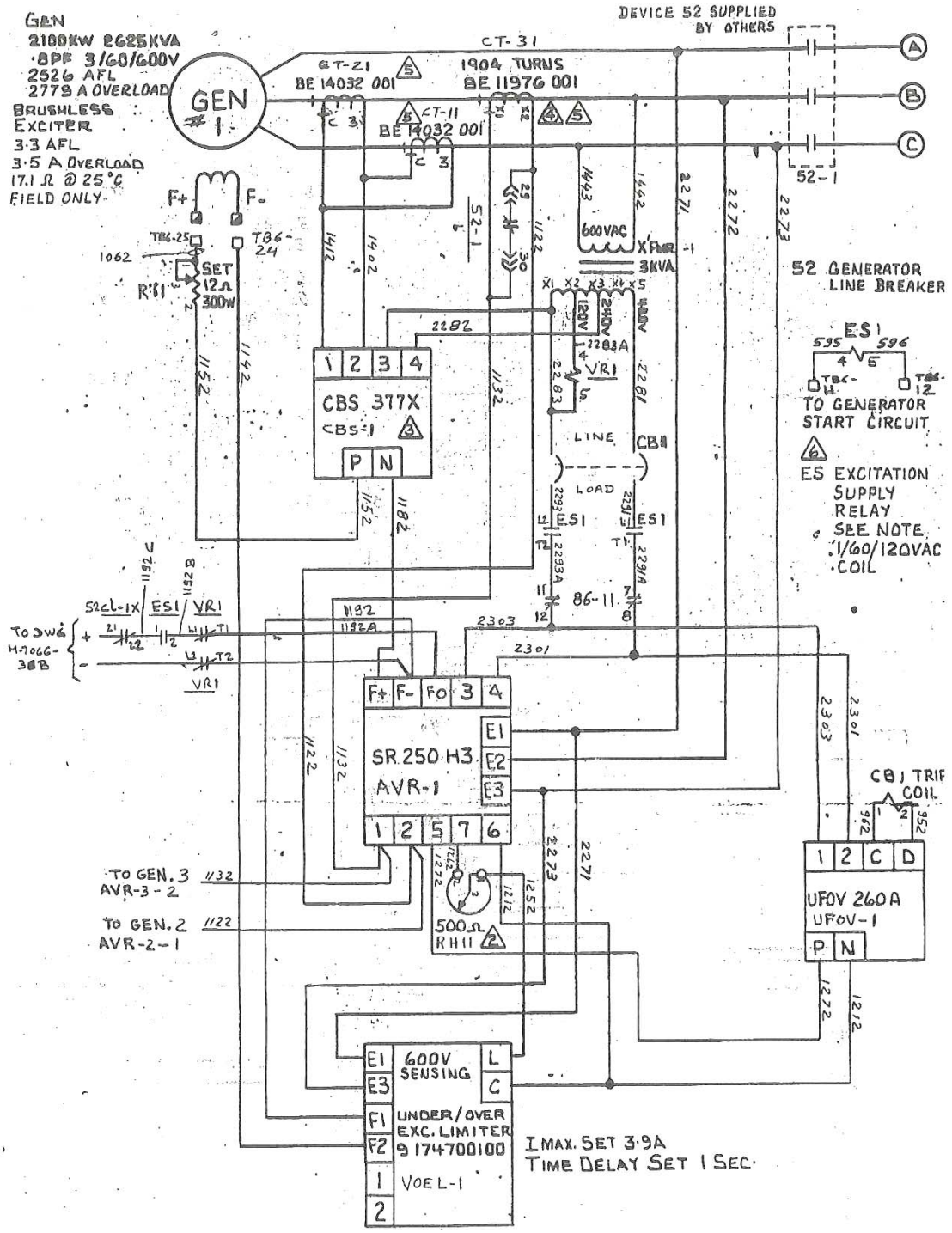

2. The Canadian Coast Guard is presently contracting the replacement of the Propulsion Control System, and a portion of that contract will replace the Automatic Voltage Regulators for the PG Sets. The brushless exciter field power is presently controlled by the Basler SR250H3 AVR, and should be replaced with model Basler DECS250N with the voltage regulation of the existing AVR's remain within +/- ½%.

3. Currently, the brushless exciter field power is controlled by the Basler SR250H3 regulator. Feed-back to the regulator is obtained by direct connection to the three (3) generator output lines. Control of the generator output voltage is obtained by adjusting the remote-mounted 500 ohm rheostat. Power to the regulator is obtained from the 600 volt generator lines via the 600/480 volt 3kVA power transformer under normal operating conditions. The current boost CBS377X module has been included to provide short-circuit fault clearing capability for the generator. Under these conditions, the current boost module provides field power to the exciter independently of the regulator. This power is derived from the generator line currents flowing through the BE 11976 001 2 power current transformers. The under frequency/overvoltage module UFOV260A and associated circuit breaker provide protection against generator overvoltage and prime mover speed variations.

4. The propulsion system is automatically regulated to prevent the total system load on the system from exceeding the available output of the diesel generators (Original design capped the total load on the system at 6930kW, 8660 kVA).

5.2 Existing PG Sets strip out

The existing PG Sets and their associated equipment will be removed at the shipyard under the VLE contract. The extent of the strip out will be defined in the Contractor's Integration Package of the actual contract. As a minimum, the removal will consist of:

1. The three (3) PG Sets which include the diesel engine and electric alternator;
2. The three (3) PG Set gauge and control panels;
3. Associated wiring, piping, sensor tubing, etc. for each PG Set;
4. Excitation controls and electronic governors; and
5. Equipment seating, overhead lifting rails and support systems as required.

5.3 General Particulars of the HEMTV's

Type: High Endurance Multi-tasked Vessel
Ice Class: Lloyd's Register ✠100A1 Ice Class 1A Super ✠ LMC Arctic Class 2
Years Built: 1985 - 1987
Voyage Class: Unlimited, beyond 200nm

Vessel	Built	Builder	Home Port
CCGS Ann Harvey	1987	Halifax Shipyards, NS	St. Johns, NL
CCGS Edward Cornwallis	1986	Marine Industries Limited, QC	Dartmouth, NS
CCGS George R Pearkes	1986	Versatile Pacific, BC	St. John's, NL
CCGS Sir William Alexander	1987	Marine Industries Limited, QC	Dartmouth, NS
CCGS Sir Wilfrid Laurier	1986	Collingwood Shipyard, ON	Victoria, BC
CCGS Martha L Black	1985	Versatile Pacific, BC	Quebec City, QC

Principal Dimensions:
Length: 83.0 meters
Breadth, molded: 16.2 meters
Loaded Draft: 5.8 – 6.2 meters
Tonnage: 3727 - 3853 GRT, 1503 -1533 NT

The HEMTV's are three engine, twin screw diesel-electric propulsion vessels that perform multiple tasks for the Government of Canada, including Search and Rescue, Buoy Tending, Aids to Navigation support, Conservation and Protection Patrols and Ice Breaking operations.

It should be noted that although all six vessels are the same class and have the same hull form, they were constructed in different shipyards resulting in minor differences in engine room machinery lay out. There is also a major difference between four (4) of the HEMTV's and the CCGS Edward Cornwallis and CCGS Sir William Alexander – the two vessels have one less deck in the superstructure due to the main deck crane arrangement. Thus the other four vessels are higher due to the extra deck and therefore have a different arrangement around the exhaust uptakes and in the stack areas.

6 New PG Sets Requirement

6.1 Engineering Reviews and Audits

The engineering reviews and audits must be prepared and conducted based on MIL-STD-1521B and must cover as a minimum:

1. System Requirements Review (SRR);
2. Preliminary Design Review (PDR);
3. Critical Design Review (CDR); and
4. Physical Configuration Audit (PCA).

The intent of this section is for the Contractor to track and update the documentation in order to incorporate all changes during the design, manufacturing and testing of the PG Sets, its equipment and components.

6.2 Environmental

The new PG Sets must meet the following environmental requirements. If any of the proposed COTS equipment does not fully comply with any of the following specifications, then the Contractor must customize the equipment to meet the requirements.

Table 9: Environmental Requirements

Item	Environmental Condition	Requirements	Standard (reference) or Comments
1	Accelerations due to ice features	All machinery fastening capable of withstanding loads imposed by longitudinal impact, vertical and transverse impact accelerations arising as a result of impacts with ice features	Class requirements
2	Operating Temperatures	All components 0°C to + 45°C at 100% humidity	ISO 15550:2002
3	Vibration For Electrical Equipment	Procedure according to: IEC 60068-2-6 Test F*c*	IACS Electrical Installations: Test Specification for Type Approval (Test #7)
4	Inclination For Electrical Equipment	Static and Dynamic: 22.5°	IEC 60092-504
5	Salt Mist for the Electric and Electronic equipment	Procedure according to: IEC 60068-2-52 Test Kb	IACS Electrical Installations: Test Specification for Type Approval (Test #12)

Item	Environmental Condition	Requirements	Standard (reference) or Comments
6	Water ingress (Watertight) for the Electric and Electronic equipment	All Electronic Enclosures must be rated minimum IP44	CCG Requirement
7	Electromagnetic Interference, Radiated and Conducted Emission	IEC 61000-4, CISPR 16-2	IACS Electrical Installations: Test Specification for Type Approval (Tests #13-20)
8	Vessel Inclination	The PG Sets must be capable of operation in the following angle of inclinations: Athwartships: Static: 15° Dynamic: 22.5° Fore and Aft: Static: 5° Dynamic: 7.5°	Class Requirements

6.3 PG Sets General Design Requirements

The propulsion system equipment to be replaced is indicated in the following diagram:

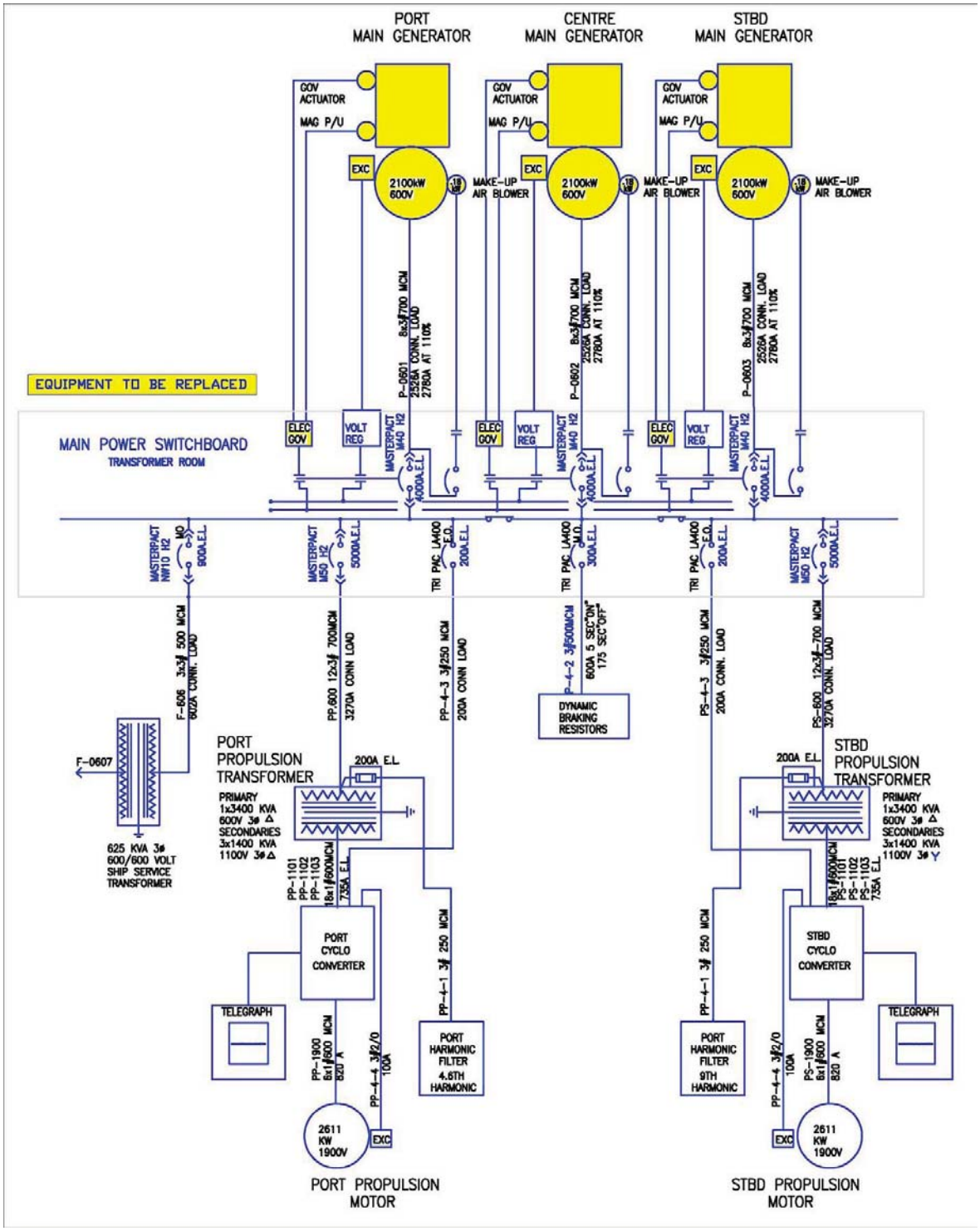

The PG Sets design must meet the following design requirements:

1. The PG Set design and installation must be approved by one (1) of the Classification Societies recognized by Canada and/or TCMS. The PG Set must be approved for marine use as a complete unit of the diesel prime mover and the AC electric alternator;

2. IMO Tier II engine certification as per MARPOL Annex VI and the Vessel Pollution and Dangerous Chemicals Regulations;

3. The engine must have a current Engine International Air Pollution Prevention (EIAPP) Certificate, and be supplied with an approved Technical File in accordance with the NOx Technical Code, 2008;

4. The proposed PG Sets must utilize medium speed diesel engines, with medium speed being defined for these purposes as either 600, 720 or 900 rpm in order to produce the 60 Hz required by the electrical distribution system;

5. Spare part Components types and quantities for the PG Sets must be proposed by the Contractor and approved by Technical Authority (TA). The quantities must meet IACS No. 26 - List of Recommended Spare Parts for main internal combustion engines, however, Note 4 of the IACS Recommendation is to be disregarded: Canada requires the quantity listed in IACS No. 26 to be provided with EACH engine supplied;

6. Special Tools and equipment required to carry out any scheduled maintenance routine or emergency at sea repair of any Spare Part components identified in section 8;

7. The Contractor must ensure that packaging of all individual spare parts and individual spare parts kits will provide adequate protection for a minimum of five (5) years, consistent with good economy, against damage, deterioration and loss of identification during storage, handling and shipment; and

8. Particulars of the work specified herein are given to the Contractor for guidance only; it must not be interpreted as a directive. The contractor will remain responsible for securing all information, details and dimensions from the vessel. It is the Contractor's responsibility to verify that all details of devices, wiring, and dimensions are correct.

6.4 PG Sets Mechanical Design

6.4.1 General Information

The PG Sets design must meet the following requirements and provision of information:

1. For the purposes of this SOW, PG Sets are defined to be comprised of the following components:
    a. Diesel engine prime mover;
    b. A/C Generator;
    c. Mounting arrangement for a) and b);
    d. Bedplate arrangement for a), b) and c); and
    e. Other required/related equipment.

2. The PG Sets must fit within the assembled generator set space designated by the following overall dimensions: Length - 8850mm, Width – 2362mm, Engine Height - 3226mm, and Generator Height – 2685mm with the engine orientated towards the forward end of the ship. The Contractor must confirm all dimensions as the clearances around the generator end in particular are dictated by the height of the Engine Room Flat deck above the tank top, piping and wire tray interferences. The Contractor must produce a red line overlay on the existing ship's plan and elevation drawings to demonstrate the proposed PG Set will fit in the existing space.

3. The Contractor must ensure the available space, with the proposed PG Sets installed, maintains clearances for walkways, clearance to access surrounding equipment and allows the removal of any engine or generator components for regular maintenance or overhaul without the need to move the PG Set;

4. The Contractor must make maximum use of the locations where the existing equipment is installed. If some of the new equipment needs to be relocated for the PG Sets operation it must be approved by the TA; and

5. The Contractor must supply details of the installation arrangement and include any dismantling, reassembly and component alignment costs in the proposal.

6.4.2 Stability

The weight and dimensions of the proposed PG Set must be equal or less than the existing PG Set. Any changes in weight must be identified and provided to the TA.

The PG Sets design must meet the following design requirements with regards to vessel stability:

1. The PG Sets design package must include an estimate of the weights to come off the vessel with the old PG Set components including the engine, generator, control cabinets, piping, exhaust uptakes and bedplate with any removed structural steel. The PG Set

design package must include an estimate of the weights of the proposed components to be installed on the vessel;

2. The Contractor must provide an analysis of the impact that the new PG Set installation will have on the existing vessel weights, centres and stability (both intact and damaged). This analysis must compare the original baseline values with the resulting values of the proposed PG Set arrangements to be implemented. To provide guidance to the supplier, refer to the original CCGS Ann Harvey Trim and Stability Book. The Loading Condition No. 6 "Buoy Handling - 50% Consumables" is found within the original stability booklet and is to be used as the basis; and

3. An analysis based on similar loading conditions as noted above must be completed for each subsequent vessel option that is exercised.

6.4.3 Structural Design

The PG Set supporting structure must meet the following design requirements:

1. The PG Sets supporting structure must be all welded construction and the material must be of a grade capable of supporting the loads and operating conditions required of this SOW while conforming to the Classification Society's requirements;

2. The PG Sets must have resilient mounts capable of supporting the PG Set. The mounts must be designed and manufactured in accordance with Classification Society rules and capable of withstanding the loads induced by the ship's motion as well as vibration and impact shocks due to ice breaking operations. The Contractor must provide approval certificates from the Classification Society detailing the make and model of the mounts to be used in this application;

3. The Contractor must describe the generator's bearing arrangements on its proposed bedding;

4. The PG Sets design package must identify and determine all ship's structural alterations (removals, relocations and additions) required to be done to the existing ship's structure IOT reinforce the deck and the tank areas below the proposed PG Sets seat locations all IAW the regulatory bodies rules and regulations. The proposed bedding arrangement shall incorporate the positioning of the existing double bottom structure for all load transfer to the ship's structure. The Contractor shall also identify any additional stiffening members which may be required to achieve the desired result;

5. The PG Set proposal must identify the alignment and supporting requirements for all external pipes, generator power cabling and the flexible pipe connections to be made to the PG set; and

6. A torsional vibration calculation must be performed for the PG Set installation.

6.4.4 Fuel Oil System

The PG Set design must be capable of integrating with the existing fuel system and the Contractor must:

1. Utilize the existing system to the greatest extent possible for the proposed PG Set;
2. Identify the proposed fuel oil requirements for pressure and piping diameter and any modifications required to the existing system in accordance with Class requirements;
3. Identify the proposed fuel consumption rate per engine at maximum load; and
4. Equip each PG Set with duplex replaceable fuel filter elements.

6.4.5 Lubrication System

The Lubrication System design must be capable of providing the same functionality and operations as the existing lubrication system and the Contractor must:

1. Utilize the existing system to the greatest extent possible for the proposed PG Set;
2. Identify the proposed lubricating oil requirements for pressure and piping diameter and any modifications required to the existing systems in accordance with Class requirements;
3. Identify the proposed lube oil consumption rate per engine at maximum load (g/kWh);
4. Identify the lubricating oil required to maintain the warranty of the new engines, as well as identifying a Canadian bulk oil distributor for the make and grade of oil required;
5. Identify the lubricating oil, if needed, required for the generator bearings to maintain the warranty of the new generator, as well as identifying Canadian oil distributors for the make and grade of oil required;
6. Be equipped with replaceable duplex lube oil filter elements, an electric driven pre-lube oil pump, a lube oil cooler, an engine oil pressure operated centrifugal filter, and oil heaters as required by the new system;
7. Identify the lube oil purification requirements including the Litres per hour flow rate; and
8. Identify if the engine will be shipped with a shipping sump or with the marine sump intact, including any requirements for removal of the shipping sump and installation of the marine sump.

6.4.6 Air Start System

The Air Start System must be capable of integrating with the existing Air Start System and the Contractor must:

1. Utilize the existing system to the greatest extent possible for the proposed PG Set;
2. Identify the proposed compressed air requirements for pressure and piping diameter and any modifications required to the existing system in accordance with Class requirements; and

3. Identify the method of air start (distributor or motor).

6.4.7 Cooling Water System

The Cooling Water System must be capable of integrating with the existing Cooling Water System and the Contractor must:

1. Utilize the existing cooling water system to the greatest extent possible for the proposed PG Set;
2. Identify the proposed cooling water requirements for pressure and piping diameter and any modifications required to the existing system in accordance with Class requirements;
3. Identify the proposed system heat transfer rating for maximum load and light load of each engine, and perform a heat rejection analysis to determine if the existing system will continue to be able to operate the existing Fresh Water Generators and what, if any, operating condition would prevent the operation of the Fresh Water Generators (i.e. one main engine running on low load);
4. Identify the proposed cooling water requirements including Total Dissolved Solids (TDS), pH value, chlorides, sulphates and other engine specific requirements for the PG Sets and any modifications required to the existing system including the required chemical treatments;
5. Describe the proposed engine's cooling water arrangement including number of engine driven pumps, arrangement of cooling circuit(s), jacket water heater requirements, pre-heating circulating pump(s); and
6. Describe the proposed generator's cooling water arrangement and, if required, the generator bearing's cooling water arrangement.

6.4.8 Exhaust System

The Exhaust System must be capable of integrating with the existing piping and within the existing vessel structure. The Contractor must:

1. Utilize the existing system to the greatest extent possible for the proposed PG Set;
2. Identify the proposed exhaust system requirements and any modifications required to the existing system in accordance with Class requirements and SOLAS regulations;
3. Identify the modification required to meet IMO Tier II certification as per MARPOL Annex VI and the Vessel Pollution and Dangerous Chemicals Regulations, if external systems are required for the proposed PG Sets to meet the Tier II certification;
4. Describe the new components required to meet Tier II certification, including, if applicable, new components requiring installation and new power requirements;
5. Provide information on whether the existing arrangement would be suitable for a Compact Silencer system, or retain a Conventional silencer arrangement. If a Compact Silencer system is possible, then calculations showing the expected exhaust gas flow velocity and expected noise level at the Bridge Deck for both systems must be provided.

6.4.9 Combustion Air System

The Combustion Air System must be capable of integrating with the existing Combustion Air System and the Contractor must:

1. Utilize the existing system to the greatest extent possible for the proposed PG Set;
2. Identify the proposed combustion air system requirements and any modifications required to the existing system in accordance with Class requirements;
3. Provide an air flow calculation to determine if the existing system is sufficient for the proposed PG Sets; and
4. Identify any modifications that may be required such as filters, replacement fans, and fan speed control.

6.5 PG Set Electrical Design

6.5.1 PG Set Engine Control System

The PG Set design must meet the following design requirements:

1. When selecting components for the PG Set design, preference must be given to Commercial Off The Shelf (COTS) industrial grade components. In the absence of suitable COTS industrial grade components, COTS commercial components must be selected and customized if required to meet the environmental requirements in section 6.2 Environmental;
2. The PG Sets must be supplied with modern PLC based control system designed in accordance with Classification Society Rules. The existing Engine Control Panels must be removed, and the functionality of the panels retained in the new system as far as practicable;
3. The existing PG Set Engine Control Panels are powered by the engine room UPS and there is a risk of engine shut down if there is a loss of power. The new control system must ensure a secondary power supply is available in accordance with Classification Society Rules, as well as sufficient reserve power to operate the engines in accordance with Transport Canada Regulations;
4. The new control system must integrate with the existing propulsion control system, and be capable of responding to the load demands including the ability to start automatically or remotely and permit auto synchronization of the generators. The three generators must have the ability to run in parallel or single operation under all loading conditions;
5. The Contractor must include new engine speed controls to allow for load sharing between generators regardless of the configuration of which generators (or all generators) are on line;
6. The Contractor must identify the communication protocol for the new engine control system to be capable of communicating with the vessel's existing Alarm and Monitoring system, and provide a listing of all available NMEA string registers the proposed PG Set's measured monitoring points;
7. The Contractor must identify the engine start logic for both automatic and manual starting operations, including a list of start inhibitions. The Contractor must identify the engine

parameters that must be present to cause PG Set shut down, and if there are any requirements that may cause automatic engine load reduction;

8. The Contractor must describe all aspects of the engine safety system, i.e. low lube oil pressure, high jacket water temperature, overspeed, crankcase mist detection, etc. The Contractor must provide a diesel over speed test procedure that can be performed by the vessel's crew to test and verify over speed functionality during mandatory regulatory inspections; and
9. The Contractor must describe the internal control system monitoring for fault detection of sensors or solenoids. The proposal must also detail the maintenance and diagnostic equipment required to maintain the PG Sets, including hardware and software.

6.5.2 PG Set Generator

The PG Set Generator design must meet the following design requirements:

1. The replacement generator must meet the existing generator specifications as noted in Table 8: Generator Data;
2. The replacement excitation system must meet or exceed the existing systems functionality and response;
3. The replacement generator proposed must not be rated at less than the current fitted unit of 2100 ekW and must not exceed this value by greater than + 10%;
4. The replacement generator rotor must be of a fully supported two bearing design;
5. The Contractor must determine the extent of wiring replacements that would be required to allow the installation of the new PG Set; and
6. The Contractor must identify and describe any other electrical requirements for the generator, or any accessories required by the proposed generator including OEM air filters for the generator cooling air.

6.6 PG Set Performance

The Contractor must detail the following performance requirements:

1. General operating data for the PG Set in accordance with ISO 15550 conditions, including:
    a. Power output, in kW;
    b. Mean effective power, in Bar;
    c. Fuel consumption at 50%, 75%, 85% and 100% loads, in g/kWh; and
    d. Oil consumption at 50%, 75%, 85% and 100% load, in g/kWh.
2. The PG Set load increase rates at various engine power levels;
3. The PG Set no load to full load response time with engine at operating temperatures;
4. The PG Set start up time (from preheated standby, to PG Set started and on load);
5. The PG Set instant load steps permissible; and
6. The PG Set overload rating, in % in excess of 100% and the number of hours permissible within a 12 hour period (i.e. for 2 hours continuous every 12 hours).

7 Acceptance Testing

7.1 PG Sets and Vessel's Integration and Installation packages Acceptance Testing

The purpose of the various acceptance tests is to demonstrate that the performance and functional requirements of the PG Sets with its integration and installation packages have been satisfactorily met.

7.1.1 FAT and Vessel's Set to Work Procedures

In preparation for the FAT and the PG Sets Dock Trial, the PG Sets must be Set-to-Work. The Contractor must provide the TA with a Set to Work procedures that will be in line with the related STW Plans sections 3.5 and 3.7. These procedures must be in line with the methodologies applicable to the various PG Sets systems and be submitted for review and comment to the TA prior to beginning the work.

7.1.2 PG Sets Factory Acceptance Test (FAT)

At the Contractor's facility, the Contractor must conduct a FAT on the PG Sets and all of its associated equipment and systems. The FAT must be conducted IAW the approved FAT Plan and Procedures and be witnessed and accepted by the attending Class surveyor and the TA or its delegated representative.

7.1.3 Vessel's Inclining Test (VIT) Acceptance (with the PG Sets installed)

Following the removal of the existing PG Sets, the installation of the new PG Sets, the confirmation of the vessel's new stabilities, the successful refloating of the vessel, the contractor inspection and acceptance of the Vessel's modifications with the installation of the PG Sets and all of its associated equipment, the Contractor's Certified Naval Architect must conduct the VIT IAW the approved VIT Plan and Procedures and be witnessed and accepted by the attending Class Surveyor and the TA or its delegated representative.

7.1.4 PG Sets Dock Trial Acceptance

Following the VIT Acceptance, the contractor must conduct a PG Sets Dock Trial. The PG Sets Dock Trial will be carried out with the vessel alongside and will be done to accept the performance of the PG Sets, its associated equipment and systems, its installation onboard the vessel, the vessel's modifications and all PG Sets related vessel's connections and supplies, inputs and outputs. The PG Sets Dock Trial Acceptance must be IAW the approved PG Sets Dock Trial Plan and Procedures and be conducted by the contractor in presence of its Certified Naval Architect and witnessed and accepted by the attending Class Surveyor and the TA or its delegated representative.

7.1.5 PG Sets Sea Acceptance Trials (SAT)

Following the PG Sets Dock Trial Acceptance, the contractor will proceed with the Sea Acceptance Trials for the performance's acceptance of the PG Sets, its associated equipment, their installation and the vessel' modifications under real operating conditions at sea. While the vessel will operated by the CCG for the VLE shipyard, the Sea Acceptance Trials will be conducted by Contractor in presence of its certified Naval Architect and witnessed and accepted by the attending Class surveyor and the TA or its delegated representative.

7.2 Test Management

7.2.1 PG Sets Factory STW Plan and Procedures

In accordance with the section 3.5, the Contractor must produce and deliver a STW Plan and Procedures that provides an overall outline of the entire spectrum of STW activities of the PG Sets. The STW Plan and Procedures must contain all conditions, precautions, adjustments, starting procedures, tolerances, and test equipment required in preparation of the PG Sets including all of its equipment and systems in order to perform the FAT. The STW Plan and Procedures delivery must be IAW CDRL item CDRL-AT-01 and DID-AT-01.

7.2.2 PG Sets Factory Acceptance Test (FAT) Plan and Procedures

In accordance with the section 3.6, the Contractor must produce and deliver a FAT Plan and Procedures that provides an overall outline of the entire spectrum of test activities of the PG Sets to be carried out at the factory. The FAT Plan and Procedures must contain all conditions, precautions, adjustments, expected test results, tolerances, and test equipment required to verify the correct operation of the PG Sets with all of its associated equipment and systems, and must be accepted by the attending Class surveyor and the TA or its delegated representative. The FAT Plan delivery must be IAW CDRL item CDRL-AT-02 and DID-AT-02.

7.2.3 PG Sets Vessel's STW Plan and Procedures

In accordance with the section 3.7, the Contractor must produce and deliver a Vessel's STW Plan and Procedures that provides an overall outline of the entire spectrum of STW activities of the PG Sets onboard. The Vessel's STW Plan and Procedures must contain all conditions, precautions, adjustments, starting procedures, tolerances, and test equipment required in preparation of the PG Sets including all of its equipment, systems and ship board integration, in order to perform the Dock Trial. The Vessel's STW Plan and Procedures delivery must be IAW CDRL item CDRL-AT-03 and DID-AT-03.

7.2.4 Vessel's Inclining Test (VIT) Plan and Procedures

In accordance with the section 3.8, the Contractor must produce and deliver a VIT Plan that provides an overall outline of the entire spectrum of VIT activities. The VIT Plan and Procedures must contain all pre-inspections, vessel's conditions, precautions, installations, expected test results, and test equipment required to carry the inclining tests and confirm the vessel's theoretical stabilities IAW the ASTM F1321-14 Standard Guide for Conducting a Stability Test. The VIT must be conducted by the contractor's certified naval Architect and must be accepted by the attending Class surveyor and the TA or its delegated representative. The VIT Plan delivery must be IAW CDRL item CDRL-AT-04 and DID-AT-04.

7.2.5 PG Sets Dock Trial Plan and Procedures

In accordance with the section 3.9 the Contractor must produce and deliver a Dock Trial Plan and Procedures that provides an overall outline of the entire spectrum of the PG Sets Dock Trials activities. The Dock Trial Plan and Procedures must contain all conditions, precautions, adjustments, expected test results, tolerances, and calibrated test equipment required to verify the correct operation of the PG Sets, its associated equipment and systems, its installation onboard the vessel, the vessel's modifications and all PG Sets related vessel's connections and supplies, inputs and outputs. The PG Sets Dock trial must be conducted by the contractor and must be witnessed and accepted by the attending Class surveyor and the TA or its delegated representative. The Dock Trial Plan and Procedures delivery must be IAW CDRL item CDRL-AT-05 and DID-AT-05.

7.2.6 PG Sets Sea Acceptance Trials (SAT) Plan and Procedures

In accordance with the section 3.10, the Contractor must produce and deliver a Sea Acceptance Trials Plan and Procedures that provides an overall outline of the entire spectrum of test activities of the PG Sets SAT activities. The SAT Plan and Procedures must contain all conditions, precautions, adjustments, expected test results, tolerances, and test equipment required to verify the correct operation of the PG Sets, its associated equipment and systems, its installation onboard the vessel, the vessel's modifications and all PG Sets related vessel's connections and supplies, inputs and outputs under real operating conditions at sea. The SAT must be conducted by the contractor with a vessel being operated and under the care and custody of the CCG for the VLE contractor and must be witnessed and accepted by the attending Class surveyor and the TA or its delegated representative. The SAT Plan and procedures delivery must be IAW CDRL item CDRL-AT-06 and DID-AT-06.

7.2.7 PG Sets Factory STW Reports

The Contractor must prepare the PG Sets Factory STW reports and submit them IAW CDRL Item CDRL-AT-07 and DID-AT-07.

7.2.8 PG Sets Factory Acceptance Test (FAT) Reports

The Contractor must prepare the PG Sets FAT reports and submit them IAW CDRL Item CDRL-AT-07 and DID-AT-07.

7.2.9 PG Sets Vessel's STW Reports

The Contractor must prepare the PG Sets Vessel's STW reports and submit them IAW CDRL Item CDRL-AT-07 and DID-AT-07.

7.2.10 Vessel's Inclining Test (VIT) Reports

The Contractor must prepare the VIT reports and submit them IAW CDRL Item CDRL-AT-07 and DID-AT-07.

7.2.11 PG Sets Dock Trial Reports

The Contractor must prepare the Dock Trials reports and submit them IAW CDRL Item CDRL-AT-07 and DID-AT-07.

7.2.12 PG Sets Sea Acceptance Trials (SAT) Reports

The Contractor must prepare the PG Sets SAT reports and submit them IAW CDRL Item CDRL-AT-07 and DID-AT-07.

7.3 Certification

7.3.1 Certifications by Classification Society and / or TCMS

The Contractor must obtain from one (1) of the Classification Societies (CS) recognized by Canada and TCMS all appropriate and applicable Certifications and Approvals applicable to the:

1. PG Sets manufacturing;
2. Vessel's modifications;
3. PG Sets and associated equipment installation; and
4. PG Sets and associated equipment STW, Test and Trials Operations and Commissioning.

The contractor must ensure that required CS and TCMS Certifications and Approvals are identified and agreed through the PDR and CDR.

7.3.2 Work Acceptance

Upon the successful review of the deliverables requested by this SOW the Work Acceptance will take place in accordance with the contract Terms and Conditions.

7.3.3 New PG Sets Commissioning

Upon the Work Acceptance Canada will declare the new PG Sets commissioned.

8 Integrated Logistics Support (ILS)

8.1 General

The Contractor must establish, implement and control an Integrated Logistics Support (ILS) Program for the PG Sets and its related systems. The Contractor ILS activities must form an integral part of all PG Sets planning, development, design, production, design qualification test, installation, set to work efforts associated with this SOW.

8.2 Maintenance of the PG Sets

8.2.2 Maintenance Concept

The contractor must prepare and deliver, for approval by the TA, the Maintenance Concept IAW CDRL item CDRL-LOG-02 and DID-LOG-02 and current industrial best practices.

8.2.3 Spare Parts

The contractor must propose to the Technical Authority (TA) for its approval, a list of Spares Component types and quantities set for the PG Sets IAW Table 5. The quantities must be able to meet the first Five (5) years of maintenance.

8.2.4 Special Purpose Tools (SPT)

The contractor must design and develop the SPT, if they are not readily available, for the maintenance of the PG Sets and its related equipment and components to be carried out by the CCG personnel, this IAW Table 4.

8.3 Cadre Training

The Contractor must deliver a PG Sets Training IAW this section, the section 3.11, the Table 3 Item 2, CDRL item CDRL-LOG-01 and DID LOG-01 and the current industrial best practice.

8.3.1 Number of Cadre Training Sessions and Students

The contractor must provide One (1) cadre training sessions on the PG Sets. The training is provided to the CCG operational and maintenance staff. The Cadre training session must include, without being limited to, the PG Sets capabilities, features, and components with a complete set of simulated realistic training scenarios.

8.3.2 Training Material and Content

The Cadre Training Package (CTP) must meet both the system operation and system maintenance requirements to a level suitable for operators, on board maintenance performed by the ship's crew and shore based maintenance that may require the presence of FSR's. The Contractor must prepare and produce a CTP for the course IAW best current industrial practices. The CTP must be delivered IAW CDRL item CDRL-LOG-01 and DID-LOG-01. The training material and content must be reviewed and approved by TA.

8.3.3 Training Location and Training Equipment

8.3.3.1 Training Location

The Contractor must deliver the Cadre training session on each ship in which the PG Sets are installed.

8.3.3.2 Training System

The Contractor must use the PG Sets and the SPT as a training system for the duration of training session.

8.3.4 Language

All Contractor supplied training and the training material must be provided in English for all vessels except the training and materials must be provided in French for the CCGS Martha L Black in the case that option is exercised.

8.4 Documentation

8.4.1 Document Formats

8.4.1.1 The Contractor must prepare and deliver all documentation in English and in Contractor's own format unless the format is otherwise noted in this SOW, except that all documentation must be provided in French for the CCGS Martha L Black in the case that option is exercised.

8.4.1.2 Delivery of documentation must be via email or FTP unless otherwise noted in this SOW.

8.4.1.3 All soft copies of documentation must be in the original editable source file format, e.g. Microsoft Word.

8.4.1.4 All soft copies of documentation in Adobe PDF format must have a table of contents and have folders or bookmarks to facilitate navigation of the documents.

8.4.1.5 The Contractor must produce and provide three (3) paper copies and two (2) electronic copies on CD ROM or USB format of the following documentation over the course of the contract, in English, except that all documentation must be provided in French for the CCGS Martha L Black in the case that option is exercised:

a) The Contractor's Proposal in Adobe PDF format;

b) All system equipment and system manuals as noted in the CDR section 3.14;

c) A Bill of Materials of all system components (including all fields noted in part (d) below);

d) A list of all system spare parts with the following fields, in Excel format:

- Associated Drawing Number (if applicable);
- Item Description;
- Manufacturer;
- Manufacturer's Part Number;
- CAGE Code (Manufacturer) – see 4.5;
- Vendor (if different from manufacturer);
- Vendor's Catalogue Number (if different from the Manufacturer's Part Number);
- Fitted quantity (number installed in the asset);
- Repairable (Y, N);
- Unit of Issue (each, box of 100, etc.);
- Procurement Lead Time (weeks);
- Shelf Life (in months, if applicable);
- Installed life (maximum allowable operating time);

- Usage Rate (forecast demands per year);
- Lifetime Buy (if applicable; based on planned asset life);
- Material Safety Data Sheet Number (if applicable);
- Unit Price; and
- Recommended Quantity (in same units as Unit of Issue).

e) All training materials for both operators and maintenance personnel.

8.4.1.6 The Contractor must provide an electronic copy of the following documentation over the course of the contract, in English, except that all documentation must be provided in French for the CCGS Martha L Black in the case that option is exercised:

- The Shipyard Installation Specification. These must be in the original editable source file format (Word, Excel, etc.);
- The Class Certification and Approval documentation for the PG Sets, and test certificates for all materials, lifting gear and machinery must be in Adobe PDF format;
- Factory Acceptance Test documentation must be in Adobe PDF format;
- Signal interface list between the PG Sets and the vessel's Alarm and Monitoring system in the original editable source file format, including data on the electrical signal characteristics such as voltage, current, frequency, digital input/output, and analog input/output, sensor or field device data, signal and connector identification, etc.; and
- Material Safety Data Sheets (MSDS) for any required material must be in Adobe PDF format.

8.4.1.7 The Contractor must provide two (2) electronic copies on CD ROM or USB format of the final system specific software required for all diagnostics, support and complete system operation of the PG Sets.

8.4.2 Electronic Protection

Drawings and documents must not be electronically protected so as to be Read Only files.

8.4.3 Electronic Labelling

All electronic media must be clearly labelled with the CCG project number, file names and drawing numbers. If a complete listing exceeds the label size, a “readme.txt” file in ASCII format must be provided with each disk. A printed copy of the Readme file must accompany each disk.

8.4.4 Drawing Formats

8.4.4.1 The successful Contractor must provide two (2) paper copies and one (1) electronic copy on CD ROM or USB format of the following drawings over the course of the contract:

a) Each of the PG Set design drawings and these must include:

i. General Arrangement drawings;

ii. Construction drawings of all individual components;

iii. Piping and Instrumentation diagram;

iv. Internal wiring electrical schematics;

v. Electronic circuit card schematics; and

vi. Lifting arrangement.

b) The Shipyard Installation Drawings from section 3.4; and

c) The system line drawings, system interconnection drawings and integration drawings with all non-OEM components.

8.4.4.2 All drawings must be standard ANSI paper size and must be in AutoCAD DWG format (latest release).

8.4.4.3 CCG National CAD Standard [MECTS-#2860606-v1-National_Cad_Standards] must be applied.

8.4.5 Documentation subsequent to the SAT

During the project the Contractor must prepare and deliver the documentation as identified in the SOW. For the SAT or following its successful acceptance, the Contractor must prepare and deliver, for TA acceptance, an as built version, if different than what has already been deliver, of the documentation listed below:

1. **Users manuals**; and

2. **Maintenance manuals** without being limited to the following:

   (a) Mechanical and Electrical equipment including all wiring;
   (b) System troubleshooting documentation;
   (c) Repair instructions;
   (d) All the mechanical and electrical schematics / drawings; and
   (e) Illustrated Parts Breakdowns (IPB).

8.5 Technical Documentation

8.5.1 Engineering Data Access

The Contractor must provide access to all engineering data during the contract.

8.5.2 Technical Publications

The Contractor must prepare and deliver the Technical Publications in English except that documentation must be provided in French for the CCGS Martha L Black in the case that option is exercised.

8.5.3 Original Equipment Manufacturer (OEM)

The Contractor must make maximum use of existing OEM technical publications. The Contractor must if required modify with the OEM's authorization the technical publications to reflect Canadian specific equipment, nomenclature, part numbers, modifications, and maintenance procedures IAW current industrial best practices.

8.6 Packaging, Handling, Storage & Storage Ability

8.6.1 General

The Contractor must conduct Packaging, Handling, Storage and Transportability IAW current industrial best practices.

8.6.2 Packaging Methods and Levels

The Contractor must ensure that packaging of provisioned items will provide adequate protection for a minimum of five (5) years, consistent with good economy, against damage, deterioration and loss of identification during storage, handling and shipment.

8.6.3 Marking of Packages

The Contractor must mark all packages, shipping containers and consolidation containers IAW current shipping best practices, as applicable.

8.6.4 Shelf Life Items

The Contractor must mark the individual package for each shelf life item IAW current industrial best practices with:

1. Date of manufacture;
2. Shelf life expiry date; and
3. Storage environment restrictions (for example no freezing, no sunlight).

9 Engineering Change Specifications

9.1 General

The Engineering Change (EC) must be detailed specification for changes to the original COTS PG Sets (if applicable) and to the CCGS Ann Harvey IOT support the installation and operation of the PG Sets and all of its related equipment and components as developed by the contractor IAW this SOW and CS and TCMS applicable rules and regulations . The EC specifications must be in a format that will provide all of the necessary detailed vessel's structural, electrical and mechanical interfaces and component modifications. The EC Specifications must be reviewed and approved for implementation by the TA. The EC work packages must then be implemented at a shipyard under a separate contract.

During the Shipyard implementation phase any change or variation to, the approved original EC specifications must be addressed by the contractor through an EC Particularization Process and summited to the CS/TCMS and TA approval for documentation updating and implementation.

9.2 Engineering Changes Designs

The contractor must:

1. Prepare the EC specifications for the PG Sets (if applicable);
2. Prepare the EC specifications for the vessel's structure and all applicable systems connected to the new PG Sets and its related systems, equipment and components;
3. Prepare the EC drawings for items 1 and 2 above; and
4. Prepare the EC package using metric units for the PG Sets deliverables, unless the source of the original documentation is non-metric, and no changes to that original documentation is being made.

The initial EC Specification, including the preliminary and final versions, as well as all particularized EC specifications will be reviewed and approved by the TA.

10 Acronyms and Abbreviations

AIL	Action Item List
AMS	Alarm and Monitoring System
BOM	Bill of Materials
CA	Contracting Authority
CCG	Canadian Coast Guard
CDR	Critical Design Review
CDRL	Contract Deliverable Requirement List
CEIL	Contract End Items List
CMP	Configuration Management Plan
COTS	Commercial Off The Shelf
CS	Classification Society
CTP	Cadre Training Package
DID	Data Item Description
DTP	Dock Trial Plan
DWG	Drawing
EC	Engineering Change
EIP	Equipment Identification Plate
EIAPP	Engine International Air Pollution Prevention
FAT	Factory Acceptance Test
FMEA	Failure Modes and Effect Analysis
FPM	Final Project Meeting
FSR	Field Service Representative
FTP	File Transfer Protocol
GRT	Gross Registered Tonnage
HEMTV	High Endurance Multi Tasked Vessel
IAW	In Accordance With
ILS	Integrated Logistics Support
IOT	In Order To
ISO	International Organization for Standardization
ITP	Inspection Test Plan
IWRC	Independent Wire Rope Core
KB	Knuckle Boom
kW	Kilowatt
LED	Light Emitting Diode
MCC	Motor Control Center
MSDS	Material Safety Data Sheet
NT	Net Tonnage
OC	Operator’s Cabin

OEM	Original Equipment manufacturer
PCA	Physical Configuration Audit
PCS	Propulsion Control System
PDF	Portable Document Format
PDR	Preliminary Design Review
PLC	Programmable Logic Controller
PM	Project Manager
PMP	Project Management Plan
PRM	Project Review Meeting
PS	Project Schedule
PWGSC	Public Works Government Services Canada
QA	Quality Assurance
RFP	Request for Proposal
SAT	Sea Acceptance Trials
SOW	Statement Of Work
SPT	Special Purpose Tools
SRR	System Requirement Review
STW	Set To Work
SWL	Safe Working Load
TA	Technical Authority
TCMS	Transport Canada Marine Safety
TDP	Technical Data Package
Tm	Metric Tonne
VAC	Voltage Alternative Current
VIT	Vessel Inclining Test
VLE	Vessel Life Extension
WAM	Work Acceptance Meeting
WBS	Work Breakdown Structure