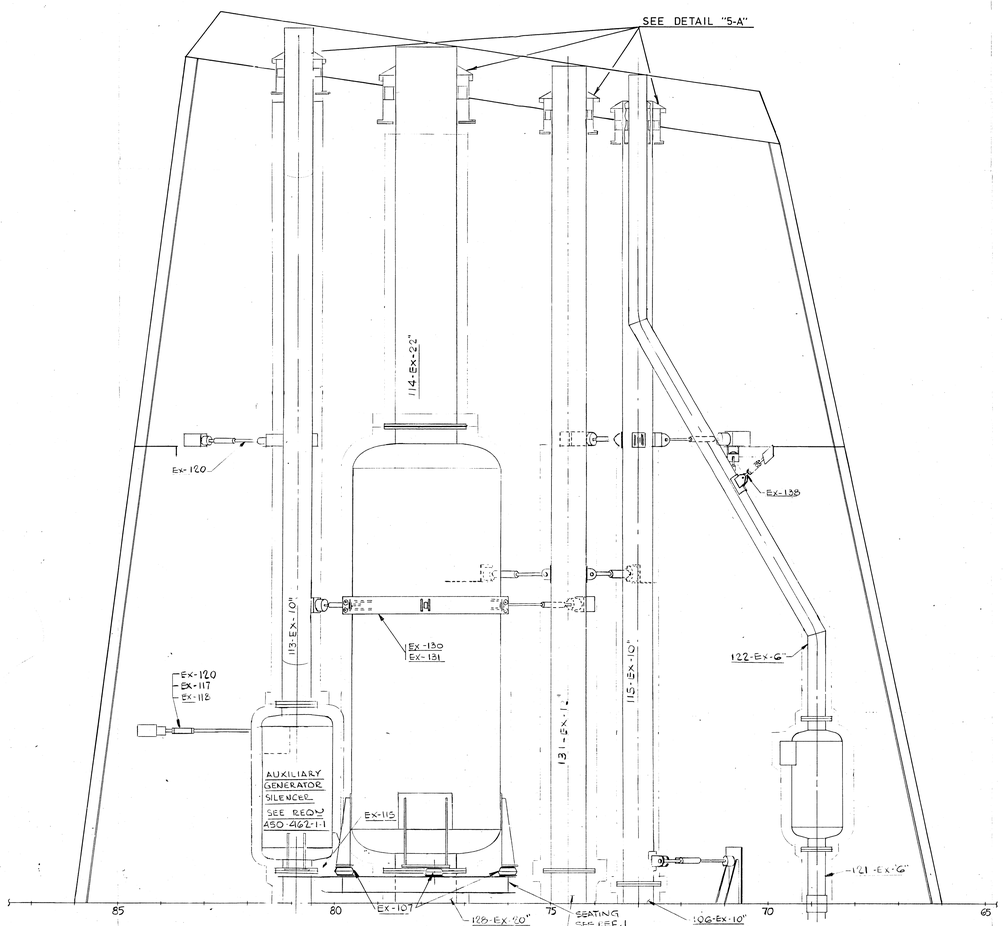

ELEVATION — ℄ LOOKING TO STB'D

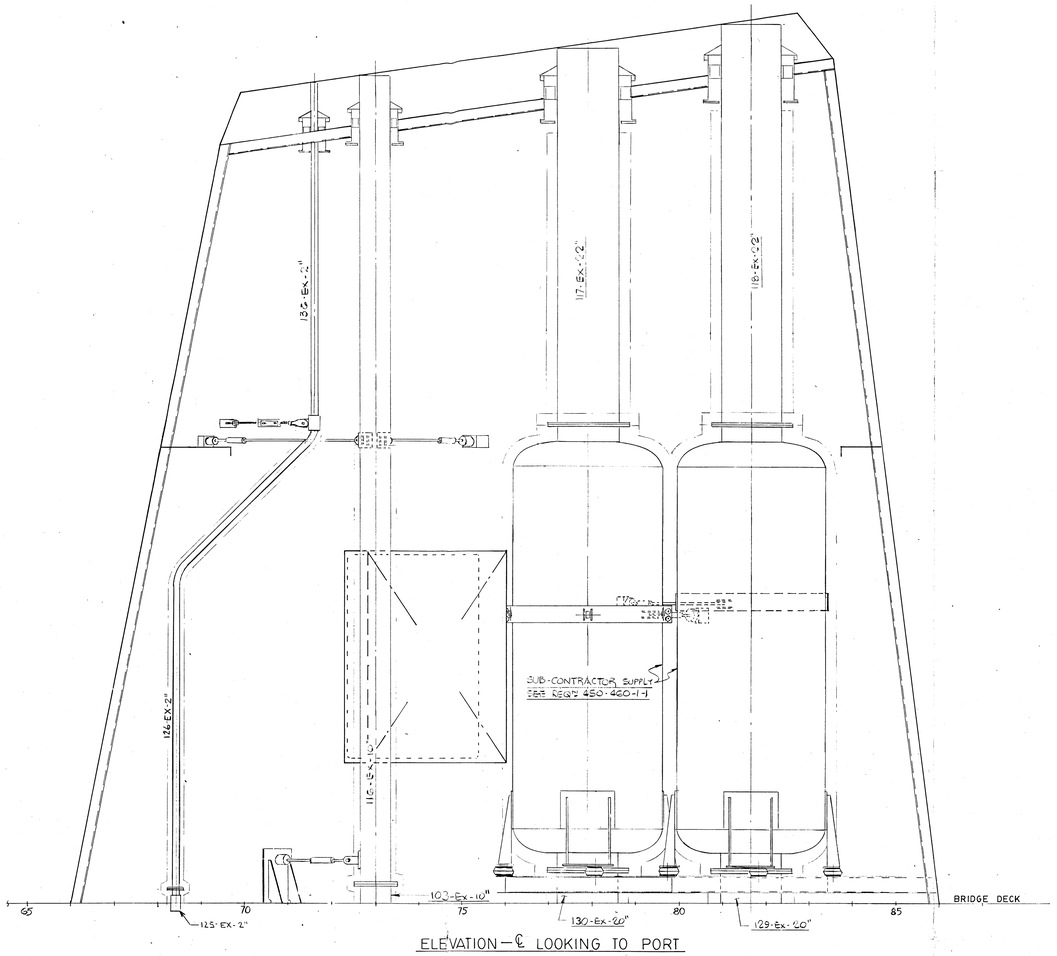

ELEVATION — ℄ LOOKING TO PORT

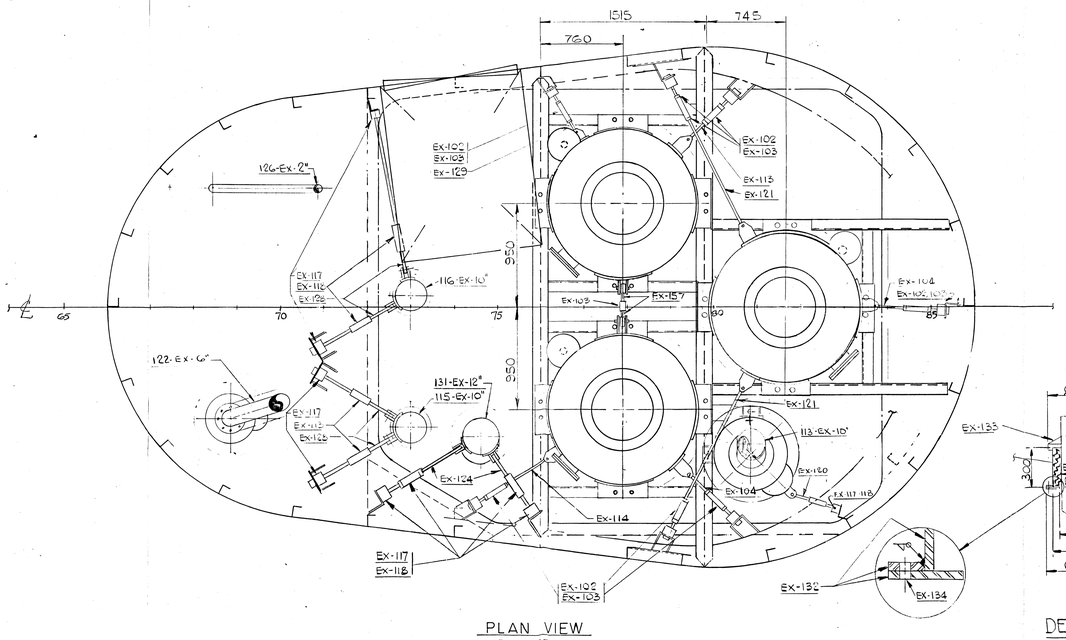

PLAN VIEW
AT BRIDGE DECK

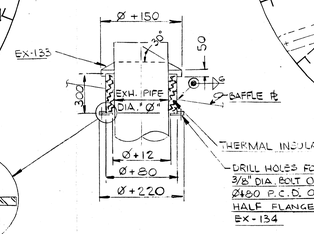

DETAIL "5-A"
NOT TO SCALE

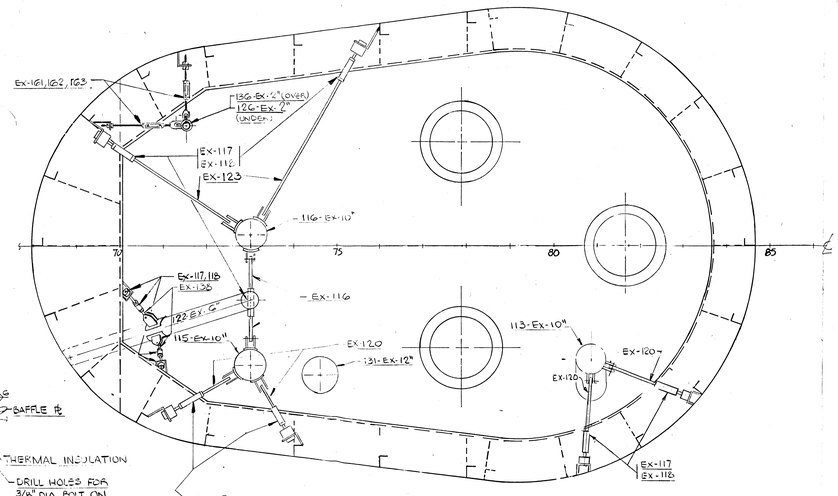

PLAN VIEW
AT STRINGER 4200 ABOVE BRIDGE DECK

IMPUTATION DES COUTS/COST CHARGES

GR	IT	DESCRIPTION
		SEE SH 1

REFERENCES

NO	TITRE/TITLE	DESSIN/DWG	F/SH
	SEE SH 1		

POUR MATERIEL VOIR/FOR MATERIAL REFER TO:

NOTES:

REVISIONS

NO	ZN	CODE	DESCRIPTION	PAR/BY	DATE
2			AS FITTED UP TO 450	DB	86/7/1
			AUX GENTOR SILENCER & PIPE HSER 10 PIPES # 125 126 EX-2" REVISED & RELOCATED		
			INSULATION ADDED ON PIPES # 114-117-118-EX-22" AND 115-EX-10"	YG	86/06/09
1			INSULATION ADDED TO SILENCERS & PIPES		
			ALL EXHAUST PIPES EXTENDED.	R.B.	85/10/22

APPROBATIONS/APPROVALS

	SOU/SUB	APP	REV	REV	REV	REV	REV
CLASSN							
GCC/CCG							
PROP/OWN	85.07.03	85.07.05					

MARINE INDUSTRIE LIMITEE
SOREL, P.Q., CANADA

TYPE 1100 NAVAIL TENDER LIGHT ICEBREAKER

EXHAUST SYSTEM
(FUNNEL)

PAR/BY	APPR	CONT NO	DESSIN DWG	REV
R.E.T. BEAUJ.P.P.M.	Johnston	450 / 451	465-22	2
VER/CK	ECH/SC 1:20			F/SH 7/8
	DATE 85.07.10			

FORMAT ISO-A0