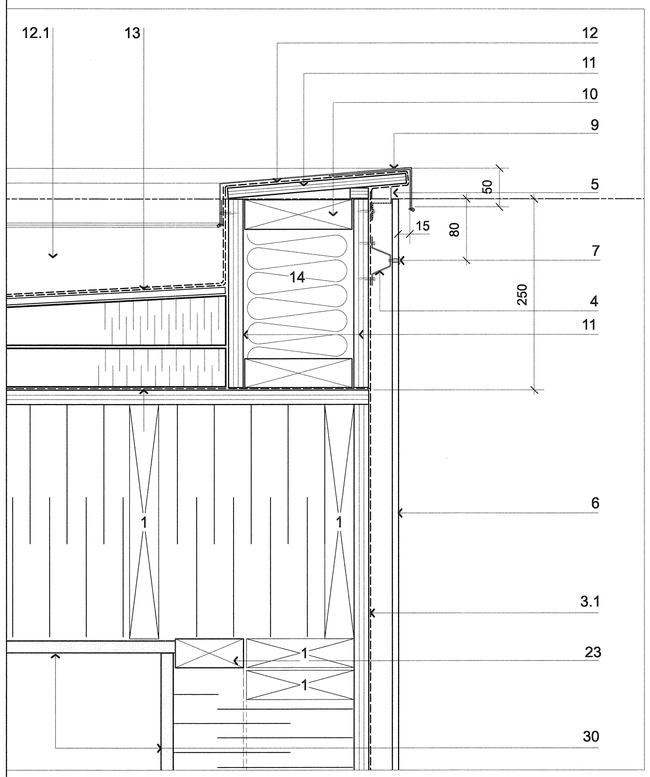

3 / A1 NEW PARAPET/HEAD DETAIL - AT NEW CEMENT PANEL SKIN

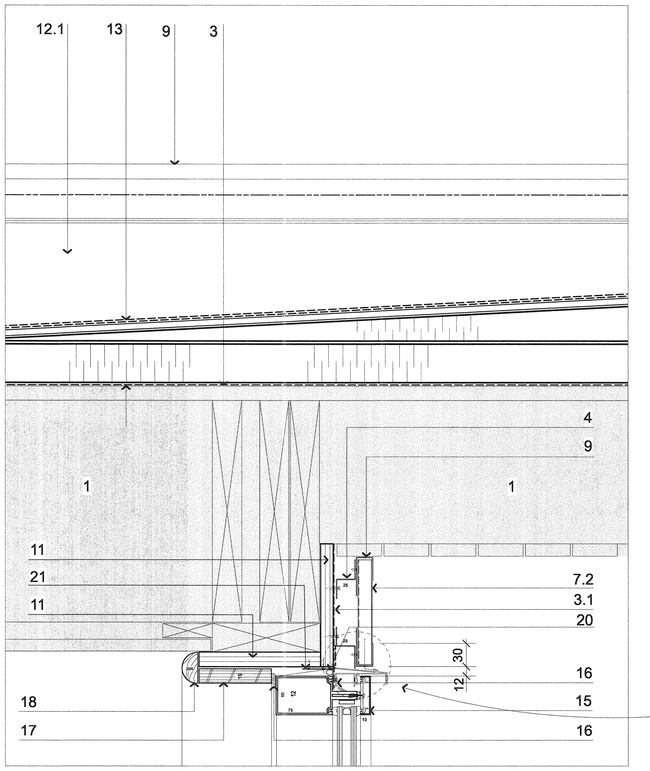

4 / A4 HEAD DETAIL - NEW WINDOW AT EXISTING SOFFIT

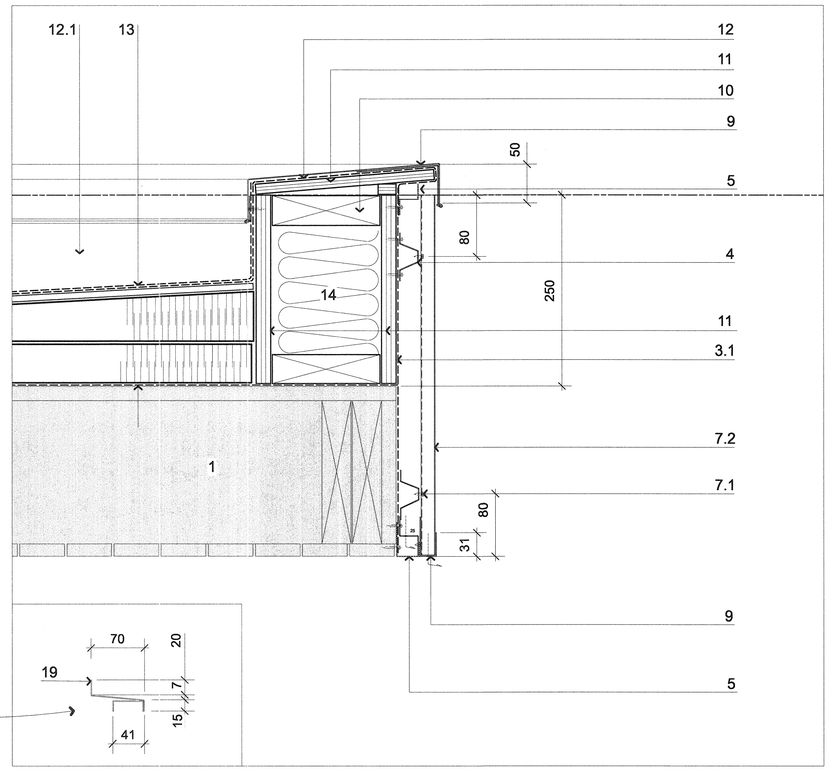

7 / A4 DETAIL - NEW METAL FASCIA AND NEW PARAPET AT OVERHANG

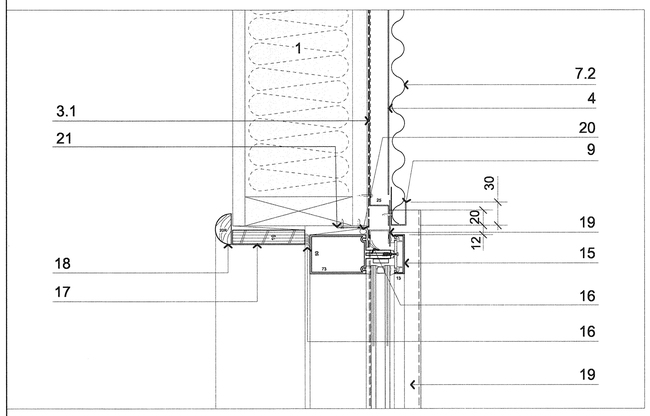

2 / A1 NEW JAMB DETAIL - AT NEW METAL SKIN WALL

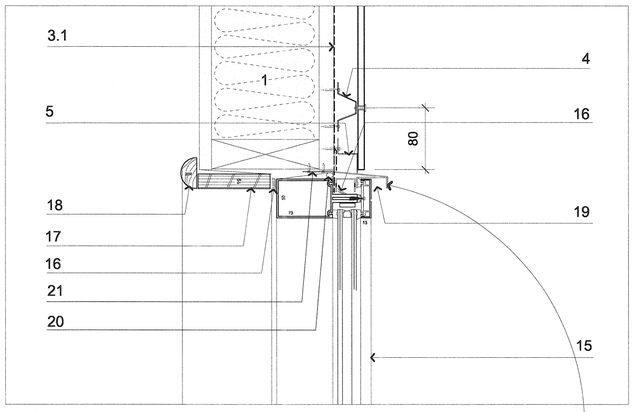

5 / A1 HEAD DETAIL - NEW WINDOW TO NEW CEMENT PANEL SKIN

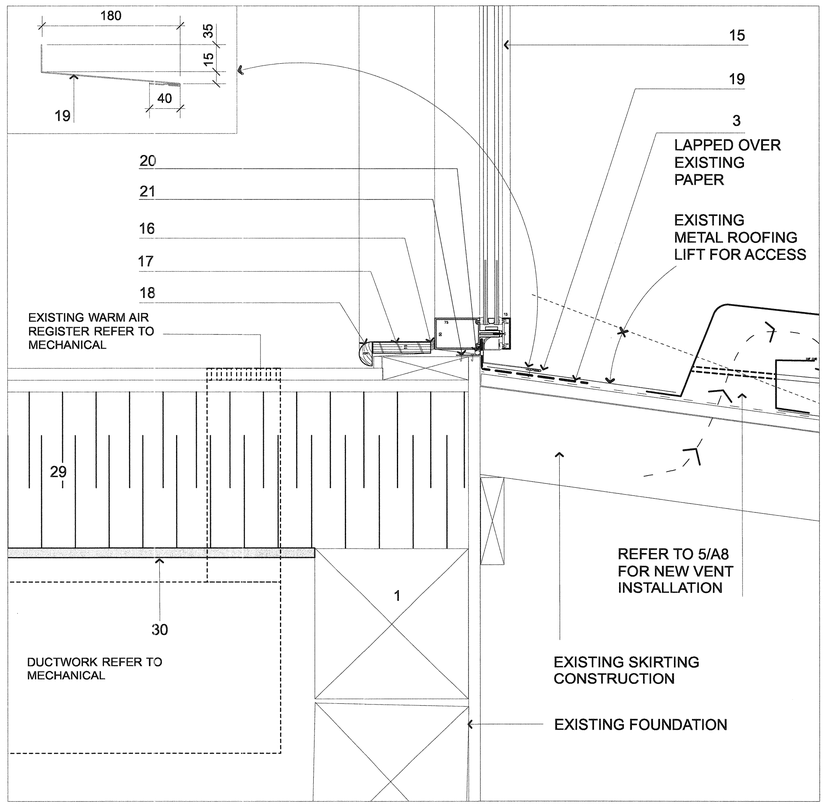

8 / A1 SILL DETAIL - NEW WINDOW TO EXISTING SKIRTING

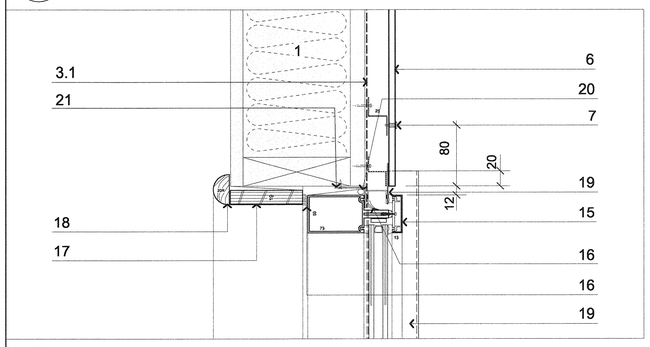

1 / A1 NEW JAMB DETAIL - AT NEW CEMENT PANEL SKIN

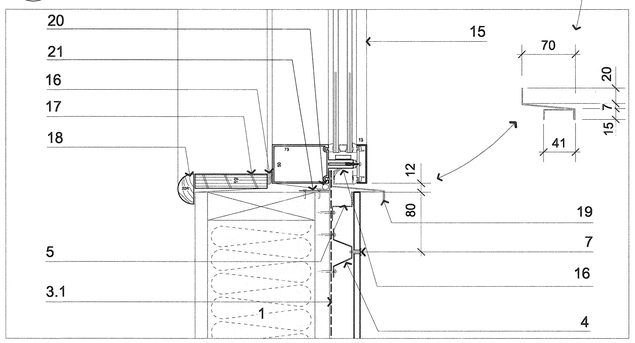

6 / A1 SILL DETAIL - NEW WINDOW TO NEW CEMENT PANEL SKIN

12173

PWGSC - A1 - 841X594

0 10 20 30 40 50 60 70 80 90 100mm

Public Works and Government Services Canada / Travaux publics et Services gouvernementaux Canada

REAL PROPERTY SERVICES
Pacific Region
SERVICES IMMOBILIERS
Région de Pacifique

REGISTERED ARCHITECT BRIAN RAMONI COUTLEE BRITISH COLUMBIA

NUMBER 10

Revision/ Revision	Description/Description	Date/Date
5		
4	ISSUED FOR TENDER	AUG 31 2016
3	95% PROGRESS SET	AUG 2016
2	ISSUED FOR TENDER	APRIL 05 2016
1	95% REVIEW	MAR15 2016
0	99% REVIEW	JULY 17 2015

A / C
A detail number / numéro de detail
B source drawing no. / de dessin no.
C detail on drawing no. / detail sur dessin no.

Client/client

PARKS CANADA AGENCY

WESTERN AND NORTHERN REGION

Project title/Titre du projet

DAWSON CITY
YUKON TERRITORY

PALACE GRAND THEATRE

FOUNDATION / MECHANICAL /ELECTRICAL RENOVATION AND GENERAL UPGRADE

Consultant Signature Only

Designed by/Concept par

Drawn by/Dessine par

PWGSC Project Manager/Administrateur de Projets TPSGC
TOM DUNPHY

Regional Manager, Architectural and Engineering Services
Gestionnaire régionale, Services d'architectural et de génie, TPSGC

Drawing title/Titre du dessin

DETAILS

Project No./No. du projet	Sheet/ Feuille	Revision no./ La Révision no.
R.068835.001	A9 OF	0

DM5XXXXXX