Public Works and Government Services Canada | Travaux publics et Services gouvernementaux Canada

RETURN BIDS TO:
RETOURNER LES SOUMISSIONS À:

Bid Receiving - PWGSC / Réception des soumissions - TPSGC
11 Laurier St. / 11, rue Laurier
Place du Portage, Phase III
Core 0B2 / Noyau 0B2
Gatineau, Québec K1A 0S5
Bid Fax: (819) 997-9776

SOLICITATION AMENDMENT
MODIFICATION DE L'INVITATION

The referenced document is hereby revised; unless otherwise indicated, all other terms and conditions of the Solicitation remain the same.

Ce document est par la présente révisé; sauf indication contraire, les modalités de l'invitation demeurent les mêmes.

Comments - Commentaires

Vendor/Firm Name and Address
Raison sociale et adresse du fournisseur/de l'entrepreneur

Issuing Office - Bureau de distribution

Electrical & Electronics Products Division
11 Laurier St./11, rue Laurier
7B3, Place du Portage, Phase III
Gatineau, Québec K1A 0S5

Title - Sujet ANTENNA SYSTEM STRUCTURE & CABLE	
Solicitation No. - N° de l'invitation W8474-177298/A	**Amendment No. - N° modif.** 004
Client Reference No. - N° de référence du client W8474-177298	**Date** 2016-10-28
GETS Reference No. - N° de référence de SEAG PW-$$HN-463-71674	
File No. - N° de dossier hn463.W8474-177298	**CCC No./N° CCC - FMS No./N° VME**
Solicitation Closes - L'invitation prend fin **at - à 02:00 PM** **on - le 2016-11-07**	**Time Zone** **Fuseau horaire** Eastern Standard Time EST
F.O.B. - F.A.B. **Plant-Usine:** ☐ **Destination:** ☑ **Other-Autre:** ☐	
Address Enquiries to: - Adresser toutes questions à: De Rito, Johanne	**Buyer Id - Id de l'acheteur** hn463
Telephone No. - N° de téléphone (819) 420-0332 ( )	**FAX No. - N° de FAX** ( ) -
Destination - of Goods, Services, and Construction: **Destination - des biens, services et construction:**	

Instructions: See Herein

Instructions: Voir aux présentes

Delivery Required - Livraison exigée	**Delivery Offered - Livraison proposée**
Vendor/Firm Name and Address **Raison sociale et adresse du fournisseur/de l'entrepreneur** **Telephone No. - N° de téléphone** **Facsimile No. - N° de télécopieur**	
Name and title of person authorized to sign on behalf of Vendor/Firm (type or print) **Nom et titre de la personne autorisée à signer au nom du fournisseur/ de l'entrepreneur (taper ou écrire en caractères d'imprimerie)** **Signature**	**Date**

Canada

Solicitation No. W8474-177298/A

Amendment 004 is issued to answer questions on the above mentioned Solicitation.

Q. 1 Can you provide us with additional information on the items listed below?

A.1 Please find additional information/description below.

Most drawing are proprietary of the company and, if required, vendors must contact the companies.

Also attached is a publication that depicts the parts required for a specific antenna (LP-1112) from a specific manufacturer.

Line item 002 (Better description)
HEXAGON HEAD, 0.163 I NCH HEIGHT, 0.437 INCH BETWEEN FLATS, CORROSION RESIST ING STEEL, PASSIVATED, 1/4-20UNC-2A, 0.750 INCH LONG,1. 031 INCH FASTENER LENGTH

Line item 005 (Drawing)
SHANK LENGTH 66.000 INCHES NOMINAL
OVERALL LENGTH 66.000 INCHES NOMINAL
OUTSIDE DIAMETER 6.000 INCHES NOMINAL
SHANK OUTSIDE DIAMETER 0.750 INCHES NOMINAL
ROD TYPE INTEGRAL
UPPER END STYLE OVAL
LOWER END STYLE CONE
DESIGN TYPE SCREW BLADE
MATERIAL STEEL
SURFACE TREATMENT ZINC

Line item 007 (Better description)
BODY STYLE TUBE TYPE
OVERALL LENGTH 1.219 INCHES MINIMUM AND 1.281 INCHES MAXIMUM
OVERALL DIAMETER 0.246 INCHES MINIMUM AND 0.254 INCHES MAXIMUM
CONTINUOUS CURRENT RATING IN AMPS 1.500
MAXIMUM VOLTAGE RATING IN VOLTS 250.0 AC AND 250.0 DC
CIRCUIT OVER-CURRENT INTERRUPTION TYPE TIME DELAY
CIRCUIT OVER-CURRENT INTERRUPTION DELAY TIME IN SECONDS 12.0 200 PCT OF CURRENT RATING
SHORT-CIRCUIT/INTERRUPT CURRENT RATING IN AMPS 35.0
INTERRUPTION INDICATOR METHOD VISIBLE ELEMENT
TERMINAL SURFACE TREATMENT SILVER PLATED
FEATURES PROVIDED NONRENEWABLE FUSIBLE ELEMENT
TEST DATA DOCUMENT 81349-MIL-F-15160 SPECIFICATION (INCLUDES ENGINEERING TYPE BULLETINS, BROCHURES,ETC., THAT REFLECT SPECIFICATION TYPE DATA IN SPECIFICATION FORMAT; EXCLUDES COMMERCIAL CATALOGS, INDUSTRY DIRECTORIES, AND SIMILAR TRADE PUBLICATIONS, REFLECTING GENERAL TYPE DATA ON CERTAIN ENVIRONMENTAL AND PERFORMANCE REQUIREMENTS AND TEST CONDITIONS THAT ARE SHOWN AS "TYPICAL", "AVERAGE", "NOMINAL", ETC.).

SPECIFICATION/STANDARD DATA 81349-MIL-F-15160/2 GOVERNMENT SPECIFICATION
CASE MATERIAL GLASS
TERMINAL MATERIAL BRASS OR COPPER OR PHOSPHOR BRONZE OR COPPER ALLOY
FRAGILITY FACTOR MODERATELY DELICATE
PRECIOUS MATERIAL SILVER
PRECIOUS MATERIAL AND LOCATION TERMINAL SURFACES SILVER

Line item 009 (Size)

MATERIAL STEEL
SURFACE TREATMENT ZINC
STYLE DESIGNATOR 110 ANCHOR
OPENING WIDTH 1.626 INCHES MINIMUM AND 1.750 INCHES MAXIMUM
INSIDE LENGTH 3.500 INCHES MINIMUM AND 4.000 INCHES MAXIMUM
MATERIAL DIAMETER 1.000 INCHES MINIMUM
BREAKING STRENGTH 56550.0 POUNDS NOMINAL
CLOSURE HEAD STYLE 3 FLAT
END CONDITION PLAIN
LOCKING DEVICE TYPE COTTER PIN
FEATURES PROVIDED FORELOCK PINHOLE
SPECIAL FEATURES WEAPON SYSTEM ESSENTIAL
SPECIFICATION/STANDARD DATA 80205-NAS1042 PROFESSIONAL/INDUSTRIAL ASSOCIATION STANDARD
NONDEFINITIVE SPEC/STD DATA 4A TYPE AND A GRADE AND 1 CLASS
CRITICALITY CODE JUSTIFICATION FEA

Line item 013 (Drawing)

MATERIAL SHANK STEEL
STYLE DESIGNATOR Q251 RING HANDLE
SHANK DIAMETER 0.312 INCHES NOMINAL
RING HANDLE DIAMETER 1.144 INCHES NOMINAL
GRIP LENGTH 1.437 INCHES NOMINAL
DETENT TO TAPERED END DISTANCE 0.375 INCHES NOMINAL
ACTUATION TYPE PULL AND PUSH
DETENT QUANTITY 1
PIN ATTACHMENT TYPE RING
END ITEM IDENTIFICATION 5/16 INCH DETENT PIN
PART NAME ASSIGNED BY CONTROLLING AGENCY TRANSPORTABLE LOG PERIODIC ANTENNA MODEL LP-1112MR
MANUFACTURER: UNITED STATES ANTENNA PRODUCTS,L.L.C.
SEE PUBLICATION C-53-414-000_MS-001 LP-1112MR Log Periodic (ATTACHED)

Line item 014 (Drawing)

MANUFACTURER: UNITED STATES ANTENNA PRODUCTS, L.L.C.
SEE PUBLICATION C-53-414-000_MS-001 LP-1112MR Log Periodic (ATTACHED)

Line item 015 (Size)
MATERIAL OVERALL STEEL
SURFACE TREATMENT OVERALL ZINC
THREAD SERIES DESIGNATOR BODY UNC
NOMINAL THREAD SIZE BODY 0.625 INCHES
THREAD CLASS BODY 1B
END STYLE 201 CLEVIS AND CLOSED EYE
EYE WIDTH 0.875 INCHES NOMINAL
LENGTH 21.500 INCHES NOMINAL
PINHOLE DIAMETER 0.500 INCHES NOMINAL
FORK WIDTH 0.750 INCHES NOMINAL
TAKE-UP DISTANCE 12.000 INCHES NOMINAL
BODY STYLE 250 ROUND OPEN BODY
FURNISHED ITEMS AND QUANTITY 1 COTTER PIN AND 1 PIN
NONDEFINITIVE SPEC/STD DATA 1 TYPE AND 1 FORM AND 8 CLASS
HG-227 5/8x12

Line item 016 (Size)
MATERIAL STEEL
SURFACE TREATMENT ZINC
STYLE DESIGNATOR 110 ANCHOR
OPENING WIDTH 0.531 INCHES NOMINAL
INSIDE LENGTH 1.188 INCHES MINIMUM AND 1.312 INCHES MAXIMUM
MATERIAL DIAMETER 0.250 INCHES MINIMUM AND 0.374 INCHES MAXIMUM
BREAKING STRENGTH 5300.0 POUNDS MINIMUM
SAFE OPERATING LOAD RATING 1060.000 POUNDS MAXIMUM
CLOSURE HEAD STYLE 4 OVAL
END CONDITION PLAIN
LOCKING DEVICE TYPE COTTER PIN
FEATURES PROVIDED FORELOCK PINHOLE
NONDEFINITIVE SPEC/STD DATA 4A TYPE AND A GRADE AND 1 CLASS
G-213 5/16 ROUND PIN ANCHOR SHACKLE 3/4T

Line item 021 (Size)
END SLEEVES FOR USE ON BIG GRIP DEAD END 5/8 INCH

Line item 024 (Size)
END SLEEVES FOR USE ON BIG GRIP DEAD END 5/16 INCH

Line item 026 (Drawing)
SPECIAL FEATURES PART NAME ASSIGNED BY CONTROLLING AGENCY LOWER NUMBER 3 TOWER SECTION ASSEMBLEY
END ITEM IDENTIFICATION TRANSPORTABLE LOG PEROIDIC ANTENNA MODEL LP-1112MR
PART NAME ASSIGNED BY CONTROLLING AGENCY PART NAME ASSIGNED BY CONTROLLING AGENCY LOWER NUMBER 3 TOWER SECTION ASSEMBLEY
MANUFACTURER: UNITED STATES ANTENNA PRODUCTS,L.L.C.
SEE PUBLICATION C-53-414-000_MS-001 LP-1112MR Log Periodic (ATTACHED)

Line item 028 (Drawing)
END ITEM IDENTIFICATION TRANSPORTABLE LOG PERIODIC ANTENNA MODEL LP-1112MR
PART NAME ASSIGNED BY CONTROLLING AGENCY LOWER NUMBER 1 TOWER SECTION ASSEMBLY
MANUFACTURER: UNITED STATES ANTENNA PRODUCTS,L.L.C.
SEE PUBLICATION C-53-414-000_MS-001 LP-1112MR Log Periodic (ATTACHED)

Line item 029 (Drawing)
END ITEM IDENTIFICATION TRANSPORTABLE LOG PERIODIC ANTENNA MODEL LP-1112MR
PART NAME ASSIGNED BY CONTROLLING AGENCY LOWER NUMBER 2 TOWER SECTION ASSEMBLY
MANUFACTURER: UNITED STATES ANTENNA PRODUCTS,L.L.C.
SEE PUBLICATION C-53-414-000_MS-001 LP-1112MR Log Periodic (ATTACHED)

Line item 030 (Drawing)
MAST CONSTRUCTION TELESCOPIC
NESTED HEIGHT 67.700 INCHES
LOAD RATING 89.400 MILES PER HOUR NOMINAL
MATERIAL GLASS FIBER
MAXIMUM HEIGHT 15.0 METERS
ACCESSORY COMPONENTS AND QUANTITY T-BAR,1 EA; STOWAGE BAG,1; GROUND SPIKE,1; SOFT GROUND STAKE,12 EA; HAMMER,1; GUY REEL ASSY,2 EA; TECH. MANUAL; TRANSIT BAG; ANTENNA HALYARD
SPECIAL FEATURES GLASS/CARBON FIBRE COMPOSITION,LIGHTWEIGHT,NONCORRODING,DENT AND BEND RESISTANT; CARRYMAST,MAN PORTABLE,ONE MAN,TEN MINUTE ERECT AND DISMANTLE;LOW RADAR/IR SIGNATURE; INTEGRAL ALIGNMENT DEVICE; REPAIRABLE ON SITE; CAN SUPPORT HF WIRE,WHIP AND GRID DISH ANTENNAS,PUBLIC ADDRESS SPEAKERS,LIGHTING SYSTEMS,SURVEILLANCE AND SENSING EQUIPMENT
MANUFACTURER: C&S ANTENNA

Line item 031 (Drawing)
END ITEM IDENTIFICATION PIVOT FOOT, TOWER
PART NAME ASSIGNED BY CONTROLLING AGENCY TRANSPORTABLE LOG PERIODIC ANTENNA MODEL LP-1112MR
MANUFACTURER: UNITED STATES ANTENNA PRODUCTS, L.L.C.
SEE PUBLICATION C-53-414-000_MS-001 LP-1112MR Log Periodic (ATTACHED)

Line item 034 (Size)
GENERAL CHARACTERISTICS ITEM DESCRIPTION
COPPERWELD; MEAN DIA. 0.237 TO 0.247 IN.; 3 WIRE NO. 9. HS; 6M M STRAND; 21 IN. LG.; YELLOW
MANUFACTURER: PREFORMED LINE PRODUCTS COMPANY

Line item 035 (Size)
Type N Male Positive Stop™ for 1/2 in AL4RPV-50, LDF4-50A, HL4RPV-50 cable

Line item 036 (Size)
BODY STYLE 9D STRAIGHT SHAPE
OVERALL LENGTH 2.130 INCHES MAXIMUM
CONNECTOR LOCKING METHOD INTERNALLY THREADED COUPLING NUT
THREADED DEVICE TYPE COUPLING FACILITY
CABLE ENTRANCE DIAMETER 0.500 INCHES NOMINAL
MATING END QUANTITY 1
INCLUDED CONTACT QUANTITY SINGLE MATING END SINGLE CONTACT GROUPING 1
CONTACT REMOVABILITY SINGLE MATING END SINGLE CONTACT GROUPING REMOVABLE
INCLUDED CONTACT TYPE SINGLE MATING END SINGLE CONTACT GROUPING COAXIAL PIN
CONTACT SURFACE TREATMENT SINGLE MATING END SINGLE CONTACT GROUPING GOLD
SPECIAL FEATURES USES CAGE 84147, PN (FSJ4-50B), 0.500 INCH DIAMETER SUPERFLEX COAXIAL CABLE; HEX SHAPED COUPLING NUT; CAPTIVATED INNER CONTACT ATTACHMENT; CRUSH-FLARE OUTER CONTACT ATTACHMENT; MAXIMUM BODY DIAMETER IS 0.940 INCH
PRECIOUS MATERIAL GOLD AND SILVER
PRECIOUS MATERIAL AND LOCATION PLATED PIN GOLD AND PLATED BODY SILVER

Line item 037 (Size)
BODY STYLE STRAIGHT SHAPE, EXTERNAL COUPLING
OVERALL LENGTH 2.90 INCHES NOMINAL
OVERALL DIAMETER 0.88 INCHES NOMINAL
SPECIAL FEATURES TYPE N FEMALE POSITIVE STOP FOR 1/2 IN. AL4RPV-50, LDF4-50A, HL4RPV-50 CABLE; CONNECTOR IMPEDANCE: 50 OHM; MAXIMUM RF OPERATING VOLTAGE: 707.0 V; CONNECTOR IMPEDANCE: 50 OHM
END ITEM IDENTIFICATION SSN-774 VIRGINIA CLASS SUBMARINE
PART NAME ASSIGNED BY CONTROLLING AGENCY HELIAX CONNECTOR

Line item 043 (Size)
END ITEM IDENTIFICATION T-HANDLE BOLT ASSEMBLY
PART NAME ASSIGNED BY CONTROLLING AGENCY TRANSPORTABLE LOG PERIODIC ANTENNA MODEL LP-1112MR; T-HANDLE BOLT ASSEMBLY
MANUFACTURER: UNITED STATES ANTENNA PRODUCTS, L.L.C.

Line item 044 (Drawing)
END ITEM IDENTIFICATION UPPER NO. 2 TOWER SECTION ASSEMBLY
PART NAME ASSIGNED BY CONTROLLING AGENCY TRANSPORTABLE LOG PERIODIC ANTENNA MODEL LP-1112MR; UPPER NUMBER 2 TOWER SECTION ASSEMBLY
MANUFACTURER: UNITED STATES ANTENNA PRODUCTS, L.L.C.
SEE PUBLICATION C-53-414-000_MS-001 LP-1112MR Log Periodic (ATTACHED)

Line item 045 (Drawing)
END ITEM IDENTIFICATION UPPER NO. 1 TOWER SECTION ASSEMBLY
PART NAME ASSIGNED BY CONTROLLING AGENCY TRANSPORTABLE LOG PERIODIC ANTENNA MODEL LP-1112MR; UPPER NUMBER 1 TOWER SECTION ASSEMBLY
MANUFACTURER: UNITED STATES ANTENNA PRODUCTS, L.L.C.
SEE PUBLICATION C-53-414-000_MS-001 LP-1112MR Log Periodic (ATTACHED)

Line item 047, 048, 049 (Antenna Manufacturer Name)
MANUFACTURER: UNITED STATES ANTENNA PRODUCTS, L.L.C.
SEE PUBLICATION C-53-414-000_MS-001 LP-1112MR Log Periodic (ATTACHED)

Line item 050 (Size)
MAST CONSTRUCTION TELESCOPIC
MATERIAL ALUMINUM
MAXIMUM HEIGHT 32.000 FEET
SPECIAL FEATURES SHORTENED VERSION OF THE CTM-15 MAST, 18 INCHES SHORTER; WHEN COLLAPSEDTHE HEIGHT IS 50 INCHES
MANUFACTURER C&S ANTENNA

Line item 067 (Size)
SURFACE TREATMENT GALVANIZED
LENGTH 18.000 INCHES NOMINAL
SPECIAL FEATURES 3/4 INCH JAW-EYE, TYPE HG227
END ITEM IDENTIFICATION GUY WIRE, ANTENNA, LOG PERIODIC, HIGH FREQUENCY

Line item 069 (Size)
GENERAL CHARACTERISTICS ITEM DESCRIPTION 0.625 IN. DIAMETER GUY STRAND; GRADE 180 & EXTRA HIGH STRENGTH (EHS) GRIPS; GALVANIZED
PART NAME ASSIGNED BY CONTROLLING AGENCY DEAD END GRIP

Line item 072 (Drawing)
TRIPOD, 100MM MAST TUBING, USED WITH CTM15 ANTENNA
manufacturer: C&S Antenna

Line item 073 (Size)
MATERIAL STEEL
MATERIAL DIAMETER 0.5 INCHES NOMINAL
BREAKING STRENGTH 12400.0 POUNDS MINIMUM
SPECIAL FEATURES CURVED STEEL BOLT CLOSURE,DESIGNED TO ACCOMMODATE A STRAIN INSULATOR;ANCO LOCKNUT ON BOLT

Line item 075 (What is G 233?)
Please delete Part Number G-233 2T and insert Part Number G213 2T.
MATERIAL STEEL
SURFACE TREATMENT ZINC
OPENING WIDTH 0.813 INCHES NOMINAL
INSIDE LENGTH 1.875 INCHES NOMINAL
MATERIAL DIAMETER 0.5 INCHES NOMINAL
SAFE OPERATING LOAD RATING 4000.0 POUNDS MAXIMUM
END CONDITION PLAIN
LOCKING DEVICE TYPE COTTER PIN

Line item 086 (Size)
Type N Female Positive Stop™ for 1-5/8 in cable

Line item 087 (Size)
MATERIAL OVERALL STEEL
MATERIAL DOCUMENT AND CLASSIFICATION OVERALL FF-T-791B,TYPE 1,FORM 1,CLASS 8 FED SPEC ALL MATERIAL RESPONSES
SURFACE TREATMENT OVERALL ZINC
SURFACE TREATMENT DOCUMENT AND CLASSIFICATION HOT DIPPED GALVANIZED STEEL
THREAD SERIES DESIGNATOR UNJ THREADS END FITTINGS AND BODY HAS UNC THREADS
NOMINAL THREAD SIZE 0.7500 INCHES
THREAD DIRECTION OVERALL RIGHT-HAND
END STYLE 201 CLEVIS AND CLOSED EYE
EYE WIDTH 1.0000 INCHES NOMINAL
LENGTH 22.3800 INCHES NOMINAL CLOSED AND 35.8800 INCHES NOMINAL OPEN
TAKE-UP DISTANCE 12.0000 INCHES NOMINAL
BODY STYLE 250 ROUND OPEN BODY
PART NAME ASSIGNED BY CONTROLLING AGENCY TURNBUCKLE,3/4 INCH X 12 INCH
MANUFACTURER POLTEC

Line item 088 (Size)
MATERIAL OVERALL STEEL
MATERIAL DOCUMENT AND CLASSIFICATION OVERALL FF-T-791B,TYPE 1,FORM 1,CLASS 8 FED SPEC ALL MATERIAL RESPONSES
SURFACE TREATMENT OVERALL ZINC
SURFACE TREATMENT DOCUMENT AND CLASSIFICATION HOT DIPPED GALVANIZED STEEL
THREAD SERIES DESIGNATOR UNJ THREADS END FITTINGS AND BODY HAS UNC THREADS
NOMINAL THREAD SIZE 0.8750 INCHES
THREAD DIRECTION OVERALL RIGHT-HAND
END STYLE 201 CLEVIS AND CLOSED EYE
EYE WIDTH 1.2500 INCHES NOMINAL
LENGTH 22.3400 INCHES NOMINAL CLOSED AND 38.0900 INCHES NOMINAL OPEN
TAKE-UP DISTANCE 12.0000 INCHES NOMINAL
BODY STYLE 250 ROUND OPEN BODY
PART NAME ASSIGNED BY CONTROLLING AGENCY TURNBUCKLE,3/4 INCH X 12 INCH
MANUFACTURER POLTEC

Line item 089 (Size)
MATERIAL OVERALL STEEL
MATERIAL DOCUMENT AND CLASSIFICATION OVERALL FF-T-791B,TYPE 1,FORM 1,CLASS 8 FED SPEC ALL MATERIAL RESPONSES
SURFACE TREATMENT OVERALL ZINC
SURFACE TREATMENT DOCUMENT AND CLASSIFICATION HOT DIPPED GALVANIZED STEEL
THREAD SERIES DESIGNATOR UNJ THREADS END FITTINGS AND BODY HAS UNC THREADS
NOMINAL THREAD SIZE 0.6250 INCHES
THREAD DIRECTION OVERALL RIGHT-HAND
END STYLE 201 CLEVIS AND CLOSED EYE
EYE WIDTH 0.8800 INCHES NOMINAL
LENGTH 21.2800 INCHES NOMINAL CLOSED AND 34.5300 INCHES NOMINAL OPEN
TAKE-UP DISTANCE 12.0000 INCHES NOMINAL
BODY STYLE 250 ROUND OPEN BODY

PART NAME ASSIGNED BY CONTROLLING AGENCY TURNBUCKLE,5/8 INCH X 12 INCH
manufacturer poltec

Line item 090 (Size)

MATERIAL STEEL STAINLESS
MATERIAL DOCUMENT AND CLASSIFICATION TYPE 304 ASSN STD ALL MATERIAL RESPONSES
STYLE DESIGNATOR 204 SPLIT OVAL
OVERALL WIDTH 3.1300 INCHES NOMINAL
OVERALL LENGTH 4.2500 INCHES NOMINAL
INSIDE WIDTH 1.7500 INCHES NOMINAL
INSIDE LENGTH 3.2500 INCHES NOMINAL
OVERALL THICKNESS 0.9700 INCHES NOMINAL
SUPPLEMENTARY FEATURES THIMBLE WILL ACCOMODATE A 5/8 INCH DIAMETER WIRE ROPE;GROOVE WIDTH OF THIMBLE 0.6600 INCHES NOMINAL
PART NAME ASSIGNED BY CONTROLLING AGENCY EXTRA HEAVY WIRE ROPE THIMBLES SS-414 TYPE
MANUFACTURER POLTEC

Line item 091 (Size)

MATERIAL STEEL STAINLESS
MATERIAL DOCUMENT AND CLASSIFICATION RR-C-271D,TYPE IVA,GRADE A,CLASS 2 FED SPEC ALL MATERIAL RESPONSES
STYLE DESIGNATOR 110 ANCHOR
OPENING WIDTH 0.8100 INCHES NOMINAL
INSIDE LENGTH 1.8800 INCHES NOMINAL
MATERIAL DIAMETER 0.5000 INCHES NOMINAL
LOCKING DEVICE TYPE SCREW PIN
SUPPLEMENTARY FEATURES PIN DIAMETER 0.5000 INCH NOMINAL;HOLE IN HEAD OF LOCKING PIN 1.1800 INCHES NOMINAL DIAMETER;OVERALL OUTSIDE WIDTH OF SHACKLE 2.3100 INCHES NOMINAL OVERALL;HEIGHT OF SHACKLE 3.2800 INCHES NOMINAL;2.6900 INCHES NOMINAL OVERALL LENGTH OF PIN;0.72 LBS WEIGHT OF SHACKLE
PART NAME ASSIGNED BY CONTROLLING AGENCY SCREW PIN ANCHOR SHACKLE TYPE S-209
MANUFACTURER POLTEC

Line item 092 (Size)

MATERIAL; STEEL
MATERIAL DOCUMENT AND CLASSIFICATION FF-T-276B,TYPE II FED SPEC ALL MATERIAL RESPONSES
SURFACE TREATMENT ZINC ALLOY
SURFACE TREATMENT DOCUMENT AND CLASSIFICATION HOT DIPPED GALVANIZED
STYLE DESIGNATOR 204 SPLIT OVAL
OVERALL WIDTH 0.9100 INCHES NOMINAL
OVERALL LENGTH 3.5000 INCHES NOMINAL
INSIDE WIDTH 1.3800 INCHES NOMINAL
INSIDE LENGTH 2.2500 INCHES NOMINAL
ACCOMMODATED MATERIAL DIAMETER 0.6250 INCHES NOMINAL
SUPPLEMENTARY FEATURES THIMBLE WILL ACCOMODATE A 5/8 INCH DIAMETER WIRE ROPE;GROOVE WIDTH OF THIMBLE 0.6600 INCHES NOMINAL
PART NAME ASSIGNED BY CONTROLLING AGENCY STANDARD WIRE ROPE THIMBLE G-411 TYPE
MANUFACTURER POLTEC

Line item 093 (Size)
MATERIAL: OVERALL STEEL
SURFACE TREATMENT: GALVANIZED
END STYLE: 201 CLEVIS AND CLOSED EYE
LENGTH: 12.00 INCHES NOMINAL
SPECIAL FEATURES: FOR 0.500 DIAMETER INCH ROPE
END ITEM IDENTIFICATION: TOWER, MILLARD 100 FT, GUYED
MANUFACTURER: MILLARD

Line item 094 (Size)
MATERIAL OVERALL: STEEL
SURFACE TREATMENT: GALVANIZED
END STYLE: 201 CLEVIS AND CLOSED EYE
LENGTH: 12.00 INCHES NOMINAL
SPECIAL FEATURES: FOR 0.625 DIAMETER INCH ROPE
END ITEM IDENTIFICATION: TOWER, MILLARD 100 FT, GUYED
MANUFACTURER: MILLARD

Line item 095 (Size)
STYLE DESIGNATOR: 110 ANCHOR
OPENING WIDTH: 0.750 INCHES NOMINAL
INSIDE LENGTH: 1.69 INCHES NOMINAL
MATERIAL DIAMETER: 0.44 INCHES NOMINAL
LOCKING DEVICE TYPE: PIN
PART NAME ASSIGNED BY CONTROLLING AGENCY: ROUND PIN ANCHOR SHACKLE
MANUFACTURER: POLTEC

Line item 096 (Better description)
SPECIAL FEATURES

FACILITATES UP TO 100 FT TOWER; KIT CONSIST OF 19 ITEMS; INCLUDES RTO-CR07-002 QTY 1; PART NO THS STO50-464 QTY 6; PART NO TC-212 QTY 37 METER; PART NO SQDCHU362DS D 60A DISCONNECT QTY 1 AND ALL ATTACHMENT HARDWARE FOR ANCILLARY ITEMS
MANUFACTURER: RVA CANADA LIMITED

Line item 100 (Better description)
HEIGHT: 100.0 FEET NOMINAL
ASSEMBLY FORM: SECTIONALIZED
SECTION QUANTITY: 10
SHAPE: SQUARE
SPECIAL FEATURES:
STAINLESS STEEL ASSEMBLY BOLTS HAVE FLAT WASHERS UNDER THE HEAD AND NUT OF THE BOLTS;FORMED OF STANDARD SECTIONS THAT ARE ASSEMBLED TO REQUIRED HEIGHTS;SECTIONS ARE SQUARE IN CROSS SECTION AND HAVE 4 VETICAL LEGS LACED TOGETHER WITH A CONTINUOUS LATTICE THAT IS CLAMPED TO VERTICAL LEGS;LEGS AND LATTICE MEMBERS ARE ROUND BAR EXTRUSIONS OF 6061-T6 ALUMINUM;SECTIONS ARE 10 FEET EACH;PARTS LIST AS PER OEM ALPT-0800-0001-M1.
PART NAME ASSIGNED BY CONTROLLING AGENCY: 100FT HIGH MILLARD GUYED TOWER

Q. 2 The specification indicates the 6' MW at 25'/75' respective of the (2) tower heights. The maximum twist/tilt is specified at "30'/60'". Is this a mistake? Should the elevations match?

A.2 Based on the document (AWSS SOW 2016 v3 attached), it state:

Para 1.2.1: The towers will be used at various locations in Canada, including the Arctic, and **shall** support up to7 antennas and one 6 foot microwave dish for a 60 foot tower and up to 11 antennas and one 6 foot microwave dish for the 100 foot tower. The Dish antennas will all be mounted 25 ft/75 ft respectively and the UHF/VHF antennas will be mounted above the dish antenna. Such requirements indicate the minimum functional or technical characteristics considered acceptable.

Para 3.3.3: Twist: The maximum twist at the 30ft/60ft level must not be more than 0.3 degrees for the 60 ft and 100 ft towers.

Q. 3 Wind. We found the highest wind value in Canada was "1230Pa". Is this the value we should use to design both towers? It is very high. The towers will be very heavy.

A. 3 Para 4.1.5 Design: Each AWSS tower shall be constructed with an X or Z brace design and sections shall fit accurately together. Each tower section shall be joined together by bolt assemblies meeting the S37-13 standard. Bidders shall supply a report on test and stress analysis. The design shall include the consideration for Ae mounting brackets and that the brackets shall be up to 1 meter from the face of the tower so that appropriate wind and ice loading shall be considered in the design.

Para 4.1.8 Wind loading: Each Tower shall be designed to meet the wind loading requirements with the UHF/VHF antennas mounted above the micro wave dish and on support arms keeping the antennas 30 inches from the tower.

Para 4.2.1 Climatic Conditions: Each complete AWSS tower shall operate under the climatic conditions as detailed in the CSA Standard S37-13 for all areas of Canada.

Towers should be designed for the worst case scenario, Nova Scotia in an ice storm.

Q. 4 Do we confirm a price for mounting towers and the foundation? If so, will there be another bid solicitation for this type of work?

A. 4 No, the structures will be installed by a team of lineman (military).

Q. 5 Will there be towers to be dismantle?

A.5 No.

All remaining terms and conditions remain unchanged.

SPECIFICATION

FOR

60 & 100 FOOT

AWSS SELF-SUPPORT

COMMUNICATIONS

TOWERS

Friday, October 28, 2016

1.0 SCOPE

1.1 General

1.1.1 This specification establishes the general requirements of the Department of National Defence (DND) for the supply of 60 and 100 foot all welded solid steel self support (AWSS) communications towers for use at various DND Facilities across Canada.

1.2 INTENDED USE

1.2.1 The towers will be used at various locations in Canada, including the Arctic, and shall support up to7 antennas and one 6 foot microwave dish for a 60 foot tower and up to 11 antennas and one 6 foot microwave dish for the 100 foot tower. The Dish antennas will all be mounted 25 ft/75 ft respectively and the UHF/VHF antennas will be mounted above the dish antenna. Such requirements indicate the minimum functional or technical characteristics considered acceptable.

1.3 Description

1.3.1 The towers shall be AWSS self supporting and each shall consist/include the following:

a. AWSS tower sections;

b. AWSS base section;

c. nuts, bolts, washers and bolt assemblies;

d. Night Vision Goggle (NVG) approved lighting kit, cable, installation brackets and disconnect switch fitted with an external 30A GFI outlet;

e. tower grounding kit;

f. 15 ft wave guide bridge; and

g. Foundations material to include 2 x templates, L7 rods and other material for a earth foundation; and

h. drawings and documentation in both hard copy with the tower and electronic sent to the technical authority.

2.0 APPLICABLE DOCUMENTS

2.1 DOCUMENTS

2.1.1 The following documentation form part of this specification where the latest issue in effect on date of request for proposal shall apply is applicable to this project:

a CSA S37-13 Antennas, Towers and Antenna Supporting Structures (or latest issue); and

b CAR 621 Standard; and

c CSA Z259 Series on Fall Protection.

3.0 GENERAL REQUIREMENTS

3.1 GENERAL

3.1.1 This specification is written with specific intent of procuring equipment of a proven design, which is readily available.

3.2 MATERIALS, PARTS and PROCESSES

3.2.1 All materials, parts and processes shall conform to the CSA Standard S37-13 (or latest issue) relating to the type and class of equipment described herein.

3.3 TOWER REQUIREMENTS

3.3.1 AWSS 60 Ft: Each tower as a minimum shall be capable of supporting the following:

a. two (2) Sinclair SRL-110 antennas;
b. two (2) Sinclair SRL-210C2 antennas;
c. one (1) Sinclair SRL-210C4 antenna;
d. one (1) Rhode & Schwartz HK014 antenna;
e. one (1) Valcom AS-5003 antenna;
f. one (1) six foot Andrew HP6-220A microwave dish;
g. one (1) double globe LED NVG compliant obstruction lighting kit;
h. one (1) air terminal; and
i. coaxial cable, type LDF4/50, or equivalent, for all antennas;

3.3.2 AWSS 100 Ft: Each tower as a minimum shall be capable of supporting the following:

a. three (3) Sinclair SRL-110 antennas;
b. four (4) Sinclair SRL-210C2 antennas;
c. one (1) Sinclair SRL-210C4 antenna;
d. two (2) Rohde & Schwartz HK014 antennas;
e. one (1) Valcom AS-5003 antenna;
f. one (1) Andrew HP6-220A six foot microwave dish;
g. one (1) double globe LED NVG compliant obstruction lighting kit;
h. one (1) air terminal; and
i. coaxial cable, type LDF 4/50, or equivalent, for all antennas.

3.3.3 Twist: The maximum twist at the 30ft/60ft level must not be more than 0.3 degrees for the 60 ft and 100 ft towers.

4 TECHNICAL SPECIFICATIONS

4.1 TOWER SPECIFICATIONS

4.1.1 Construction: Each tower shall be open triangular or square construction produced from galvanized solid round high strength steel or hot dip galvanized solid round high strength steel. The total height of the tower shall be 60 or100 feet.

4.1.2 Tower foundation Base The design of the tower foundation shall be provided for each tower shall be such that it can be used in anywhere in Canada and shall support the proposed tower with the antenna configuration described in Sections 3.3.1/3.3.2. A concreate and rock foundation design shall be provided for all towers and shall detail all required material required for both type of installations.

4.1.3 Identification and Markings: An engraved metal plate permanently attached on the lowest tower section of each tower shall identify that the tower is owned by the Department of National Defence, NATO Stock code (5445-20-003-8420 for the 100ft tower & 5445-20-003-8661 for the 60ft tower) the Technical Authority is the DND Antenna Structure LCMM, manufacturer, the type of tower and date of manufacture. The lettering on this plate shall be a minimum of one (1) cm in height. In addition bi-lingual warning signs prohibiting climbing shall be provided. See below example.

This Tower is owned by The Department of National Defence
NSN 5445-20-003-xxxx
Technical Authority- DND Antenna Support Structure LCMM
Manufacture and Date- xxxxxx
Contract xxxxxx
This tower shall only be climbed after receiving permission from the Technical Authority

4.1.4 The tower shall be delivered to final location strapped together in 10ft sections, with cloth cargo straps or other strapping so as not to damage any painted surfaces. The foundation, obstruction lighting and other material must be strapped internally to the tower sections ready for shipping. The entire tower shipments must be shipped on heavy duty wooded pallets or similar strong material.

4.1.5 Design: Each AWSS tower shall be constructed with an X or Z brace design and sections shall fit accurately together. Each tower section shall be joined together by bolt assemblies meeting the S37-13 standard. Bidders shall supply a report on test and stress analysis. The design shall include the consideration for Ae mounting brackets and that the brackets shall be up to 1 meter from the face of the tower so that appropriate wind and ice loading shall be considered in the design.

4.1.6 Interchangeability: All like units, assemblies, sub-assemblies and replaceable parts shall be physically and functionally interchangeable without modification of such items or of the equipment.

4.1.7 Defects: The tower and or any assembly, sub-assembly, or replaceable part shall be free from defects when subjected to a visual and mechanical inspection.

4.1.8 Climbing: Each tower shall be designed to ensure that it is safe for climbing by two trained and competent personnel. Each tower shall be equipped with an extended ladder or horizontal cross-member construction to facilitate climbing IAW CSA S37-13 (or latest version).

4.1.8 Wind Loading: Each Tower shall be designed to meet the wind loading requirements with the UHF/VHF antennas mounted above the micro wave dish and on support arms keeping the antennas 30 inches from the tower.

4.2 OPERATING CONDITIONS

4.2.1 Climatic Conditions: Each complete AWSS tower shall operate under the climatic conditions as detailed in the CSA Standard S37-13 for all areas of Canada.

4.2.2 Humidity: Each tower shall sustain no corrosion or deterioration which could prevent it from meeting operational, service or maintenance requirements when subjected to a warm, highly humid atmosphere or prolonged exposure to a salt-sea atmosphere.

4.2.3 Water Run-off: All tower members shall be designed to prevent water from becoming trapped and bursting the tubes during frigid weather when the tower is in use or in a stored condition.

4.3 ANCILLARIES

4.3.1 Lighting Kit: The Lighting Kit shall be in accordance with CAR 612 Standard and CSA Standard S37-13 and shall utilize NVG certified Red LED obstruction light, Teck 90 cable, mounting hardware and 60A disconnect box with external GFI for maintenance tools. An acceptable product is STS-RTO-TP1-Kit.

4.3.2 Lightning Protection: Each tower structure shall be provided with reliable lightning protection that shall take the form of direct secure grounding. Each leg of the tower shall be securely grounded.

4.3.3 Mounting Brackets and Clamps: Tower Parts List shall include a supplied quantity of clamps and mounts for types of antennas identified and universal mounts for Microwave dishes. All clamps and brackets shall be universal and nature. The provided clamps and mounts shall also be provided in a list format.

4.3.4 Markings: Each tower shall be painted in accordance with Transport Canada CAR 621 Standard.

4.4 DOCUMENTATION

4.4.1 Prior to delivery of the first tower, complete specifications, drawings, equipment lists and installation procedures shall be submitted to the TA in hard copy and electronic format:

Thereafter, one set of manuals shall be enclosed and shipped with each tower.

C-53-414-000/MS-001

LOG PERIODIC

Bytown Marine

820-6910

hy-gain®

AS-3098/U

INSTRUCTION MANUAL

Antennas, Towers and Accessories for Commercial, Industrial, Military and Private use.

ANTENNA SYSTEM 1112MR

4 to 30 MHz
Log Periodic Antenna

TELEX® hy-gain®
TELEX COMMUNICATIONS, INC.
8601 East Cornhusker Highway, Lincoln, NE 68505, U.S..A.

PN 801875-1

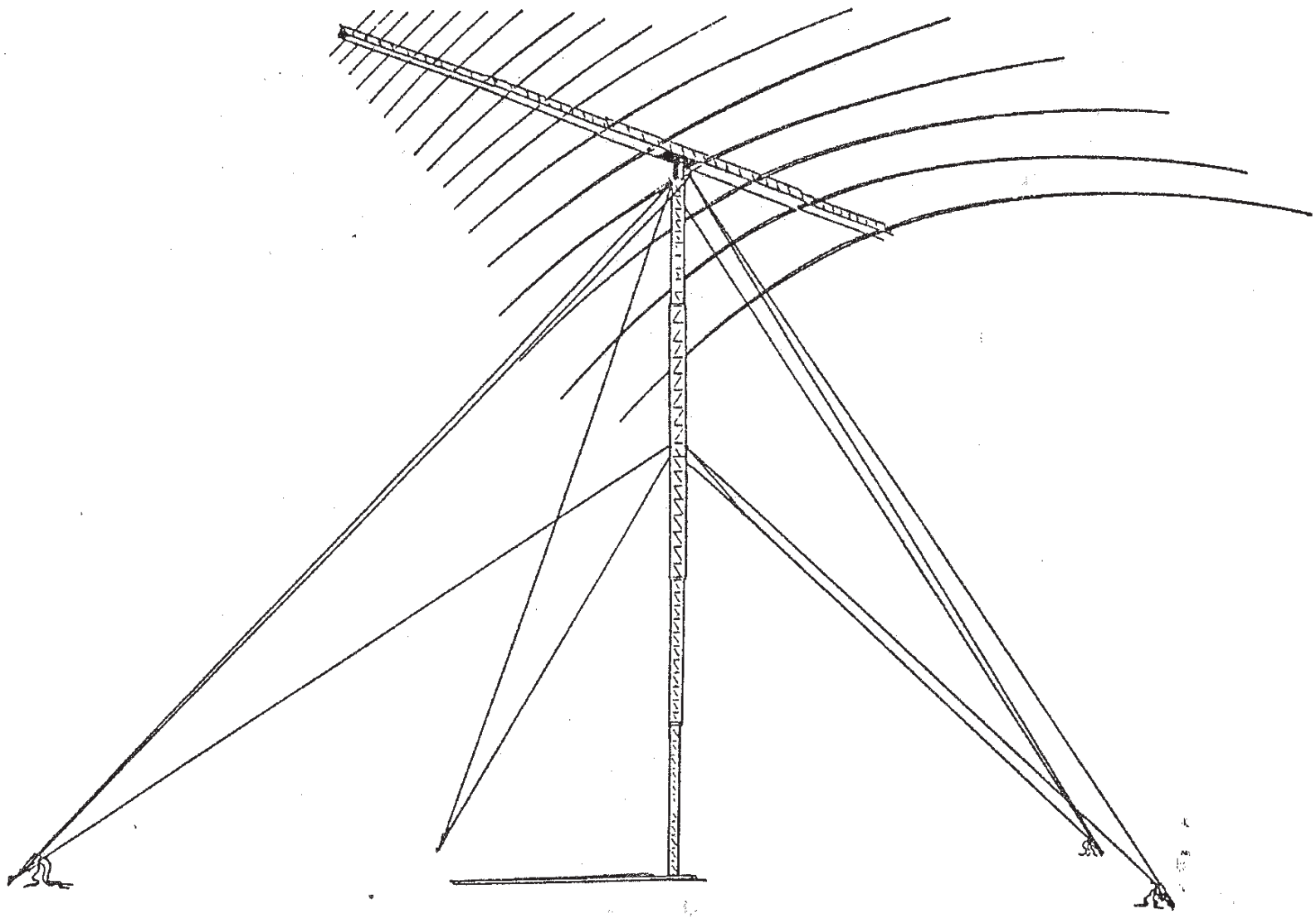

Figure 1-1
Overall View

TABLE OF CONTENTS

CHAPTER 1. INTRODUCTION

		Page
Section I	General	1
Section II	Description and Data	2

CHAPTER 2. SERVICE UPON RECEIPT AND INSTALLATION

Section I	System Planning	4
Section II	Service Upon Receipt of Material	6
Section III	Installation Instructions	12
Section IV	Preliminary Adjustment of Equipment	79

CHAPTER 3. OPERATING INSTRUCTIONS

Section I	Operation Under Usual Conditions	80
Section II	Operation Under Emergency or Unusual Conditions	81
Section III	Preparation for Movement	82

CHAPTER 4. OPERATOR/CREW MAINTENANCE INSTRUCTION

Section I	Instructions, Tools and Lubrication	85
Section II	Preventative Maintenance Checks and Services	86
Section III	Troubleshooting	88

CHAPTER 5. ORGANIZATIONAL, DIRECT SUPPORT AND GENERAL SUPPORT MAINTENANCE INSTRUCTIONS

Section I	Tools, Maintenance and Repainting Instructions	90
Section II	Lubrication Instructions	91
Section III	Preventative Maintenance Checks and Services	92
Section IV	Troubleshooting and Repair	93

CHAPTER 6. FUNCTIONING OF EQUIPMENT

Functioning of Equipment 95

CHAPTER 7. OPERATION OF EQUIPMENT USED IN CONJUNCTION WITH THE MAJOR ITEM

Operation of Equipment used in Conjunction with Major Item .. 97

CHAPTER 8. PARTS LIST

Parts List 98

LIST OF ILLUSTRATIONS

Figure		Page
1-1	Overall View of Antenna System	A
2-1	Individual Component Containers	9
2-2	System Component Containers in Shipping Frame	10
2-3	Clearing Vegetation	12
2-4	Installing Base Plate Assembly	14
2-5	Concrete Base Installation	14
2-6	Plot Plan	16
2-7	Anchor Locations	17
2-8	Normal Anchor Installation	17
2-9	Anchor Installation for Sand or Marsh	18
2-10	Layout of Tower Sections	20
2-11	Tower Section and Stacking Arrangement	21
2-12	Attaching Tower Base Section to Tower Base Plate	22
2-13	Cable Attachments to Tower	24
2-14	Lower Tower Guy Assemblies	25
2-15	Gin Pole Assembly	26
2-16	Gin Pole Top Plate and Cable Arrangement	27
2-17	Turnbuckles to Anchors	28
2-18	Placement of Rotator on Top of Tower	30
2-19	Upper Guy Identification	31
2-20	Pulling Cable	32
2-21	Cable and Gin Pole Arrangement Prior to Erection	33
2-22	Griphoist Identification and Attachment	34
2-23	Lifting Gin Pole	36
2-24	Guy Attachments to Tower Before Erection	37
2-25	Checking Side Guy Tension	39
2-26	Locking Front Tower Leg to Base Plate Assembly	41
2-27	Griphoist Disconnect	42
2-28	Lower Guy Configuration	43
2-29	Upper Guy Configuration	44
2-30	Griphoist Connect	46
2-31	Assembly of Antenna Boom Sections	47
2-32	Raising Tower to Allow Insertion of Boom Under Tower	49
2-33	Rotator Attachment to Boom and Saddle Block Attachment	50
2-34	Attachment of Boom Extension to Boom	51
2-35	Locating Element Center Insulator Assemblies on Boom	52
2-36	Securing Element Center Insulator Assemblies to Boom	53
2-37	Feedline and Coax Connections to Balun (See Chapter 9)	54
2-38	Threading Feedline Below and Above Center Insulators	55
2-39	Attaching Feedline to Boom Plate	56
2-40	Feedline Cable Alternately Attached to Center Insulators	57
2-41	Fastening Feedline Cable to Center Insulator	58
2-42	Element Splice Coding	60
2-43	Element Splice Tightened and Completed Splice	63
2-44	Element Lengths	64

LIST OF ILLUSTRATIONS - Continued

Figure		Page
2-45	Coax Identification and Routing	65
2-46	Rope Identifications	66
2-47	Threading Rotator Stop Rope Through Tower	67
2-48	Attaching Rotator Stop Rope to Rotator	69
2-49	Hinge Plate Release	70
2-50	Tag Lines to End of Boom	71
2-51	Antenna and Tower Prior to Erection	72
2-52	Laying Out Upper Back Guy Prior to Erection	73
2-53	Keeping Antenna System in Line with Gin Pole and Pulling Cable	75
2-54	Initial Raising of Antenna System	76
2-55	Preparing to Latch Antenna to Tower	77
2-56	Raising of Antenna System	78
6-1	Schematic Diagram of Antenna System	96
9-1	Feedline and Coax Connections to Balun	103
9-2	Tower Grounding	104

Section II. DESCRIPTION AND DATA

1-2. Purpose and Use.

NOTE: The National Bureau of Standards has officially adopted the term Hertz for cycles per second; therefore, megahertz (MHz) represents megacycles.

a. Antenna System 1112MR consists of a five section collapsible tower structure on which is attached a rotatable five section antenna boom containing 17 elements. This antenna operates over frequency range of 4 to 30 MHz. The entire system is a semi-quick erectable unit which can be assembled and erected by 4 men in approximately 4 hours. All tools required for assembly and erection are supplied with this antenna.

b. The 1112MR is a unidirectional, high frequency, log periodic antenna. It exhibits extremely wide band operation characteristics within design frequencies in conjunction with the capability of quickly and easily changing the operating azimuth or frequency.

1-3. Technical Characteristics.

Longest Element	95' 11" (29.235m)
Boom Length	62' (18.89 m)
Number of Elements	17
Transportability	Can be shipped by any mode of transportation in factory cartons.
Storage Conditions	No special requirements
Input Connector (balun)	Type LC 50 ohms
Tower Height	60' (18.28 m)
VSWR	2.5 to 1 or less
Frequency Range	4 to 30 MHz continuous
Power Handling Capability	
Average	7.5 kw
Peak	10 kw
Polarization	Horizontal
Maximum Wind (no ice)	80 mph
Installation Area	165' x 125' (50.29 x 38.10 m)
Forward Gain	11.5 dBi 6-30 MHz

1-4. Items Comprising Operable Equipment.

This equipment consists of one item, Antenna System 1112MR This system is shipped complete with all assembly tools and hardware furnished. For a complete breakdown of all components with contents of the four equipment boxes, refer to Table 2-2.

CHAPTER 1

INTRODUCTION

Section I. GENERAL

1-1 Scope

a. This manual describes antenna system 1112MR and covers its installation and maintenance.

b. Throughout this manual, the use of "man" or "men" should not be construed to limit the instructions to males only.

Section II. DESCRIPTION AND DATA

1-2. Purpose and Use.

NOTE: The National Bureau of Standards has officially adopted the term Hertz for cycles per second; therefore, megahertz (MHz) represents megacycles.

a. Antenna System 1112MR consists of a five section collapsible tower structure on which is attached a rotatable five section antenna boom containing 17 elements. This antenna operates over frequency range of 4 to 30 MHz. The entire system is a semi-quick erectable unit which can be assembled and erected by 4 men in approximately 4 hours. All tools required for assembly and erection are supplied with this antenna.

b. The 1112MR is a unidirectional, high frequency, log periodic antenna. It exhibits extremely wide band operation characteristics within design frequencies in conjunction with the capability of quickly and easily changing the operating azimuth or frequency.

1-3. Technical Characteristics.

Longest Element	95' 11" (29.235m)
Boom Length	62' (18.89 m)
Number of Elements	17
Transportability	Can be shipped by any mode of transportation in factory cartons.
Storage Conditions	No special requirements
Input Connector (balun)	Type LC 50 ohms
Tower Height	60' (18.28 m)
VSWR	2.5 to 1 or less
Frequency Range	4 to 30 MHz continuous
Power Handling Capability	
Average	7.5 kw
Peak	10 kw
Polarization	Horizontal
Maximum Wind (no ice)	80 mph
Installation Area	165' x 125' (50.29 x 38.10 m)
Forward Gain	11.5 dBi 6-30 MHz

1-4. Items Comprising Operable Equipment.

This equipment consists of one item, Antenna System 1112MR This system is shipped complete with all assembly tools and hardware furnished. For a complete breakdown of all components with contents of the four equipment boxes, refer to Table 2-2.

1-5. Description of Antenna.

a. The antenna has been constructed in accordance with the principles of a logarithmically periodic antenna structure. The structure consists of a series of dipole elements tapered in length and arranged in the proper spacing in accordance with latest design principles. The antenna and its feedline are supported by an all aluminum boom structure which consists of three parallel aluminum forms securely latticed together with heavy gauge aluminum crossbars and brackets. The elements are all step-tapered to provide minimum wind loading. All hardware and mounting brackets are either high strength aluminum or stainless steel.

b. The rf is fed to the dipole by two copper cables extending the full length of the boom and spaced at the proper distance to provide the optimum impedance. The rf feedline is fed by a balun with a 50 ohm input connector (Type LC).

1-6. Description of Tower.

a. The 60' collapsible five section tower structure is supplied complete with guy wires, base plate and guy anchors.

b. The system is supplied with a gin pole to aid in tower erection through the use of a griphoist, pulley and cable. Special equipment needed for erection of the tower is not required.

CHAPTER 2

SERVICE UPON RECEIPT AND INSTALLATION

WARNING

The antenna system must be installed as far away from powerlines as possible. A distance at least equal to twice the height of the tower must be maintained between the tower and the powerline. Failure to observe these precautions may result in death or serious injury to personnel.

Section I. SYSTEMS PLANNING

2-1. Equipment Used.

This equipment is shipped complete and requires only a connection to a transceiver that operates in the 4 to 30 MHz range. The transceiver can be set any distance from the antenna structure where the length of feedline will permit.

2-2. Site Selection.

a. The 1112MR requires an area of 125 feet wide by 165 feet long (38.1 x 50.29 m) for proper installation. The site selected should be free from any surrounding objects. A favorable location would be a flat, level area that is free from trees, large rocks, or powerlines of any sort.

WARNING

The tower base assembly MUST be installed perfectly level.

b. The soil must be firm enough to hold the tower guy wire anchors. If the antenna is placed on a sloping surface, the guy anchoring should be adjusted. Soil conditions around the antenna foundation should allow access to the antenna during all weather conditions.

2-3. Shelter Requirements.

a. This equipment will be used in an outside environment at all times, therfore, shelter requirments during use of the equipment is limited to only the individual component boxes if so desired.

b. This antenna system requires no special storage requirements while not being operated and can set in any shelter or in the out-of-doors as long as the packaged system will not become damaged from falling objects or in any way suffer damage from moving objects.

c. The total weight of the system when packaged is 2,185 pounds. The building floor must be able to hold this capacity plus the weight of a mechanical truckster or similar equipment used to move the equipment.

Section II. SERVICE UPON RECEIPT OF MATERIAL

2-4 Unpacking

a. Antenna System 1112MR needs no special packing other than what is supplied. To conserve space, smaller items may be placed inside larger items.

b. This antenna system requires no special handling. However, care should be taken to insure against any damage to the smaller element assemblies and to insure that the rotating mechanism is not dropped or handled in any way to misalign or damage the rotating shaft and bearings. Table 2-1 gives the weight of all major assemblies shown in Figure 2-1. Table 2-2 lists the contents of each of the four equipment boxes listed in Figure 2-1.

Unit	Weight (lb.)	Dimensions (in.)			Volume (cu. ft.)
		Width	Height	Length	
Large Accessory Box	300	25	12	75	13
Small Accessory Box	336	25	12	39	6.8
Large Element Box	376	25	12	143	24.8
Small Element Box	212	25	12	114	19.8
Gin Pole Sections	117	15	8	133	9.2
Rotator Assembly	160	21	24	29	8.5
Front Nested Boom Assembly	132	19	16	142	25
Rear Nested Boom Assembly	100	19	16	142	25
Lower Nested Tower Assembly	168	19	16	142	25
Upper Nested Tower Assembly	110	19	16	142	25
Crate Assembly	174	42	53	144	185.5
Total System	2185 lbs	42"	53"	144"	367.6 cu. ft.

Table 2-1. Weights of Major Units

Item No.	Description	Qty
96	Large Element Box Contents:	
56	Center Insulator Assembly #13	1
57	Center Insulator Assembly #14	1
67	Section 2 of Element 8	2
78	Section 3 of Element 13	2
80	Section 2 of Element 14	2
81	Section 3 of Element 14	2
82	Section 4 of Element 14	2
89	Section 4 of Elements 16 & 17	4
87	Section 2 of Elements 16 & 17	4
72	Section 2 of Element 11	2
83	Section 2 of Element 15	2
84	Section 3 of Element 15	2
85	Section 4 of Element 15	2
88	Section 3 of Elements 16 & 17	4
75	Section 3 of Element 12	2
86	Section 5 of Element 15	2
90	Section 5 of Elements 16 & 17	4
44	Center Insulator for Element #1	1
51	Center Insulator for Element #8	1
50	Center Insulator for Element #7	1
59	Center Insulator for Element #16	1
60	Center Insulator for Element #17	1
95	Small Element Box Contents:	
53	Center Insulator for Element #10	1
54	Center Insulator for Element #11	1
55	Center Insulator for Element #12	1
45	Center Insulator for Element #2	1
46	Center Insulator for Element #3	1
47	Center Insulator for Element #4	1
48	Center Insulator for Element #5	1
49	Center Insulator for Element #6	1
52	Center Insulator for Element #9	1
62	Section 2 of Element #3	2
63	Section 2 of Element #4	2
64	Section 2 of Element #5	2
65	Section 2 of Element #6	2
77	Section 2 of Element #13	2
66	Section 2 of Element #7	2
79	Section 4 of Element #13	2
68	Section 2 of Element #9	2
69	Section 3 of Element #9	2
70	Section 2 of Element #10	2
71	Section 3 of Element #10	2
73	Section 3 of Element #11	2
74	Section 2 of Element #12	2
76	Section 4 of Element #12	2
61	Section 2 of Element #2	2
58	Center Insulator for Element #15	1

Table 2-2 Parts Supplied for Antenna System 1112MR

Item No.	Description	Qty
98	Large Accessory Box Contents:	
132	Rope, 5/32 Polyethylene, 40'	1
18	Boom Extension	1
24	Base Plate	1
35	Screw Anchors	6
36	Large Stake Anchors (Elephant Anchors)	6
29	Base Plate Anchors	4
107	Anchor Driving Bar	1
37	Lower Guy Assembly	1
23	Tag Lines	2
39	Lower Front Guy Assembly with Turnbuckle	1
118	Knee Brace Cable Assembly with Turnbuckle	1
17	Boom Splicing Pin Assembly	3
30	Concrete Plate	4
34	Gin Pole Top Plate Assembly	1
111	U-Bolt with nuts (stiffener attachment)	36
112	Split Lockwasher	72
19	Balun	1
139	Spark Gap Asssembly, short	1
140	Spark Gap Assembly, Long	1
22	Rotator Rope Assembly	1
97	Small Accessory Box Contents:	
31	Concrete Base Bolt	4
40	Upper Guy Assembly w/Turnbuckle	2
41	Griphoist and cable	1
102	Wrench, 9/16" open end	2
104	Wrench, 1 1/8" open end	2
105	Screwdriver, 1/4" x 6"	2
106	Sledge hammer, 8lbs	1
108	Nut driver, 7/16"	3
151	Tape measure, English/metric 100/30m	1
43	Pulling Cable	1
21	Hinge Plate Rope Assembly	1
42	Tackle Block	1
109	Boom Saddle block	6
110	Tower Joint Stiffner	9
94	Crate Assembly	1
14	Boom Sections, Back Nested	1
9	Boom Sections, Front Nested	1
32	Gin Pole Assembly, Lower	2
33	Gin Pole, Upper	2
5	Tower Section, Lower Nested	1
1	Tower Section, Upper Nested	1
20	Rotator Assembly	1
99	Gin Pole Bracket (Swivel)	1
100	Gin Pole Bracket Pin	1
101	Gin Pole Bracket	1

Table 2-2. Parts Supplied for Antenna System 1112MR - Continued

c. This system may be shipped by any means of transportation. If a front loader or fork lift is used, exercise care when unloading the equipment. Do not allow any of the skids to fall or be damaged in any way. Do not start unloading the system until all metal bands, chains and other fastening devices are removed. Three lift rings are provided on each side of the shipping crate for use when unloading the crate with crane and cables. Figure 2-2 shows all major assemblies to the shipping crate. When using a fork lift to unload the system, place the forks as far apart as possible and lift the system at the location shown. Extension brackets may be required on the forks to avoid damaging any of the lower components.

d. The equipment is packed in one master crate which contains the tower and boom sections, gin pole, rotator and four equipment boxes. These original crates should be stored for any future reshipment needs. Care should be taken when handling to prevent damage.

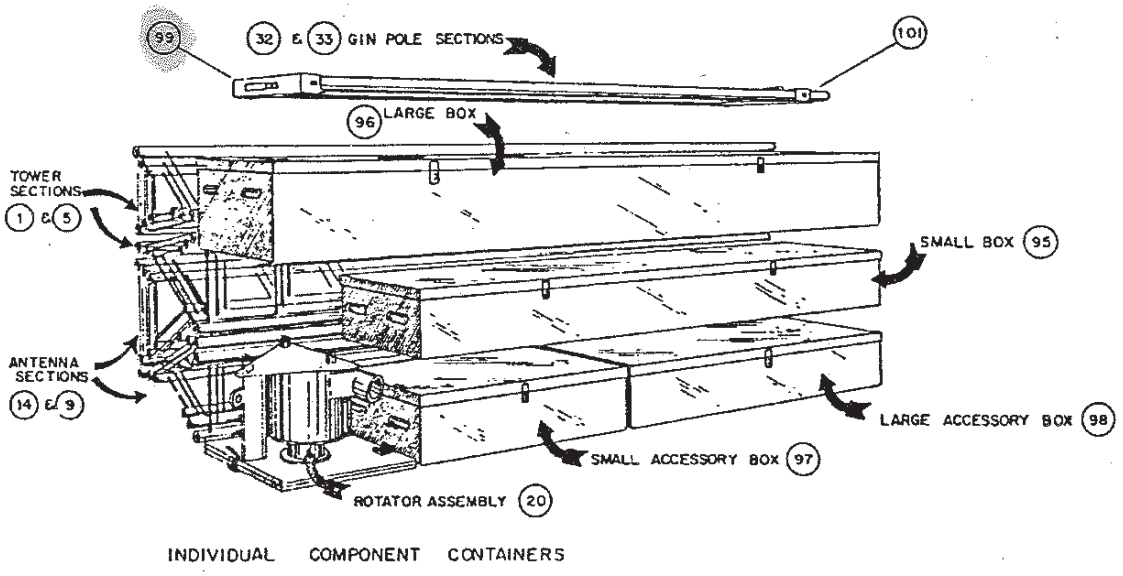

Figure 2-1
Individual Component Containers

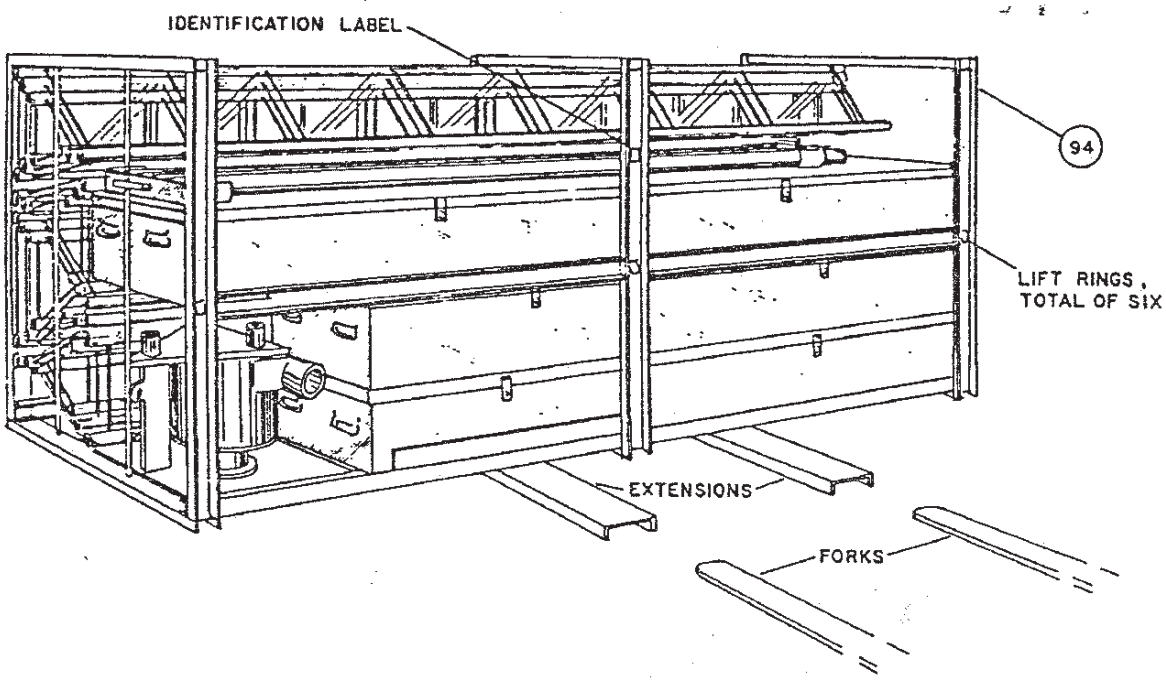

Figure 2-2
System Component Containers

CAUTION

When unpacking, uncrating, unloading, installing, erecting, or in any other way handling the equipment for the Antenna System 1112MR, protective head gear such as hard hats shall be worn at all times. Steel toed shoes and other protective clothing shall be used as directed by the person or persons responsible for the assembly and erection procedures of this antenna system. This antenna system is designed to meet all applicable Occupational Safety and Health Act Requirements.

2-5. Checking Unpacked Equipment.

a. Inspect the equipment for damage incurred during shipment. If the equipment has been damaged, report the damage to your shipper immediately.

b. Check the equipment against the component listing in Tables 2-1 and 2-2 and the packing slip to see if the shipment is complete.

c. For dimensions, weights and volume of packaged items, see Table 2-1.

Section III. INSTALLATION INSTRUCTIONS

2-6. Tools and Equipment.

Tools and materials required for installation are listed in Table 2-3. Test equipment is not required for installation.

2-7. Base Plate Installation.

a. After selecting the site and the position for the base plate, prepare the site by removing all vegetation and/or sod. This area should be slightly larger than the base plate assembly or 2 feet by 6 feet (.60 x 1.82 m). Refer to Figure 2-3.

NOTE:
When removing vegetation at the proposed tower base location, check the exposed earth with a level. Get the earth as level as possible by removing small amounts from the top, not by adding loose fill.

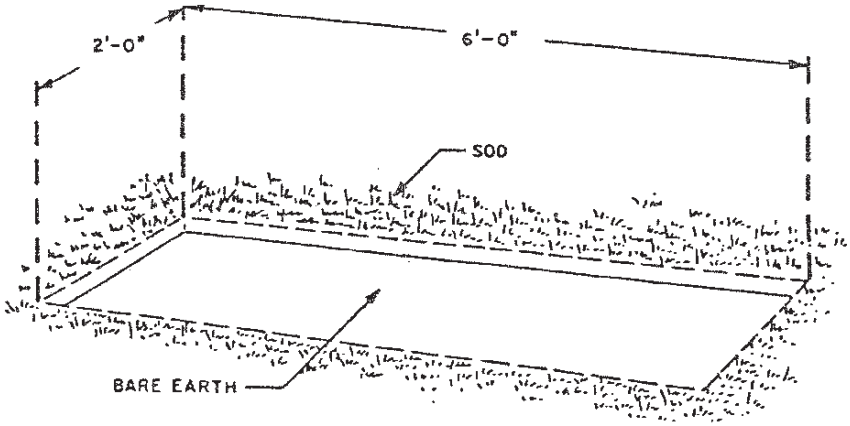

Figure 2-3
Clearing Vegetation

A. Items Supplied

Description	Use	Qty
Sledge Hammer	Anchor Placement	1
"T" Handle Nut Drive 7/16	Element Assembly	3
Wrench 9/16"	Boom-to-Rotator Attachment	1
Wrench 1 1/8"	Adjusting Rotator Drag	2
Drive Bar	Anchor Installation	1
Screwdriver	Antenna Assembly	2

B. Items Not Supplied

Description	Use	Qty
Hand Shovel	Ground Preparation	1
Pliers	Various Uses	2
Carpenters Level	Level Base and Plumb Tower	1
*Gloves, Workmans	Hand Protection	*
*Hard Hats	Head Protection	*

*For Each Person

Table 2-3. List of Tools

b. After the sod has been removed, use a flat or round nosed shovel to remove the earth to a depth of approximately 2 inches (5 cm). If the ground is not level, make adjustments in the depth. At no time should the adjusted depth be more than 4" (10.16 cm). If the ground cannot be leveled by adjusting to the 4" depth, consider moving to a more favorable area.

c. Remove the base plate assembly and base plate anchors form the large accessory box.

d. Position the base plate in the prepared area and secure by driving the base plate pin into the ground through the anchor holes provided in the base plate. Refer to Figure 2-4. Constantly check the base plate with a level to insure that it remains level. Anchor bolts and plates are provided for use in a concrete tower base if this is desired for a more permanent installation site. Figure 2-5 shows the layout for a concrete base.

NOTE: Permanent installation site does not mean that the system may be erected and left unattended for long periods of time. Due to the system's quick erectable and transportable features, it should be lowered weekly for inspection of all structural connections and hardware.

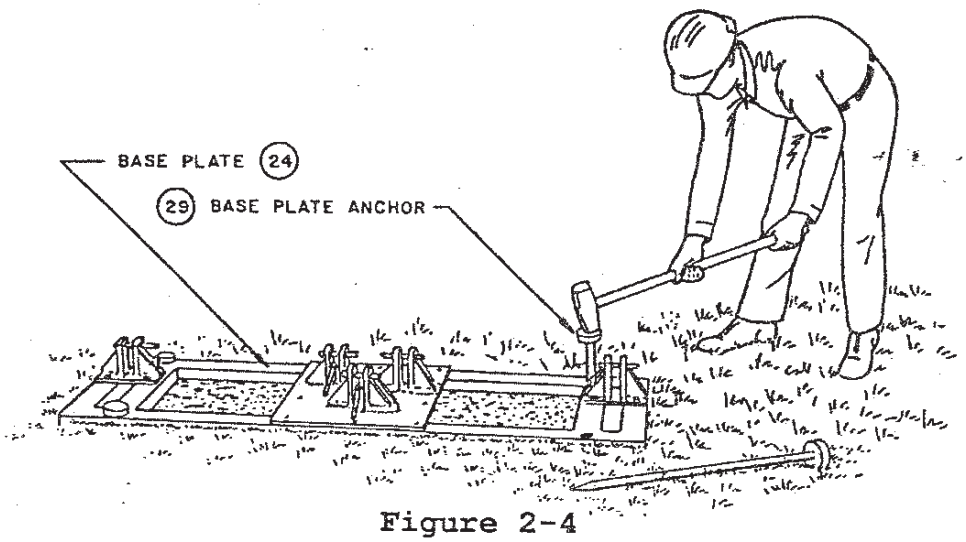

Figure 2-4
Installing Base Plate Assembly

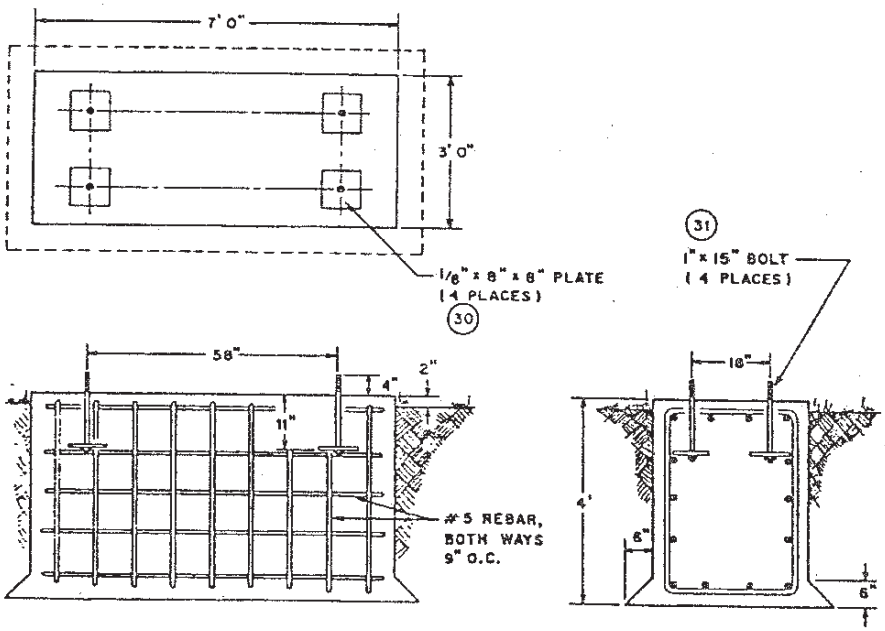

Figure 2-5
Concrete Base Installation

NOTE: Care should be taken when positioning and anchoring the base plate assembly that the tower can be assembled and erected without interfering with any over-hanging objects.

2-8. Guy Anchor Placement.

a. Lay out the guy anchors with respect to the base plate. This antenna system is supplied with a four-way guying system. With this system, the side guys are also the erection guys, eliminating the need to locate extra guy anchors for erection purposes and repositioning the erection guys after erection.

b. Locate the four guy anchors, 50 feet $\pm$ 1 foot (15.24 m $\pm$ 30 cm) from the center of the base plate, at 90° intervals around the base plate. Refer to Figures 2-6 and 2-7 for aid in locating these guy anchors. Use the rotator rope assembly for aid in laying out the 50 foot dimension.

c. Measure out 65' (19.81 m) toward guy anchor #1 from the center of the base plate. Mark this point (stake #7). Locate the two erection hoist anchors, #5 and #6, 2 feet (.60 m) on each side of this stake as shown in Figure 2-6. Refer to Table 2-4 to select the proper guy anchor for the soil conditions which exist at the site. Large stake anchors, and single-plate helix screw-in type anchors are provided with the system. Figure 2-8 shows the proper installation of the anchors provided.

d. When soil conditions are extremely sandy or muddy, special anchoring is required. Figure 2-9 shows the proper installation for these conditions. The material required will be procured from local supply channels.

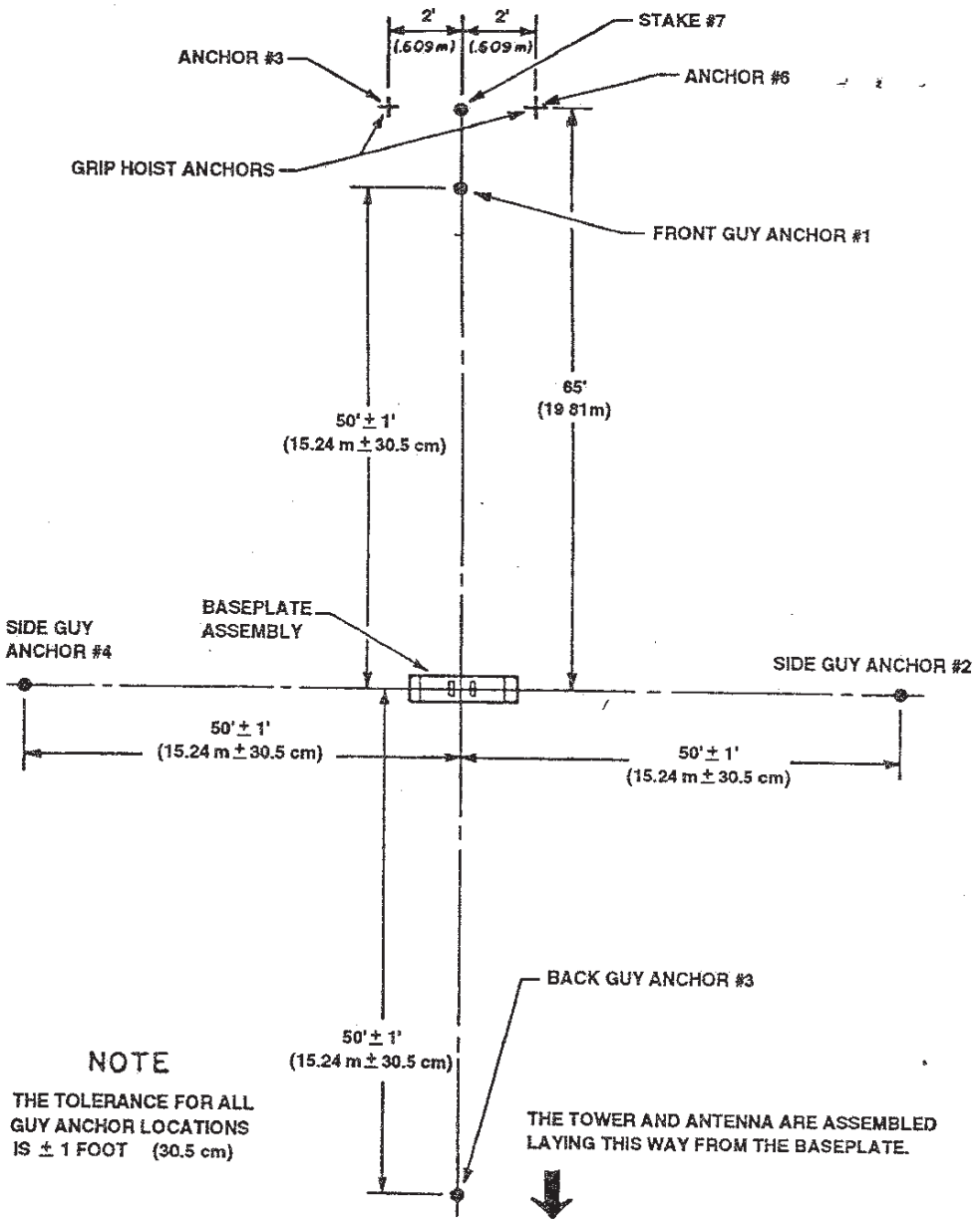

Figure 2-6
Plot Plan

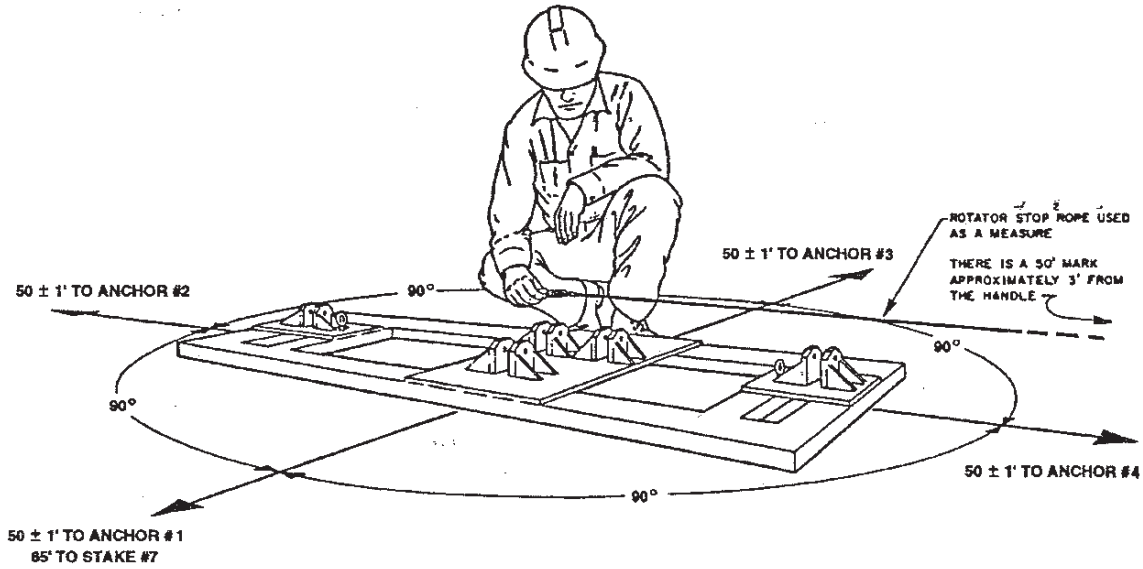

Figure 2-7
Anchor Locations

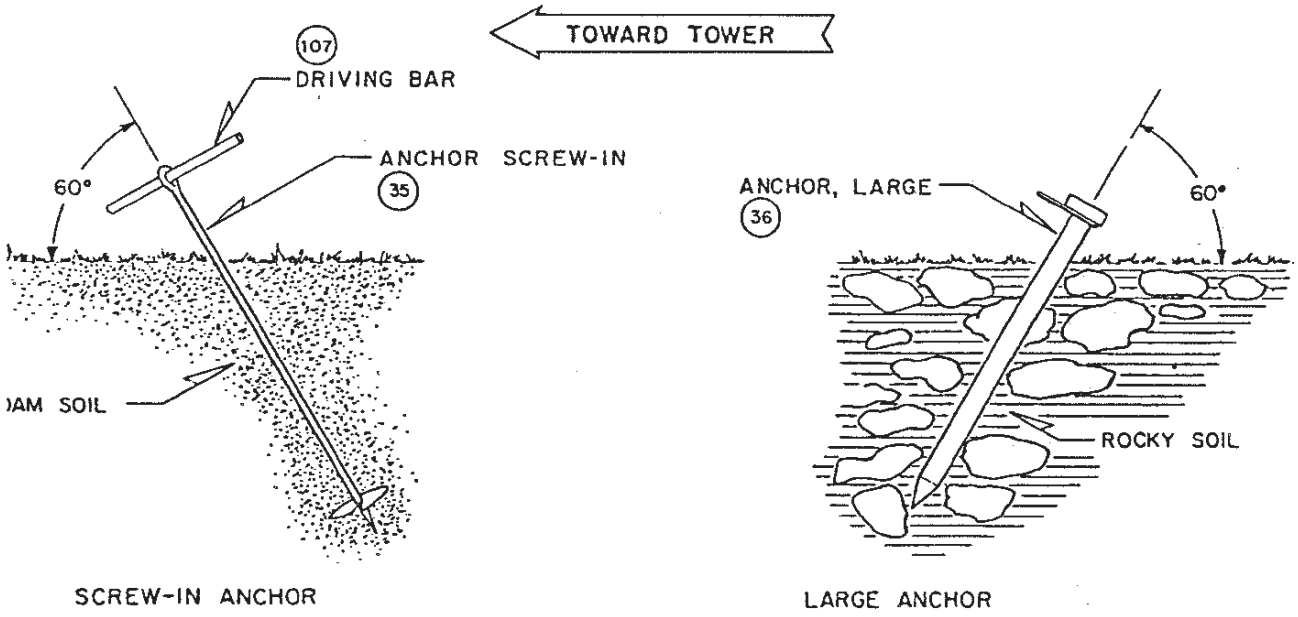

Figure 2-8
Normal Anchor Installation

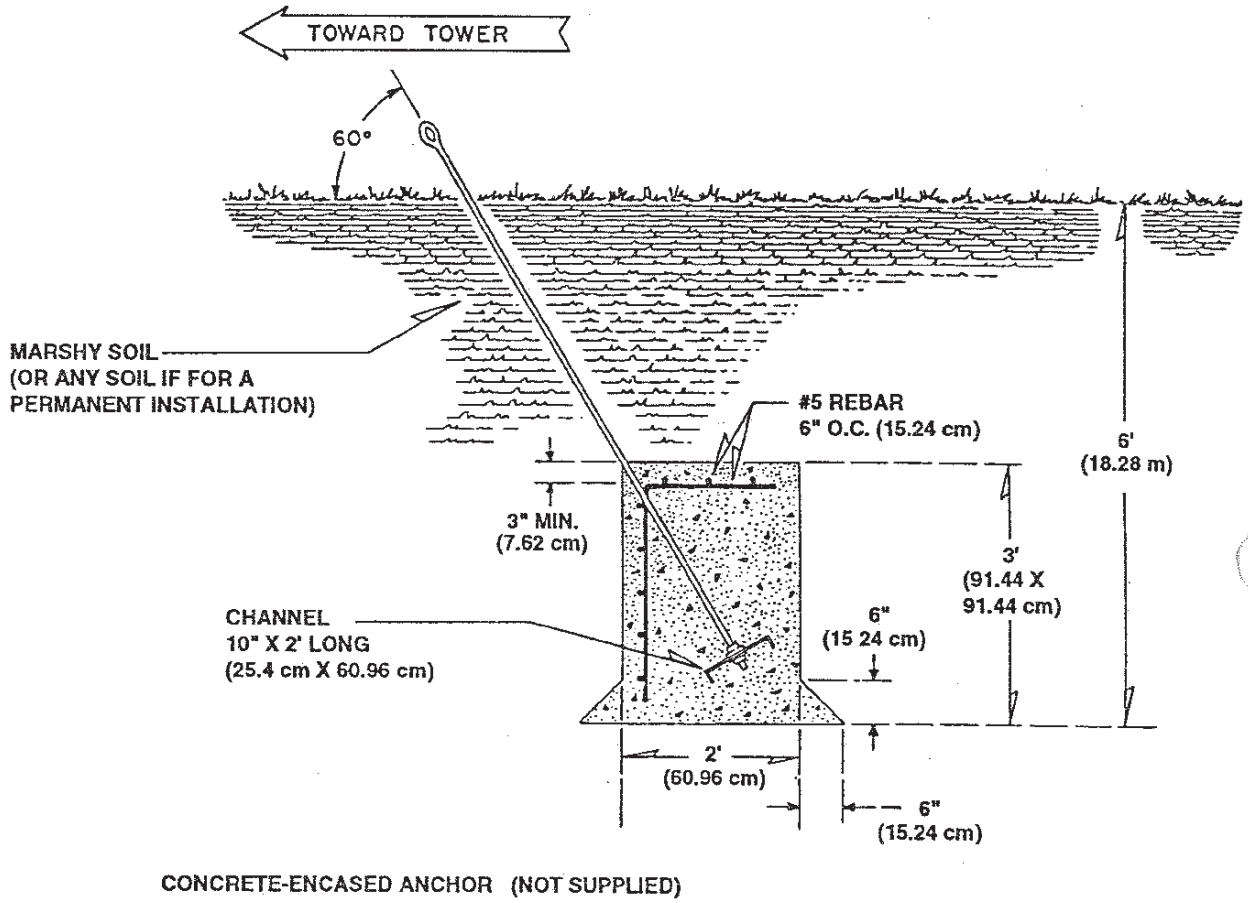

Figure 2-9
Anchor Installation for Sand or Marsh

Description of Soil	Recommended Anchor
Solid Bedrock	Large Anchor
Dense Clay; compact gravel; dense fine sand; laminated rock; schist, or sandstone	Screw Anchor or Large Anchor
Shale; broken bedrock; hardpan; compact clay-gravel mixtures	Screw Anchor or Large Anchor
Gravel, compact gravel and sand; claypan	Screw Anchor
Swamp; marsh; saturated silt; humus	Concrete

Table 2-4, Anchor Selection Chart

2-9. Tower Assembly

a. The following assembly instructions are written for the use of an erection crew consisting of at least four men, with six or more men being desirable. Each of the men should assume the duties of the four-man erection crew as outlined in the manual. Although slight variations can be made to the assembly and erection procedures, the following step-by-step instructions are designed to provide the quickest and most efficient assembly and erection possible.

b. Two men will remove the lower nested tower section from the crate. The lower and upper gin pole assemblies can also be removed from the crate at this time.

c. The tower sections are nested together as shown in Figure 2-10. Remove sections 3 and 2 from section 1, then remove section 3 from section 2, and lay them out as shown in Step 3. Note the color coding on the end of each tower leg. The bottom section (section 3) should be assembled near the base plate.

d. One man assembles the tower feet onto the small end of the lower tower section (Figure 2-11). He then moves the lower tower section over the base plate and pins the two lower tower legs to the tabs on the base plate (Figure 2-12).

e. Referring again to Figures 2-10 and 2-11, three men assemble the tower sections as shown. Step 3 of Figure 2-10 shows the connection of sections 3 and 2 and 1 of the lower tower section.

f. Put the four U-bolts loosely into tower joint stiffeners at the tower joints as shown in Figure 2-11.

g. As the tower lays on the ground, install the knee cable bracket into the upper mast leg. Position it at the second tower joint from the base plate. Fasten the bracket under the U-bolts. See Figure 2-13.

h. After all three stiffeners of a section are loosely intalled, tighten the U-bolts uniformly. Repeat for sections indicated in Figure 2-11.

i. Assemble the upper tower section in a similar manner, referring to Figures 2-10 and 2-11.

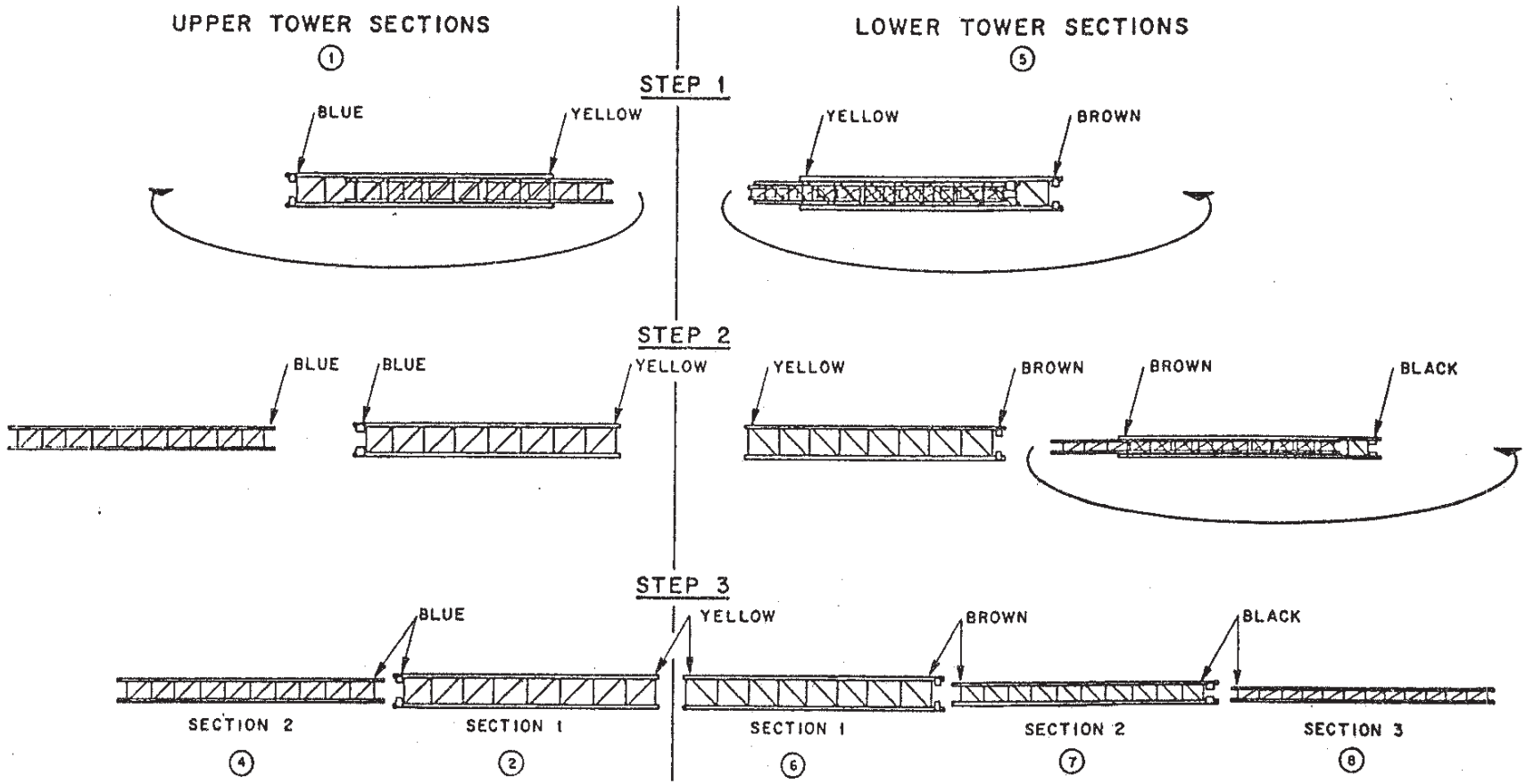

NOTE

COLOR CODING IS FOUND ON TOP LEG ONLY.

Figure 2-10
Layout of Tower Sectins

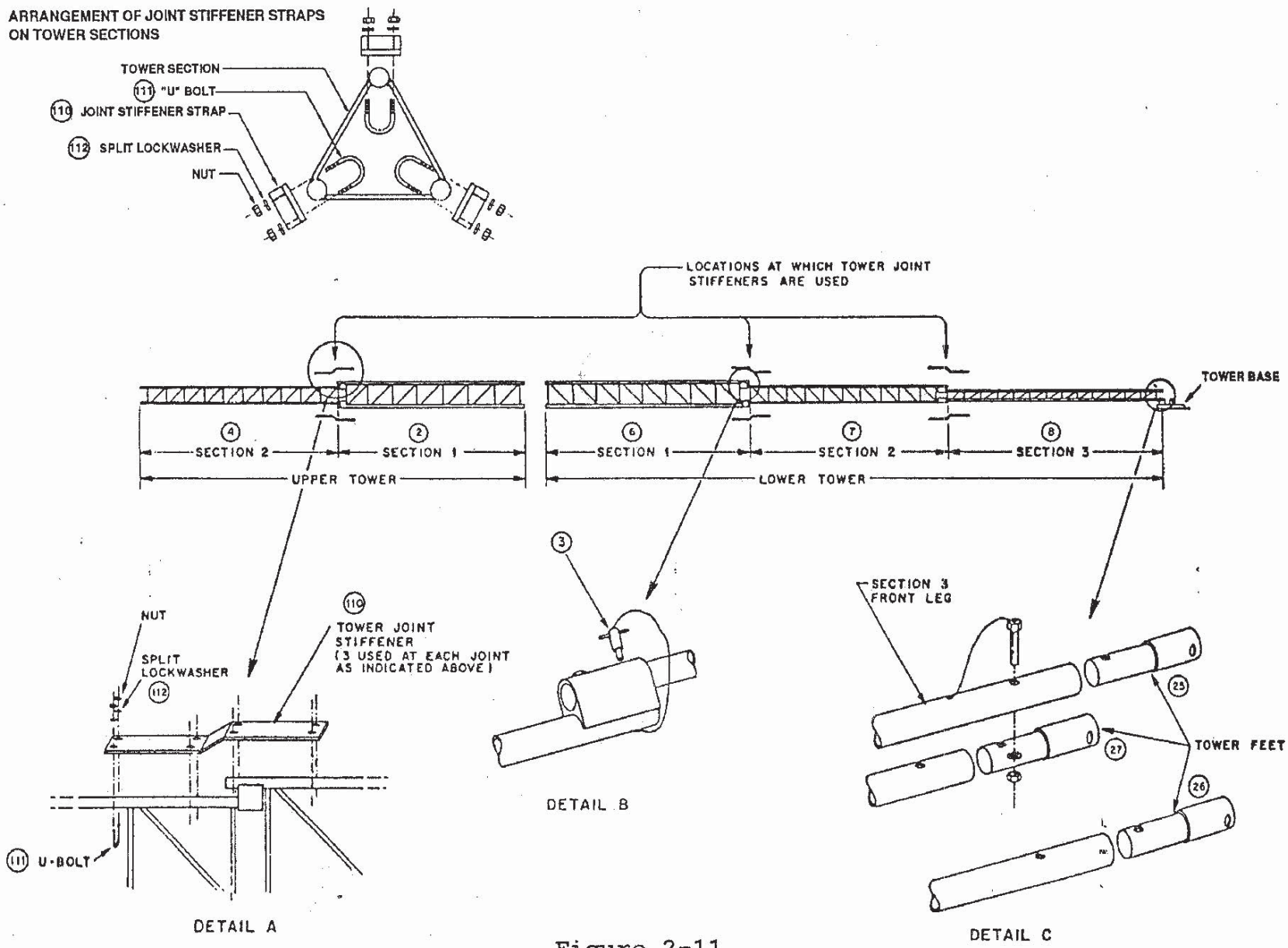

Figure 2-11
Tower Section and Stacking Arrangement

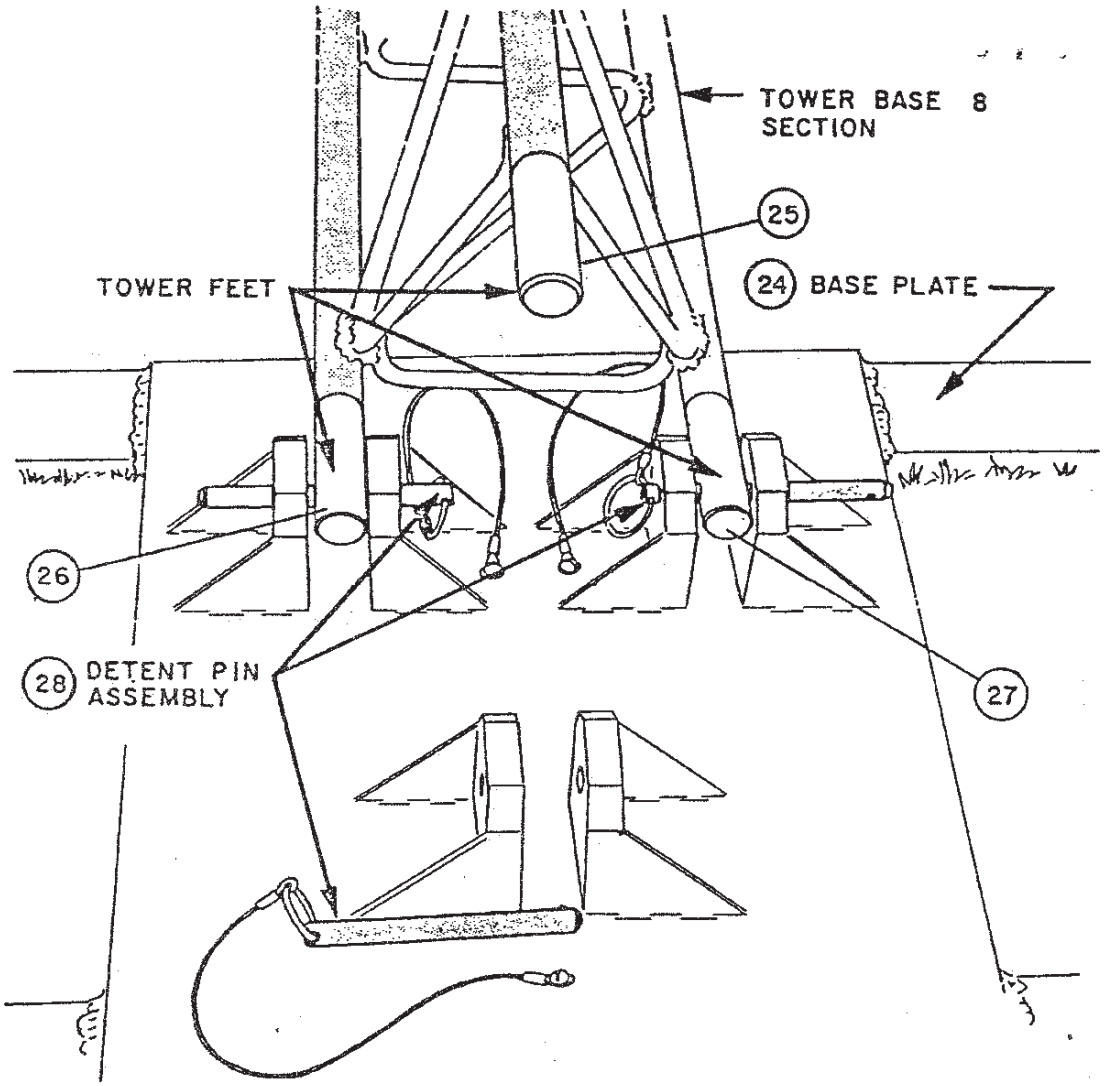

Figure 2-12
Anchoring Tower Base Section
to Tower Base Plate

j. As the tower lays on the ground, install the knee cable bracket (with cable) on the upper mast leg of the second joint from the base plate. Fasten the bracket with the U-bolt exactly as shown in Figure 2-13.

> **NOTE:** It is essential that the proper leg be attached to the proper adjoining leg of the next section.

k. Figure 2-14 identifies the lower tower guy plate assemblies. The guy plates are assembled between the lower tower section and the upper tower section as shown. Latch the guy plates and the tower sections together with the detent pins.

l. Lay out the equalizer plate toward the rear guy anchor #3, and the lower tower front guy cable toward the base plate. Do not attach the turnbuckles.

2-10 Gin Pole Assembly

a. Lay the upper gin poles and the lower gin poles on the ground near the tower in their approximate assembled position.

b. Assemble the upper gin pole into the lower gin pole, and lock them together with the detent pin.

c. Spread the legs of the gin pole at the bottom, and be sure the tab on the bottom of each leg points inward.

d. Two persons should assemble the gin pole top plate on the upper gin pole sections, being sure the side with the groove faces the ground.

e. Lock the top plate assembly with the detent pins, being sure that the tab on the bottom of each leg is still pointing inward.

f. Two men shall pick up the gin pole and move it over the top of the assembled lower tower section.

g. Install the gin pole on the base plate with the detent pins.

h. One man will route the knee cables (knee cable and lower front guy wire) from the tower to the top of the gin pole. Each cable runs over one of the cable rollers at the gin pole top plate and down the gin pole leg nearest its respective cable roller (Figure 2-16).

i. The turnbuckles on the knee cables attach to the eyebolts on the base plate (Figure 2-13). They provide the adjustment needed to equalize tension between the knee cables and the pulling cable. Refer to Figure 2-17 for attaching cables to turnbuckles.

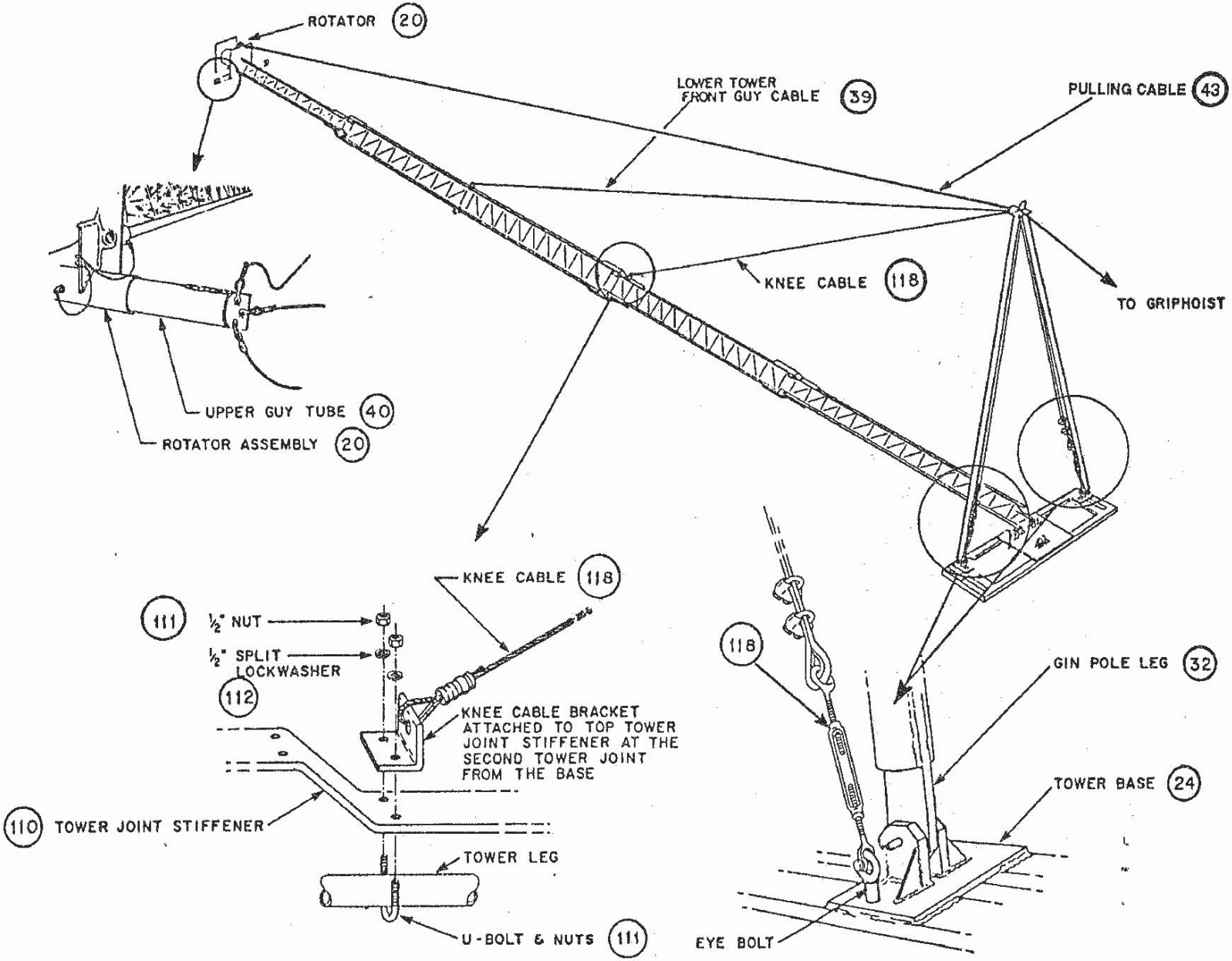

Figure 2-13
Cable Attachments to Tower

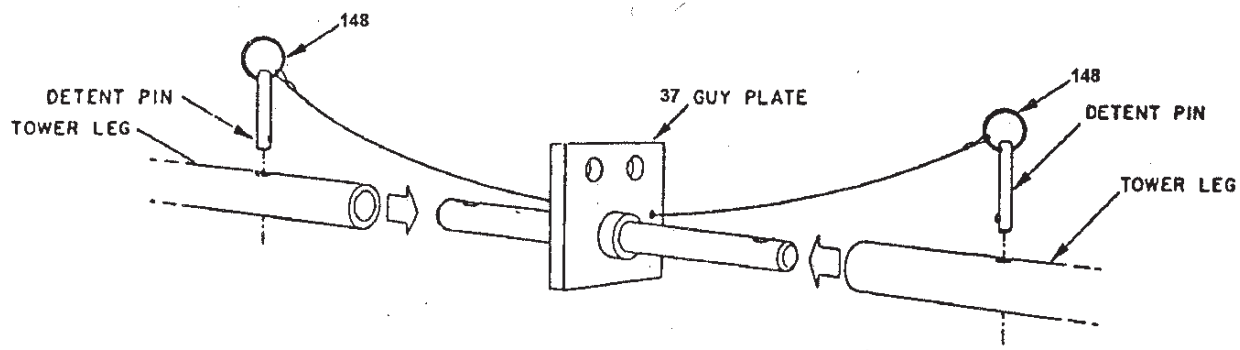

TYPICAL GUY PLATE INSTALLATION

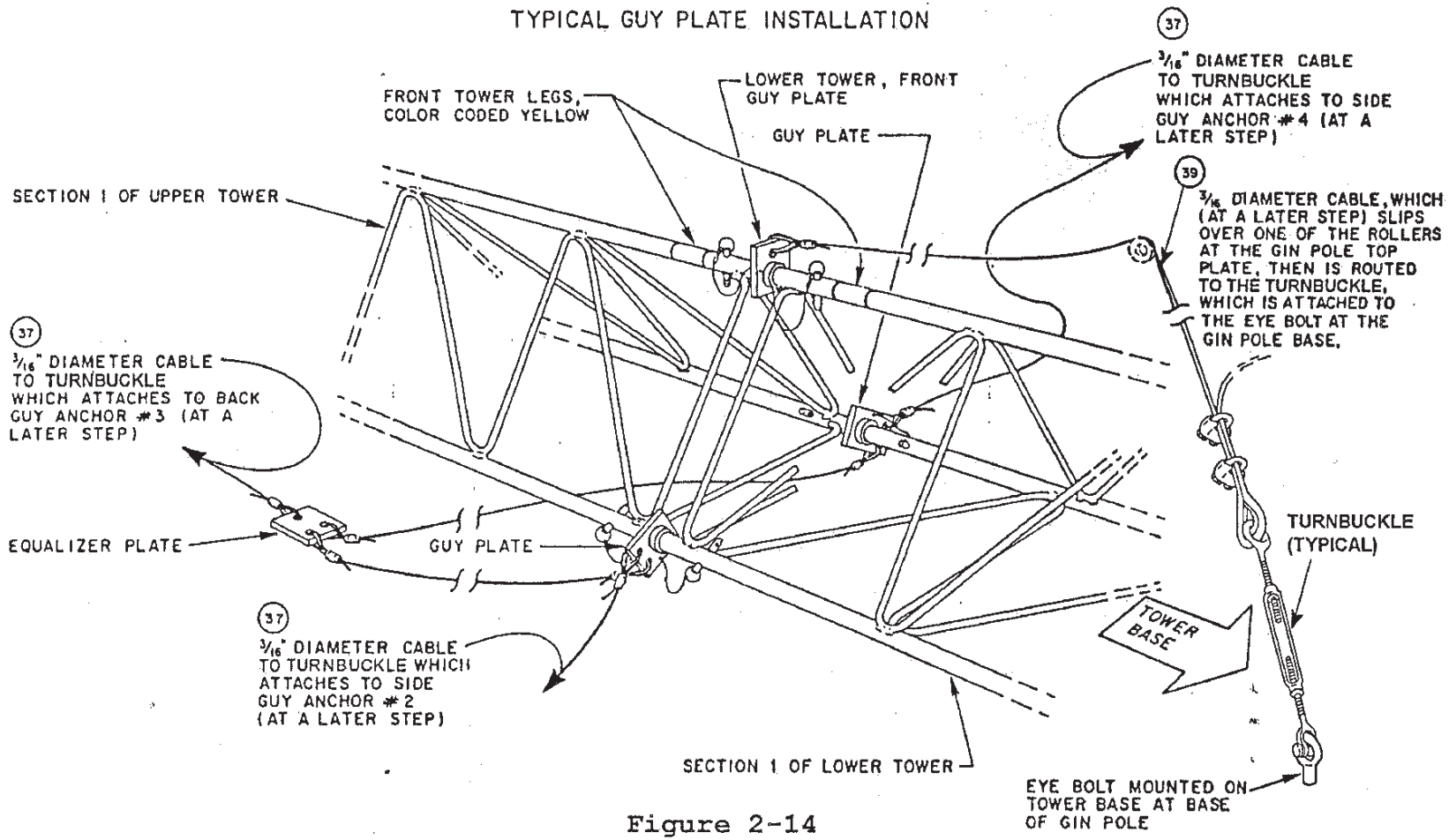

Figure 2-14
Lower Tower Guy Assemblies

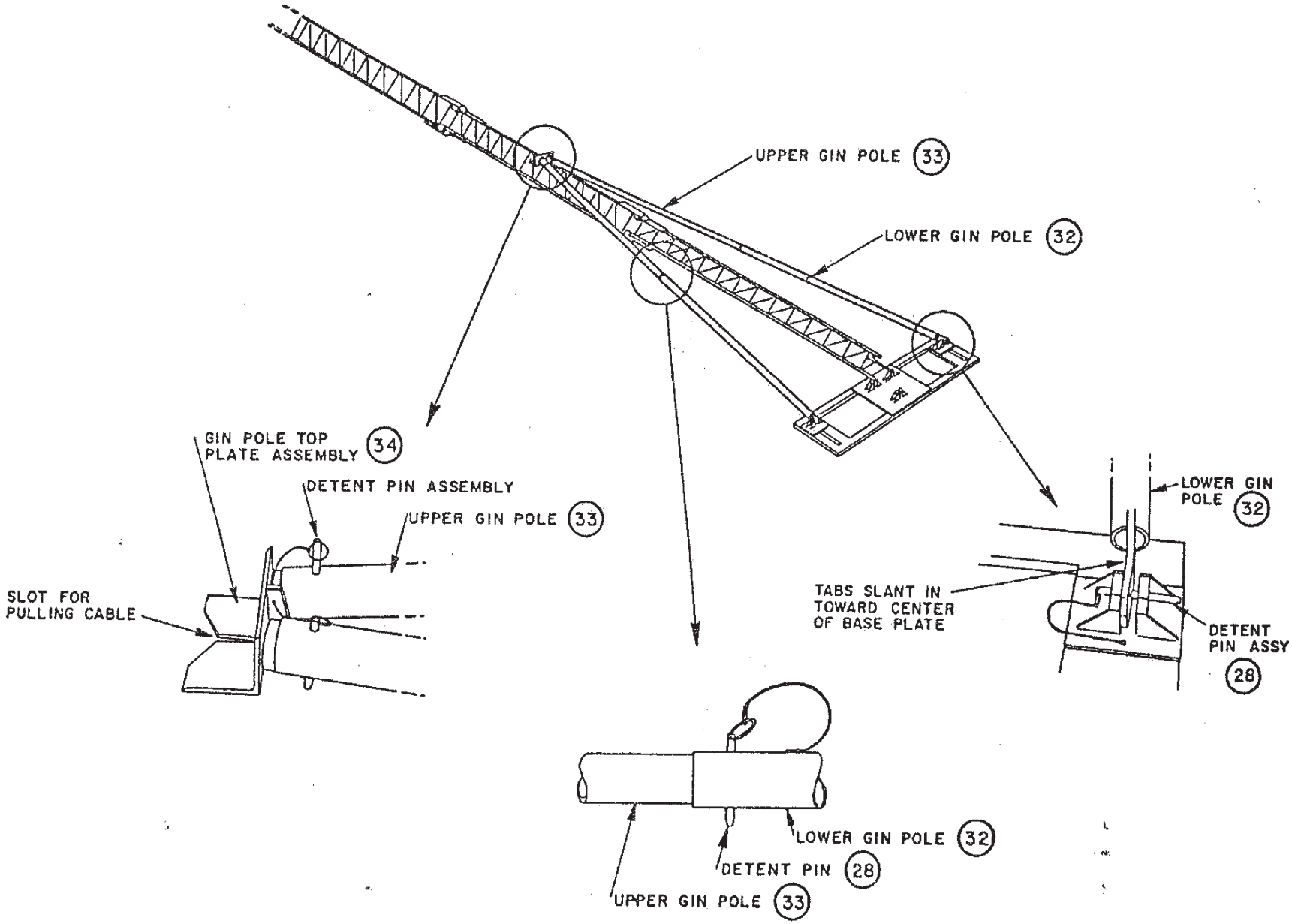

Figure 2-15
Gin Pole Assembly

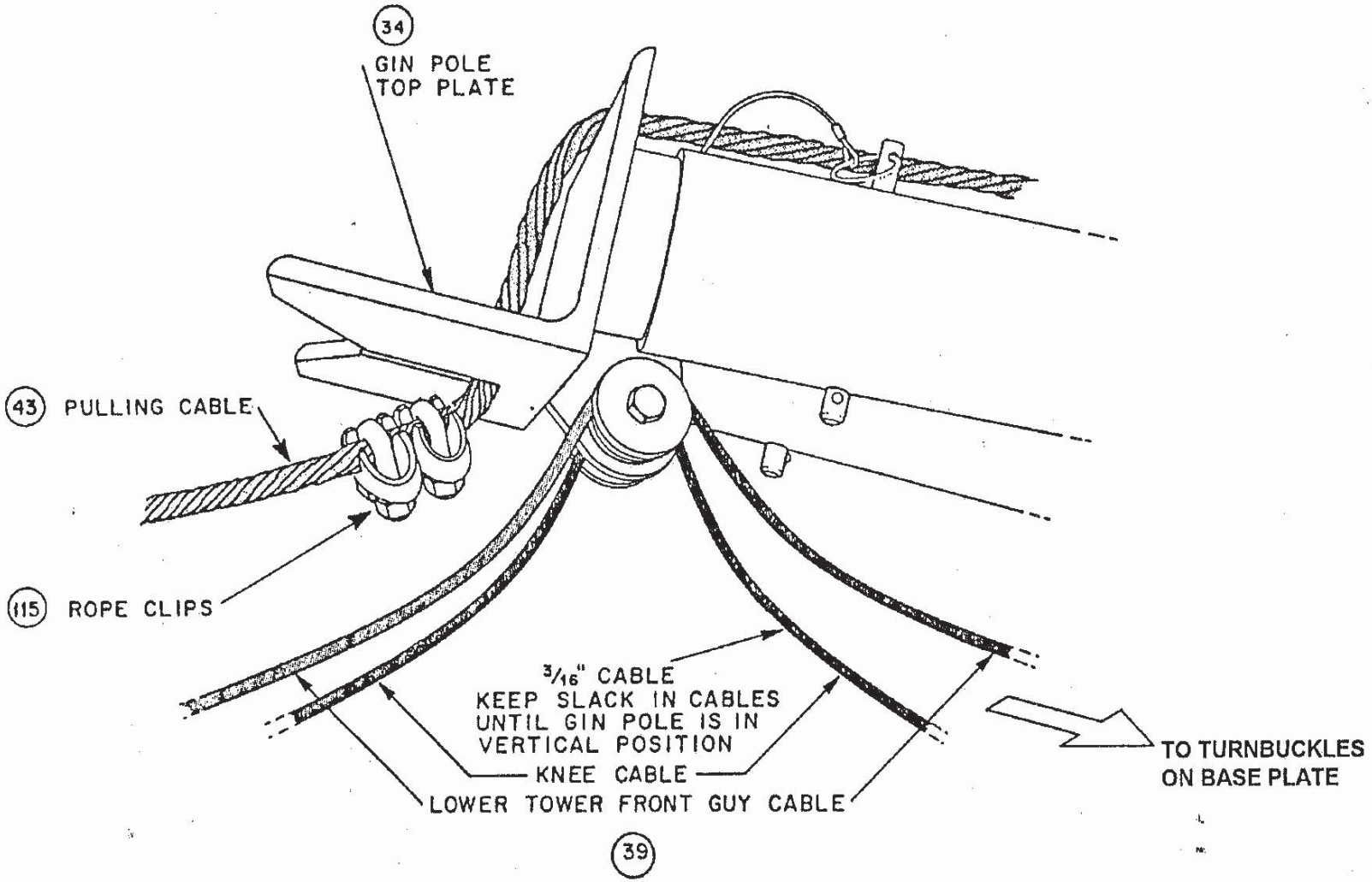

Figure 2-16
Gin Pole Top Plate and Cable Arrangement

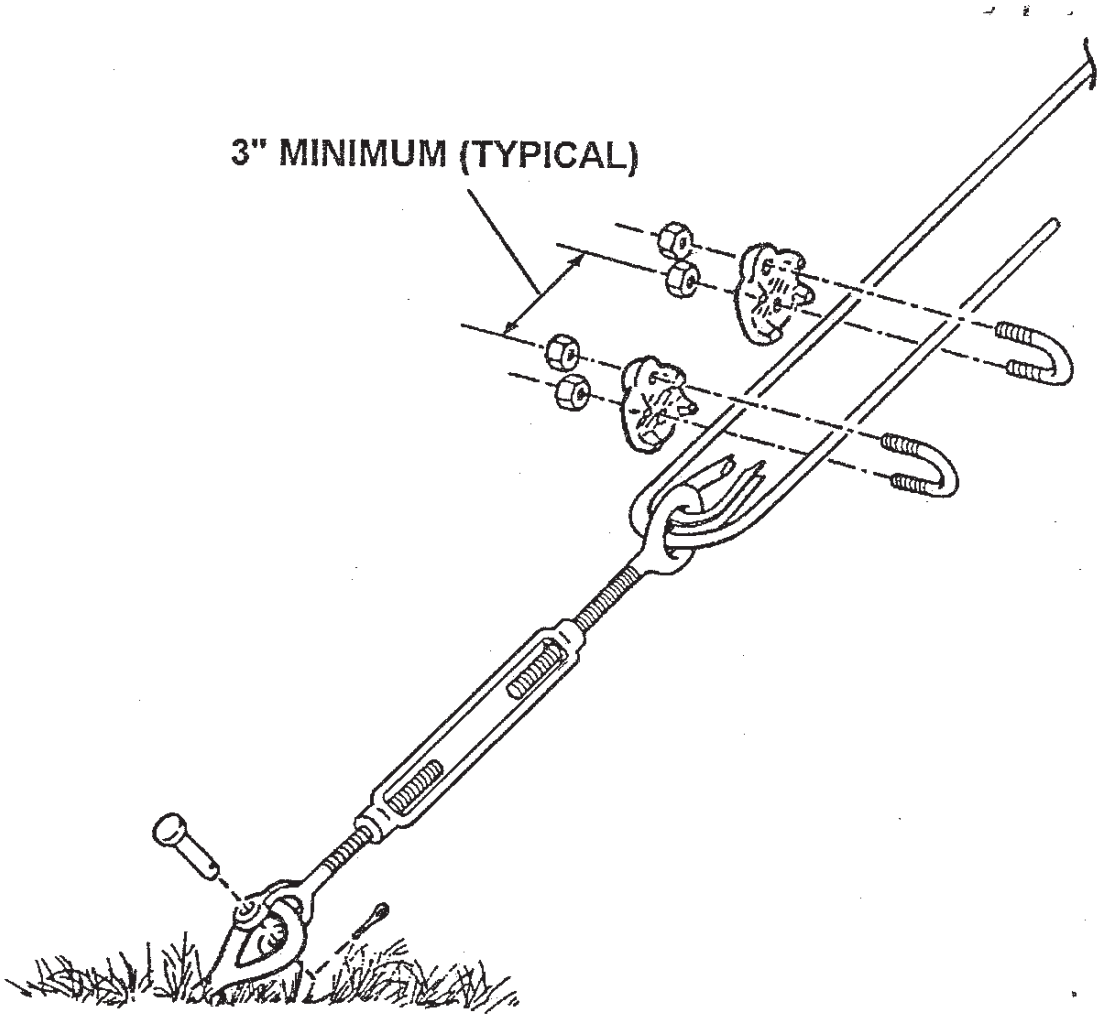

Figure 2-17
Turnbuckle to Anchor

2-11. Rotator Upper Guy Wires and Pulling Cable Assembly.

CAUTION

Be certain the boom plate is latched so it does not fall while rotator is being handled.

a. Two men remove the rotator from the box and place it near the top of the tower assembly.

b. Assemble the rotator to the top of the tower, and lock it into place using the detent pins, as shown in Figure 2-18.

c. Attach the upper guy tubes (Figure 2-19) to the rotator and lock them in place with their detent pins.

d. Lay out the upper guy wires to the respective anchors as indicated in Figure 2-19.

e. Be sure there are no kinks or sharp bends in the guy wires, then connect the turnbuckles to the proper anchors.

f. One man removes the pulling cable (Figure 2-20) from the box, attaches the hook on the cable to rotator loop (Figure 2-21), routes the cable through the slot in the gin pole top plate, and then lays it over the base plate.

g. At this time, hook the tackle block to the pulling cable, hook the griphoist cable to anchor #6 and place the griphoist on the ground near anchor #5.

h. Referring to Figures 2-21 and 2-22, route the griphoist cable through the tackle block and toward the griphoist.

2-12. Griphoist Operation and Raising Gin Pole.

a. Push the clutch actuating lever (Figure 2-22) firmly toward the hook into the notched position. This opens both pairs of jaws.

b. Push the reversing lever toward the wire rope entry. Introduce the tapered end of the griphoist cable (coming from the pulley block) through the guide bushing by approximately 4 inches. Push the lever back toward the hook and continue to feed in the rope.

c. Pull the wire rope coming out of the hook by hand until all the slack is taken out of the griphoist and pulling cables. Hook the griphoist to anchor #5. Push the clutch actuating lever back to the locking position.

d. Place the telescopic lever on the power stroke lever. Engage the notch in the locking pin and fix the lever by turning it around.

e. Operate the power stroke lever backward and forward with a slow steady movement. Jerking motions should be avoided to ensure smooth operation. For heavy loads, the telescopic lever should be pulled out to its fullest extent.

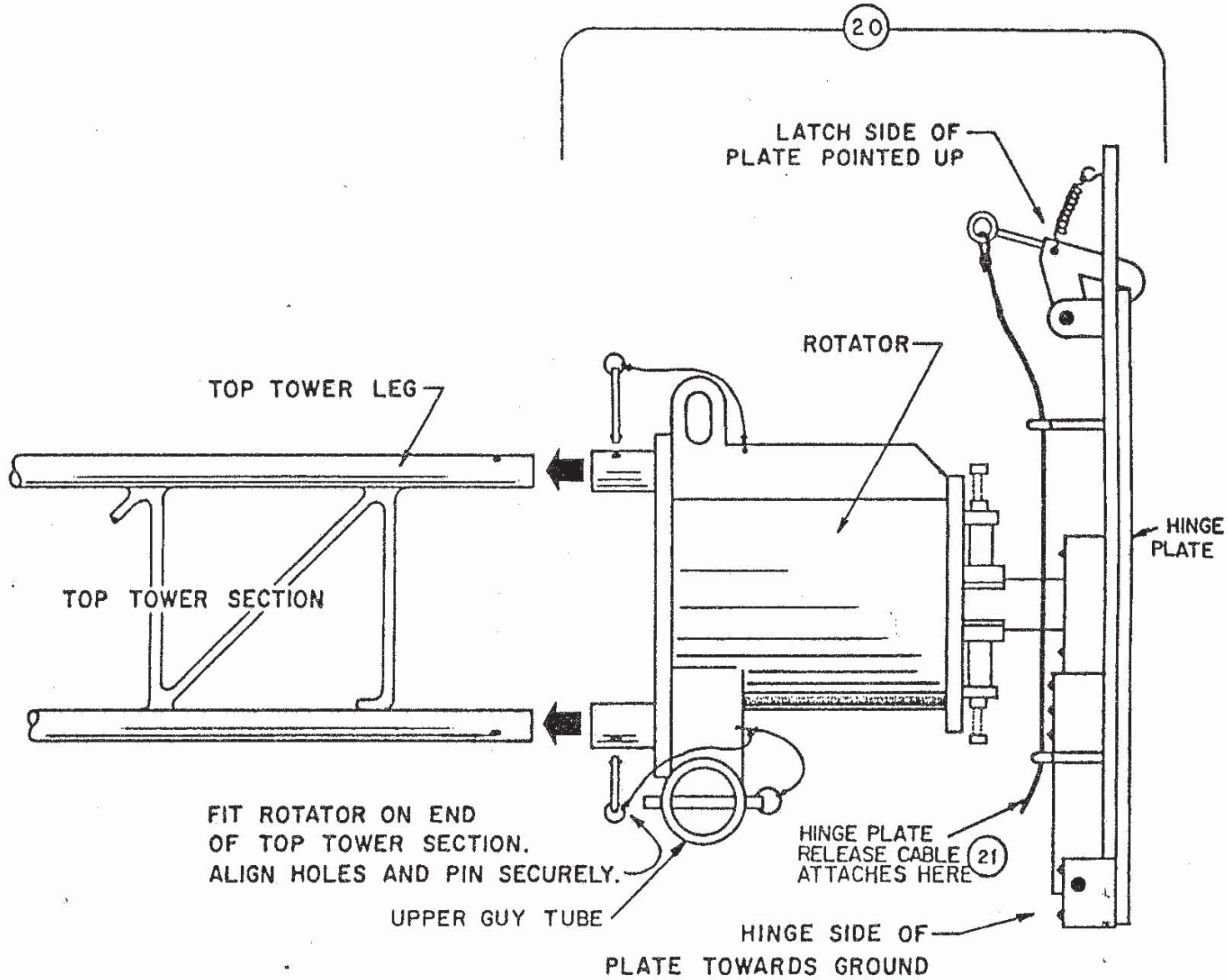

Figure 2-18
Placement of Rotator on Top of Tower

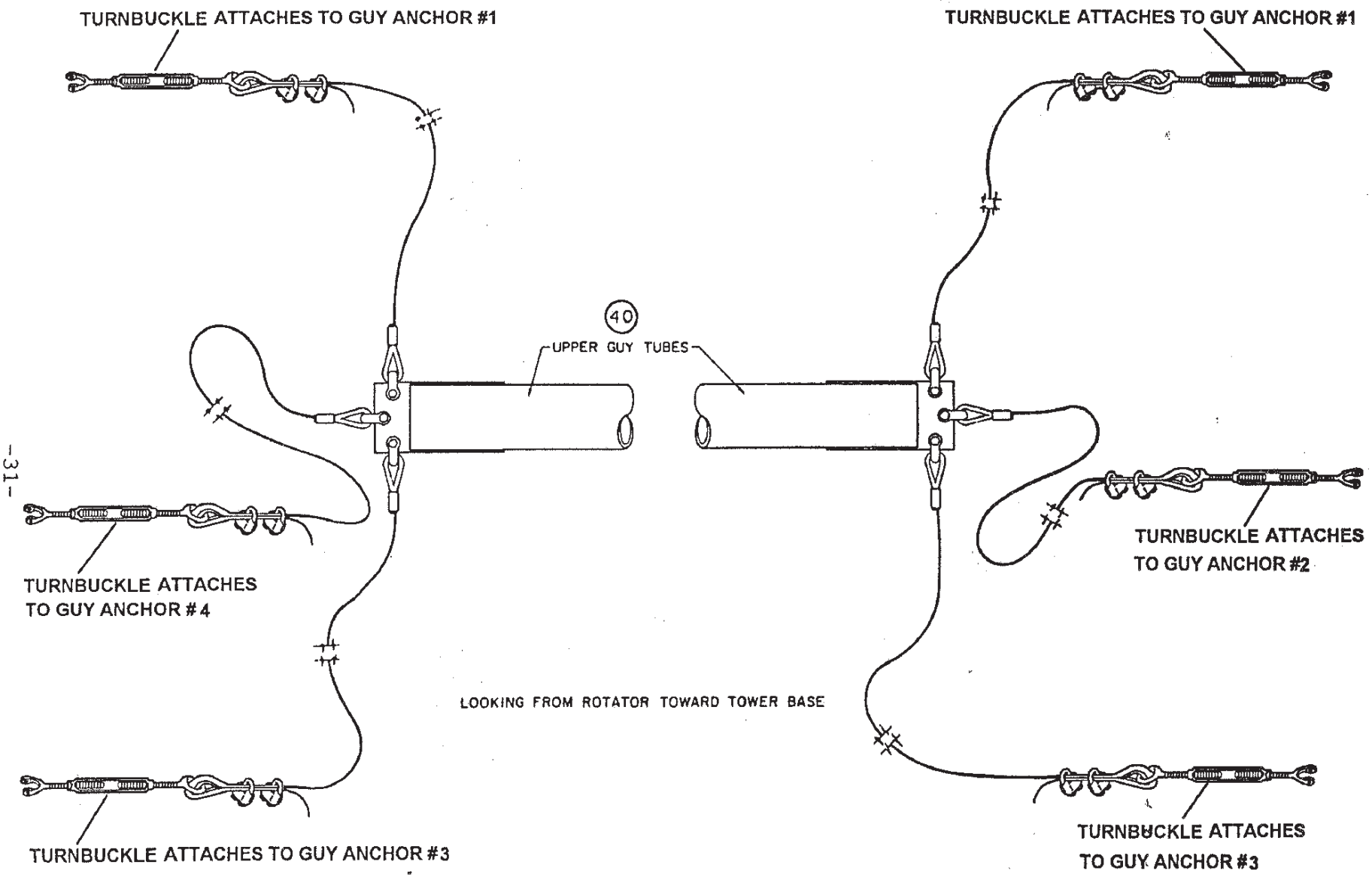

Figure 2-19
Upper Guy Identification

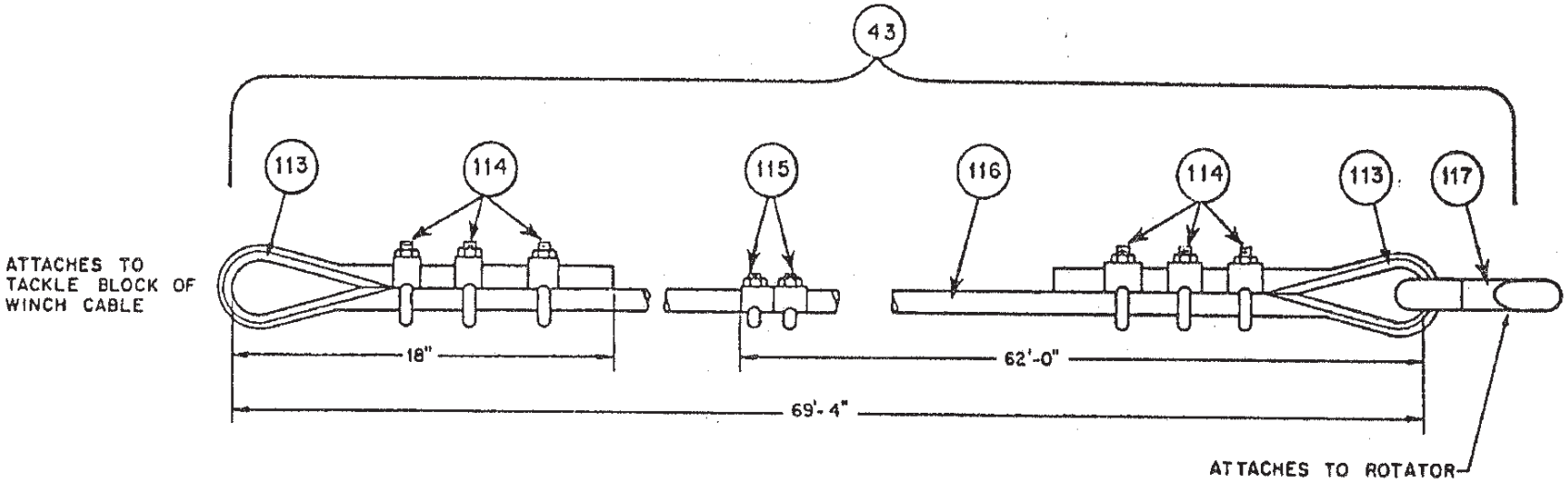

Figure 2-20
Pulling Cable

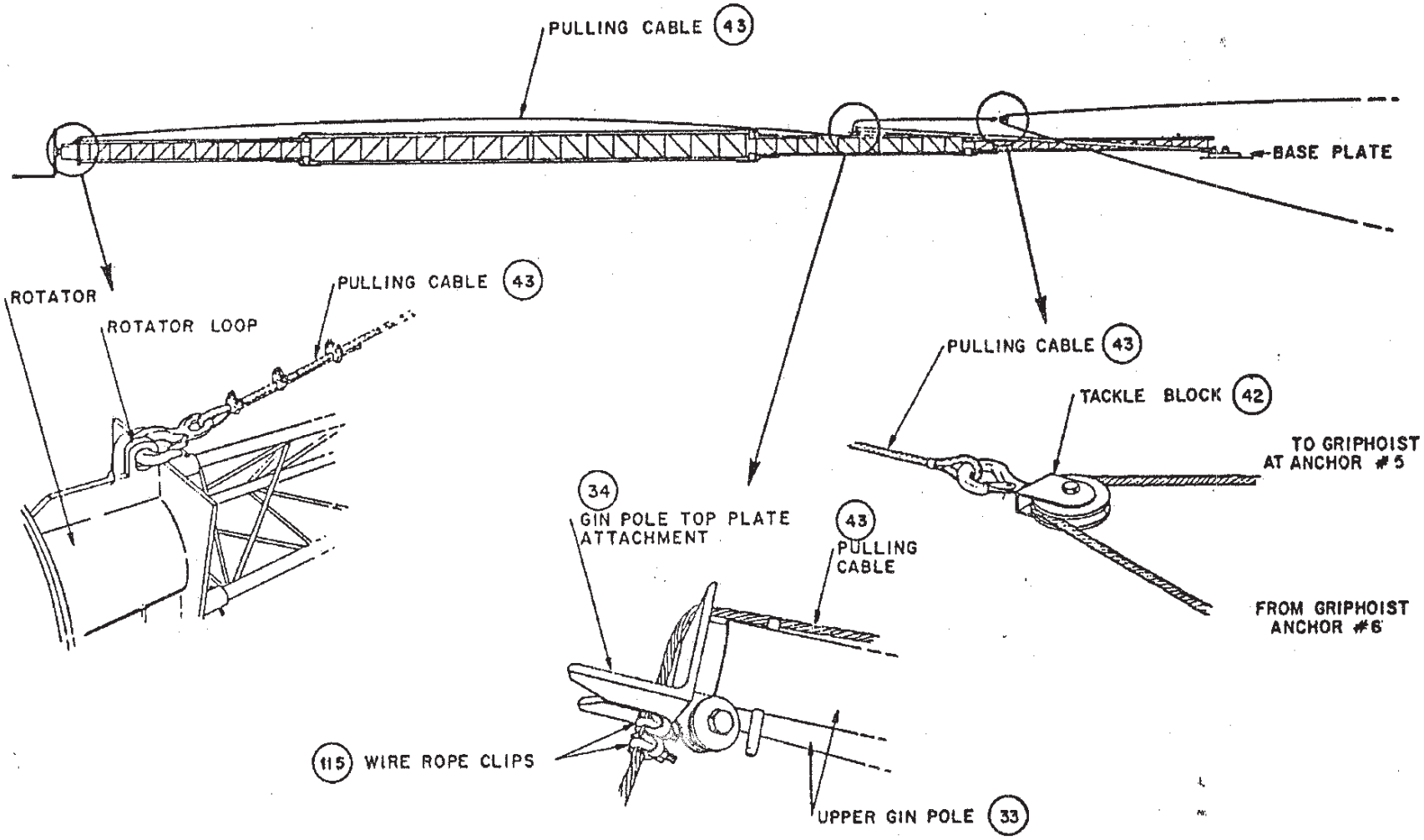

Figure 2-21
Cable and Gin Pole Arrangement Prior to Erection

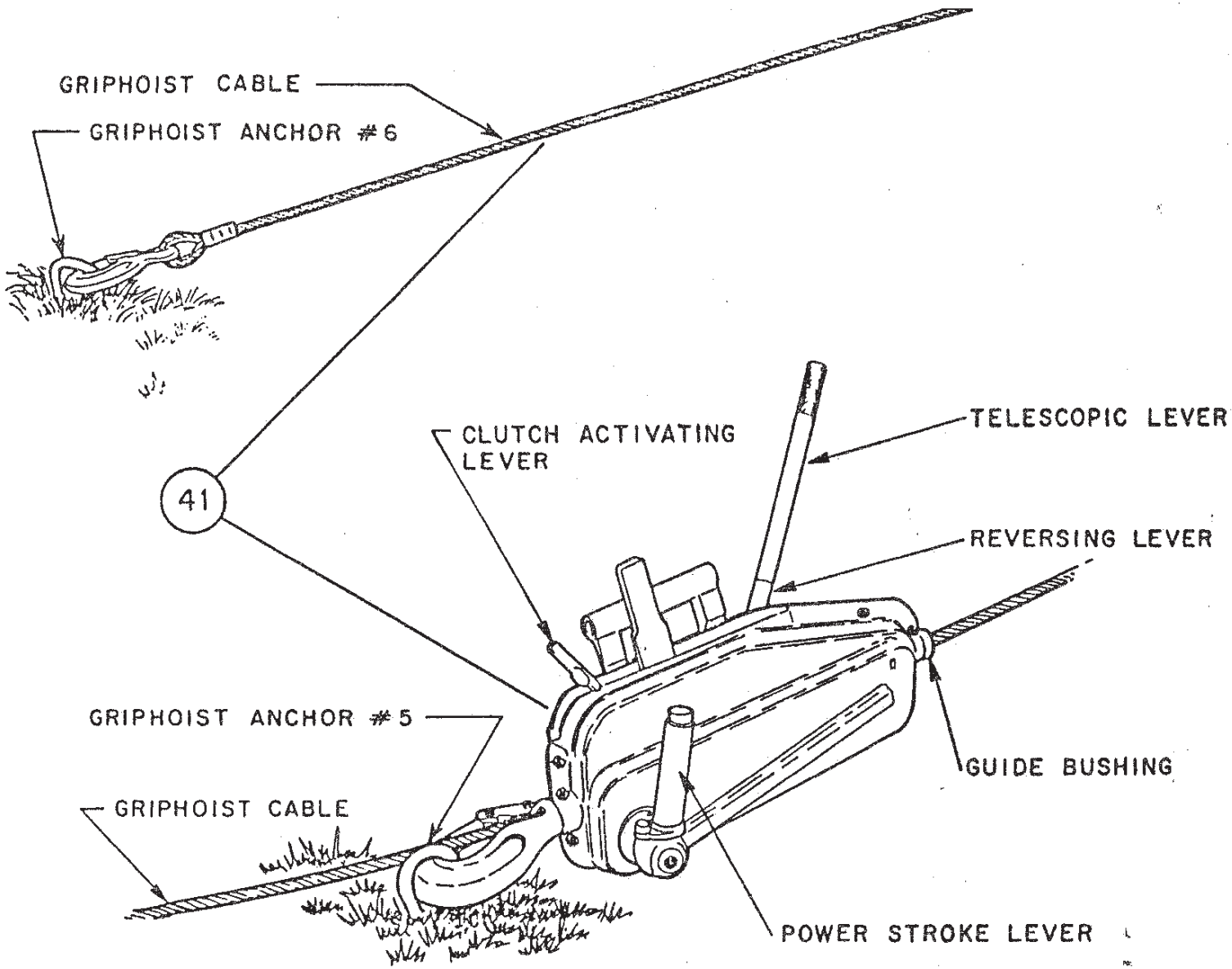

GRIPHOIST

Figure 2-22
Griphoist Identification and Attachment

f. Two persons manually lift the gin pole about 5 feet off the ground, as shown in Figure 2-23, making sure the pulling cable rests in the slot on the gin pole top plate assembly and that the wire rope clamps are on the correct side of the slot (Figure 2-21).

g. The grip hoist operator will continue to operate the grip hoist, slowly pulling the excess slack from the griphoist and pulling cables.

h. At this time, check the cables to make sure the tackle block, griphoist, griphoist cable and pulling cable are all securely hooked up and that there are no kinks or sharp bends in the cables.

i. Connect the lower tower back guy wires to the equalizer plate and the lower tower side guy wires to the guy plates.

j. Lay the guy wires out on the ground toward their respective anchors (Figures 2-14 and 2-24), being sure there are no kinks or sharp bends in the wires.

k. Connect the lower tower guy turnbuckles to their respective anchors.

l. Adjust the turnbuckles of the upper and lower side guys to remove all excess slack. Do not apply tension to the guys at this time, only remove excess slack.

m. The griphoist operator will begin to raise the gin pole to its vertical position.

> **NOTE:** The knee cable and the front lower tower guy should not be tensioned until the pulling cable is tight.

n. Connect the turnbuckles on the knee cable and the lower tower front guy to the eyebolts on the base plate.

> **NOTE:** If the knee cable or the front lower tower guy become taut before the pulling cable, loosen them using the turnbuckles.

o. As the gin pole nears the vertical position, check to be sure the turnbuckles on the base plate are locked to prevent the gin pole from falling toward the griphoist.

p. When the gin pole is vertical (Figure 2-24) adjust the turnbuckles on the base plate so there is equal tension on the knee cables and pulling cables

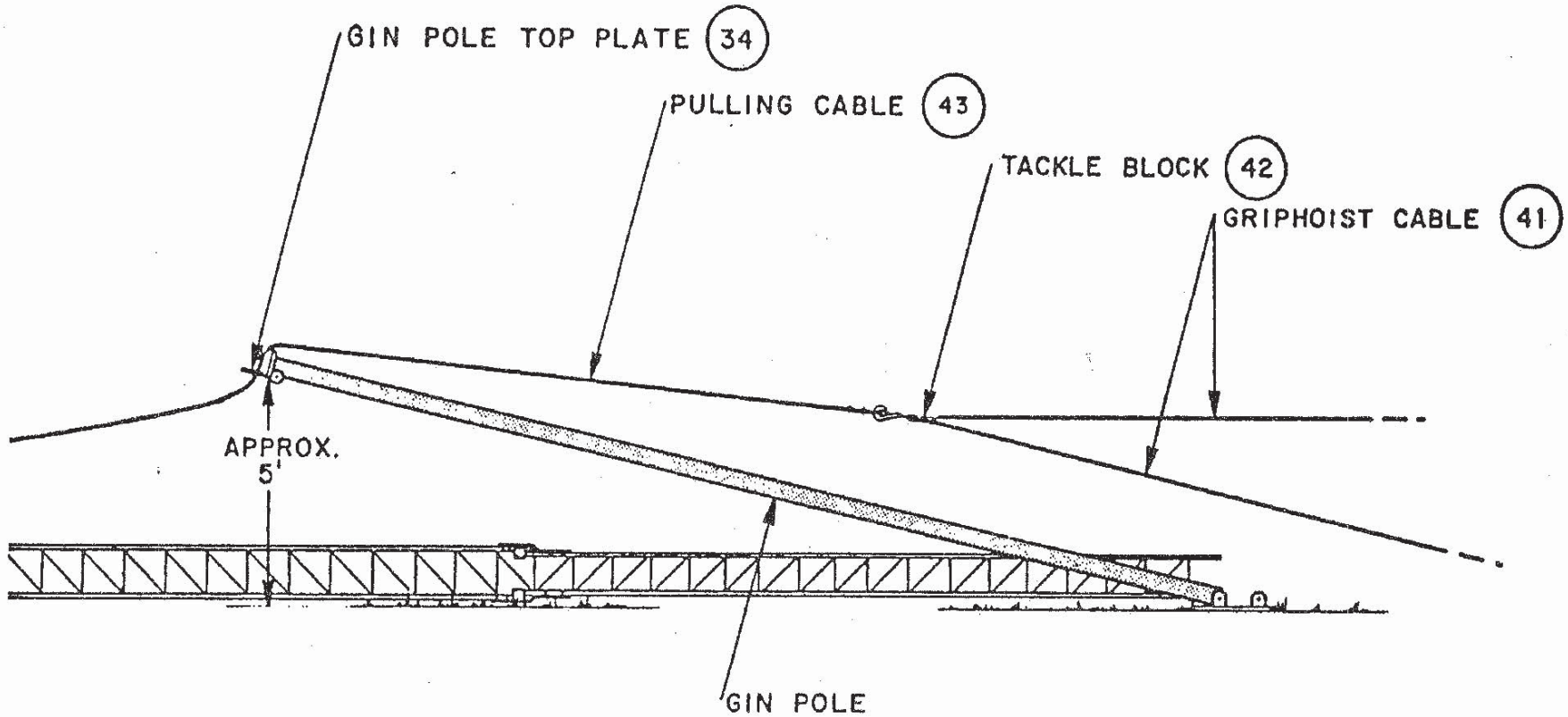

Figure 2-23
Lifting Gin Pole

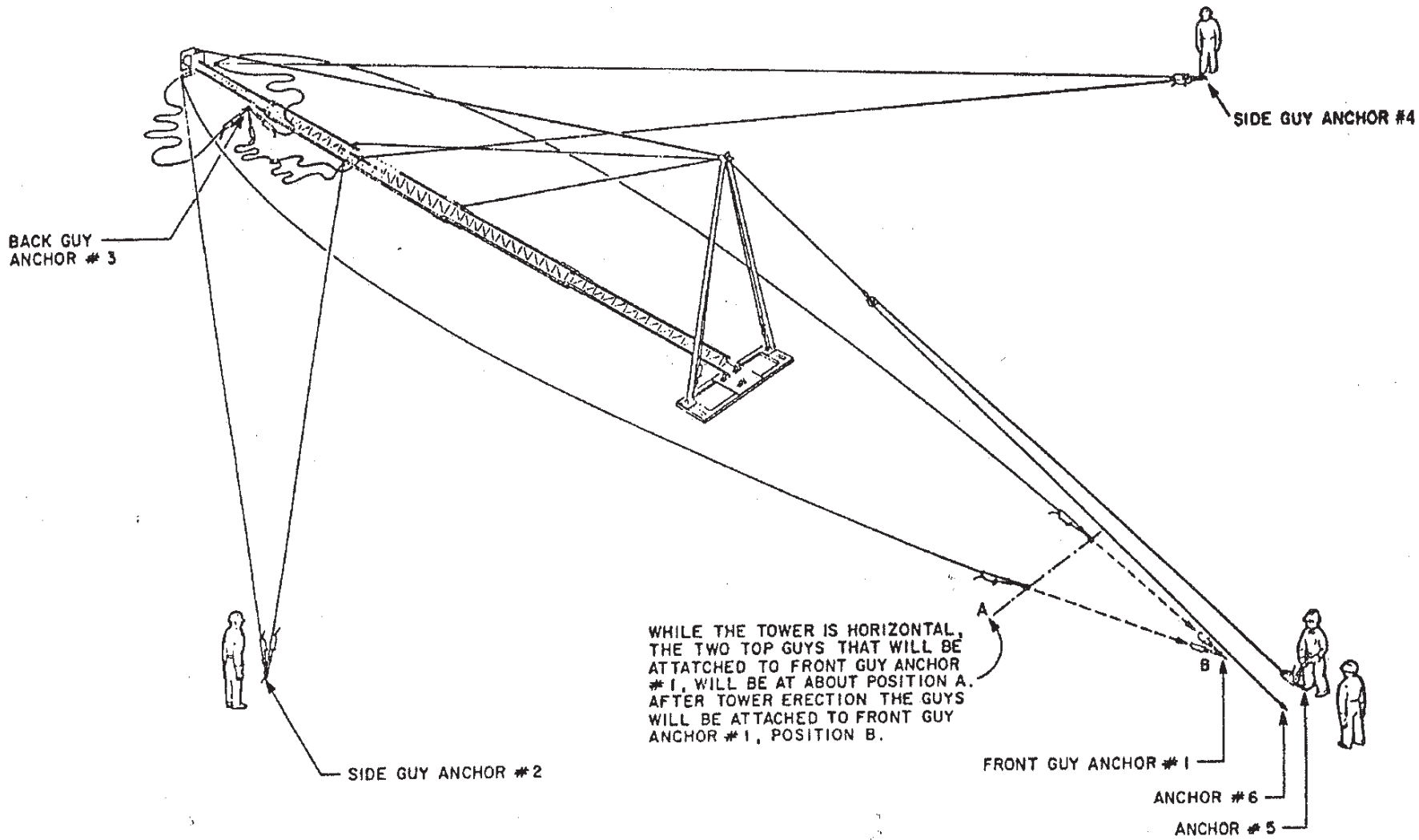

Figure 2-24
Guy Attachments to Tower Before Erection

2-13. Preliminary Raising and Lowering of the Tower.

CAUTION

Do not omit the preliminary raising of the tower. This will ensure that each man knows his duties when the complete system is raised, and it will also allow guy cables to be preadjusted.

a. One man will take a position between anchors 5 and 6 as shown in Figure 2-24, who will now be referred to as the "man in charge" during the erecting procedure.

b. Position a man at each side guy anchor as shown in Figure 2-24. These men will make guy adjustments as required when instructed by the man in charge.

CAUTION

It is important that the griphoist be operated slowly and smoothly. Rapid pumping of the griphoist will cause the tower to bounce. Excessive bouncing may cause structural failure.

c. The griphoist operator begins to slowly raise the tower, taking slow, steady strokes on the griphoist, stopping when the tower just clears the ground.

CAUTION

Failure to make the following adjustments may cause serious structural damage to the tower.

d. The man in charge will sight through the tower base to the back guy anchor. He will ensure that the tower is in a straight line between the front anchor and the back anchor.

e. He will give instructions to the men manning the side guys to make appropriate adjustments to obtain proper alignment and to take out any bowing of the tower.

CAUTION

Side guys must be adjusted without applying excessive tension to the guys. Before the man in charge gives an order to tighten any side guy, he must first give instructions to reduce the tension in the corresponding guy on the opposite side of the tower. Failure to follow this procedure may cause serious structural damage to the tower and cause failure of the system.

f. Make adjustment to the turnbuckles at the base plate to take out any bow in the tower. The knee cables and pulling cable must be equally taut to keep the tower straight.

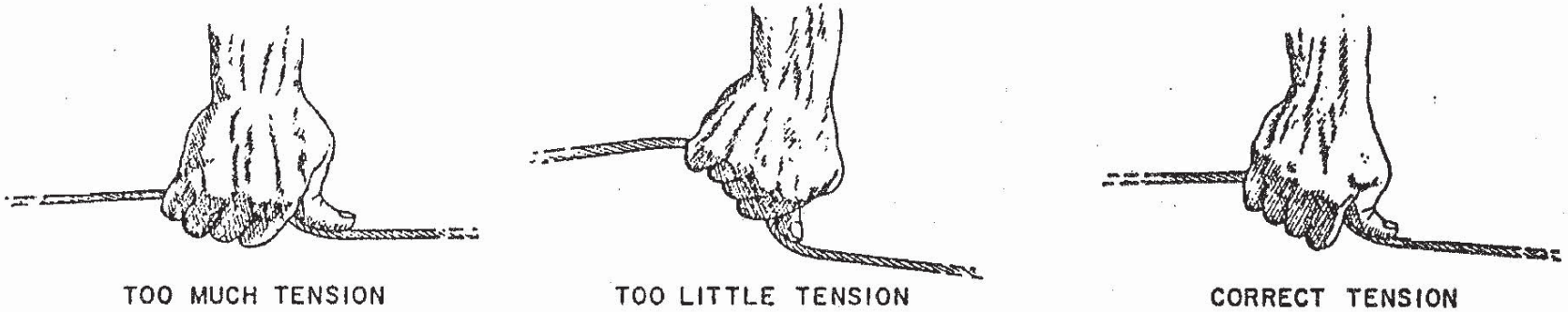

Figure 2-25
Checking Side Guy Tension

g. The tower must be kept in line and straight during the entire lifting procedure. The man in charge will give constant attention to the tower at all times. He will order adjustments to the side guys (upper and lower) as necessary. Only apply enough tension to remove excessive sag from the guys. To check the tension of the side guys, refer to Figure 2-25 and proceed as follows:

(1) Grasp the guy wire with your hand.

(2) Rotate your hand so that two angles are formed.

(3) If the two angles thus formed are more or less than the tension shown in Figure 2-25, increase or decrease tension as required with the turnbuckle.

h. During the remainder of the erection procedure, the man in charge must constantly maintain alignment of the tower. He must watch for any bowing or bending toward either side. He must give instructions immediately to the man at the side guys to make adjustments to keep the tower straight and in line with the back anchor.

i. When the tower is approximately 35 degrees to the ground, the pulling cable will depart from the gin pole. The lifting force for the remainder of the tower erection will be at the top of the tower only.

j. As the tower nears vertical, a man will be stationed at the back guy anchor to adjust the back guys. This will prevent the tower from going past vertical (toward the front guy anchor or griphoist).

k. When the tower is in the vertical position, insert the pin to lock the front tower leg to the base plate (Figure 2-26).

l. Remove the lower front guy wire from the eyebolt on the base plate and from the roller on the gin pole. Attach the guy to anchor #1 and tension it.

m. Attach the two upper tower front guys to the same anchor and tension them.

n. After the front guys are tensioned, slack must be put in the pulling cable to plumb the tower.

o. Remove the griphoist telescopic lever from the power stroke lever and attach it to the reversing lever (Figure 2-22).

p. Operate the reversing lever backward and forward with the same smooth motion as before. The pulling cable will move in the opposite direction, putting slack in the cable (Figure 2-27). If desired, the griphoist may be removed from its anchor.

q. Using a level, plumb the tower by making slight adjustment of the turnbuckles. Figures 2-28 and 2-29 show a top view of the lower and upper guy assemblies properly installed.

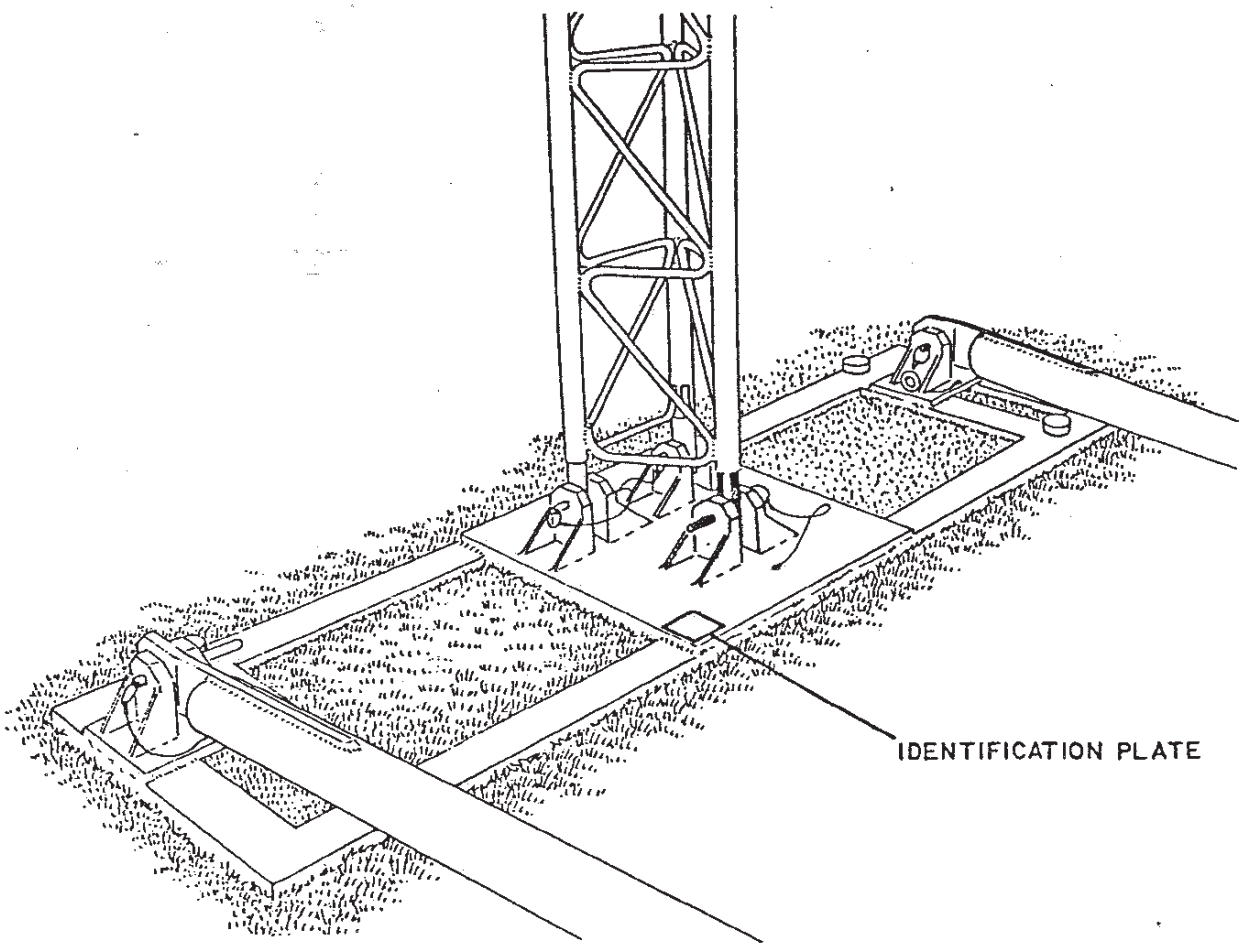

Figure 2-26
Locking Front Tower Leg
to Base Plate Assembly

CAUTION

Do not slacken the pulling cable until the front guys are tensioned.

NOTE

Connect the front guys to the front guy anchor and apply tension to the front guys until the strain is taken off the pulling cable. *ONLY THEN* may the griphoist be operated in reverse to put enough slack in the griphoist cable to allow the griphoist to be disconnected from its anchor.

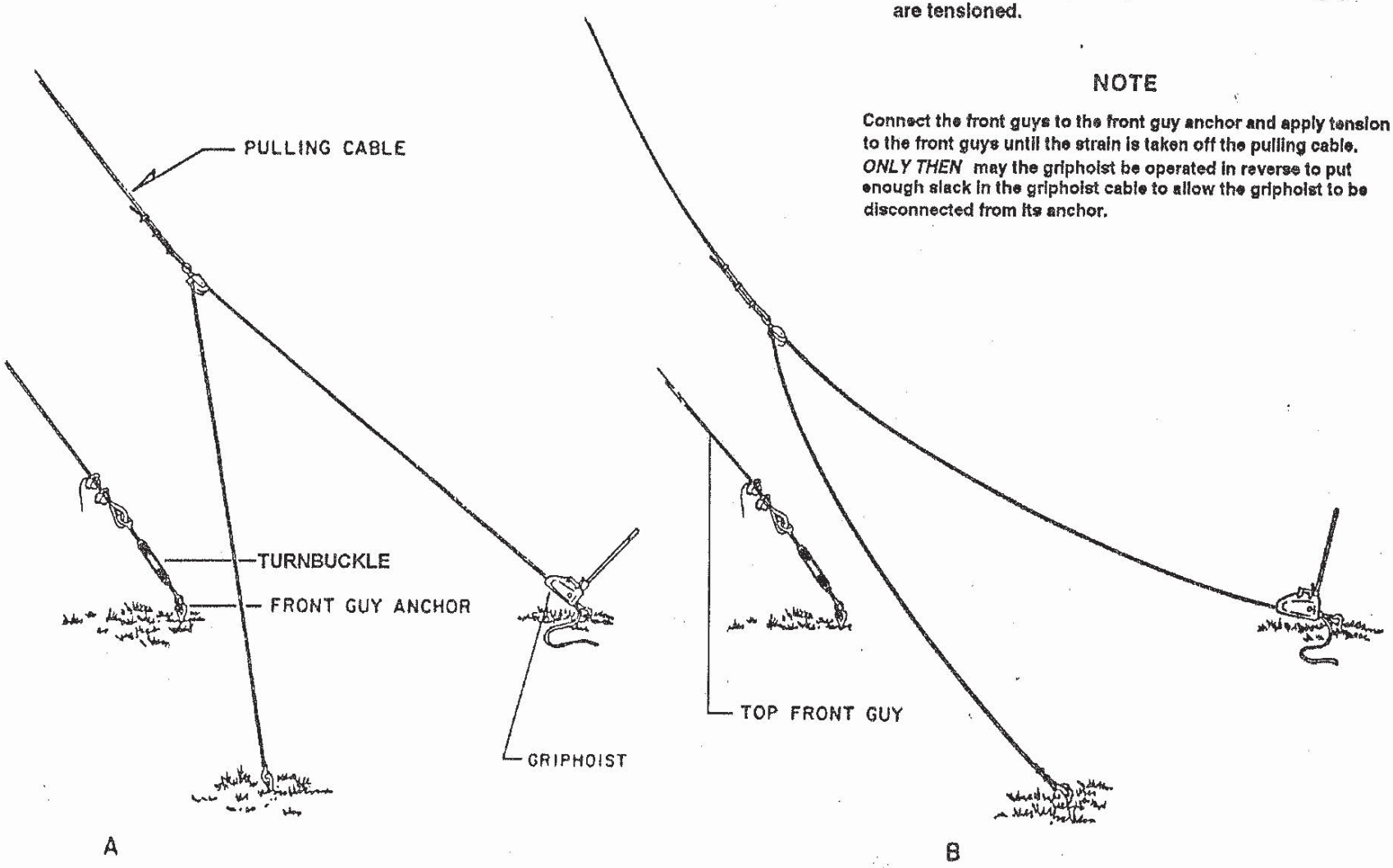

TO DISCONNECT (AFTER RAISING TOWER)

Figure 2-27
Griphoist Disconnect

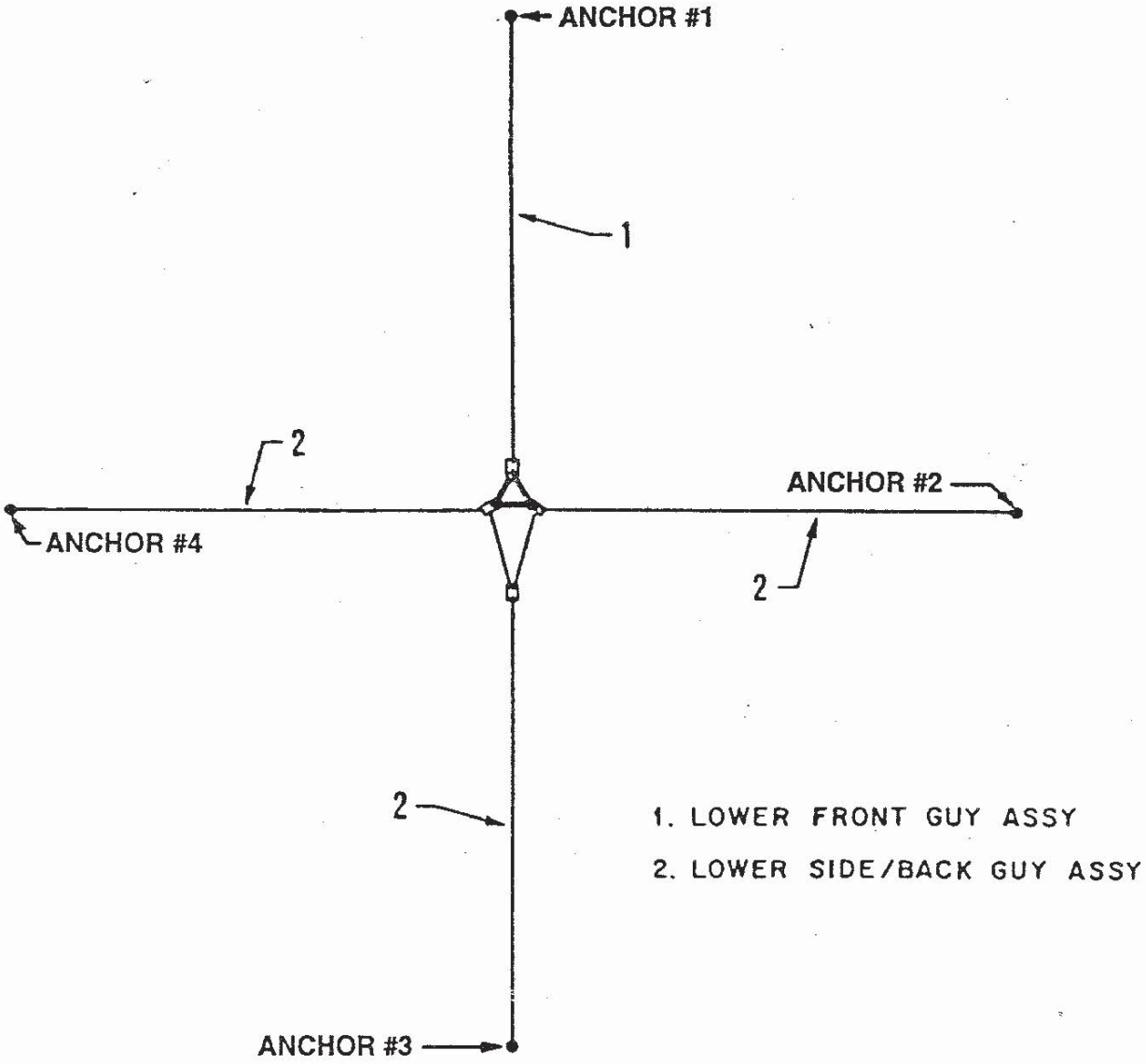

Figure 2-28
Lower Guy Cofiguration

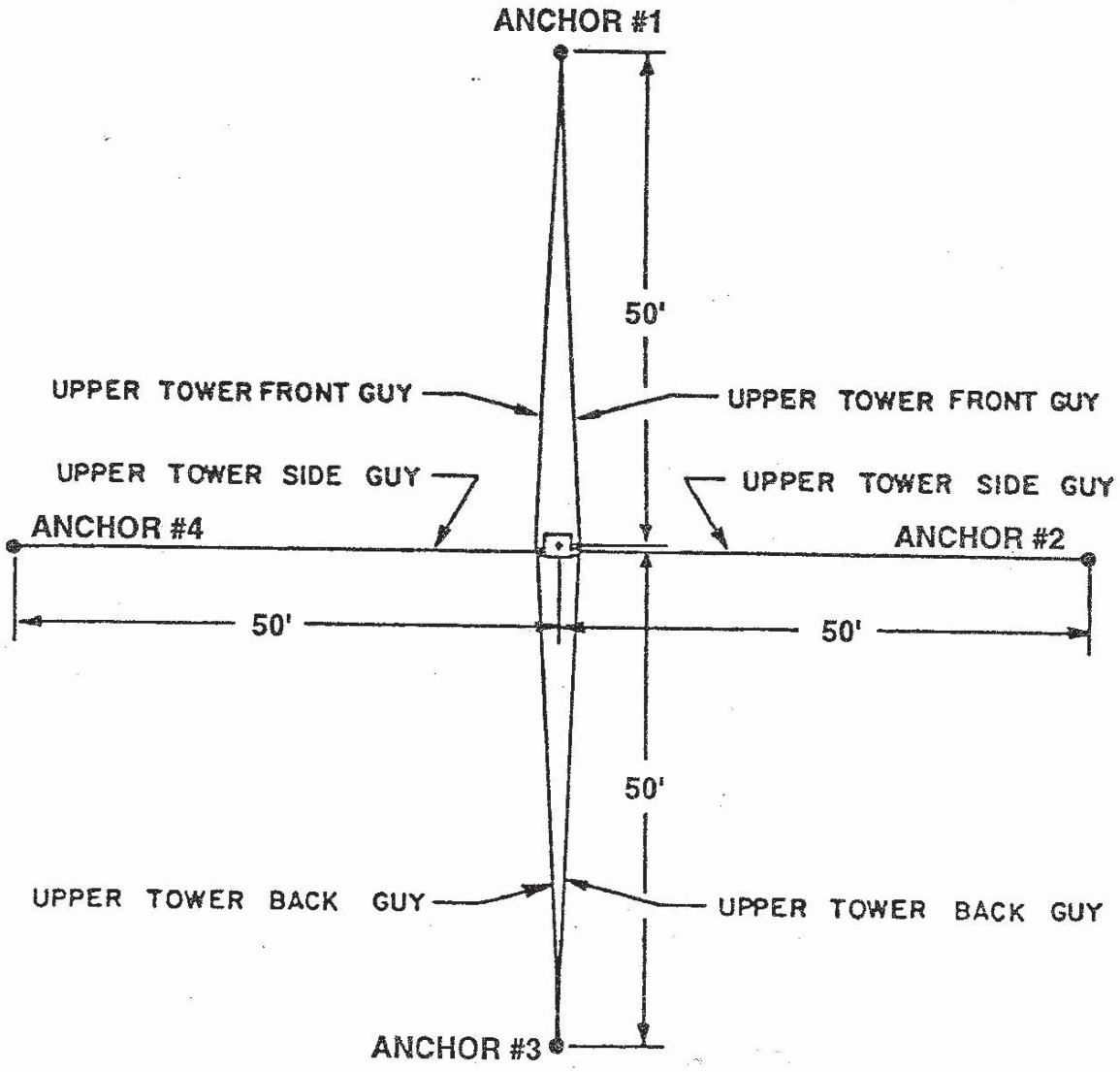

Figure 2-29
Upper Guy Cofiguration

r. After the tower is plumb and all personnel are familiar will all the procedures in a through q (see page 38), proceed to lower the tower to the ground.

s. Each man will take the position assigned during the erection procedure, and assume the same duties as during the erection of the tower.

t. If removed, attach the griphoist to its anchor. Place the telescopic lever on the power stroke lever and put tension in the pulling cable (Figure 2-30).

u. Release the tension on the front guy wires and remove the turnbuckles from the anchor.

v. One man at this time will remove the pin from the front leg of the tower at the base plate.

w. Place the lower front guy and the knee cables over the rollers at the top of the gin pole as shown in Figure 2-16, and connect the turnbuckles to the eyebolts on the base plate. Tension the cables.

x. The griphoist operator should begin to lower the tower, using slow, steady strokes of the reversing lever. The back guys will not require any adjustment. It will be necessary to again watch the side guys and adjust them whenever required during the lowering procedure to prevent tower misalignment, bending and bowing. Use only enough tension in the side guys to keep the tower straight. All orders will be given by the man in charge.

y. As the tower is lowered, guide the pulling cable into the "V" groove of the gin pole top plate assembly, making sure the wire rope clamps on the pulling cable are on the proper side of the "V" groove as shown in Figure 2-16. Lower the tower to the ground.

NOTE: Exercise care in keeping the guys in the proper relation to the antenna as the antenna is assembled. The guys may be disconnected from the tower if desired and must be reconnected after completion of the antenna assembly prior to erection, as shown in Figure 2-51.

CAUTION

DO NOT RELEASE THE TOP FRONT GUY UNTIL THE PULLING CABLE IS TAUT.

NOTE

ATTACH THE GRIPHOIST AND ITS CABLE TO THEIR ANCHORS AND CONNECT THE TACKLE BLOCK TO THE PULLING CABLE. TIGHTEN THE PULLING CABLE USING THE GRIPHOIST SO THAT THE PULLING CABLE AND THE TOP FRONT GUYS ARE EQUALLY TAUT. ONLY THEN MAY THE FRONT GUYS BE DISCONNECTED FROM ITS ANCHOR.

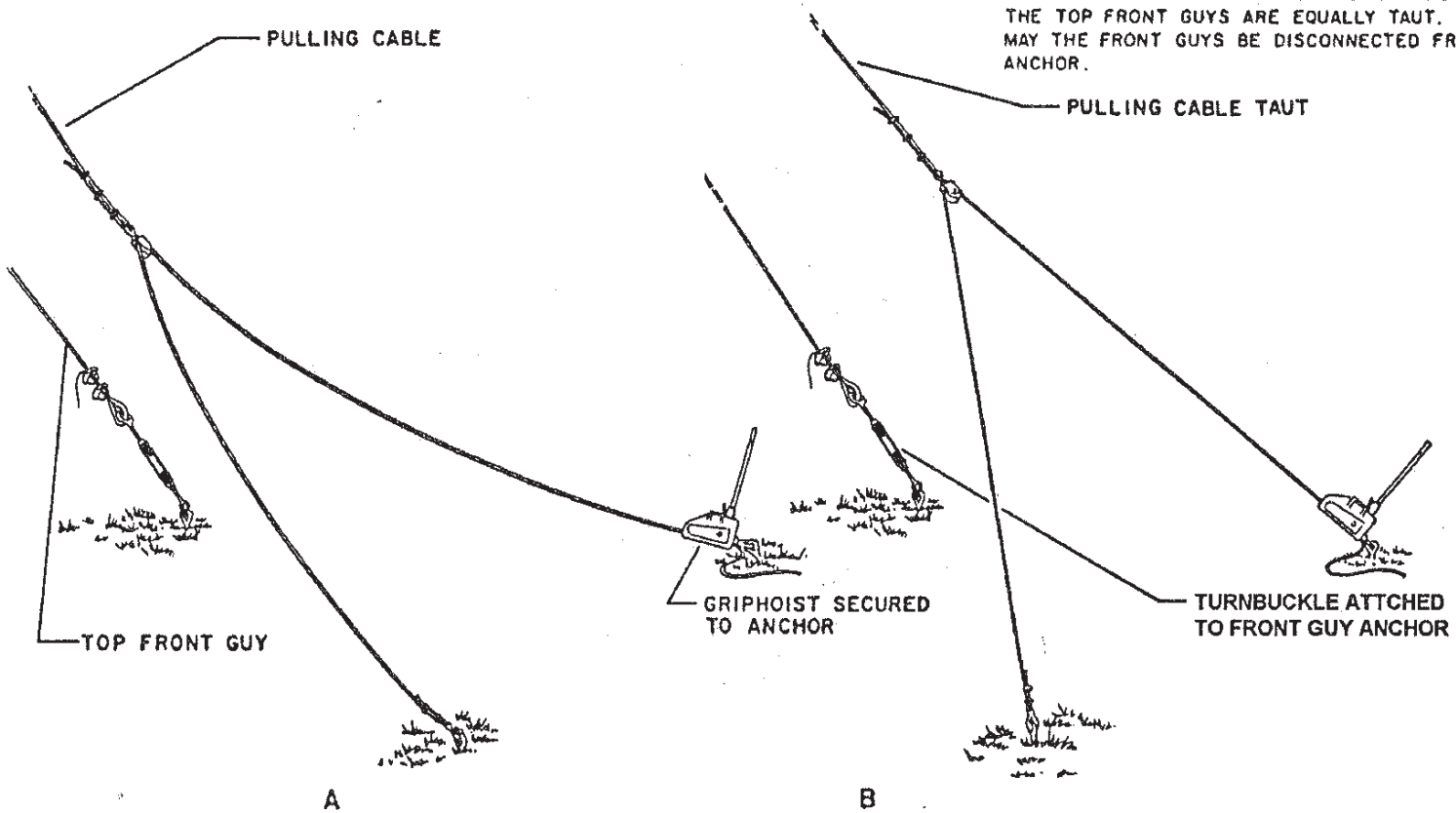

TO CONNECT (BEFORE LOWERING TOWER)

Figure 2-30
Griphoist Connection

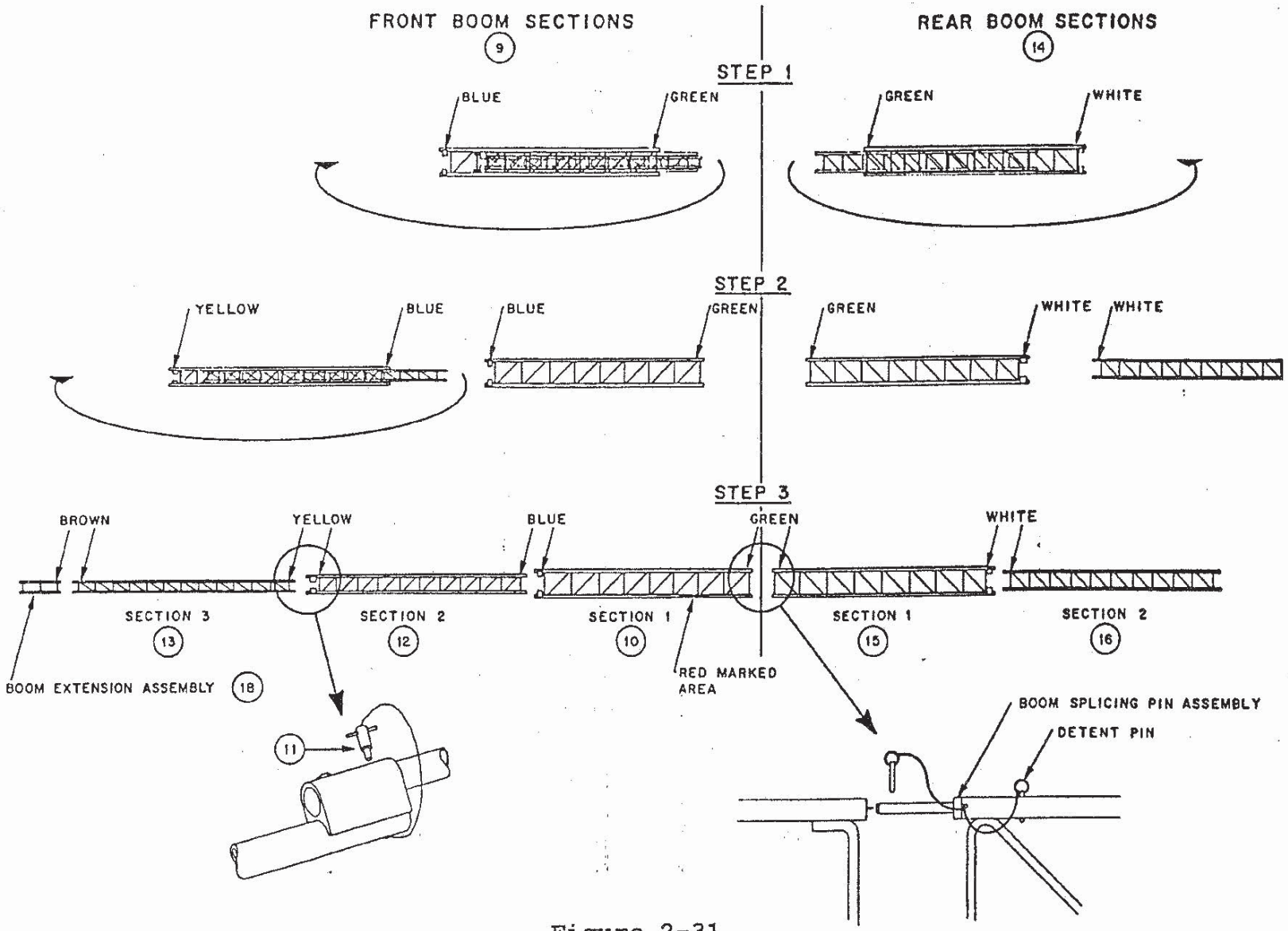

Figure 2-31
Assembly of Antenna Boom Sections

2-14. Assembling Boom and Antenna

a. At this time, the front nesting boom section assembly and the rear nesting boom section assembly will be removed from the crate. Assemble Section 1 of the front boom and Section 1 of the rear boom using the boom splicing pin assembly, as shown in Figure 2-31. The red-marked region on this middle section indicates the position where the boom is attached to the hinge plate.

b. The griphoist operator will raise the tower and rotator two or three feet off the ground with the griphoist to allow the two sections of the antenna boom to be easily slid under the tower (Figure 2-32).

NOTE: When the boom is attached to the rotator hinge plate, the color coded leg will be closest to the ground.

c. Pull the small hinge plate release cable (Figure 2-18) to unlatch the hinge plate while holding the hinge plate and lower the hinge plate to the horizontal position. Move the boom under the tower. Make sure the shortest end of the boom, color coded white, lays closest to the base plate assembly. Align the red-marked region on the boom with the hinge plate as shown in Figure 2-33.

d. One man will remove the six boom saddle block assemblies from the accessory box and assemble the red-marked region of the boom to the hinge plate as shown in Figure 2-33.

e. The griphoist operator will lower the tower slowly until the U-bolts can be aligned with the holes and attached securely to the holes in the antenna boom plate as shown in Figure 2-33.

f. Assemble the remaining boom sections as shown in Figure 2-31. A color coding mark has been applied to the top leg of each boom section. The end of each boom section should be assembled exactly as shown in Figure 2-31. These boom legs must all match so that when the boom is completely assembled, all the top legs will be marked with the appropriate color code marking. During assembly of the boom, the top leg will be on the bottom.

g. Two men will remove the boom extension assembly with feedline from the box and attach it on the end of the front antenna section as shown in Figure 2-34. The assembly will be completed in the same manner as the tower sections were assembled. Make sure that the hardware connections are secure on the tower, rotator and boom sections.

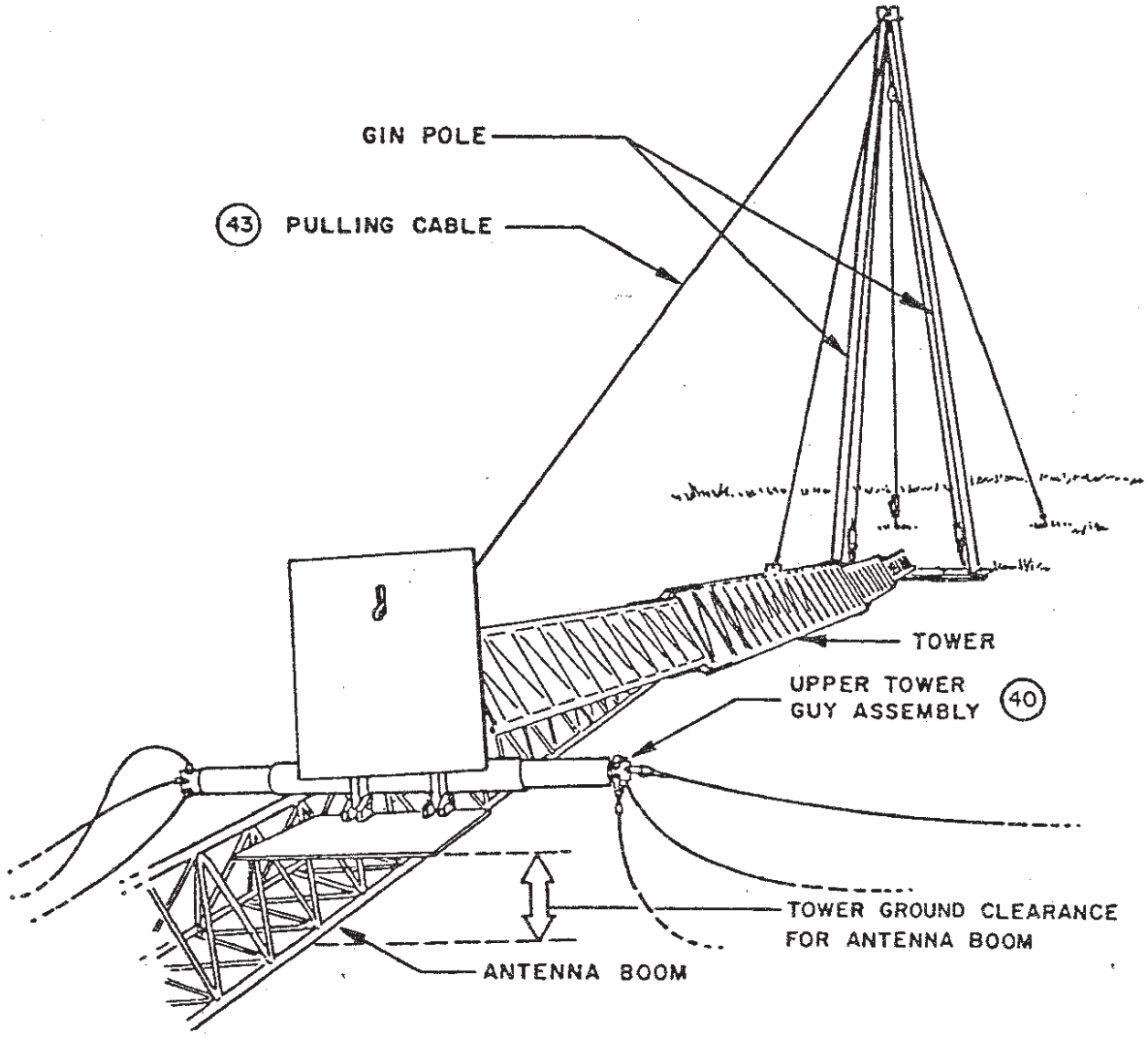

Figure 2-32
Raising Tower to Allow
Insertion of Boom Under Tower

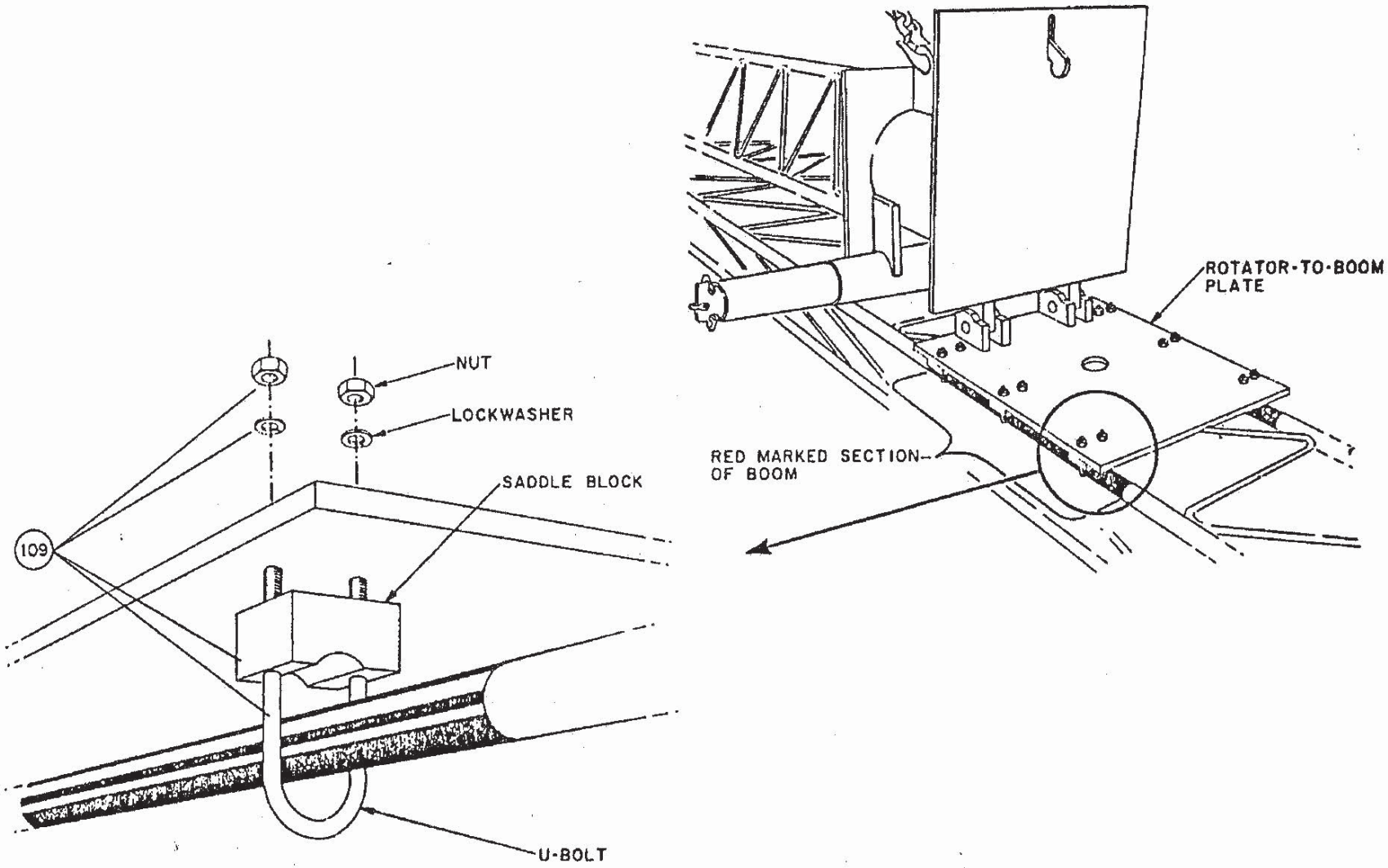

Figure 2-33
Rotator Attachment to Boom
and Saddle Block Attachment

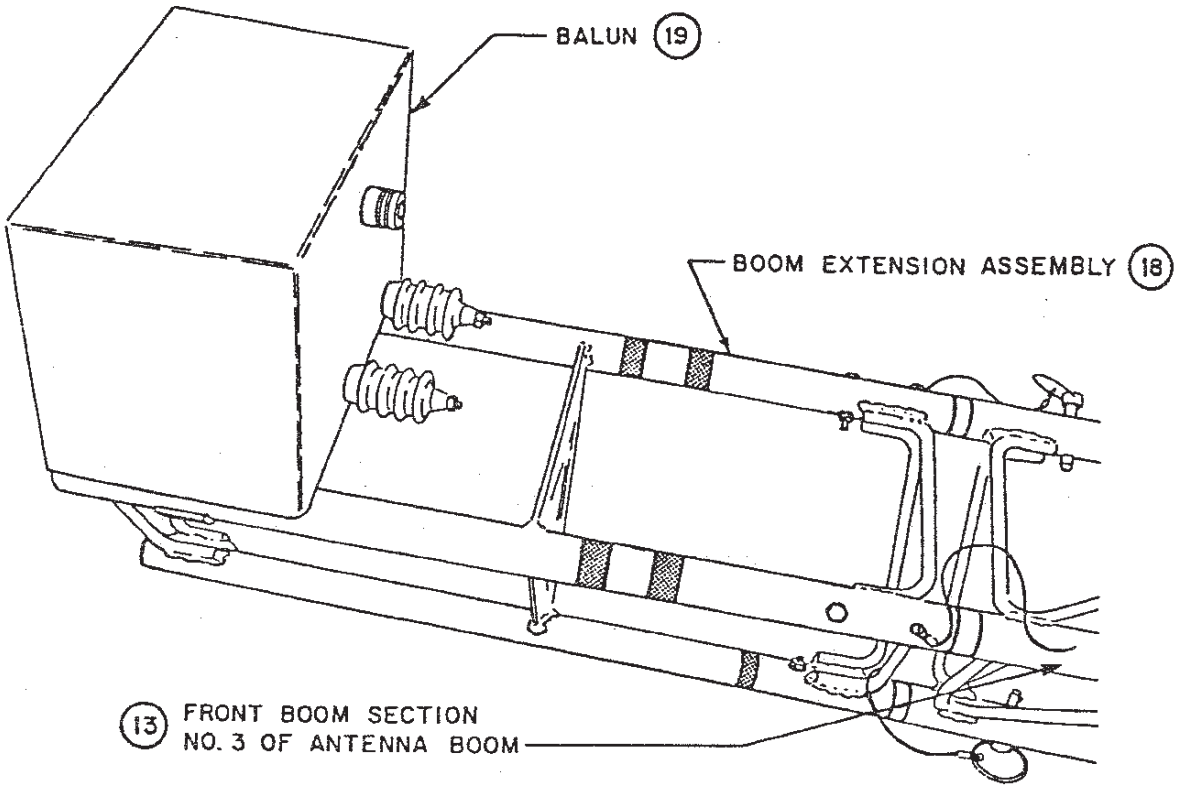

Figure 2-34
Attachment of Boom Extension to Boom

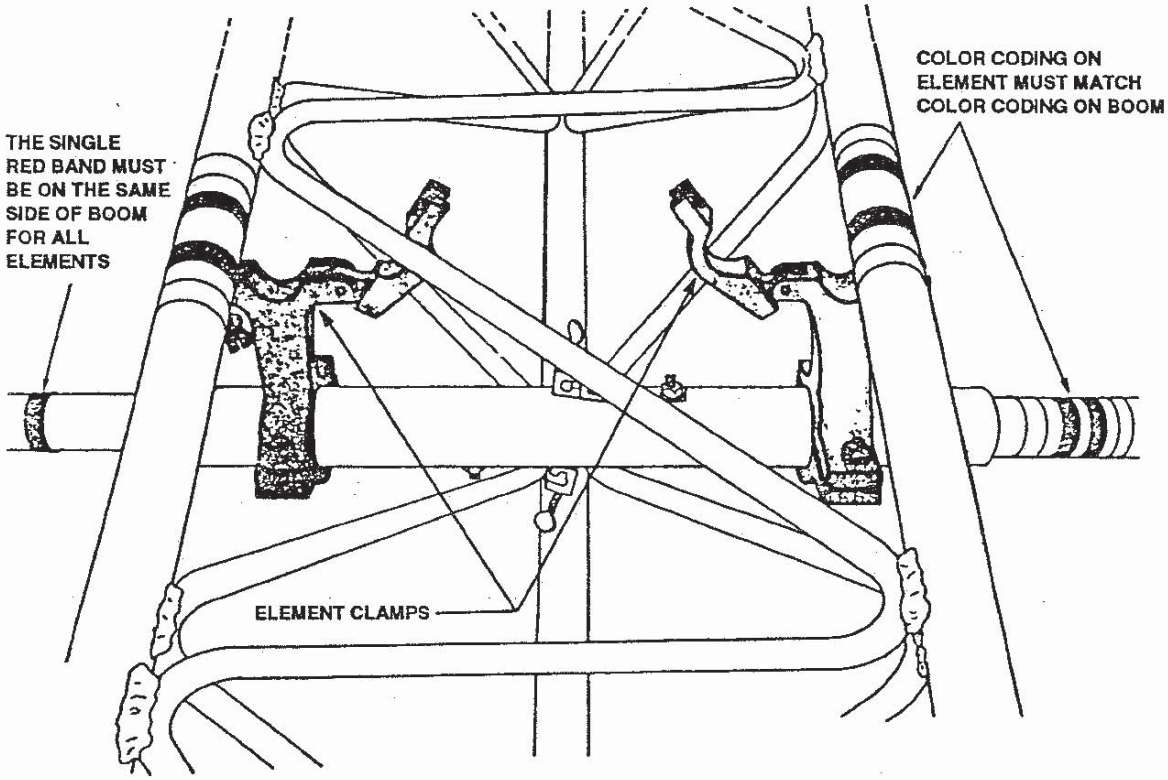

Figure 2-35
Locating Element Center Insulator Assemblies on Boom

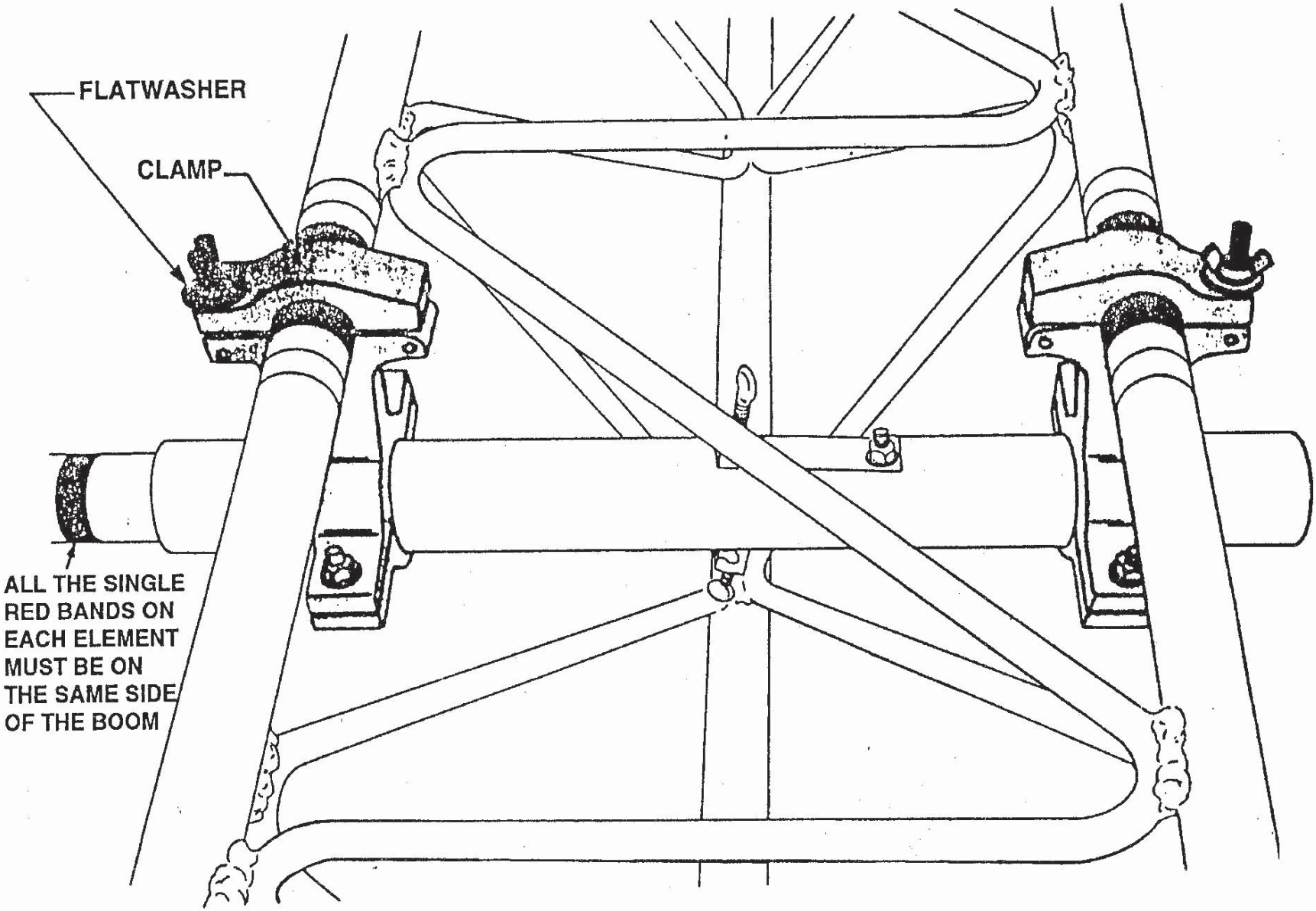

Figure 2-36
Securing Element Center Insulator Assemblies to Boom

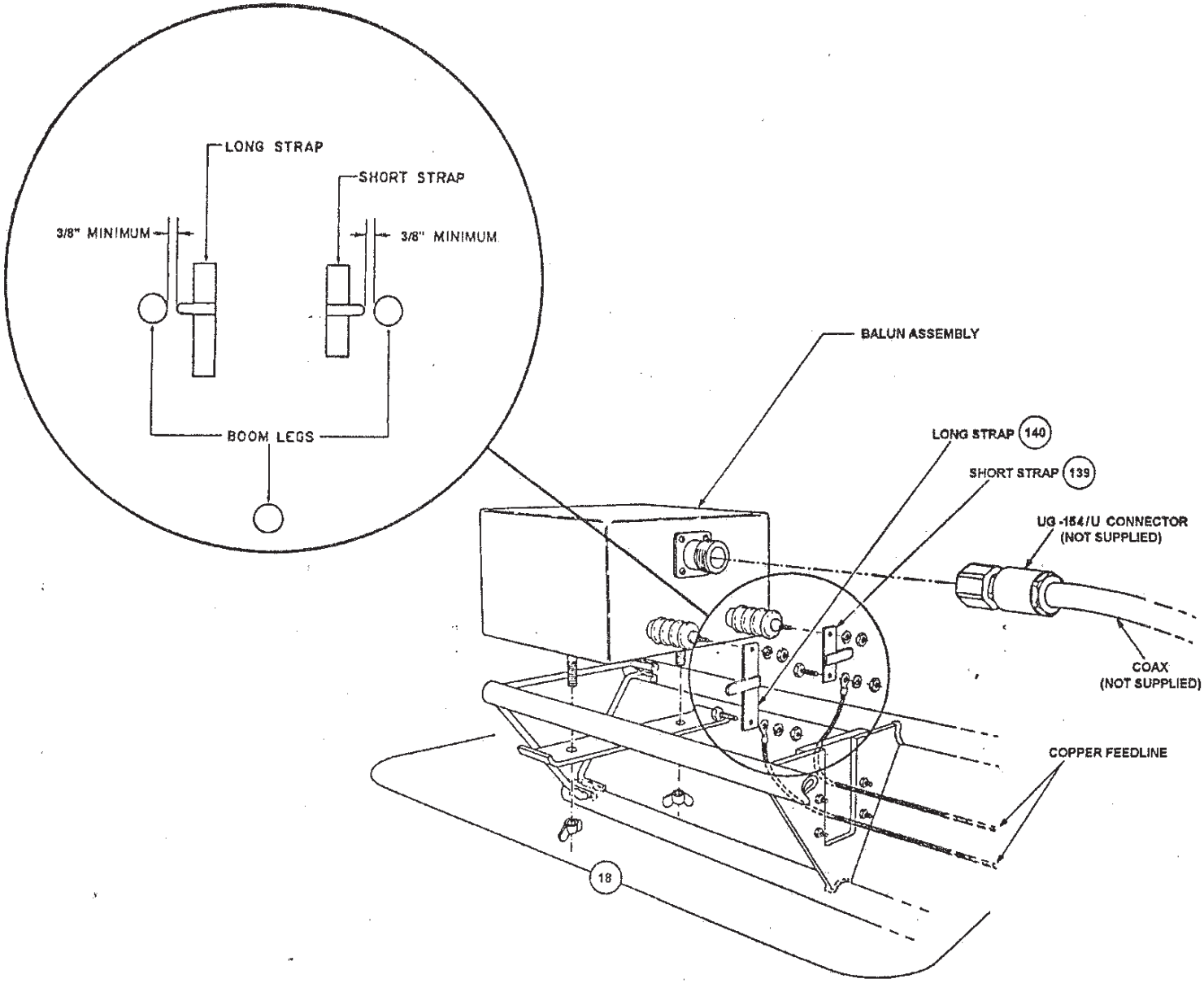

Figure 2-37
Feedline and Coax Connections to Balun

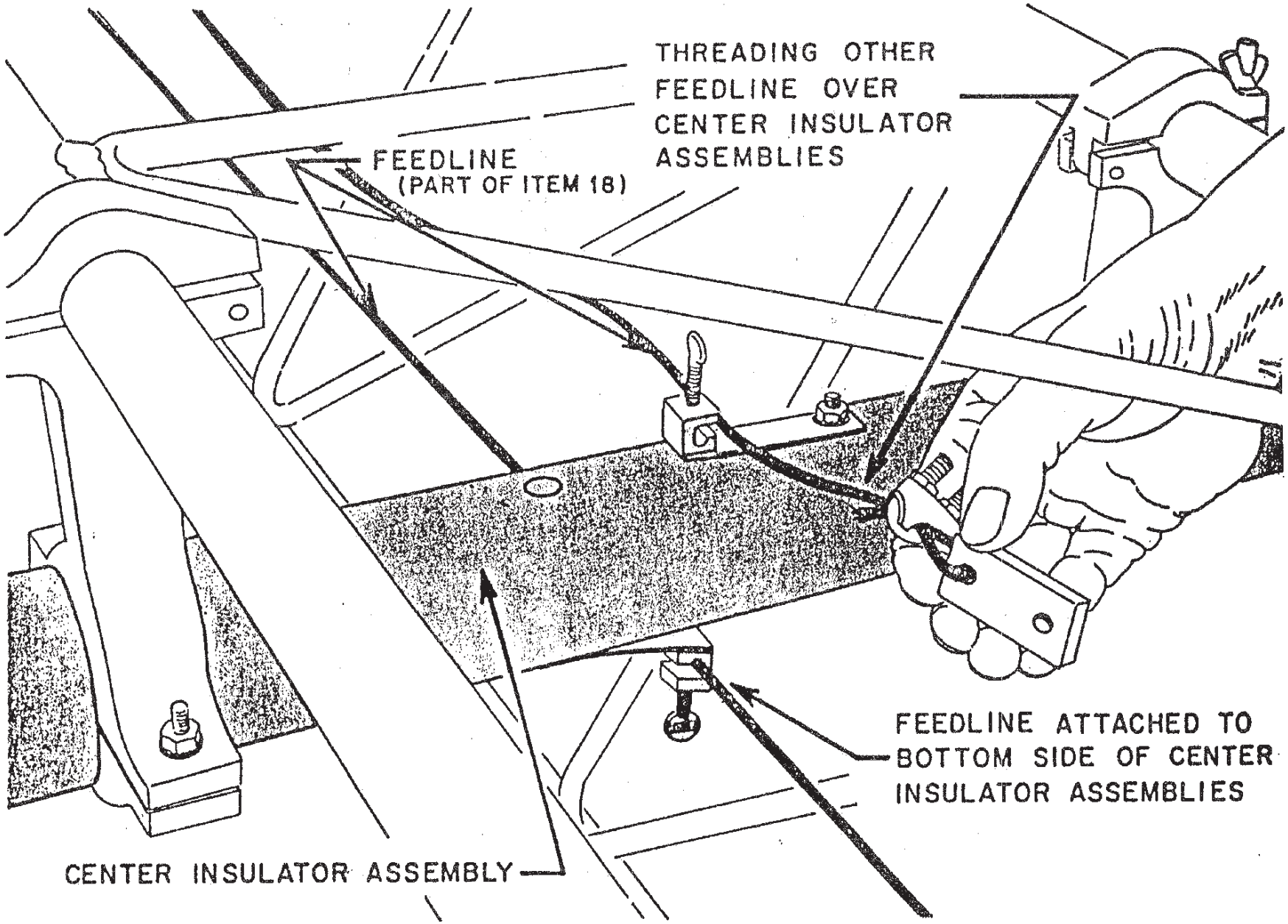

Figure 2-38
Threading Feedline Below and Above Center Insulators

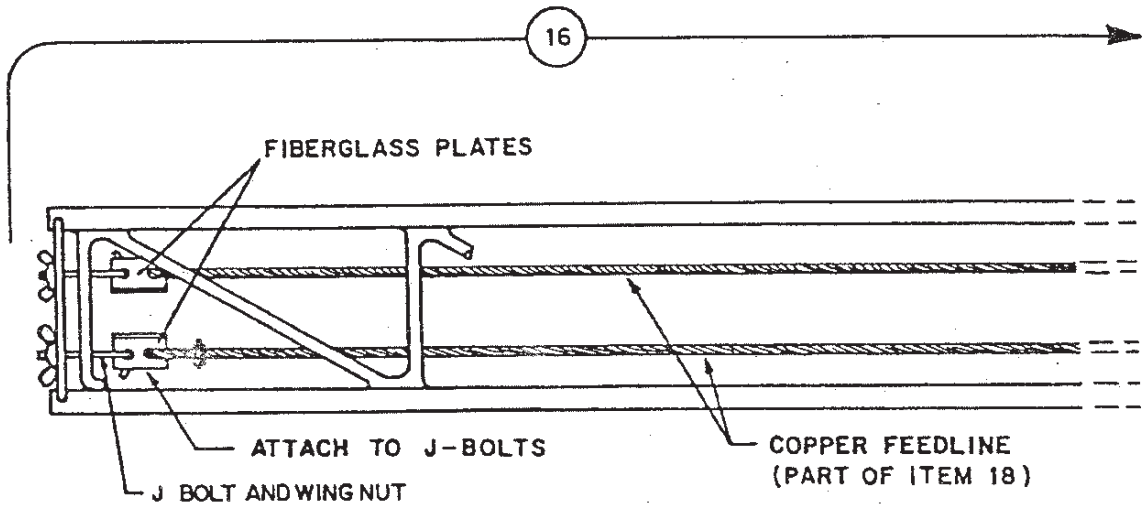

Figure 2-39
Attaching Feedline to Boom Plate

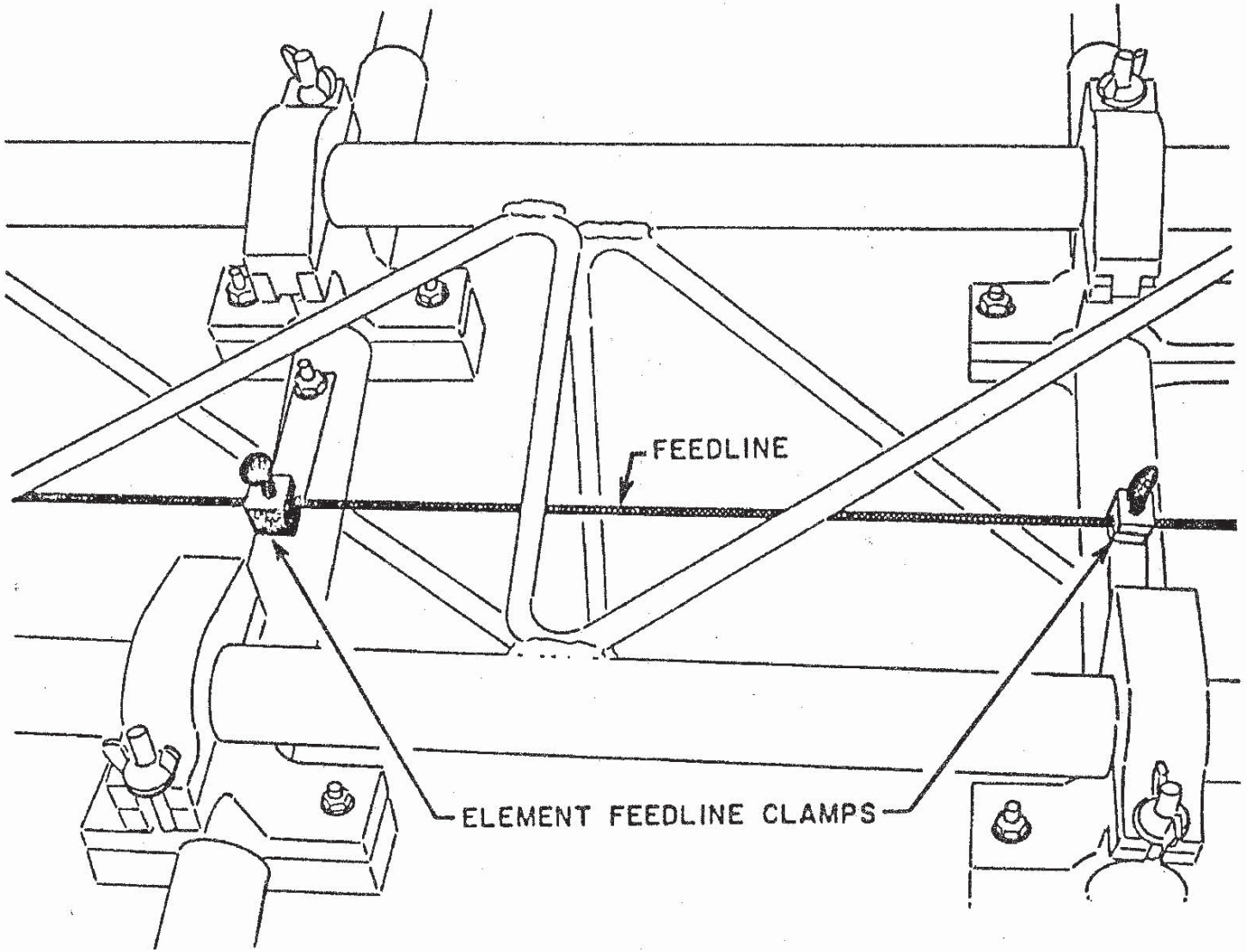

Figure 2-40
Feeline Cable Alternately Attached to
Center Insulators

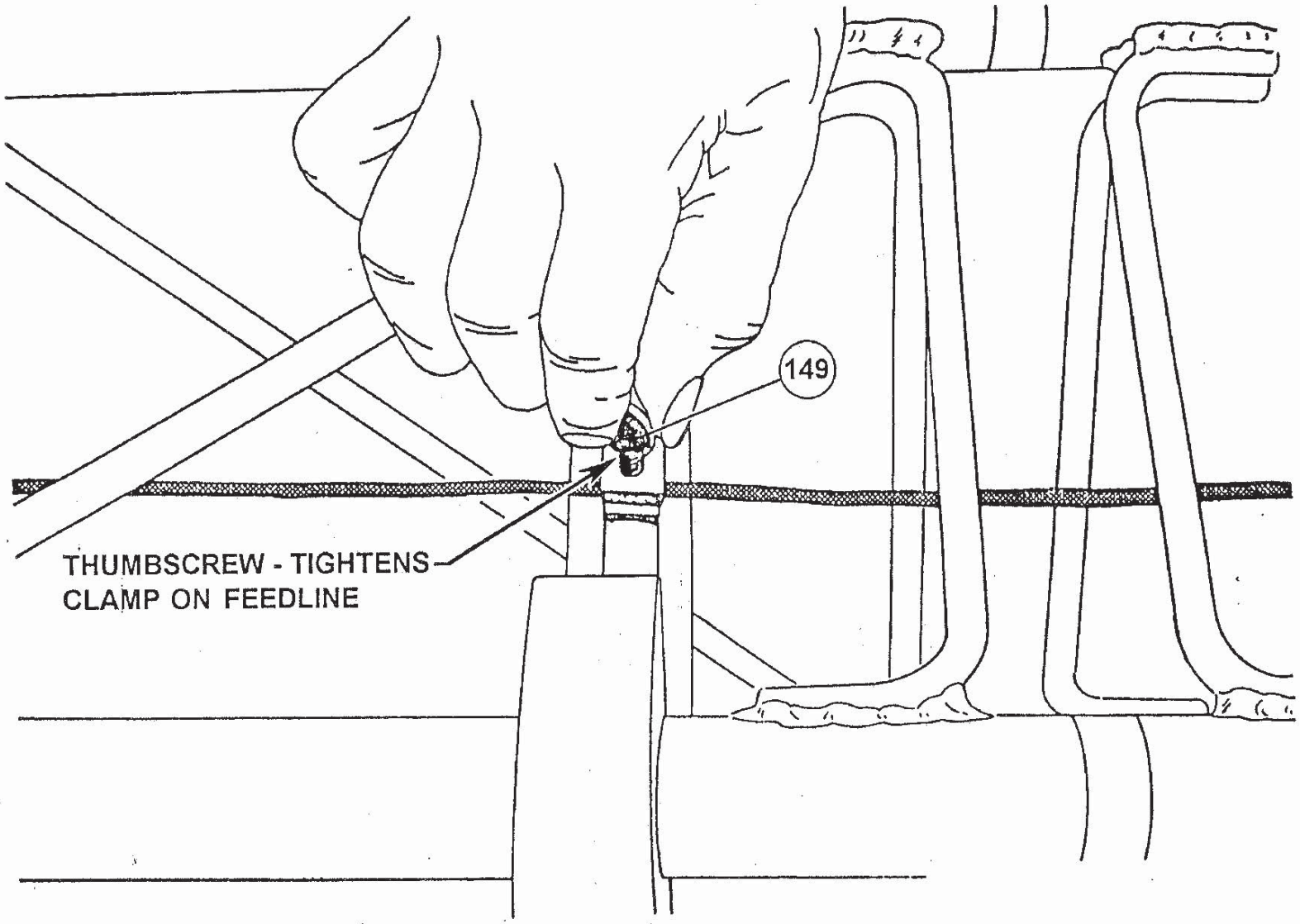

Figure 2-41
Fastening Feedline Cable to Center Insulator

h. Mount the 10kw balun assembly on the boom extension as shown in Figure 2-37. Inspect the balun to be sure it is filled with oil.

i. Two men now lay out the approximate location of all the element center insulators, making sure the color code identification on the element center insulators match the same color coding on the boom. The boom is marked for this purpose. Refer to Figure 2-35.

j Two men install the center insulator assemblies in their proper locations and secure them to the boom as shown in Figure 2-36.

k. The red band of all center insulator assembies must be on one side. This is very important to insure proper feedline hook-up and antenna operation.

l. Connect the solder lugs of the feedline (at the front end of the boom extension) to the balun insulators as shown in Figure 2-37.

m. Starting at the front end of the antenna, thread the copper cables through the entire length of the boom. The copper cables MUST be placed on each side of the center insulator assembly as shown in Figure 2-38. One should be placed on TOP of the center insulator and the other copper cable should be placed UNDER the center insulators and through each of the connectors.

n. Attach the end of the copper cable with the fiberglass plate to the jay bolts in the rear end of the boom triangle bracket as shown in Figure 2-39.

o. Refer to Figure 2-40 and attach the feedline to the element feedline clamp, alternating each connection as shown. Figure 2-41 shows hand tightening of the thumb screw to make a secure connection between each element and the feedline wire.

p. Make sure that all center insulator assemblies and feedline connections are securely attached to their proper locations..

q. Two men should now place all the element sections on the ground near the element center insulators. The end of the center insulators are color coded. The element sections which have a corresponding color coding must match up with the respective center insulator. Refer to Figure 2-42 and Tables 2-5 and 2-6 for aid in determining the exact element section and its respective color code.

ELEMENT SPLICE COLOR CODING

The Item Numbers (number enclosed within a circle) refer to the Item Numbers in the Parts List on pages 99 and 100.

ELEMENT NUMBER	COLOR CODE
5	YELLOW
4	BROWN
3	BROWN
2	BROWN

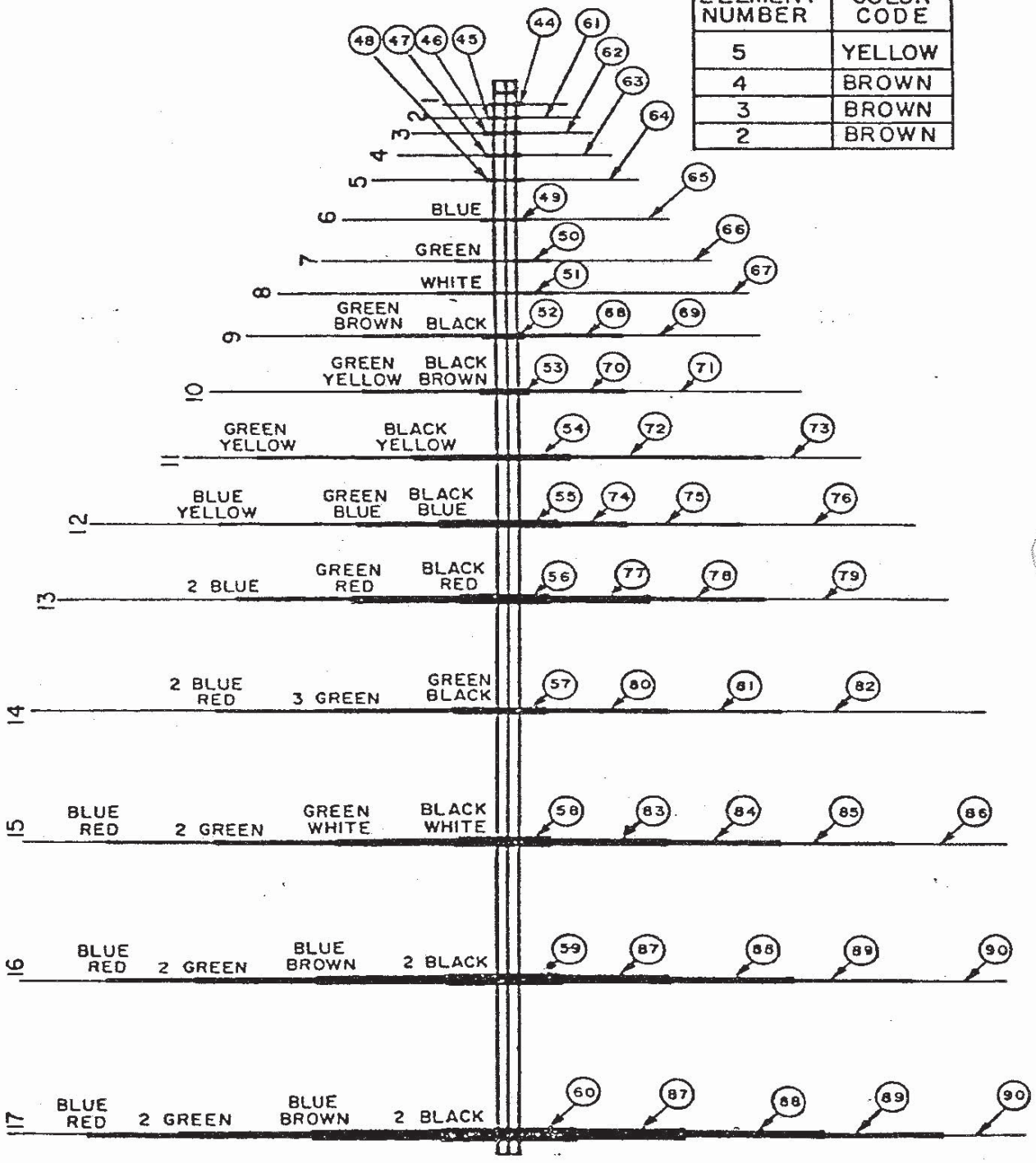

Figure 2-42
Element Splice Coding

KEY to Figure 2-42. Refer to the Parts List on pages 98 thru 101.

Item No.	Description	Item No.	Description
44	Center Insulator Assembly #1	55	Center Insulator Assembly #12
45	Center Insulator Assembly #2	74	Element Tube Assembly #12-2
61	Element Tube Assembly #2-2	75	Element Tube Assembly #12-3
46	Center Insulator Assembly #3	76	Element Tube Assembly #12-4
62	Element Tube Assembly #3-2	56	Center Insulator Assembly #13
47	Center Insulator Assembly #4	77	Element Tube Assembly #13-2
63	Element Tube Assembly #4-2	78	Element Tube Assembly #13-3
48	Center Insulator Assembly #5	79	Element Tube Assembly #13-4
64	Element Tube Assembly #5-2	57	Center Insulator Assembly #14
49	Center Insulator Assembly #6	80	Element Tube Assembly #14-2
65	Element Tube Assembly #6-2	81	Element Tube Assembly #14-3
50	Center Insulator Assembly #7	82	Element Tube Assembly #14-4
66	Element Tube Assembly #7-2	58	Center Insulator Assembly #15
51	Center Insulator Assembly #8	83	Element Tube Assembly #15-2
67	Element Tube Assembly #8-2	84	Element Tube Assembly #15-3
52	Center Insulator Assembly #9	85	Element Tube Assembly #15-4
68	Element Tube Assembly #9-2	86	Element Tube Assembly #15-5
69	Element Tube Assembly #9-3	59	Center Insulator Assembly #16
53	Center Insulator Assembly #10	87	Element Tube Assembly #16-2 & 17-2
70	Element Tube Assembly #10-2	88	Element Tube Assembly #16-3 & 17-3
71	Element Tube Assembly #10-3	89	Element Tube Assembly #16-4 & 17-4
54	Center Insulator Assembly #11	90	Element Tube Assembly #16-5 & 17-5
72	Element Tube Assembly #11-2	60	Center Insulator Assembly #17
73	Element Tube Assembly #11-3		

Refer to Figure 2-44 on page 64.

Element No.	"L" Distance		Distance From "A"	
	Feet & Inches	Metric Conversion	Measurement	Metric Conversion
1	5' 7½"	1.714m	3"	.0762m
2	6' 7"	2.006m	1' 3-11/16"	.3984m
3	7' 6"	2.286m	2' 4-1/8"	.7143m
4	8' 7½"	2.629m	3' 7-5/8"	1.1080m
5	9' 11"	3.022m	5' 2-1/16"	1.5763m
6	11' 4¼"	3.461m	7' 1/8"	2.1367m
7	13' 3½"	4.051m	9'	2.7432m
8	15' 4-3/4"	4.692m	11' 9-3/8"	3.5909m
9	17' 6-3/4"	5.353m	14' 2-1/8"	4.3211m
10	19' 11-3/4"	6.089m	16' 11-3/16"	5.1609m
11	22' 9-3/4"	6.953m	19' 8-13/16"	6.0150m
12	26' 4-3/4"	8.045m	23' 6-7/8"	7.1850m
13	31' 4"	9.550m	28' 9-5/8"	8.7788m
14	36' 11¼"	11.258m	34' 5¼"	10.4965m
15	45' 4½"	13.830m	40' 4¼"	12.2999m
16	47' 4"	14.427m	47' 5-3/8"	14.4621m
17	47' 11½"	14.617m	57' 6"	17.5260m

Table 2-5. Element Length and Spacing Distance

Element No.	Center Insulator Assembly Color Coding For Location of Elements on Boom
1	Brown
2	Yellow
3	Blue
4	Green
5	White
6	Brown and Yellow
7	Brown and Blue
8	Brown and Green
9	Brown and White
10	Brown and Brown
11	Yellow and Yellow
12	Yellow and Blue
13	Yellow and Green
14	Yellow and White
15	Blue and Blue
16	Blue and Green
17	Blue and White

Table 2-6. Center Insulator Assembly Color Coding with Boom

r. Refer to Figure 2-43 for element splice connection details. Note the matching color coding on the end of each tube.

s. Check all element lengths by referring to Table 2-5 and Figure 2-44. Each element must be the exact length as specified in Table 2-5.

t. Figure 2-45 identifies the antenna coax. The coax connects directly to the 50 ohm coaxial input connector (Type LC) on the balun as shown in Figures 2-37 and 2-45.

u. Attach gripper clips to the boom leg and tower leg as shown.

NOTE: Leave enough slack in the coax to allow for boom rotation.

v. One man now attaches the rotator stop rope (identified in Figure 2-46) to the rotator. He then threads the rope down the middle of the tower, as shown in Figure 2-47, and snaps it to the ring on the rotator (Figure 2-48). The black rope on the handle is tied to one of the tower legs about 5 feet (1.5 m) from the tower base.

w. One man attaches the hinge plate release rope (identified in Figure 2-46) to the rotator as shown in Figure 2-49, being careful not to get it tangled with any elements or feedlines.

WARNING

The hinge plate release rope must be placed along the antenna boom; NOT the tower. This is done to avoid confusion between the rotator stop rope and the hinge plate release rope when the antenna system is completely erected and as azimuth change is required.

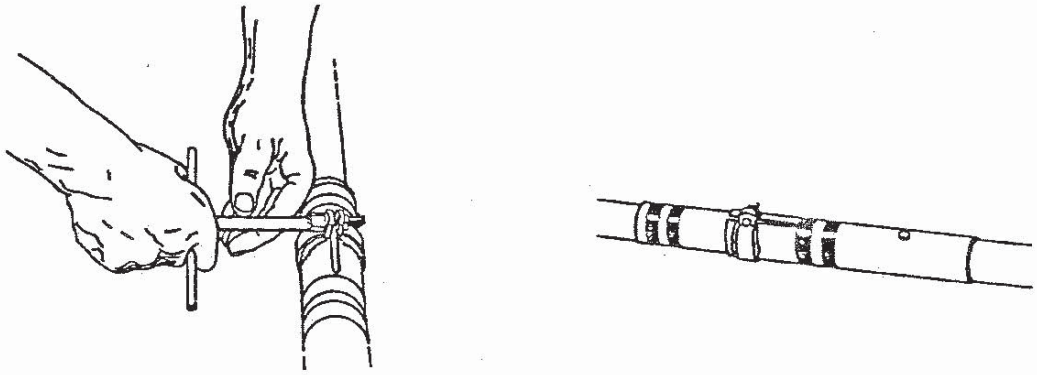

Figure 2-43
Element Splice Tightened and
Completed Splice

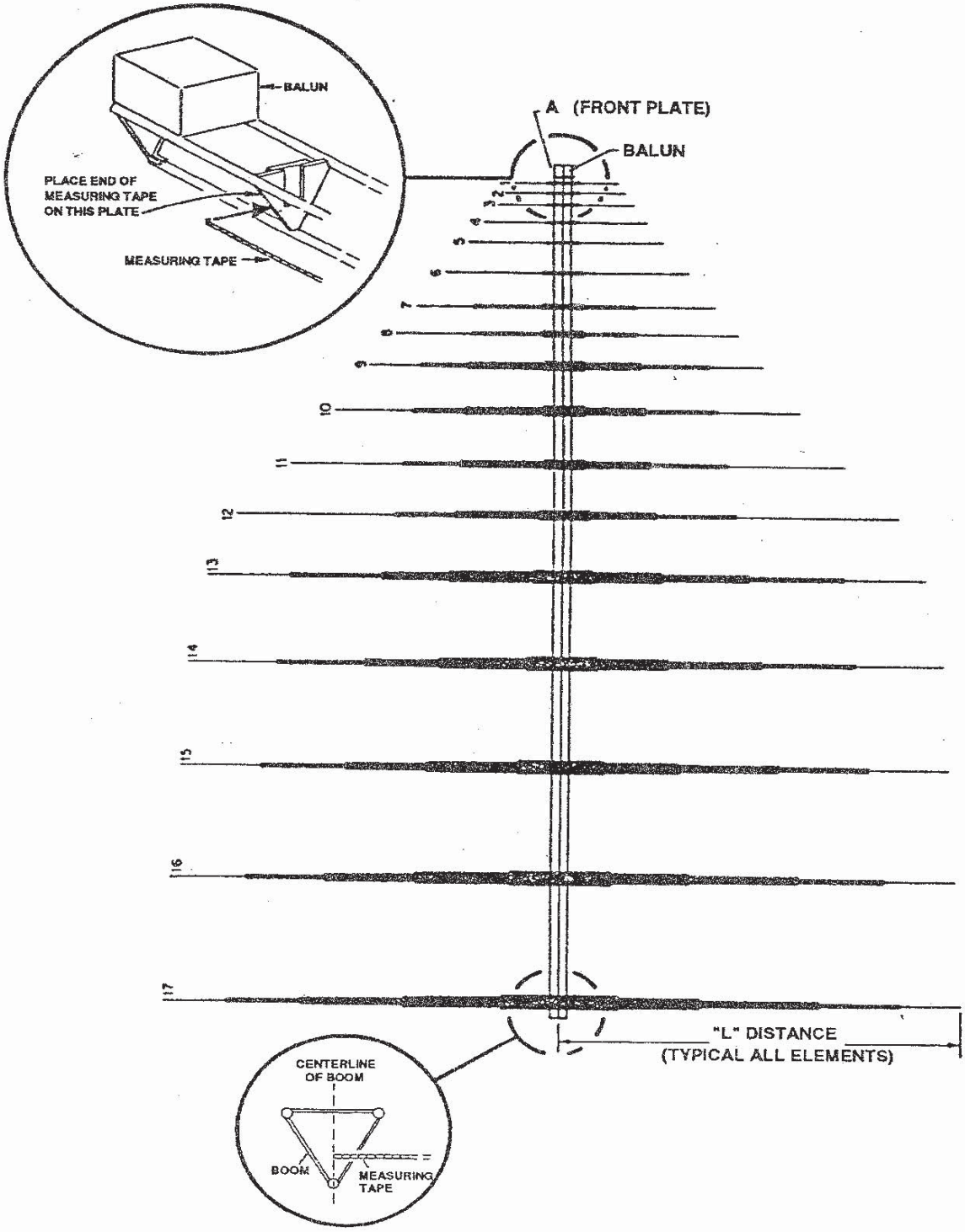

Figure 2-44
Element Lengths

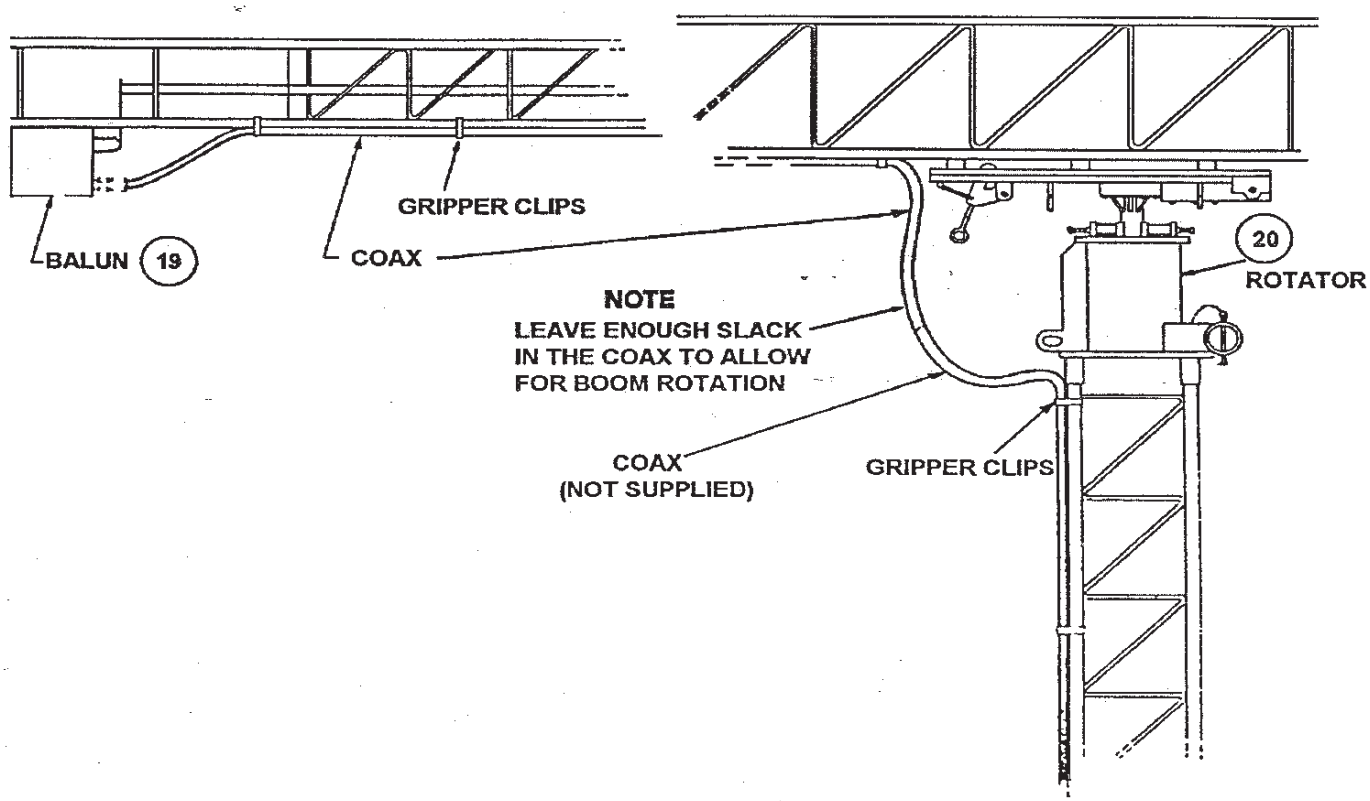

Figure 2-45
Coax Identification
and Routing

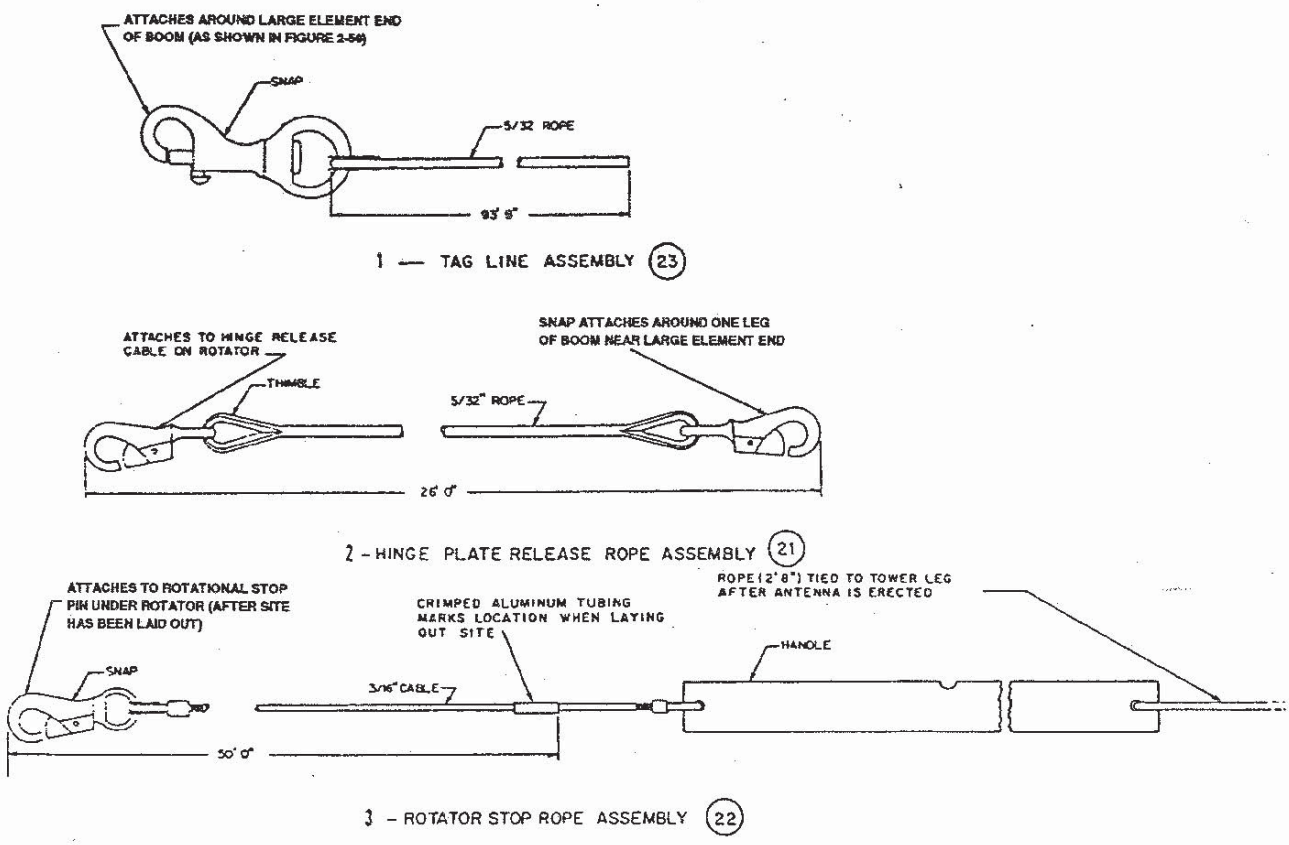

Figure 2-46
Rope Identification

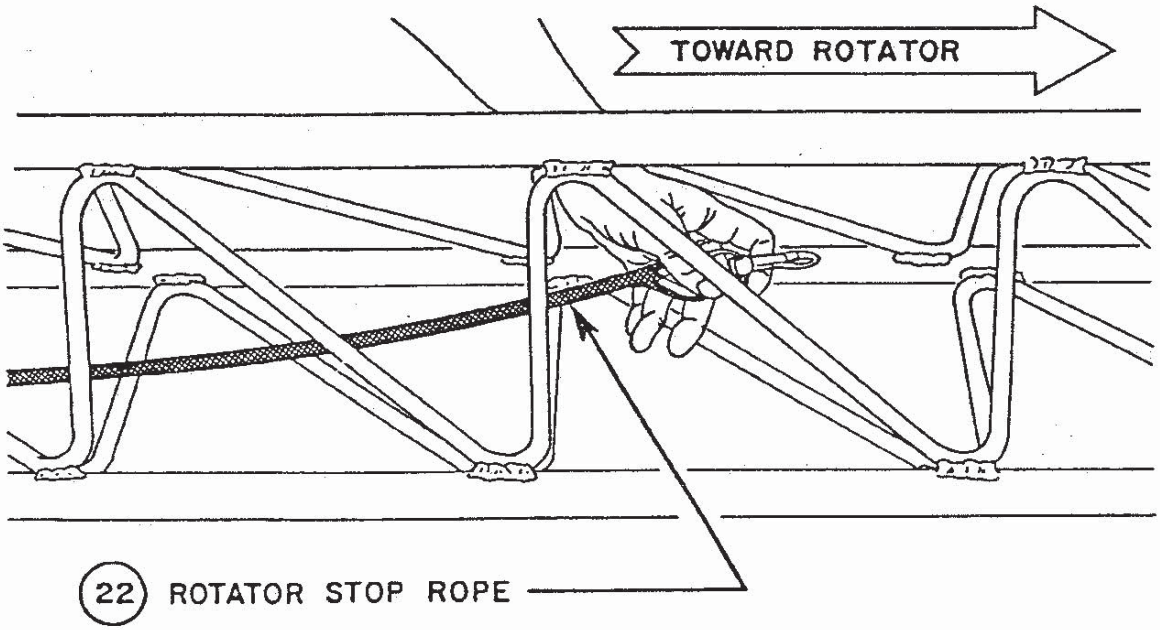

Figure 2-47
Threading Rotator Stop Rope
Through Tower

x. ~~One man shall tie the two tag lines (idenified in Figure 2-46)~~ on the rear of the boom as shown in Figure 2-50. These will then be laid out in a manner that will not interfere with the tower guys during erection procedures.

y. At this time, any guys previously disconnected from the tower or the base of the antenna assembly must be reconnected.

z. The back guys, side guys, and front guys should now be checked for position in relation to the antenna boom and elements as shown in Figures 2-51 and 2-52. The side guys should lay on top of the element assemblies and should be attached to the side guy anchors. The upper back guy assemblies should lay over elements 14, 15, 16, and 17 and then be doubled back under the element assemblies toward and connected to the back guy anchor.

aa. Apply slight tension on the side guys as done previously when the tower was raised.

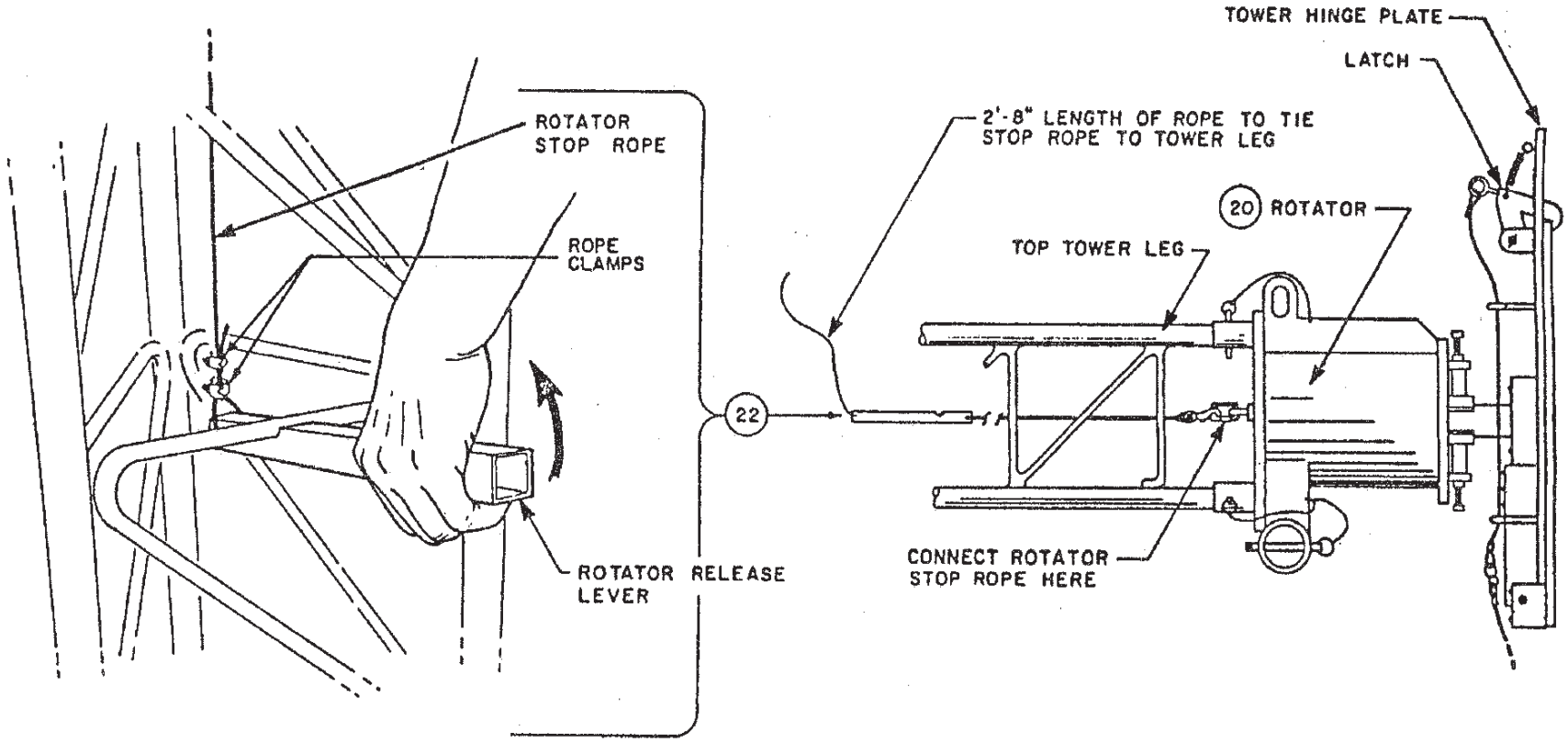

NOTE
NO TENSION SHOULD BE ON THE TAG LINES WHEN THE ROTATOR STOP ROPE IS PULLED

Figure 2-48
Attaching Rotator Stop Rope to Rotator

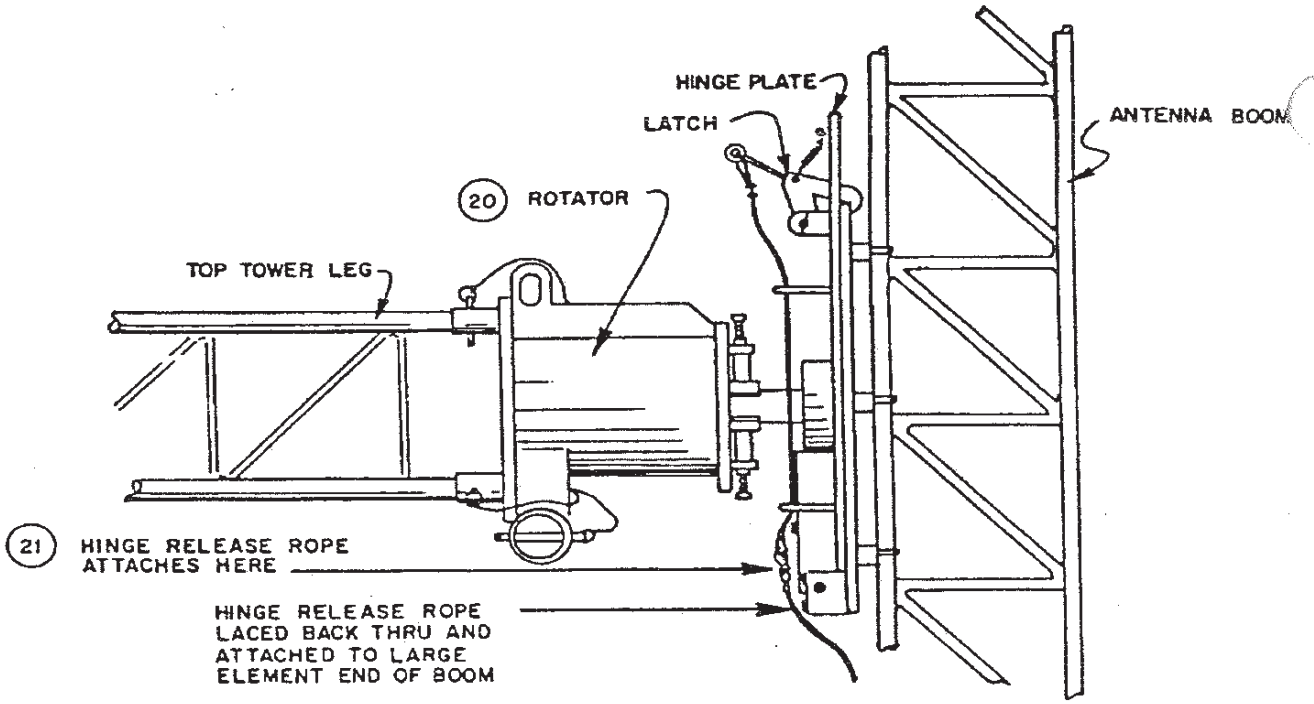

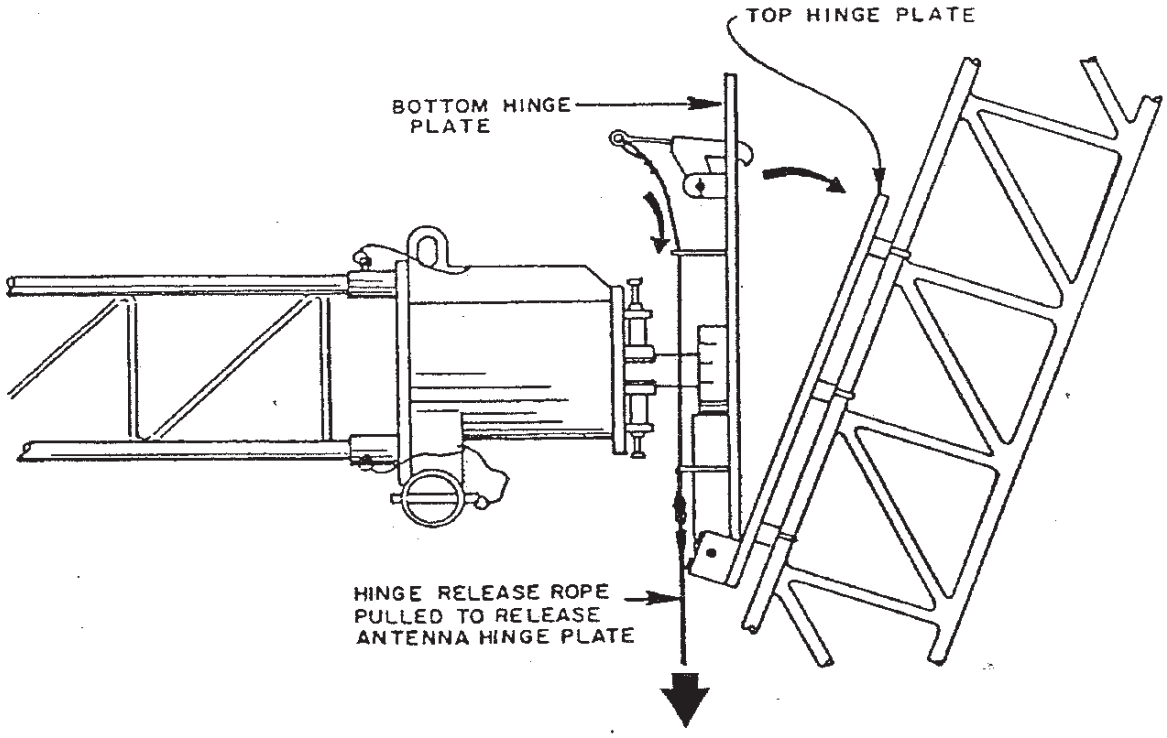

Figure 2-49
Hinge Plate Release

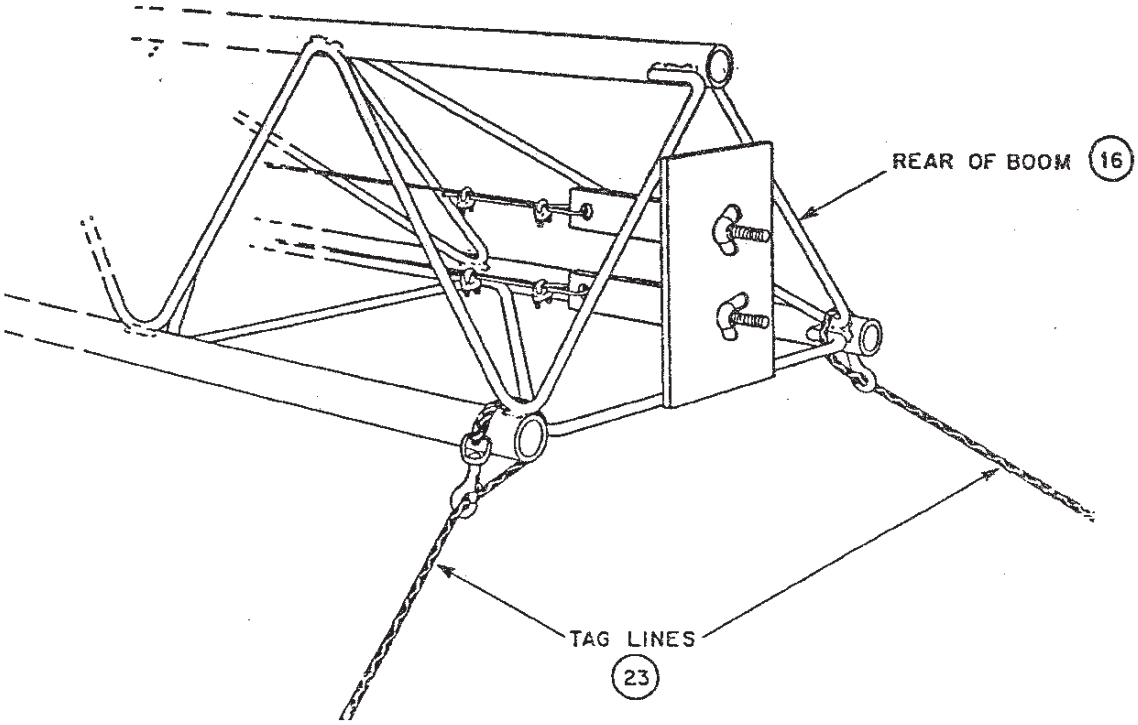

Figure 2-50
Tag Lines to End of Boom

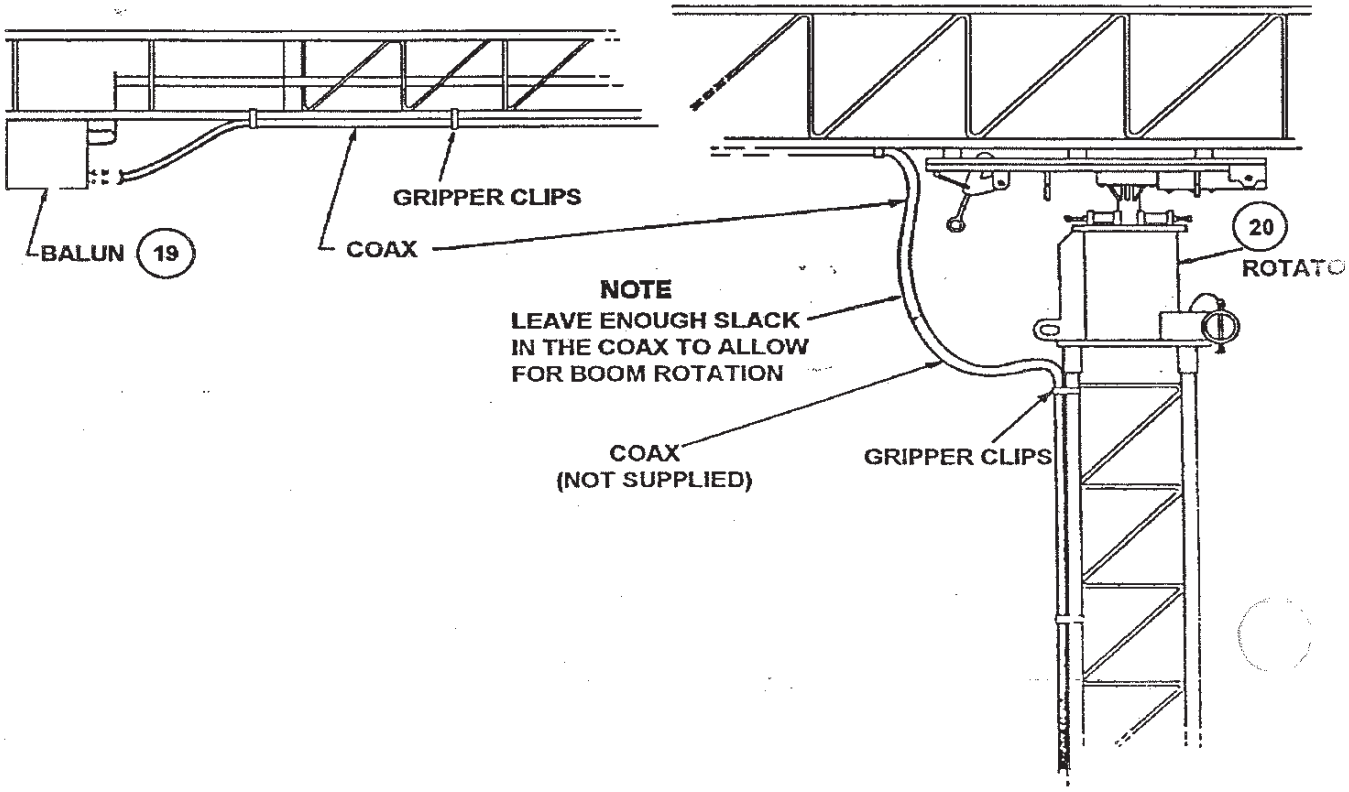

Figure 2-45 — 2
Coax Identification
and Routing

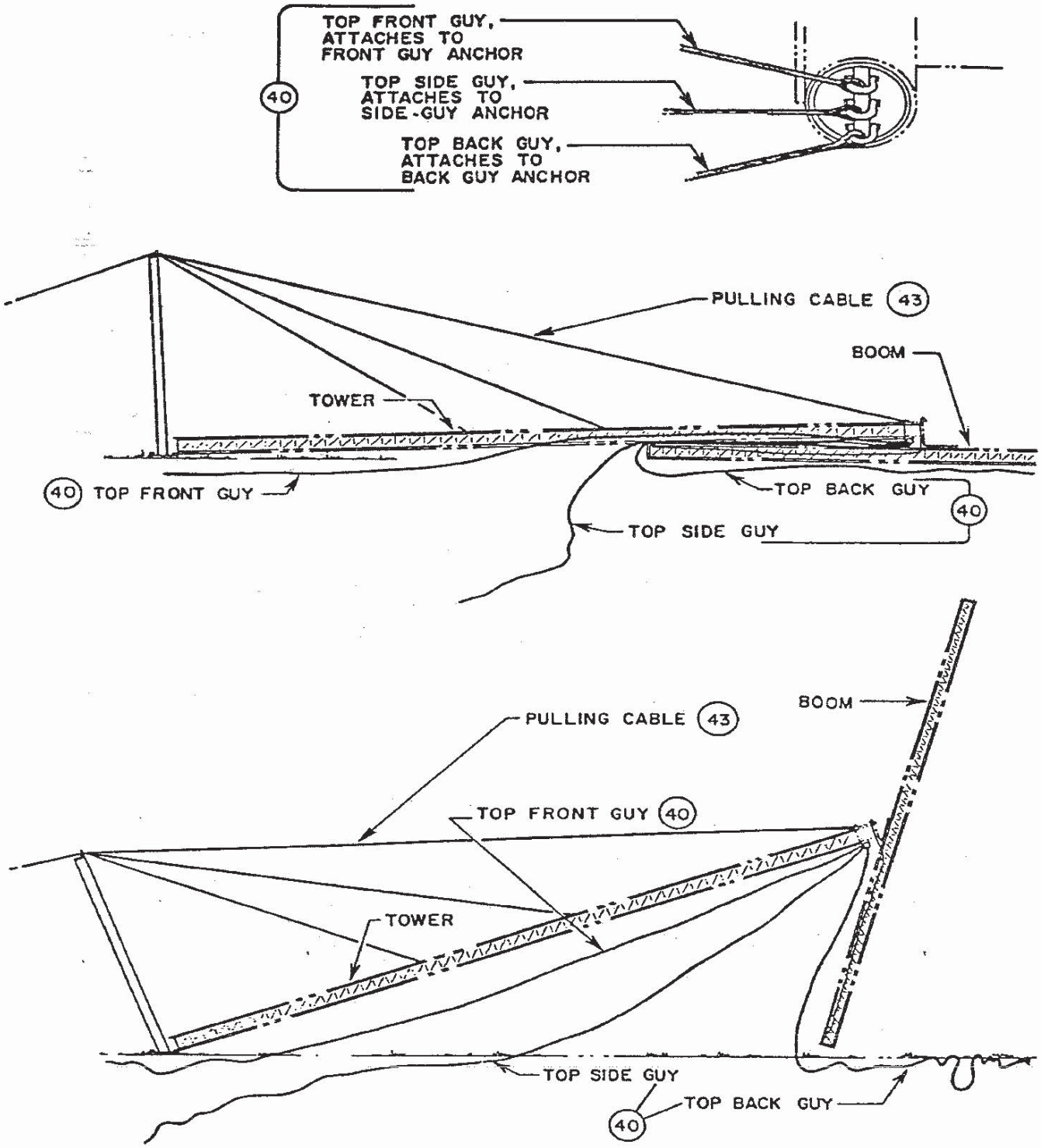

Figure 2-52
Laying Out Upper Back Guy
Prior to Erection

CAUTION

Never raise the tower or gin pole when the wind is in excess of 30 mph.

2-15. Raising the Antenna System.

a. The antenna system will now be erected using similar procedures and observing all the CAUTIONS and WARNINGS as during the preliminary raising of the tower (para. 2-13, page 38).

b. One man positions himself at the griphoist, and one man will be stationed at either side guy anchor. Two men will stand near the rear end of the boom, one on each side of the tower (Figure 2-53).

c. The duties of the men stationed at the boom will be

(1) Raise the boom to clear obstacles on the ground as the tower is being raised (Figure 2-54).

(2) One man will make tension adjustment to the unattended side guy when ordered by the griphoist operator.

(3) Latch the boom.

d. The griphoist operator will slowly raise the tower until it just leaves the ground, he will then make sure that the tower is straight.

e. He will order adjustments to the side guys and knee cables as required until the tower is straight.

f. Continue raising the tower as in paragraph 2-13 until the boom is clear of the ground.

CAUTION

Do not pull on the antenna elements to control latching. Take extreme care to be sure that the coax does not kink or in any way become damaged when latching the boom.

g. One man hoists the tower and antenna system high enough to allow the second and fourth man to latch the antenna to the rotator-to-boom plate by pushing the rear end of the antenna boom away from the tower as shown in Figure 2-55.

NOTE: The antenna must latch securely. If the boom moves away from the rotator when the large element end is pushed back toward the tower base, a secure latch did not take place.

h. If a successful latch did not take place, push the rear end of the boom away from the tower for another attempt to secure the antenna boom to the rotator. A successful latch has occured when the boom will not move or separate from the tower hinge plate.

i. After the antenna is securely latched, tie off the hinge plate rope assembly to the leg of the boom. Make sure there is not tension on this hinge plate rope. Figure 2-56 shows a general view of the antenna with the boom properly latched, and the tower almost erect.

j. When the pulling cable is about to lift from the gin pole top plate, reduce the tension in the knee cable and the front mid tower guy. Use the quick tension device at the base plate to allow the pulling cable to lift out of the gin pole slot freely and smoothly.

k. Two men will operate boom tag lines until the antenna is up.

l. The men located at the rear anchor will insure that the top and rear guys are attached to the rear guy anchor as shown in Figure 2-56.

m. When the tower is erect, plumb the tower following the procedures in paragraph 2-13, k through q (see page 38).

n. If the antenna is to be left erected for more than one day, it is recommended that the griphoist be stored to prevent the accumulation of dirt in the mechanism.

NOTE: If possible, cover the griphoist or store it in a bag to prevent dirt accumulation.

o. When the griphoist is removed, the pulling cable can then be tied off near the base of the tower or tied to either of the erection anchors or front guy anchor. A 40 foot length of 5/32 polyethylene rope is supplied for this purpose.

p. Figure 1-1 shows Antenna System 1112MR completely erected and properly guyed.

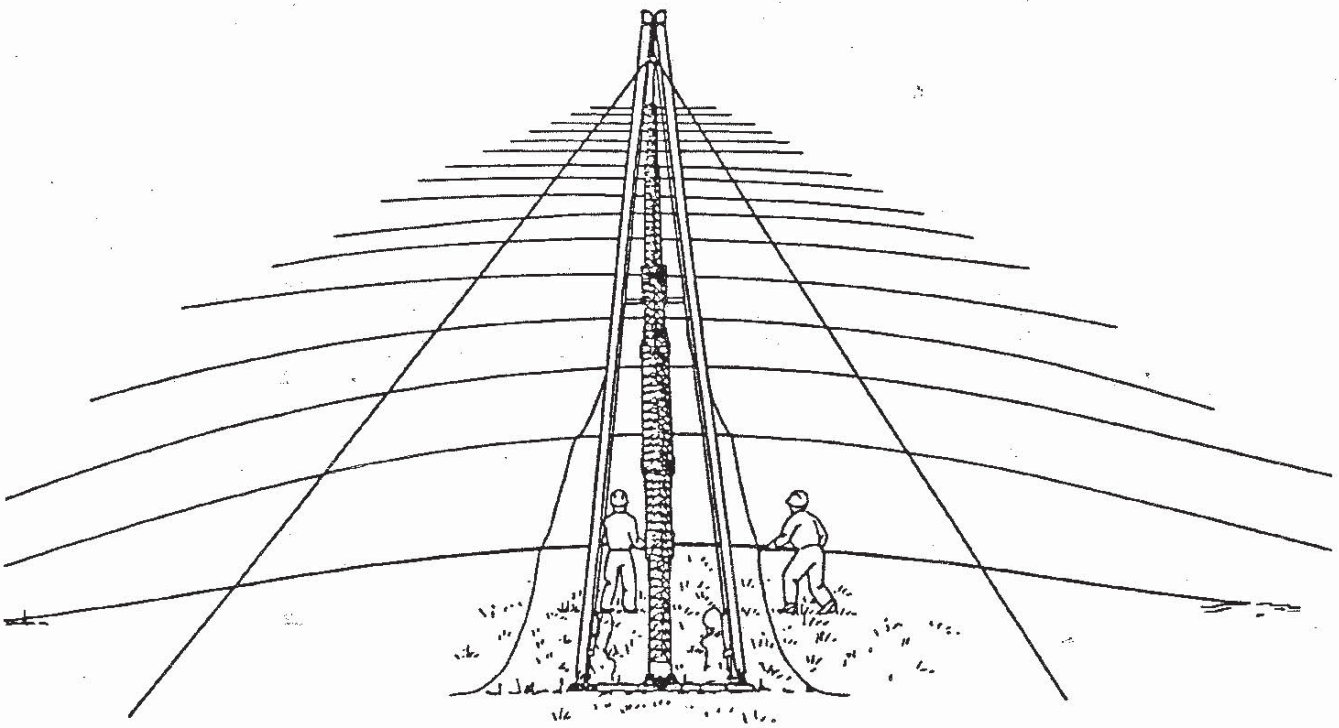

Figure 2-53
Keeping Antenna System in Line with Gin Pole and Pulling Cable

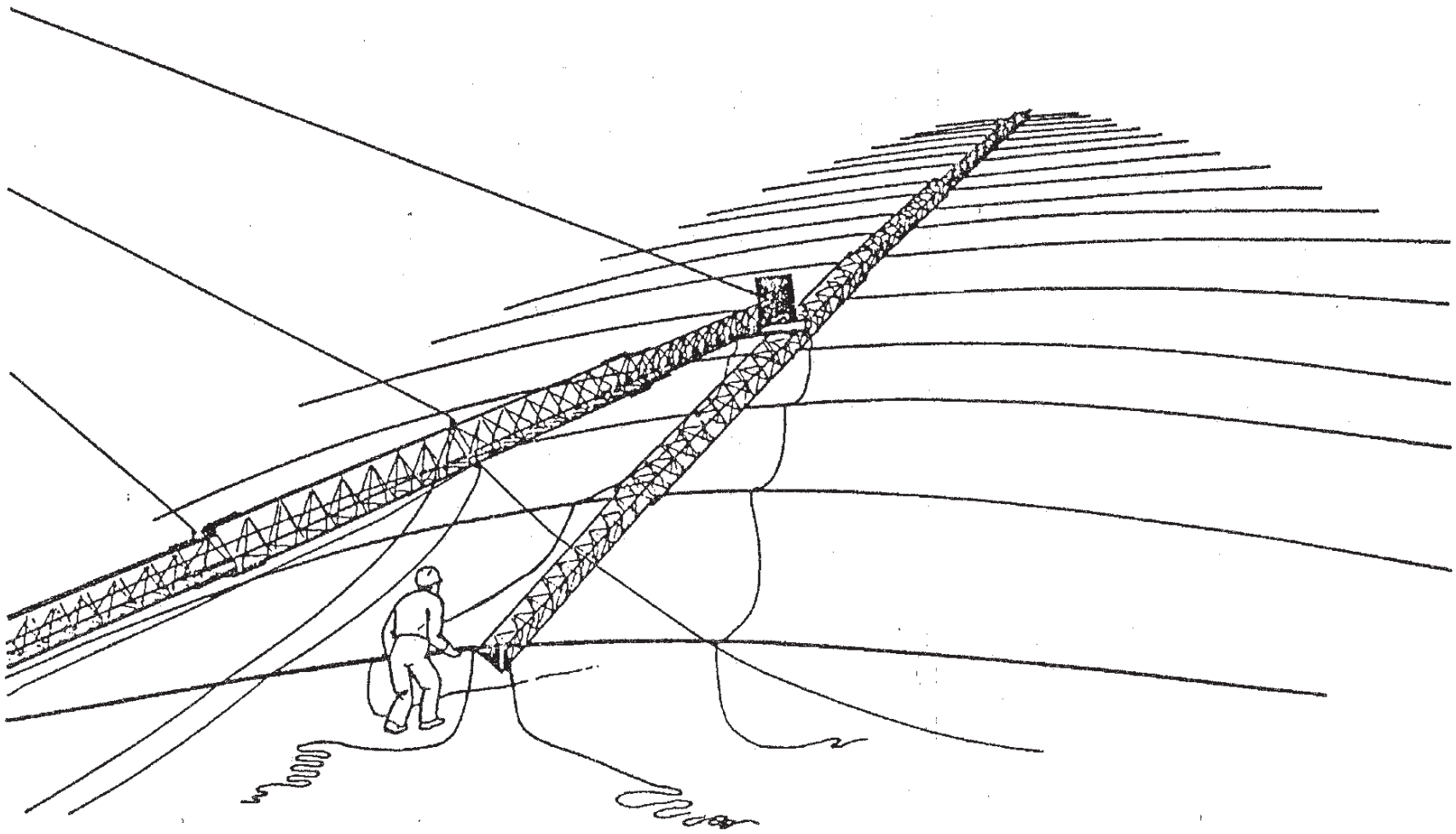

Figure 2-54
Initial Raising of Antenna System

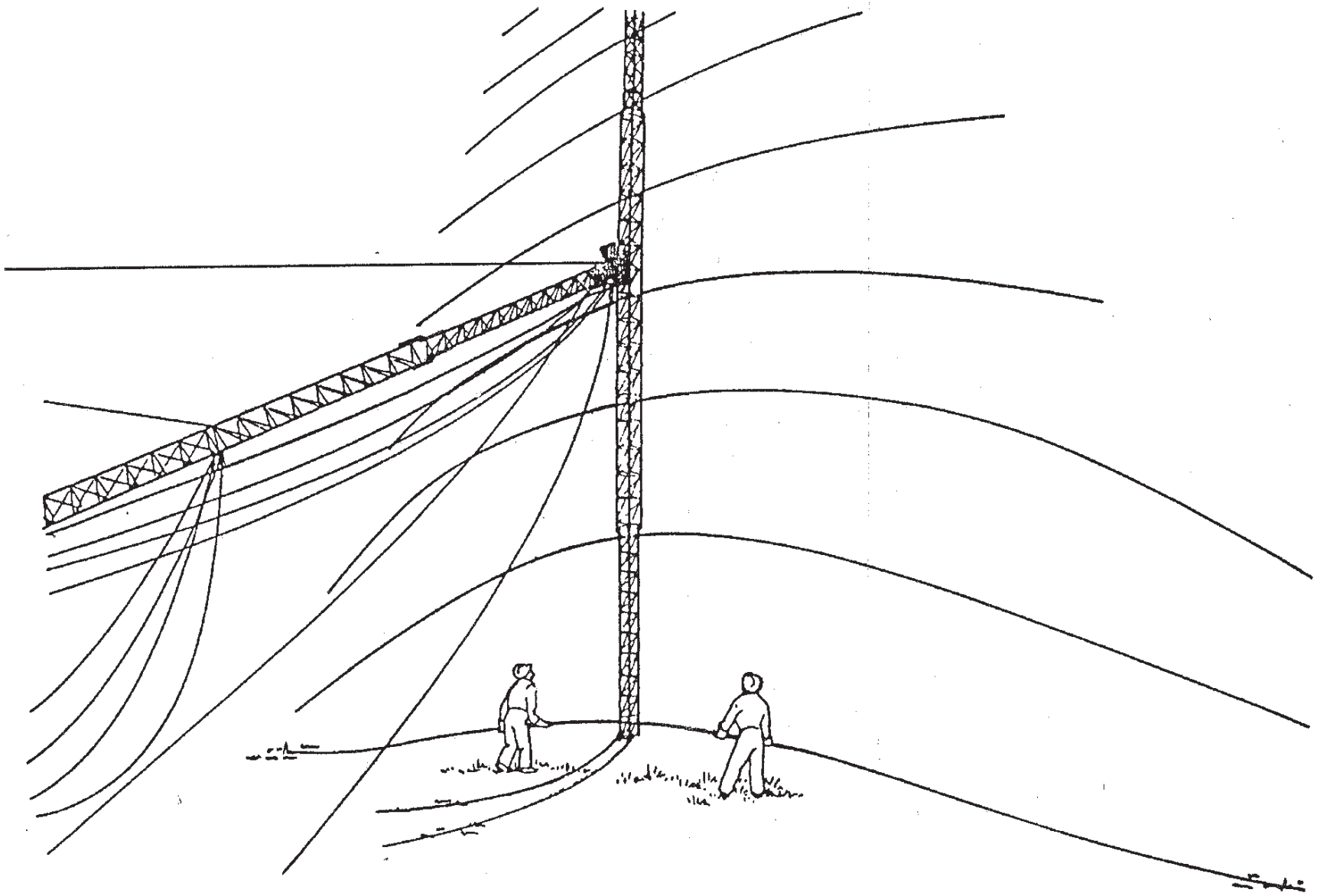

Figure 2-55
Preparing to Latch Antenna to Tower

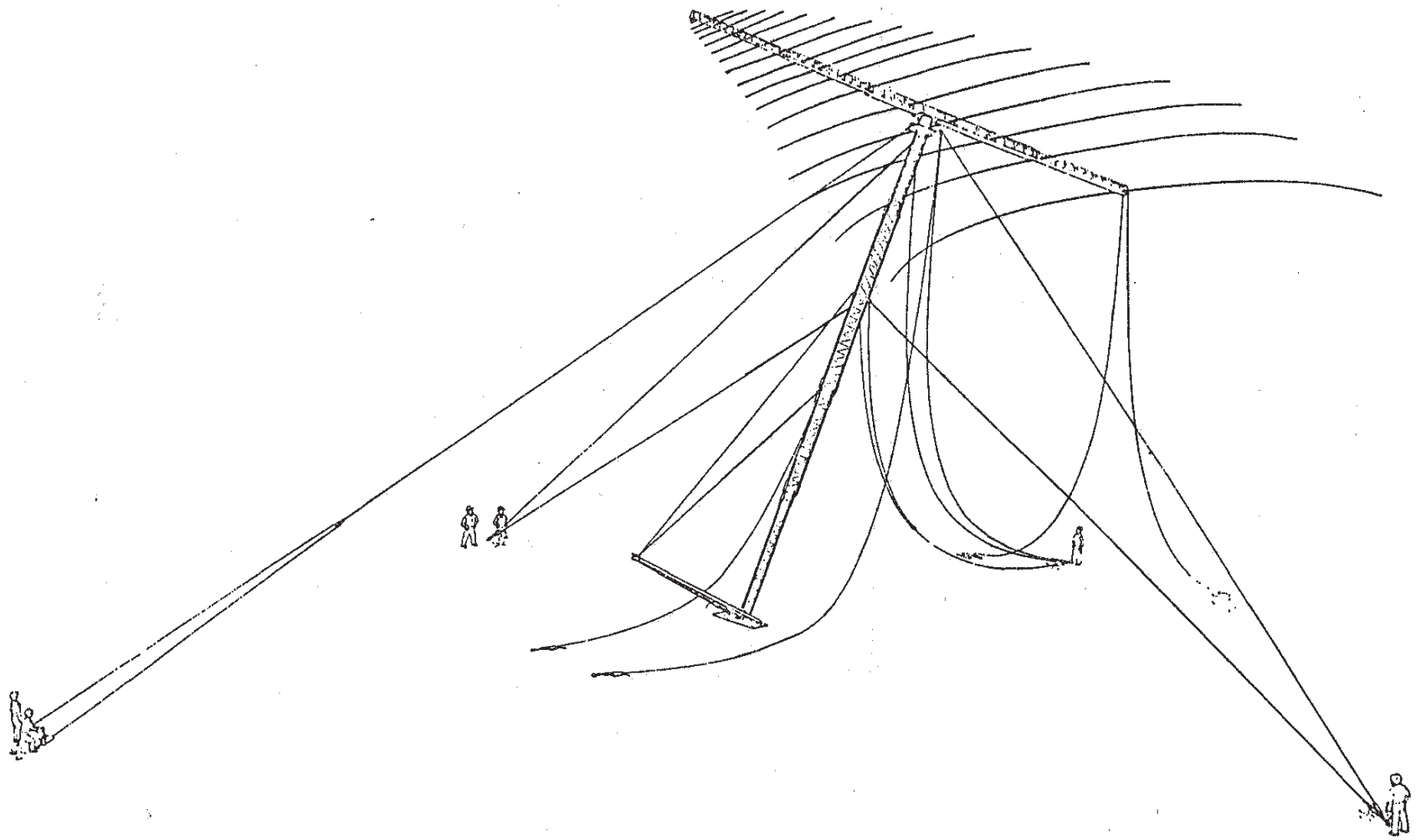

Figure 2-56
Raising of Antenna System

Section IV. PRELIMINARY ADJUSTMENT OF EQUIPMENT

2-16. Initial Checkout and Adjustment.

This system is shipped complete. The only checkout or adjustment will be a visual check of proper tension on all guys and the coaxial cable, to be sure it has not been pinched or damaged. Checkout of this system will depend on the actual transceiver equipment in use. Refer to the TM publication of the transceiver for check out procedure.

2-17. Operating the Rotator.

a. This paragraph covers the operational procedures for the manually operated rotator for setting the antenna to the desired direction of propagation.

b. The rotator is a manually operated locking device which allows the operator to release the lock position of the antenna in any of 12 positions of azimuth.

c. One man can release the brake mechanism as shown in Figure 2-48 by placing the rotator release lever under the horizontal brace in the tower section so that the brace fits the notched portion of the rotator release lever. Grasp the lever and push up on the unnotched end of the lever. (This in turn puts tension on the rotator release rope.) Maintain tension on the rotator release rope until the desired azimuth is reached.

NOTE: If the lever doesn't allow force to be placed on the rotator stop rope, readjust the attachment point to the lever by adjusting the rope clips on the rotator stop rope.

d. Two men should rotate the antenna by pulling on the tag lines attached to the rear of the boom. The rotator is equipped with azimuth settings located 30° apart. The antenna can be rotated to, and locked in, any of these 12 azimuth directions.

e. The rotator has a factory adjusted drag mechanism to limit rotational speed. The rotator is equipped with a stop to limit rotation to $\pm 180^{\circ}$. This is to insure that the coax cable is not damaged as a result of continued rotation in one direction. The operator should take care not to try to force the antenna to rotate past the stop. The antenna should always be rotated slowly so as not to damage this stop or the rotator locking pin (azimuth control pin).

f. Pull down on the rotator stop rope and move the antenna boom slowly to the desired direction. Release the rotator stop rope to allow the locking pin to engage. Secure the rotator stop rope back to the base of the tower, out of the way.

g. Snugly tie off the tag lines to the nearest anchors to insure minimum side sway of the antenna boom while in the erected position. These tag lines are of braided polyethylene and are elastic. When securing the tag lines to the guy anchor or other nearby objects, these elastic lines will absorb a large amount of the force the wind may cause on the antenna rather than allow all of this force to be imposed on the rotational stop pin in the rotator.

CHAPTER 3

OPERATING INSTRUCTIONS

Section I. OPERATION UNDER USUAL CONDITIONS

3-1. Controls and Indicators

This system has no controls or indicators other than the rotating of the antenna boom to its desired azimuth, as explained in paragraph 2-17. Refer to the operation chapter of the appropriate TM publication for operation procedures of the transceiver being used with Antenna System 1112MR.

3-2. Normal Operation

This system is complete and only needs to be connected to a transceiver that operates in the 4 to 30 MHz range. Refer to the operation chapter of the appropriate TM publication for operation procedures of the transceiver being used with Antenna System 1112MR.

CAUTION

Antenna System 1112MR is designed to operate in the 4 to 30 MHz range and should be used and operated in that frequency range only. The antenna should not be used for operation in any other region, for example 30 to 76 MHz range. Most transceivers operating in the 4 to 30 MHz range are capable of operating as low as 2 MHz. DO NOT allow the antenna to be used below 4 MHz. Severe damage to the antenna may result if this is allowed to occur.

Section II. OPERATION UNDER EMERGENCY OR UNUSUAL CONDITIONS

3-3. Operation Under Emergency Conditions.

When the antenna is to be operated under emergency conditions, such as severe thunderstorms or other similar atmospheric disturbances, DO NOT allow any personnel to walk or stand near the antenna, as this may cause serious injury or death.

3-4. Operation Under Unusual Conditions

This antenna system may be operated in areas of extreme cold or heat, high humidity, sand, snow, mud, saltwater areas, high altitudes, or other conditions not normally encountered. Note that field modifications must be made to properly secure the antenna guy anchors and the base plate anchors. Concrete anchor encasements may be required in sandy or muddy areas (Figure 2-9). Refer to Table 2-4 for the chart listing soil conditions and the type of anchor required.

Section III. PREPARATIONS FOR MOVEMENT

3-5. Movement to a New Site.

a. Rotate and lock the antenna boom so that the small element end is pointing in the same direction as the front guy anchor (para. 2-17).

b. Make sure the gin pole is correctly and completely assembled on the base plate (para. 2-10).

c. Untie the pulling cable from the tower and attach the pulley block and griphoist, with cable, following instructions given in Paragraph 2-11 and Figure 2-30.

NOTE: Make certain the griphoist is kept clean and well lubricated. The cable should be free from dirt and debris before being used with the griphoist. Refer to lubrication instructions of the griphoist for proper maintenance.

d. One man will apply tension on the pulling cable with the griphoist.

e. Remove the upper and lower front guys from the front guy anchor.

f. Route both the knee cable and the mid-tower front guy over the gin pole top plate rollers and attach the turnbuckles at the base plate. As the tower is lowered, us the turnbuckles to adjust the positions of the gin pole and insure proper engagement of the pulling cable into the gin pole top plate.

g. Position one man at the tower base plate.

h. Position two men at each side of the guy anchor to control the tension on each of the side guys. This will keep the system from swaying or shifting off center while being lowered. These same two men should control the boom position by use of the tag lines.

CAUTION: The side guy lines are still used to secure the system. When adjusting the side guys for proper tension, do not remove the turnbuckles from the anchors. These side guys must remain attached to their anchors during the entire lowering procedure. To adjust tention on the side guys increase or decrease the length of the turnbuckle. Do not decrease the tension on these side guys by disconnecting them from their anchors.

i. One man unpins the third tower leg from the base plate. The griphoist operator may need to increase or decrease tension on the griphoist to allow easy removal of the pin in the thrid tower leg.

j. One man carefully puts slight tension on teh back guys to pull the system off dead center, with two other mentadjusting the side guys.

k. The griphoist operator lowers the system using slow, even strokes to prevent the tower from bouncing, which will occur if the tower is lowered too fast.

l. The tower must be kept in line and straight during the entire lowering procedure. Give constant attention to the tower at all times. Make adjustments to the side guys as necessary. The side guys (upper and lower) should not be tight during lowering. Only apply enough tension to remove excessive sag from teh guys. The side guys must be used to keep the tower in line with the back guy anchor when viewed from the front guy anchor. The man in charge must constantly keep an eye on this alignment and instruct the men at the side guy anchor to make appropriate adjustments to the side guys. It is also most important that the man in charge watch the tower for any bowing or bending toward either side and instruct the men at the side guys to adjust as required to remove the slightest side bow or bend from the tower during the entire lowering procedure. These adjustments must be made without applying excessive tension to the side guys. Normally an instruction from the man in charge to tighten a guy on the side of the tower should be preceded by an instruction to reduce the tension in the corresponding guy on the opposite side of the tower. Failure to follow this procedure may cause serious damage or failure to the system.

m. The man in charge directs the adjustments on these two side guys to keep the system in line with the front and back guy anchors.

n. Give constant attention to the position of the antenna boom. It must not be allowed to sway or shift off-center with the tower. The rotator and gin pole must be kept in alignment with the front and back guy anchors.

o. The men at the side guys will adjust their respective side guys to keep the tower in line during the entire lowering procedure.

p. As the sysyem is lowered, the knee cables will lift the top of the gin pole off the ground.

q. During these initial stages of lowering the system, make any adjustments to the side guys in order to keep the system in line with the front and back guy anchors.

r. The griphoist operator continues to slowly operate the griphoist to lower the system. After the system reaches approximately 35° to 40° from horizontal, the gin pole will make contact with the pulling cable. The rope clips on the pulling cable must fit in the tower side of the gin pole top plate assembly (Figure 2-16).

s. After the pulling cable is properly seated in the gin pole top plate slot, remove any sag from the center of the tower by adjusting the knee cable and the mid-tower guy turnbuckle at the tower base plate. Continue to lower the system, watching the tower for straightness. Make adjustments as required, using the side guy cables and the knee cable.

t. The man in charge keeps constant watch on the side guys, not allowing the system to move off center between the front and back guy anchors. He shall also direct the men to make any adjustments in the guys so the system will not move off center.

u. Lower the system slowly until the large element end of the boom is about four feet off the ground.

Section II. PREVENTIVE MAINTENANCE CHECKS AND SERVICES

4-3. General

To be sure that Antenna System 1112MR is always ready for operation, it must be inspected systematically so that defects may be discovered and corrected before they result in serious damage or failure. The necessary preventive maintenance checks and services to be performed by the operator or crew are listed and described in Table 4-1. The item numbers indicate the sequence of minimum inspection requirements. Defects discovered during operation of the unit will be noted for future correction, to be made as soon as operation has ceased. Stop operation immediately if a deficiency which would damage the equipment is noted during operation. Record all deficiencies, along with the corrective action taken, on equipment forms and records.

4-4 Maintenance

Antenna System 1112MR will be lowered weekly by maintenance teams and checked by organizational maintenance personnel. The required checks are identified as preventive maintenance checks in Table 4-1

NOTE: If the equipment must be kept in continuous operation, check and service only those items that can be checked and serviced without disturbing operation; make the complete checks and services when the equipment can be shut down.

Item No.	Item to be Inspected	Procedure
1	Base Plate	Visual inspect for secure mounting
2	Tower Assemblies	Visual inspect for secure attachment of hardware. Inspect welds, for cracks or failure.
3	Captivated Hardware	Visual inspect for broken captivated leads.
4	Tower guy wire assembly and turnbuckles	Inspect for proper alignment and tensioning of turnbuckles
5	Guy Anchors	Visual inspect for secure mounting
6	Rotator	Lubricate and inspect, making sure it is in good operating condition.
7	Boom assemblies	Visual inspect all sections to make sure all attaching hardware is tightened securely.

CHAPTER 4

OPERATOR/CREW MAINTENANCE INSTRUCTIONS

WARNING

During assembly, erection, disassembly, removal, or repair of the tower, follow all normal safety requirements. Injury or DEATH could result from failure to comply with safe practices.

Section I. INSTRUCTION, TOOLS AND LUBRICATION

4-1. Operator/Crew Maintenance Instruction.

The operator maintenance consists of inspection of welds and tightening of the coaxial feedline connections. Tighten the connections if required and apply a coating of weatherproofing if the connection has been loosened. Replace the coax if the outer insulator has been damaged in any way.

4-2. Lubrication.

All servicing and lubrication shall be performed by organizational maintenance personnel. Refer to paragraphs 5-4 and 5-5 for lubrication instructions.

Section II. PREVENTIVE MAINTENANCE CHECKS AND SERVICES

4-3. General

To be sure that Antenna System 1112MR is always ready for operation, it must be inspected systematically so that defects may be discovered and corrected before they result in serious damage or failure. The necessary preventive maintenance checks and services to be performed by the operator or crew are listed and described in Table 4-1. The item numbers indicate the sequence of minimum inspection requirements. Defects discovered during operation of the unit will be noted for future correction, to be made as soon as operation has ceased. Stop operation immediately if a deficiency which would damage the equipment is noted during operation. Record all deficiencies, along with the corrective action taken, on equipment forms and records.

4-4 Maintenance

Antenna System 1112MR will be lowered weekly by maintenance teams and checked by organizational maintenance personnel. The required checks are identified as preventive maintenance checks in Table 4-1

NOTE: If the equipment must be kept in continuous operation, check and service only those items that can be checked and serviced without disturbing operation; make the complete checks and services when the equipment can be shut down.

Item No.	Item to be Inspected	Procedure
1	Base Plate	Visual inspect for secure mounting
2	Tower Assemblies	Visual inspect for secure attachment of hardware. Inspect welds, for cracks or failure.
3	Captivated Hardware	Visual inspect for broken captivated leads.
4	Tower guy wire assembly and turnbuckles	Inspect for proper alignment and tensioning of turnbuckles
5	Guy Anchors	Visual inspect for secure mounting
6	Rotator	Lubricate and inspect, making sure it is in good operating condition.
7	Boom assemblies	Visual inspect all sections to make sure all attaching hardware is tightened securely.

Item No.	Item to be Inspected	Procedure
8	Feedline	Inspect to make certain feedline is tensioned properly and connected securely at its proper terminals.
9	Element Center Insulator Assembly	Visual check to see that the red bands are all on one side of the boom.
10	Griphoist and pulling cable	Lubricate and make certain it is in good working order. Check for broken or worn cable strands.
11	RF Cable	Inspect the rf cable for broken connections or cut or broken covering. Repair if necessary.
12	Connecting Hardware	Lower the system and check all bolts and attaching hardware to make certain they are tight and in place.

Table 4-1. Preventive Maintenance Checks and Services

Section III. TROUBLESHOOTING

4-5. General.

a. This chapter contains information to aid the operator in finding trouble or malfunction of Antenna System 1112MR only. Refer to the appropriate TM to troubleshoot the transceiver being used with this antenna system.

b. Any trouble that is beyond the scope of operator/crew shall be referred to organizational maintenance.

4-6. Troubleshooting Chart.

Malfunction	Probable Cause	Corrective Action
Front base plate hinge pin will not engage.	Back tower guy or guys too short.	Adjust guy tension slightly as needed.
Element sections will not mate properly during assembly.	Foreign material in or on mating parts or joints. Mating parts deformed or scarred.	Inspect and clean mating parts. Action to be performed by organizational personnel.
Rotator hinge plate will not latch or difficult to latch	Latch mechanism fouled with dirt, etc.	Organizational maintenance personnel shall lower tower to ground; inspect and clean parts.
	Latch rope tangled	Organizational maintenance personnel shall lower tower, free rope.
	Antenna boom not properly positioned on hinge plate.	Inspect for proper location as indicated in manual; reposition boom on hinge plate to insure proper balance.
Rotator locking pin will not engage or disengage.	Locking pin rope tangled	Untangle
	Accumulation or dirt etc. on pin or in pin hole.	Organizational maintenance personnel shall lower antenna, clean and inspect for wear, lubricate.

Malfunction	Probable Cause	Corrective Action
Antenna will not rotate	Accumulation of dirt etc. in rotator	Organizational maintenance personnel shall lower antenna, clean, inspect and lubricate
	Insufficient loop in coaxial cable between tower and antenna boom	Sufficient loop must be left in coax. To allow antenna to rotate 180° without binding. Readjust coax and inspect for damage
Loss of electrical performance	Broken or damaged coax	Check entire length of coax and all connections (also see above). Check all feedline connections at balun and at element feedline connection points. Secure all connections.

Table 4-2. Troubleshooting Chart

CHAPTER 5

ORGANIZATIONAL, DIRECT SUPPORT AND GENERAL SUPPORT MAINTENANCE INSTRUCTIONS

Section I. TOOLS, MAINTENANCE AND REPAINTING INSTRUCTIONS

5-1. Tools and Equipment.

The tools and equipment used to maintain Antenna System 1112MR are listed in Table 2-3. No special tools are required for maintaining the system.

5-2. Maintenance Instructions.

Maintenance performed by organizational personnel shall follow the requirements listed in the maintenance allocation chart.

5-3. Repainting and Refinishing Instructions.

The system is chemically treated to prevent atmospheric and weather corrosion. Repainting or refinishing any part, or assembly of the system is not required.

Section II. LUBRICATION INSTRUCTIONS

5-4. Servicing and Lubrication of the Antenna System.

a. Before operation, organizational maintenance personnel must be certain the coaxial cable is clean and free from excessive mositure. The coaxial connector should be cleaned of any dirt or debris.

b. The system should be checked monthly, and all moving parts, such as the rotator, should be lubricated with a light weight motor oil to prevent atmospheric deterioration.

5-5. Lubrication of the Griphoist.

a. Lubricate generously with SA-30 motor oil, using a brush. Make sure that the lubricant penetrates well into the mechanism. Take special care to thoroughly lubricate the jaw lugs, spring shafts and slotted plates. To allow the lubricant to penetrate to the jaw lugs, alternately pull and release the clutch actuating lever.

b. Repeat lubrication as described above each time the machine is to be used; repeat also during drawn-out operations. Excess lubrication will not cause the wire rope to slip. Lack of lubrication is the greatest cause of malfunction, causing wear or jamming of the bearings.

Section III. PREVENTIVE MAINTENANCE CHECKS AND SERVICES

5-6. General.

To insure that Antenna System 1112MR is always ready for operation, it must be inspected systematically so that defects may be discovered and corrected before they result in seious damage or failure. The necessary preventive maintenance checks and services to be performed by organizational maintenance personnel are listed and described in Table 4-1. The item numbers indicate the sequence of minimum inspection requirements. Defects discovered during the operation of the unit will be noted for future correction, which will be made as soon as operation has ceased. Stop operation immediately if a deficiency which would damage the equipment is noted during operation. Record all deficiencies, along with the corrective action taken, on equipment forms and records.

5-7. Responsibilities.

Antenna System 1112MR will be lowered weekly and checked by organizational maintenance personnel. Instructions for performing the required checks are identified as preventive maintenance checks in Table 4-1.

Section IV. TROUBLESHOOTING AND REPAIR

5-8 General.

a. This chapter contains information to aid the organizational maintenance personnel in finding trouble or malfunction of Antenna System 1112MR only. Refer to the appropriate TM to trouble shoot the transceiver being used with this antenna system.

b. The system is relatively simple, therefore all problems should be able to be corrected by organizational maintenance personnel.

5-9 Troubleshooting Chart.

Table 5-1. Troubleshooting Chart for Organizational Maintenance Personnel.

Malfunction	Probable Cause	Corrective Action
Front baseplate hinge pin will not engage.	Back tower guy or guys too short.	Adjust guy tension slightly as needed.
Tower or boom sections will not mate during assembly.	Mating parts have accumulation of grit or foreign material on them.	Clean mating parts.
	Sections sprung or bent out of alignment during handling or shipping.	Minimum straightening permitted - replace parts or sections as required.
Element sections will not mate properly during assembly.	Foreign material in or on mating parts of joint.	Inspect and clean mating parts.
	Mating parts deformed or scarred.	Dress mating parts with file or emery cloth as required. If parts are deformed enough to cause weakening, replace parts as required.
Rotator hinge plate will not latch or is difficult to latch.	Latch mechanism fouled with dirt, etc.	Lower tower to ground, inspect and clean parts.
	Latch rope tangled.	Lower tower and free rope.
	Antenna boom not properly positioned on hinge plate.	Inspect for proper location as indicated in manual, reposition boom on hinge plate to insure proper balanc

Table 5-1. Troubleshooting Chart for Organizational Maintenance Personnel - continued.

Malfunction	Probable Cause	Corrective Action
Rotator locking pin will not engage or disengage.	Locking pin rope tangles. Accumulation of dirt, etc. on pin or in pin hole.	Untangle. Lower antenna, clean and inspect for water, lubricate.
Antenna will not rotate.	Accumulation of dirt, etc. in rotator assembly.	Lower antenna, clean, inspect, and lubricate.
	Insufficient loop in coaxial cable between tower and antenna boom	Sufficient loop must be left in coax. To allow antenna to rotate 180° without binding. Readjust coax and inspect for damage.
Loss of electrical performance	Broken or damaged coax.	Check entire length of coax and all connections (also see above).
		Check all feedline connectionc as balun and at element feedline connection points. Secure all connections, repair or replace parts as required.
Antenna tower not plumb during erection or while lowering.	Side guys improperly adjusted.	Readjust side guys. On uneven site it may be necessary to station a man at each side guy anchor to constantly adjust side guys while antenna is being raised or lowered.

5-10. Maintenance of Assemblies or Parts.

All assemblies, subassemblies, and parts in Antenna System 1112MR are replaceable. All maintenance on these items shall be directed to replacement only.

CHAPTER 6

FUNCTIONING OF EQUIPMENT

6-1. Electrical and Electronic Theory.

a. This antenna system is planar array of dipoles assembled in accordance with logarithmically periodic antenna design and principles. Refer to Figure 6-1 for a schematic of the antenna. This design provides an antenna whose characteristics remain constant over a 4 to 30 MHz band. The parameters of the antenna are defined only by angles and ratios. The operating frequency of the antenna is limited only by its structural characteristics. The successive dipoles are connected alternately to opposite sides of a transmission line, called the feeder, to produce the required element phasing. Radio frequency energy, at a given frequency, travels along the feeder until it reaches a section of the structure where the electrical length of the elements and the phase relationships are such as to produce radiation. The resulting beam from this "active region" is directed toward the end of the shortest elements, so the beam always shoots through elements which are shorter than one-half wavelength at the operating frequency. These small, closely spaced elements are oppositely connected so that the field produced by currents in adjacent elements ahead of the active region tend to cancel.

b. The electrical operating characteristics of the antenna system may be predicted from design factors TAU and ALPHA. To provide optimum performance consistent with acceptable size, a TAU (relative spacing) factor of 0.85 and ALPHA angle of 30° were chosen. These factors will theoretically provide a gain of 8 dB over an isotropic source, as measured in free space.

c. Gain figures as outlined in the electrical specifications of this antenna have been proven both on scale models and on the full size antenna.

6-2. Mechanical Theory.

The theory of this system's mechanics are relatively elementary. This antenna is designed to allow field personnel to quickly and easily move the system from one location to another.

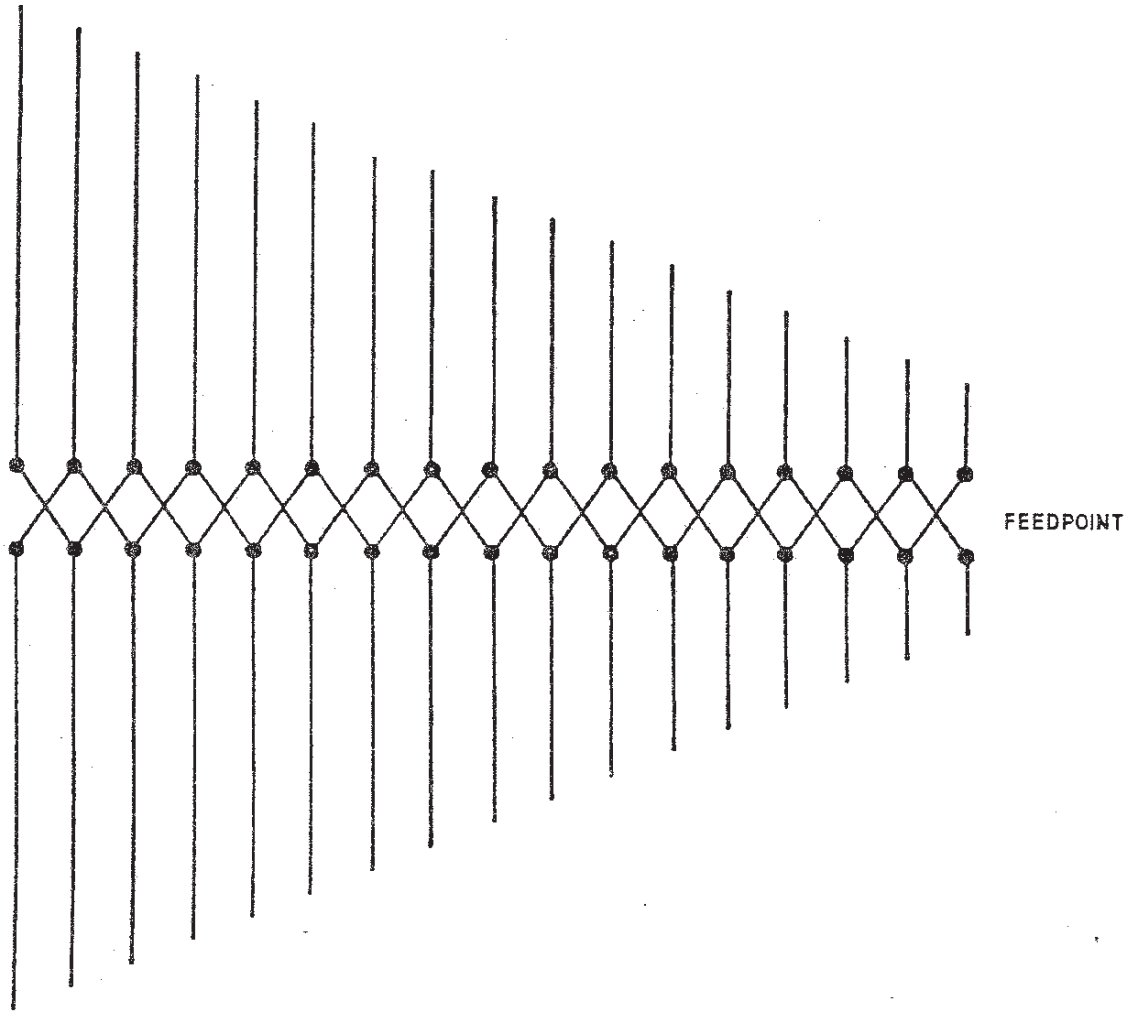

Figure 6-1
Schematic Diagram of Antenna System

FAX FAX FAX FAX FAX FAX FAX FAX FAX FAX

BYTOWN MARINE LIMITED

5 Corvus Court
Nepean, Ontario
Canada K2E 7Z4

Tel (613) 723-8424 FAX (613) 723-0212

Date: 6/3/99 **FAX No:** 4758 **Pages:** 2

To: National Defence HQ

Attn: MWO Cam Hardy DECSS

Fax Phone: 613-993-2681

From: Tony J. Mason

Subject: LP1112MR

In response to your question regarding the interchangeability of boom sections with antenna sections on the LP1112MR I have attached a copy of the reply received from Telex Communications, the manufacturer of the antenna.

If you need any further information please call me.

Regards

Tony Mason

Tony J. Mason

FAX

Telex Communications, Inc
8601 East Cornhusker Highway
Lincoln, NE 68505
Telephone 402 467 5321
FAX 402 467 3279

Wednesday, June 02, 1999

From: Karon Harris

To: Bytown

Attn: Tony Mason

Subject: LP1112MR

Reference: Your fax 4750

I have spoken with our technical engineer.

We cannot recommend that any of these sections tower to boom, boom to tower be interchanged.

Tower sections should not be used as boom sections as their additional weight would place additional stress on adjoining sections.

Boom sections cannot be used as tower sections as they are not constructed to withstand the forces that are placed on the tower.

These two reasons could make the system unsafe.

Tower sections are not marked with element locations or rotator location.

Connection of the tower legs and the boom legs are slightly different.

Should you have any questions, please call.

Regards
Karon
Karon

CHAPTER 7

OPERATION OF EQUIPMENT USED IN CONJUNCTION WITH THE MAJOR ITEM

7-1. General.

a. This system is complete and only needs to be connected to a transceiver that operates in the 4 to 30 MHz range.

b. Refer to the operation chapter of the appropriate TM publication for operation procedures of the transceiver being used with Antenna System 1112MR.

CAUTION: Antenna System 1112MR is designed to operate in the 4 to 30 MHz range and should only be used and operated in that particular frequency range. The antenna should not be used for operation in any other region, for example, the 30-76 MHz range. Most transceivers which operate in the 4 to 30 MHz range are capable of operating as low as 2 MHz. DO NOT allow the antenna to be used below 4 MHz. Severe damage may result if this is allowed to occur.

CHAPTER 8

PARTS LIST

26 T Bolt

8-1. General.

This chapter contains a complete parts list for the Model 1112MR. The information may be used for identification of parts when unpacking the equipment and for ordering replacement parts.

The parts list is divided into four columns - the first is item numbers used in illustrations, the second is manufacturer's part number, the third is the description, and the fourth is the quantity. Quantities specified in the Quantity column are the total number of each part within the complete system and are not necessarily the total number with an assembly or subassembly.

Item No.	Part No.	Description	Qty
1	870461	Upper nesting tower section assembly	1
2	880028	Upper #1 tower section assembly	1
3	875949	T-handle bolt assembly	3
4	880023	Upper #2 tower section assembly	1
5	870462	Lower nesting tower section assembly	1
6	880014	Lower #1 tower section assembly	1
7	880015	Lower #2 tower section assembly	1
3	875949	T-handle bolt assembly	3
8	880018	Lower #3 tower section assembly	1
9	870463	Front nesting boom section assembly	1
10	880024	Front #1 boom section assembly	1
12	880016	Front #2 boom section assembly	1
11	870471	T-bolt assembly	3
13	880017	Front #3 boom section assembly	1
14	870473	Rear nesting boom section assembly	1
15	880026	Rear #1 boom section assembly	1
11	870471	T-bolt assembly	3
16	880025	Rear #2 boom section assembly	1
17	870464	Boom splicing pin assembly	3
18	880027	Boom ext. assembly w/feedline	1
19	877365	Balun final assembly	1
20	870466	Rotator Assembly	1
21	870490	Hinge plate rope assembly	1
22	870491	Rotator rope assembly	1
23	870470	Tag line assembly	2
24	880019	Base plate assembly	1
25	380155	Tower insert C	1
26	380156	Tower insert B	1
27	380157	Tower insert A	1
28	870469	Detent Pin assembly, 1/2"	5
29	880021	Base plate anchor	4
30	180173	Concrete Plate	4
31	870711	Bolt Assembly	4
32	880020	Lower gin pole assembly	2
33	180279	Upper gin pole	2
34	880022	Gin pole top plate assembly	1
35	380163	Screw anchor, 6" x 48"	6
36	870162	Elephant stake anchor	6
37	879995	Lower guy assembly w/turnbuckle	1
38		(Not Used)	

Item No.	Part No.	Description	Qty
118	879996	Knee brace cable w/turnbuckle	1
39	879997	Lower front guy assmbly w/turnbuckle	1
40	880393	Upper guy assembly w/turnbuckle	2
41	350874	Grip hoist with 165 ft. cable	1
42	350557	Tackle block	1
43	870467	Pulling cable assembly	1
113	356589	Thimble, 1/2"	2
114	351997	Wire rope clip, 1/2"	6
115	380317	Wire rope clip, 1/2" modified	2
116	631328	Cable, 1/2"	1
117	350559	Eye hook w/safety catch	1
44	874712	Center insulator assembly #1	1 NS
45	874710	Center insulator assembly #2	1
46	874711	Center insulator assembly #3	1
47	874729	Center insulator assembly #4	1
48	875950	Center insulator assembly #5	1
49	875953	Center insulator assembly #6	1
50	875757	Center insulator assembly #7	1
51	875755	Center insulator assembly #8	1 MS
52	875951	Center insulator assembly #9	1
53	870432	Center insulator assembly #10	1
54	870433	Center insulator assembly #11	1
55	870434	Center insulator assembly #12	1
56	870435	Center insulator assembly #13	1
57	870436	Center insulator assembly #14	1
58	870437	Center insulator assembly #15	1
59	870492	Center insulator assembly #16	1
60	870493	Center insulator assembly #17	1
61	870499	Element tube assembly #2-2	2
62	870438	Element tube assembly #3-2	2
63	870439	Element tube assembly #4-2	2
64	870440	Element tube assembly #5-2	2
65	870441	Element tube assembly #6-2	2
66	870443	Element tube assembly #7-2	2
67	870444	Element tube assembly #8-2	2
68	870447	Element tube assembly #9-2	2
69	870448	Element tube assembly #9-3	2
70	870449	Element tube assembly #10-2	2
71	870451	Element tube assembly #10-3	2
72	870456	Element tube assembly #11-2	2
73	870457	Element tube assembly #11-3	2
74	870496	Element tube assembly #12-2	2
75	870497	Element tube assembly #12-3	2
76	870498	Element tube assembly #12-4	2
77	870442	Element tube assembly #13-2	2
78	870445	Element tube assembly #13-3	2
79	870446	Element tube assembly #13-4	2
80	870450	Element tube assembly #14-2	2
81	870452	Element tube assembly #14-3	2
82	870453	Element tube assembly #14-4	2
83	870458	Element tube assembly #15-2	2
84	870459	Element tube assembly #15-3	2
85	870460	Element tube assembly #15-4	2
86	870500	Elememt tube assembly #15-5	2
87	870455	Element tube assembly #16-2 & 17-2	4
88	870495	Element tube assembly #16-3 & 17-3	4
89	870454	Element tube assembly #16-4 & 17-4	4

Item No.	Part No.	Description	Qty
90	870602	Element tube assembly #16-5 & 17-5	4
91 thru 93		(Not Used)	
94	870489	Crate assembly	4
95	870640	Small element box, without contents	1
96	870639	Large element box, without contents	1
97	870642	Small accessory box, without contents	1
98	870641	Large accessory box, without contents	1
99	880049	Gin pole bracket (swivel)	1
100	870474	Gin pole bracket pin	1
101	880050	Gin pole bracket	1
102	350571	Wrench, 9/16" open end	2
103		(Not Used)	
104	350573	Wrench, 1 1/8" open end	2
105	350574	Screwdriver, 6" x 1/4"	2
106	352674	Hammer, 8 lb sledge	1
107	370794	Anchor driving bar	1
108	350592	Nut driver, 7/16"	3
109	870712	Boom saddle block	6
110	380267	Tower joint stiffeners, 1/4" x 3" x 30"	9
111	540021	U-bolts (stiffener attachment) w/nuts	36
112	561016	Lockwasher, split	72
119 thru 131		(Not Used)	
132	690320	5/32" Polyethelene rope, 40'	1
133 thru 138		(Not Used)	
139	880378	Spark gap assembly, short	1
140	880377	Spark gap assembly, long	1
141 thru 147		(Not Used)	
148	350586	5/16" detent pin	6
149	530004	Thumb screw, 1/4"-20 x 1", ss	34
150	180484	Rotator release lever	1