GENERAL NOTES

1. READ THE STRUCTURAL DRAWINGS IN CONJUNCTION WITH ALL OTHER PERTINENT CONTRACT DOCUMENTS.
2. ALL DIMENSIONS ARE IN MILLIMETERS UNLESS NOTED OTHERWISE. THE CONTRACTOR SHALL VERIFY DIMENSIONS BEFORE BEGINNING CONSTRUCTION AND REPORT DISCREPANCIES TO THE ENGINEER BEFORE PROCEEDING WITH THE WORK. DO NOT SCALE DRAWINGS.
3. THE DESIGN AND CONSTRUCTION SHALL BE IN ACCORDANCE WITH THE NATIONAL BUILDING CODE OF CANADA 2010, ITS SUPPLEMENTS AND THE LATEST EDITIONS OF REFERENCED CODES AND STANDARDS THEREIN, UNLES NOTED OTHERWISE.
4. COORDINATE WITH THE PRE-FABRICATED BUILDING DRAWINGS FOR LOCATIONS AND DIMENSIONS OF OPENINGS, SLEEVES AND OTHER BUILDING COMPONENTS NOT SHOWN ON THE STRUCTURAL DRAWINGS. REPORT DISCREPANCIES TO THE ENGINEER BEFORE PROCEEDING WITH CONSTRUCTION.
5. CONTRACTOR TO CONFIRM DIMENSIONS, WEIGHTS AND ALL OTHER CRITICAL DETAILS PRIOR TO CONSTRUCTION. REPORT DISCREPANCIES TO THE ENGINEER AND OBTAIN AUTHORIZATION IN WRITING PRIOR TO PROCEEDING WITH CONSTRUCTION.
6. DRAWINGS SHOW COMPLETED STRUCTURE ONLY. PROVIDE TEMPORARY BRACING FOR CONSTRUCTION LOADING CONDITIONS AND STABILITY OF THE STRUCTURE DURING CONSTRUCTION. CONSTRUCTION LOADS SHALL NOT EXCEED THE DESIGN LOADS.
7. VERIFY LOCATION OF ALL UNDERGROUND SERVICES PRIOR TO COMMENCING CONSTRUCTION AND BE RESPONSIBLE FOR DISRUPTIONS.
8. ALL WORK SHALL CONFORM TO ALL APPLICABLE LOCAL BYLAWS AND CODES.
9. ALL REFERENCED CODES SHALL BE THE LATEST EDITIONS.
9. BUILDING CONTROL LINES, REFERENCE LINES, GRID LINES, AND TEMPORARY BENCH MARKS TO BE CLEARLY IDENTIFIED AND MAINTAINED DURING THE ENTIRE CONSTRUCTION.

DESIGN LOADS:

FOLLOWING LOADS ARE SERVICE LOADS

1. DEAD LOADS: PRE-FABRICATED BUILDING WEIGHTS ASSUMED 275 kN
2. LIVE LOADS:
   - .1) GROUND SNOW LOAD - Ss = 1.9 kPa; Sr = 0.2 kPa
   - .2) WIND LOAD - q(1/50) 0.40 kPa
   - .3) BUILDING FLOOR - WORKSHOP 5 kPa; 9 kN POINT LOAD; BOATHOUSE 12 kPa; 54 kN POINT LOAD

FOUNDATION NOTES

1. DESIGN BEARING CAPACITY: SHALLOW FOUNDATION AT 1M DEPTH: 224 kPa (UNFACTORED ULS); 80 kPa (SLS)
2. BEARING SURFACES FOR SLABS SHALL BE REVIEWED AND ACCEPTED BY THE GEOTECHNICAL ENGINEER PRIOR TO CASTING OF CONCRETE. PROTECT BEARING SURFACES. DO NOT PLACE CONCRETE ON FROZEN SOIL.
3. PREVENT SUBGRADE FROM FREEZING AFTER CASTING FOUNDATION UNTIL CONSTRUCTION IS COMPLETE AND STRUCTURES ARE IN SERVICE.
4. DO NOT UNDERMINE EXISTING BUILDINGS.
5. REFER TO AECOM GEOTECHNICAL REPORT DATED SEPTEMBER 02, 2016.
6. CONTRACTOR TO RETAIN AND PAY FOR GEOTECHNICAL ENGINEER TO VERIFY SUBGRADE AND BASE MATERIAL BY PERFORMING COMPACTION TESTS. TWO TESTS PER EACH 200mm LIFT.

INSULATED CONCRETE FORM NOTES

1. LOGIX OR EQUIVALENT. INSTALL PER MANUFACTURERS RECOMMENDATIONS. ALL CORNERS TO BE BRACED TO PREVENT BLOWOUT PRIOR TO CASTING CONCRETE.
2. INSTALL ALL FORMS LEVEL, PLUM, AND SQUARE PRIOR TO CASTING CONCRETE.
3. KNOCK DOWN FORMS SYSTEMS TO BE USED.

CONCRETE NOTES

1. PROVIDE CONCRETE AND PERFORM WORK TO CAN/CSA A23.1. THE CONTRACTOR SHALL HAVE A COPY OF THIS STANDARD ON SITE AT ALL TIMES.
2. TEST CONCRETE IN ACCORDANCE WITH CAN/CSA A23.2.
3. CONCRETE REQUIREMENTS:

LOCATION	STRENGTH	EXPOSURE CLASS	MIX TYPE
FLOOR	32 MPa	C2	GU/GUb
WALL/FOOTING	32 MPa	S2	HS/HSb

4. HEATING AND HOARDING, WHEN REQUIRED, SHALL BE PROVIDED AT CONTRACTOR'S COST.
5. CONCRETE COVER;
   - WALL: 40mm
   - SLAB ON GRADE TOP: 80mm; BOTTOM: 50mm
6. FINISH SURFACE TO CSA A23.1, TABLE 22, CLASS A UTILIZING MAGNESIUM TROWELS FOR AIR ENTRAINED CONCRETE.
7. THE CONTRACTOR SHALL CONDUCT A PRE-INSTALLATION MEETING WITH MIX DESIGNER, THIRD PARTY TESTING AGENCY REPRESENTATIVE, CONCRETE INSTALLERS, CONCRETE FINISHERS, CONCRETE CURING APPLICATORS, REINFORCING STEEL INSTALLERS, FLOOR COATING APPLICATORS AND THE ENGINEER TO REVIEW THE FOLLOWING:
   - .1) GENERAL PROJECT REQUIREMENTS.
   - .2) CONTRACTOR'S QUALITY CONTROL PLAN FOR EACH CLASS OF CONCRETE.
   - .3) CONTRACTOR'S PROCEDURES PRIOR, DURING AND FOLLOWING CONCRETE CASTINGS.

CONCRETE REINFORCEMENT

1. DEFORMED BARS CONFORMING TO CAN/CSA-G30.18 GRADE 400.
2. REINFORCING WORK SHALL BE IN ACCORDANCE WITH CAN/CSA A23.1 AND CAN/CSA A23.3.
3. REINFORCING STEEL SHALL BE DETAILED IN ACCORDANCE WITH THE LATEST EDITION OF THE RSIC "REINFORCING STEEL MANUAL OF STANDARD PRACTICE".
4. DOWELS AND ANCHOR BOLTS SHALL BE SECURED IN POSITION BY MEANS OF TEMPLATES BEFORE CONCRETE IS CAST.
5. PROVIDE 900x900 BENT BARS AT CORNERS AND T-SECTIONS OF WALLS. SIZE TO MATCH WALL'S HORIZONTAL BAR SIZE. PROVIDE BENT BARS TO EACH HORIZONTAL BARS IN THE WALL.

STANDARD ABBREVIATIONS

ADDITIONAL	ADDL.	MATERIAL	MATL.
AT	@	MAXIMUM	MAX.
ANCHOR BOLT	A. BOLT	MECHANICAL	MECH.
ALTERNATE	ALTER.	MIDDLE	MID.
ALUMINUM	ALUM.	MIDDLE UPPER LAYER	MUL
APPROXIMATE	APPROX.	MIDDLE LOWER LAYER	MLL
ARCHITECTURAL	ARCH.	MINIMUM	MIN.
AVERAGE	AVG.	MISCELLANEOUS	MISC.
BOTTOM	BOT.	NUMBER	No.
BOTTOM LOWER LAYER	BLL	NOT TO SCALE	N.T.S.
BOTTOM UPPER LAYER	BUL	ON CENTER	o/c (lower case)
BETWEEN	BET.	OUTSIDE FACE	O.F.
BLOCK	BLK.	OUT TO OUT	O/O
BUILDING	BLDG.	OUTSIDE DIAMETER	O.D.
BENCH MARK	B.M.	OPENING	OPG.
BEAM	BM.	OPPOSITE	OPP.
BEARING	BRG.	ORIGINAL	ORIG.
BACK TO BACK	B/B	OPEN WEB STEEL JOIST	OWSJ
BY (between dims)	x (lower case)	PAINT	PT.
CENTERLINE	℄	PLATE	PL.
CAST IN PLACE	C.I.P.	PLYWOOD	PLYWD.
CONCRETE MASONRY UNIT	C.M.U.	PRELIMINARY	PRELIM.
CONSTRUCTION JOINT	C.J.	PRESSURE TREATED	P.T.
COMPLETE WITH	C/W	PROJECTION	PROJ.
COLUMN	COL.	REINFORCE WITH	R/W
CONCRETE	CONC.	REINFORCING	REINF.
CONTINUOUS	CONT.	REQUIRED	REQ.
DEAD LOAD	D.L.	REVISION	REQD
DOWN	DN.	SECTION	SECT.
DRAWING	DWG.	SHEET	SHT.
DOWEL	DWL.	SIMILAR	SIM.
EACH	EA.	SPECIFICATION	SPEC.
EACH FACE	E.F.	SPECIAL COATING	SP. COATG.
EXPANSION JOINT	EXP. J.	STAINLESS STEEL	S.S.
EACH WAY	E.W.	STANDARD	STD.
ELEVATION	EL.	STIFFENER	STIFF.
ELECTRICAL	ELEC.	STIRRUP	STIRR.
EQUAL	EQ.	STRUCTURAL	STRUCT.
EQUIPMENT	EQUIPT.	SYMMETRICAL	SYM.
EXISTING	EXIST.	THICK	THK.
EXPANSION	EXP.	TOP OF	T.O.
EXTERIOR	EXT.	TOP LOWER LAYER	TLL
FACE TO FACE	F. to F.	TOP UPPER LAYER	TUL
FACE OF CONCRETE	F.O.C.	TYPICAL	TYP.
FINISH	FIN.	UNLESS NOTED	UN
FIRE RATING	F.R.	VERTICAL	VERT.
FIBERGLASS REINFORCED PLASTIC	FRP.	WIND LOAD	W.L.
FOUNDATION	FDN.	WITH	W
FOOTING	FTG.		
GALVANIZE	GALV.		
HANGER	HGR.		
HOLLOW CORE	HC.		
HOLLOW STRUCTURAL STEEL	HSS		
HORIZONTAL	HORIZ.		
HEIGHT	HT.		
INSIDE FACE	I.F.		
INSIDE DIAMETER	I.D.		
INTERIOR	INT.		
KILO NEWTON	kN		
KNOCK-OUT BLOCK	K.O.		
LIVE LOAD	L.L.		

SHOP DRAWING SUBMISSIONS

1. CONCRETE MIX DESIGN AS PER CSA A23.1, SIGNED & SEALED BY MIX DESIGN PROFESSIONAL ENGINEER, REGISTERED IN THE PROVINCE OF MANITOBA.
2. INSULATED CONCRETE FORM (ICF) LAYOUT AND PRODUCT CUT SHEET.
3. CONCRETE REINFORCEMENT SHOP DRAWING.

AECOM

PROJECT

PRE-FABRICATED BUILDING FOUNDATION

GIMLI S&R STATION
95 FIRST STREET
GIMLI, MB

CLIENT

FISHERIES AND OCEANS CANADA

520 EXMOUTH STREET
SARNIA, ON N7T8B1
519.383.1813 tel 519.464.5128 fax
www.dfo.mpo.gc.ca

CONSULTANT

AECOM
99 Commerce Drive
Winnipeg, Manitoba R3P 0Y7
204.477.5381 tel 204.284.2040 fax
www.aecom.com

REGISTRATION

PROVINCE OF MANITOBA
M. M. HOQUE
MEMBER 36114
2016-11-04
REGISTERED PROFESSIONAL ENGINEER

APEGM
Certificate of Authorization
AECOM Canada Ltd.
No. 4671 Date: 2016-11-04

ISSUE/REVISION

NO.	DATE	DESCRIPTION
0	2016.11.04	ISSUED FOR TENDER

KEY PLAN

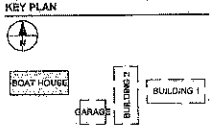

PROJECT NUMBER

60513310

SHEET TITLE

BOAT HOUSE BUILDING
FOUNDATION
GENERAL NOTES

SHEET NUMBER

SB100

Project Management Initials: Designed ____ Checked ____ Approved ____ ISO A1 594mm x 841mm
Last saved by: LANTESEOD, 2016-11-04 Last Plotted: 2016-11-04
Filename: P:\60513310\60513310-CAD\CONSTR-CADD\SHEETS\60513310-SHT-SB-0001-S-0001.DWG
Printed on Recycled Paper

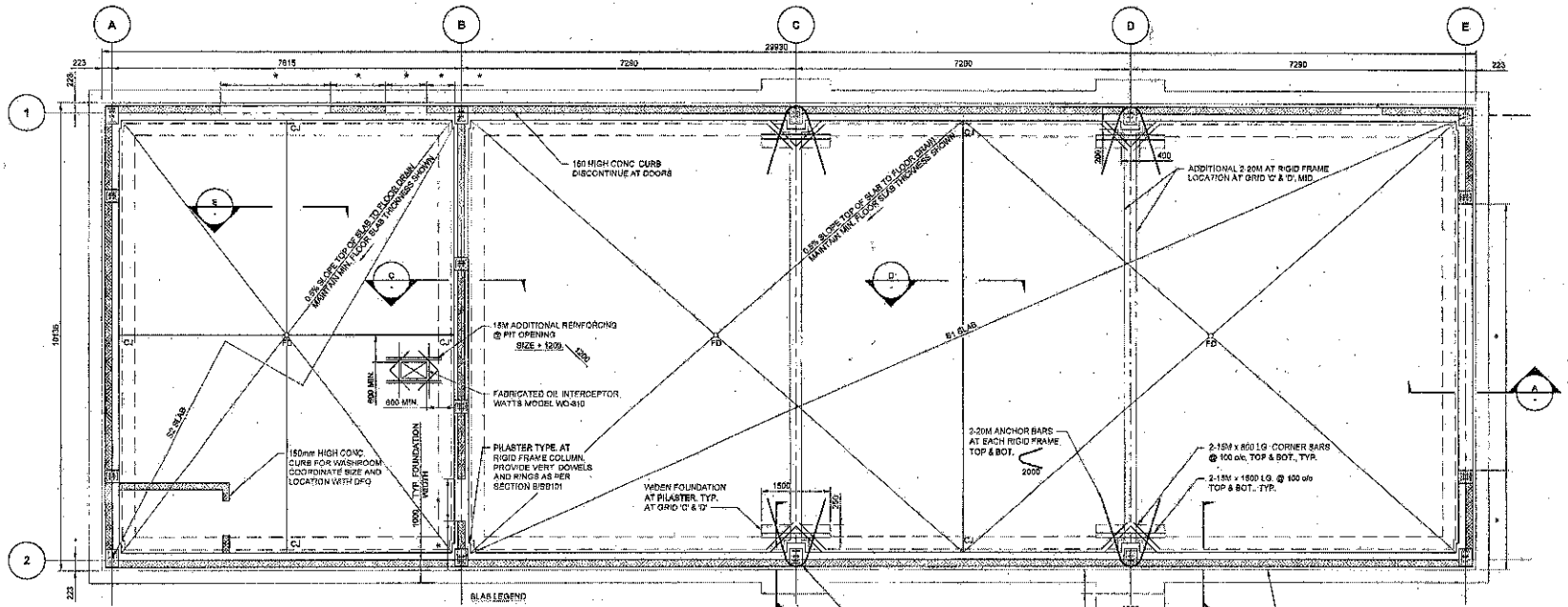

FOUNDATION PLAN (BOATHOUSE)

Scale 1:50

0 1250 2500 mm

SLAB LEGEND

S1 - 250 THICK R/W 20M @ 300 o/c, TOP & BOT., EACH WAY.

S2 - 150 THICK R/W 15M @ 300 o/c, TOP, EACH WAY.

NOTE

* ** - DOOR OPENING SIZE AND LOCATION TO BE CONFIRMED WITH DFO
* PROVIDE ROUGH-IN PLUMBING FOR WASHROOM AND FLOOR DRAIN AS DIRECTED BY DFO

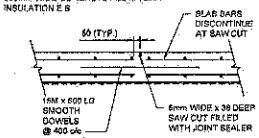

D | CONTROL JOINT (CJ) DETAIL-1

S1 SLAB

Scale 1:20

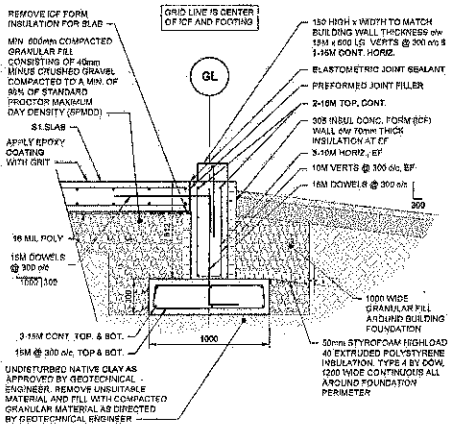

A | TYPICAL ICF WALL DETAIL

Scale 1:20

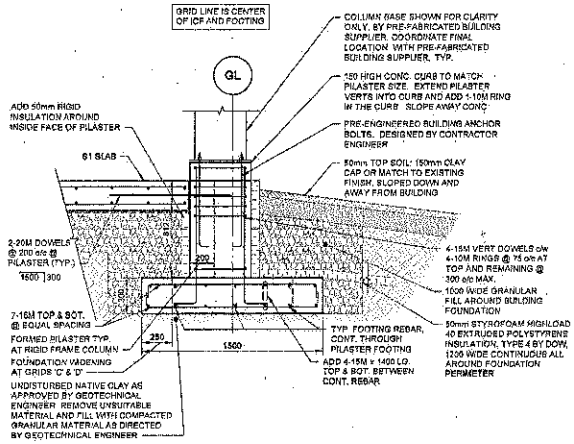

B | WALL SECTION AT RIGID COLUMN

Scale 1:20

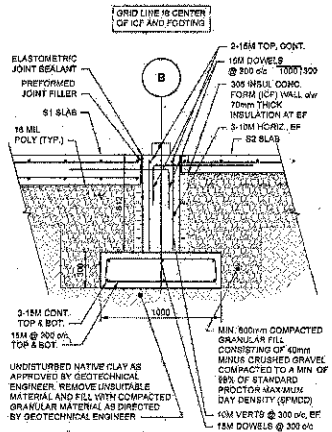

C | CONCRETE WALL DETAIL

Scale 1:20

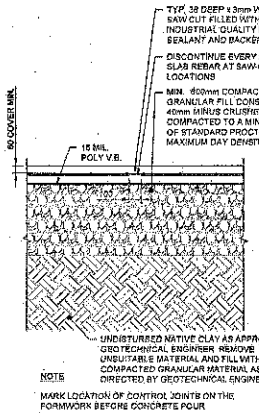

NOTE

MARK LOCATION OF CONTROL JOINTS ON THE FORMWORK BEFORE CONCRETE POUR

E | CONTROL JOINT (CJ) DETAIL-2

S2 SLAB

Scale 1:20

AECOM

PROJECT

PRE-FABRICATED BUILDING FOUNDATION

GIMLI S&R STATION
95 FIRST STREET
GIMLI, MB

CLIENT

FISHERIES AND OCEANS CANADA

520 EXMOUTH STREET
SARNIA, ON N7T8B1
519.383.1813 tel 519.464.5128 fax
www.dfo.mpo.gc.ca

CONSULTANT

AECOM
99 Commerce Drive
Winnipeg, Manitoba R3P 0Y7
204.477.5381 tel 204.284.2040 fax
www.aecom.com

REGISTRATION

PROVINCE OF MANITOBA
M. M. HOQUE
MEMBER 30114
REGISTERED PROFESSIONAL ENGINEER

AECOM
Certificate of Authorization
AECOM Canada Ltd.
No. 4671 Date: 2016.11.04

ISSUE/REVISION

0	2016.11.04	ISSUED FOR TENDER
VR	DATE	DESCRIPTION

KEY PLAN

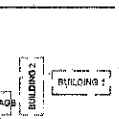

PROJECT NUMBER

60513310

SHEET TITLE

BOAT HOUSE BUILDING FOUNDATION PLAN AND TYPICAL DETAILS

SHEET NUMBER

SB101

Project Management Initials: Designer: Checked: Approved: ISO A1 594mm x 841mm

Last Saved By: LANDERSC2016-11-04 Last Plotted: 2016-11-04
Filename: P:\60513310\60513310_CIVIL\10-CAD\50-SHEETS\SB101\SB101-FOUNDATION-PLAN-BOAT-HOUSE.DWG

Plotted on: Plotter (Canon iR-ADV C5235 PS)
Recycled Distance Plotted

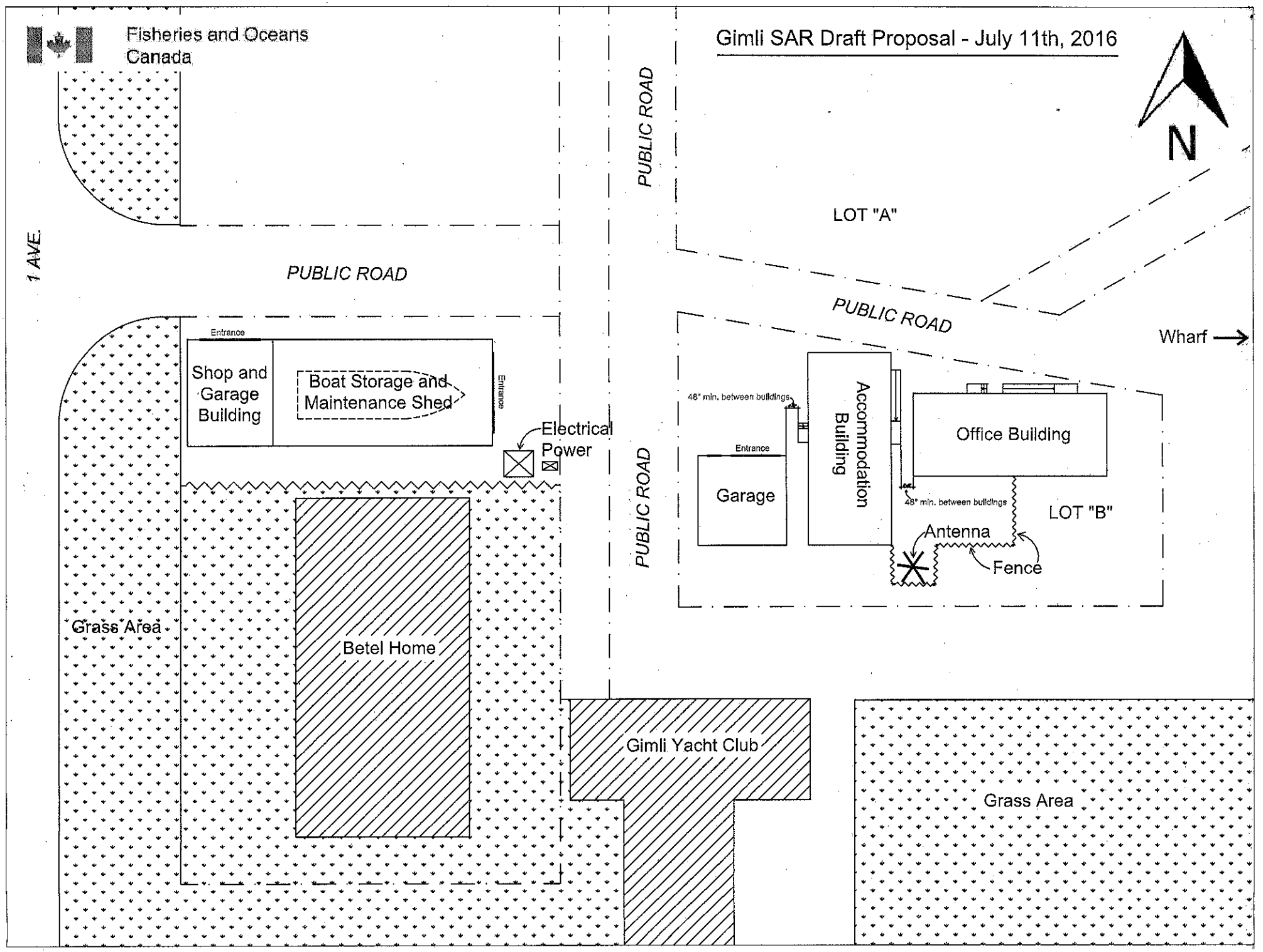
Fisheries and Oceans Canada
Gimli SAR Draft Proposal - July 11th, 2016
N
1 AVE.
PUBLIC ROAD
PUBLIC ROAD
PUBLIC ROAD
PUBLIC ROAD
LOT "A"
LOT "B"
Wharf
Entrance
Shop and Garage Building
Boat Storage and Maintenance Shed
Entrance
Electrical Power
Grass Area
Betel Home
Gimli Yacht Club
Grass Area
48" min. between buildings
Entrance
Garage
Accommodation Building
Office Building
48" min. between buildings
Antenna
Fence