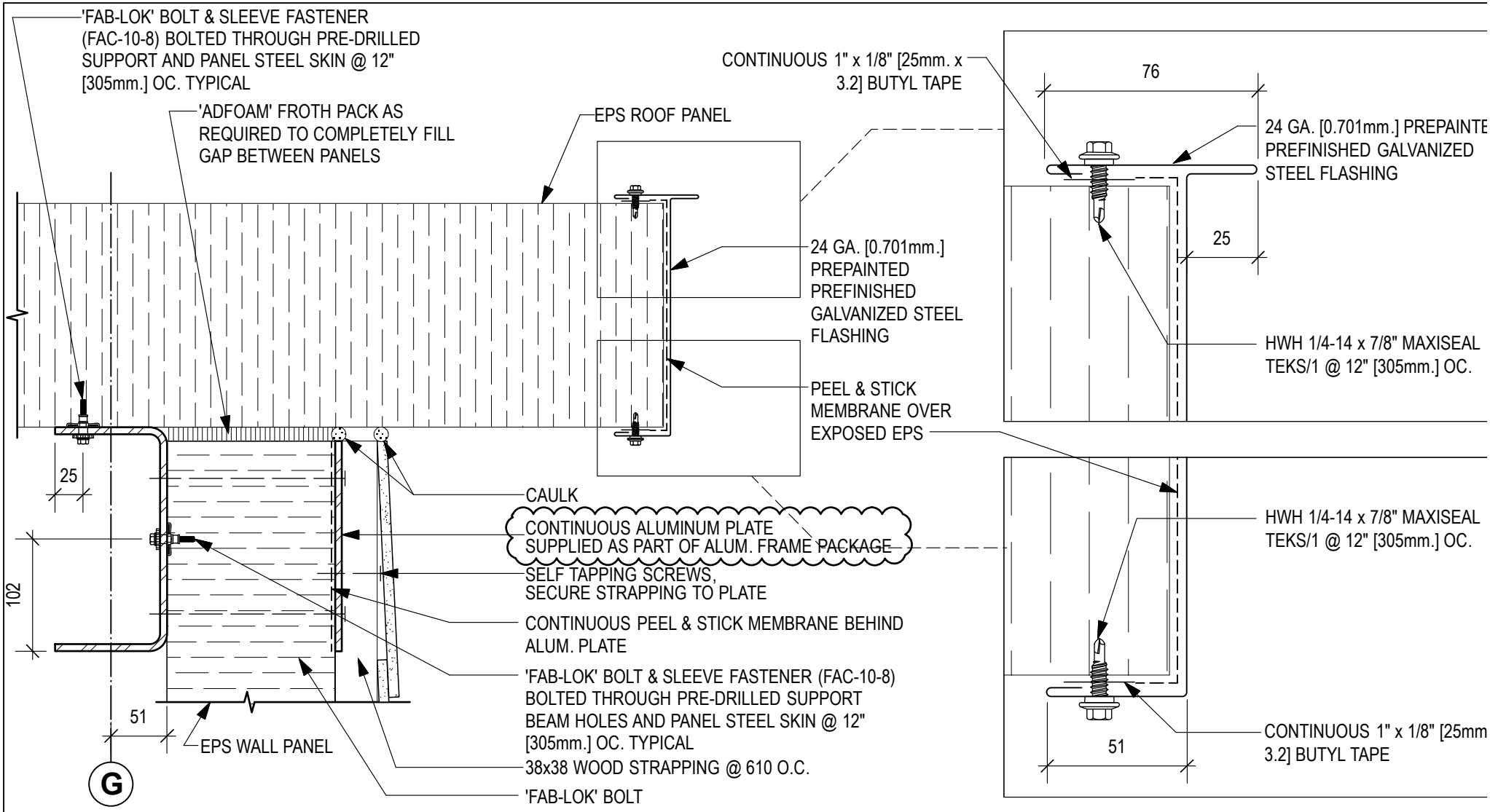

1
A6.02

TYPICAL ROOF GABLE DETAIL

SCALE: 1 : 5