Public Works and Government Services Canada | Travaux publics et Services gouvernementaux Canada

RETURN BIDS TO:
RETOURNER LES SOUMISSIONS À:

Bid Receiving Public Works and Government Services Canada/Réception des soumissions Travaux publics et Services gouvernementaux Canada
Pacific Region
401 - 1230 Government Street
Victoria, B.C.
V8W 3X4
Bid Fax: (250) 363-3344

SOLICITATION AMENDMENT
MODIFICATION DE L'INVITATION

The referenced document is hereby revised; unless otherwise indicated, all other terms and conditions of the Solicitation remain the same.

Ce document est par la présente révisé; sauf indication contraire, les modalités de l'invitation demeurent les mêmes.

Comments - Commentaires

Vendor/Firm Name and Address
Raison sociale et adresse du fournisseur/de l'entrepreneur

Issuing Office - Bureau de distribution

Public Works and Government Services Canada - Pacific Region
401 - 1230 Government Street
Victoria, B. C.
V8W 3X4

Title - Sujet Kiosques de montagne-stns sismiques	
Solicitation No. - N° de l'invitation 23490-170668/A	**Amendment No. - N° modif.** 003
Client Reference No. - N° de référence du client 23490-170668	**Date** 2016-11-28
GETS Reference No. - N° de référence de SEAG PW-$VIC-249-7111	
File No. - N° de dossier VIC-6-39133 (249)	**CCC No./N° CCC - FMS No./N° VME**
Solicitation Closes - L'invitation prend fin **at - à 02:00 PM** **on - le 2016-12-27**	**Time Zone** **Fuseau horaire** Pacific Standard Time PST
F.O.B. - F.A.B. **Plant-Usine:** ☐ **Destination:** ☑ **Other-Autre:** ☐	
Address Enquiries to: - Adresser toutes questions à: Cress, Christine	**Buyer Id - Id de l'acheteur** vic249
Telephone No. - N° de téléphone (250) 363-8442 ( )	**FAX No. - N° de FAX** ( ) -
Destination - of Goods, Services, and Construction: **Destination - des biens, services et construction:** DEPARTMENT OF NATURAL RESOURCES 9860 W SAANICH RD SIDNEY British Columbia V8L 5T5 Canada	

Instructions: See Herein

Instructions: Voir aux présentes

Delivery Required - Livraison exigée See Herein	**Delivery Offered - Livraison proposée**
Vendor/Firm Name and Address **Raison sociale et adresse du fournisseur/de l'entrepreneur** **Telephone No. - N° de téléphone** **Facsimile No. - N° de télécopieur**	
Name and title of person authorized to sign on behalf of Vendor/Firm (type or print) **Nom et titre de la personne autorisée à signer au nom du fournisseur/ de l'entrepreneur (taper ou écrire en caractères d'imprimerie)** **Signature** **Date**	

Canada

La présente modification 003 à l'invitation à soumissionner vise à joindre des dessins supplémentaires à l'appendice 1 de l'annexe «A».

TOUTES LES AUTRES MODALITÉS DEMEURENT INCHANGÉES.

ITEM NO.	PART NUMBER	DESCRIPTION	QTY.
1	MTK 19169-24	Sill, Bottom R Side	1
2	MTK 19169-22	Sill, Bottom L Side	1
3	MTK 19169-23	Sill, Bottom Back Side	1
4	MTK 19169-21D	Sill, Bottom Door	1

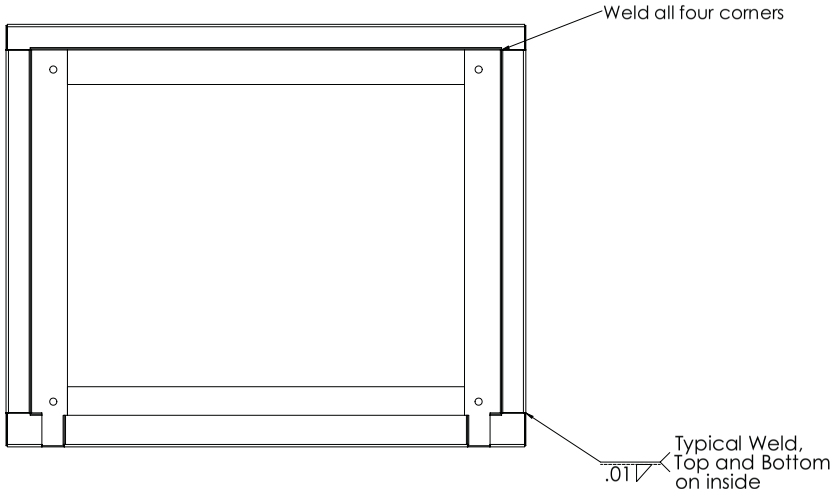

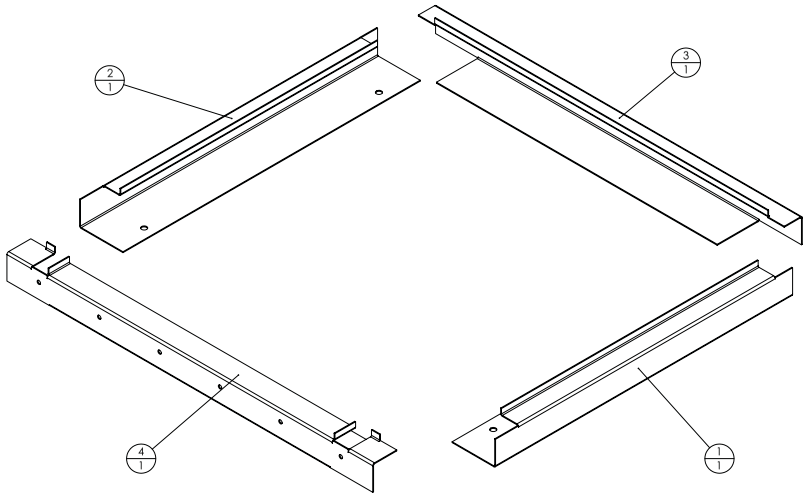

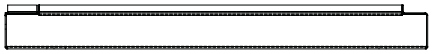

PROPRIETARY AND CONFIDENTIAL
THE INFORMATION CONTAINED IN THIS DRAWING IS THE SOLE PROPERTY OF THE Geological Survey of Canada (G.S.C). ANY REPRODUCTION IN PART OR AS A WHOLE WITHOUT THE WRITTEN PERMISSION OF THE G.S.C. IS PROHIBITED.

UNLESS OTHERWISE SPECIFIED:
DIMENSIONS ARE IN INCHES
TOLERANCES:
FRACTIONAL ±1/32
ANGULAR: MACH ±1 BEND ±1
TWO PLACE DECIMAL ±0.005
THREE PLACE DECIMAL ±0.001
INTERPRET GEOMETRIC TOLERANCING PER: ASME Y14.5-2009
MATERIAL
FINISH
DO NOT SCALE DRAWING

	NAME	DATE
DRAWN	DJP	2016-03-10
DESIGN	XXX	2016-03-03

COMMENTS

(CHIS) Mountaintop Kiosk

TITLE:
Frame, Bottom Sill Assembly, KIOSK

SIZE D | DWG. NO. MTK 19169 | REV A-2.0

SCALE: 1:5 | SHEET 1 OF 1

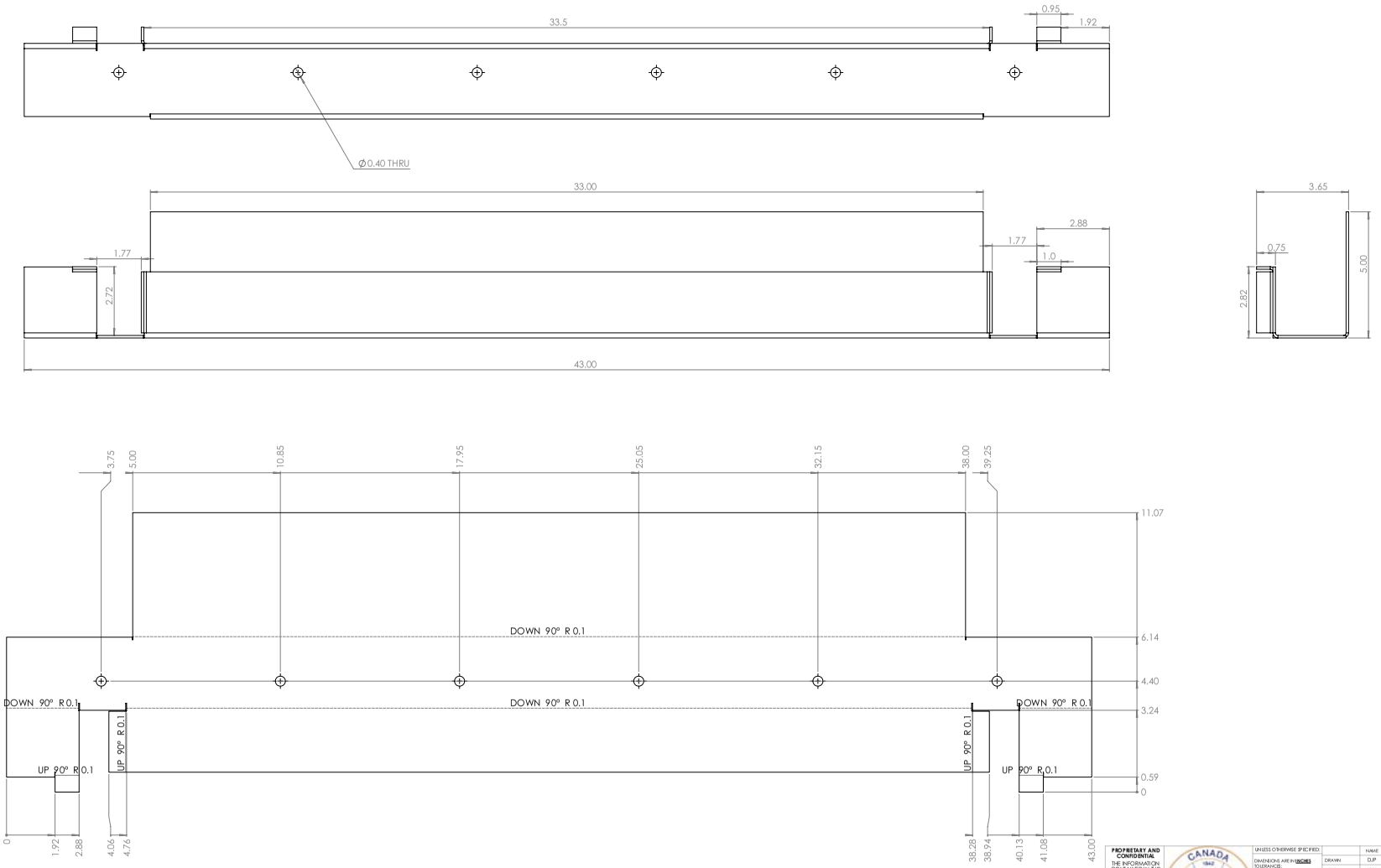

PROPRIETARY AND CONFIDENTIAL

THE INFORMATION CONTAINED IN THIS DRAWING IS THE SOLE PROPERTY OF THE **Geological Survey of Canada (G.S.C)**. ANY REPRODUCTION IN PART OR AS A WHOLE WITHOUT THE WRITTEN PERMISSION OF THE **G.S.C.** IS PROHIBITED.

UNLESS OTHERWISE SPECIFIED:
DIMENSIONS ARE IN **INCHES**
TOLERANCES:
FRACTIONAL 1/32
ANGULAR: MACH ±1 BEND ±1
TWO PLACE DECIMAL 0.005
THREE PLACE DECIMAL 0.001
INTERPRET GEOMETRIC TOLERANCING PER: **ASME Y14.5-2009**
MATERIAL
#10 ga 50 52-H32
FINISH
As Formed
DO NOT SCALE DRAWING

	NAME	DATE
DRAWN	DJP	2016-03-10
DESIGN	XXX	2016-03-03

COMMENTS

(CHIS) Mountaintop Kiosk

TITLE: Sill, Bottom Door

SIZE	DWG. NO.	REV
D	MTK 19169-21	A-2.0

SCALE: 1:2 SHEET 1 OF 1

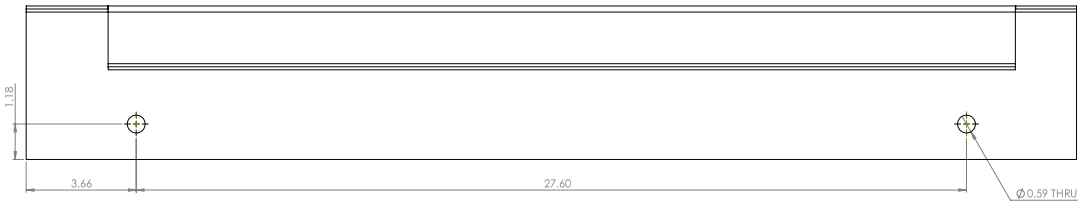

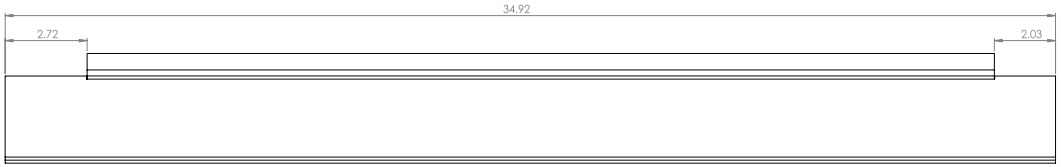

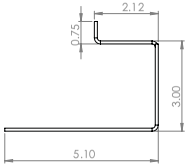

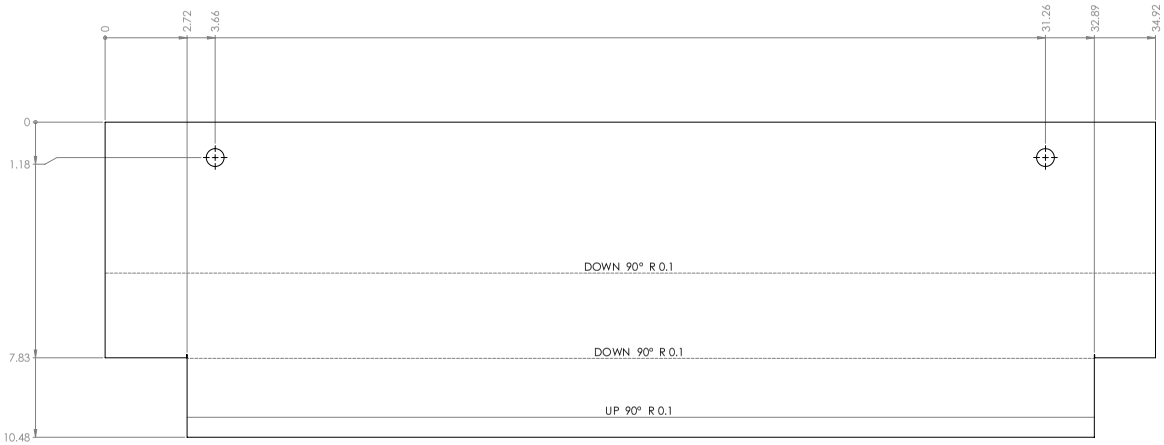

PROPRIETARY AND CONFIDENTIAL
THE INFORMATION CONTAINED IN THIS DRAWING IS THE SOLE PROPERTY OF the **Geological Survey of Canada (G.S.C)**. ANY REPRODUCTION IN PART OR AS A WHOLE WITHOUT THE WRITTEN PERMISSION OF THE **G.S.C.** IS PROHIBITED.

UNLESS OTHERWISE SPECIFIED:
DIMENSIONS ARE IN **INCHES**
TOLERANCES:
FRACTIONAL ±1/32
ANGULAR: MACH ±1 BEND ±1
TWO PLACE DECIMAL ±0.005
THREE PLACE DECIMAL ±0.001
INTERPRET GEOMETRIC TOLERANCING PER: **ASME Y14.5-2009**
MATERIAL
10 ga 5052-H32
FINISH
As Formed
DO NOT SCALE DRAWING

	NAME	DATE
DRAWN	HOV	XXX
DESIGN	HOV	XXX

COMMENTS

(CHIS) Mountaintop Kiosk

TITLE:
Sill, Bottom L Side

SIZE	DWG. NO.	REV
D	MTK 19169-22	A-1.0

SCALE: 1:2 SHEET 1 OF 1

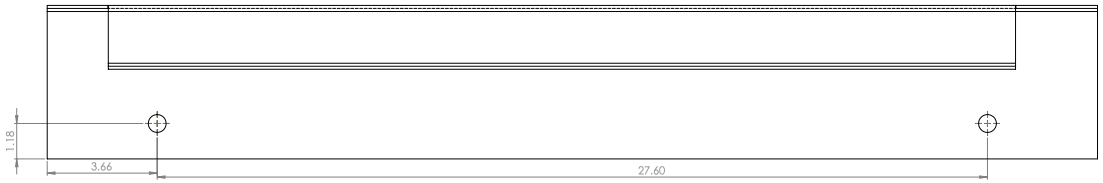

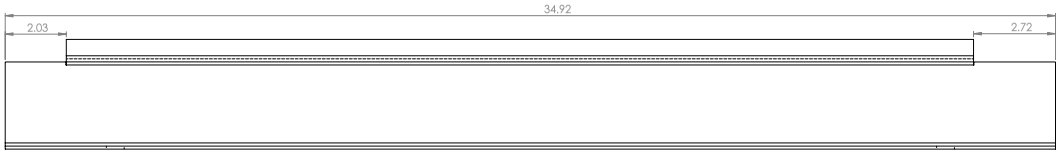

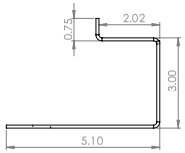

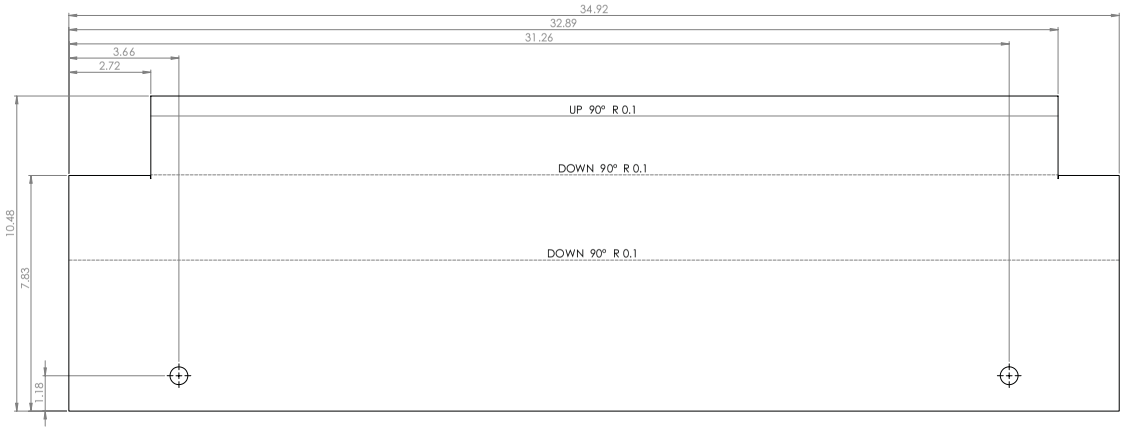

PROPRIETARY AND CONFIDENTIAL
THE INFORMATION CONTAINED IN THIS DRAWING IS THE SOLE PROPERTY OF THE **Geological Survey of Canada (G.S.C)**. ANY REPRODUCTION IN PART OR AS A WHOLE WITHOUT THE WRITTEN PERMISSION OF THE **G.S.C.** IS PROHIBITED.

UNLESS OTHERWISE SPECIFIED:
DIMENSIONS ARE IN **INCHES**
TOLERANCES:
FRACTIONAL ±1/32
ANGULAR: MACH ±1 BEND ±1
TWO PLACE DECIMAL ±0.005
THREE PLACE DECIMAL ±0.001
INTERPRET GEOMETRIC TOLERANCING PER: **ASME Y14.5-2009**
MATERIAL
#10 ga 5052-H32
FINISH
As Formed
DO NOT SCALE DRAWING

	NAME	DATE
DRAWN	HOV	XXX
DESIGN	HOV	XXX

COMMENTS:

(CHIS) Mountaintop Kiosk

TITLE:
Sill, Bottom R Side

SIZE	DWG. NO.	REV
D	MTK 191 69-24	A-1.0

SCALE: 1:2 SHEET 1 OF 1

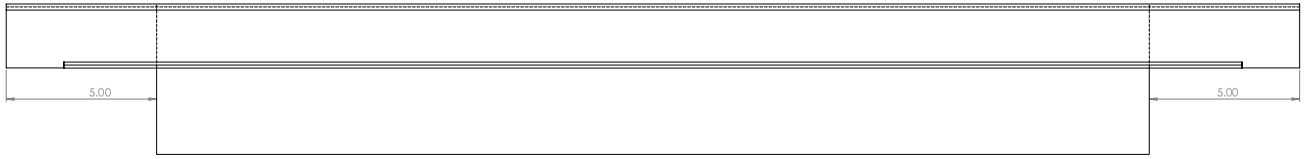

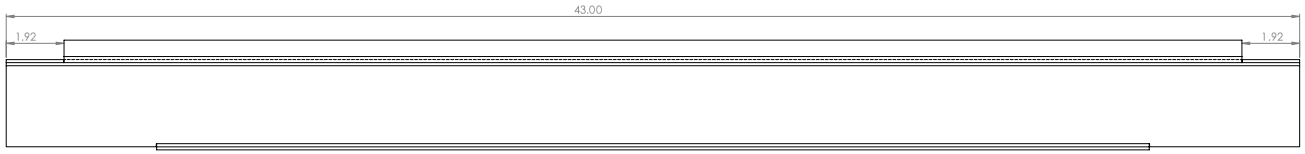

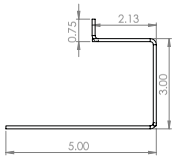

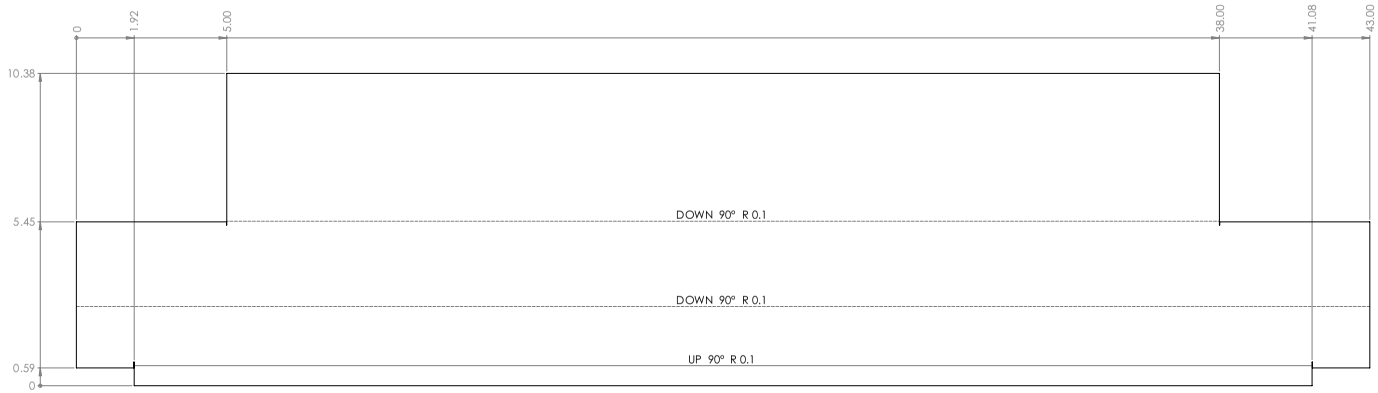

PROPRIETARY AND CONFIDENTIAL
THE INFORMATION CONTAINED IN THIS DRAWING IS THE SOLE PROPERTY OF the **Geological Survey of Canada (G.S.C)**. ANY REPRODUCTION IN PART OR AS A WHOLE WITHOUT THE WRITTEN PERMISSION OF THE **G.S.C.** IS PROHIBITED.

UNLESS OTHERWISE SPECIFIED:
DIMENSIONS ARE IN **INCHES**
TOLERANCES:
FRACTIONAL ±1/32
ANGULAR: MACH ±1 BEND ±1
TWO PLACE DECIMAL ±0.005
THREE PLACE DECIMAL ±0.001
INTERPRET GEOMETRIC TOLERANCING PER: **ASME Y14.5-2009**
MATERIAL
#10 ga 5052-H32
FINISH
As Formed
DO NOT SCALE DRAWING

	NAME	DATE
DRAWN	HOV	XXX
DESIGN	HOV	XXX

COMMENTS:

(CHIS) Mountaintop Kiosk

TITLE:
Sill, Bottom Back Side

SIZE	DWG. NO.	REV
D	MTK 191 69-23	A-1.0

SCALE: 1:2 SHEET 1 OF 1

ITEM NO.	PART NUMBER	DESCRIPTION	Supplier	QTY.
1	MTK 19202-21	BASE, JCT BOX, 12X12X8, AL KIOSK		1
2	MTK 19202-22	END CAP JCT BOX		2
3	MTK 19202-24	Rain Lip		1
4	MTK 19202-23	TAB		2
5	MTK 19203	LID, JCT BOX, 12X12X8, AL		1
6	96439A610	1/4"-20 SS PRESS-IN NUT FOR SHEET MTL	© 2015 McMaster-Carr Supply Company	4
7	90945A760	1/4 SS flat washer .468 OD	© 2014 McMaster-Carr Supply Company	4
8	93190A537	1/4-20 x1/2 SS HHCS	© 2014 McMaster-Carr Supply Company	4

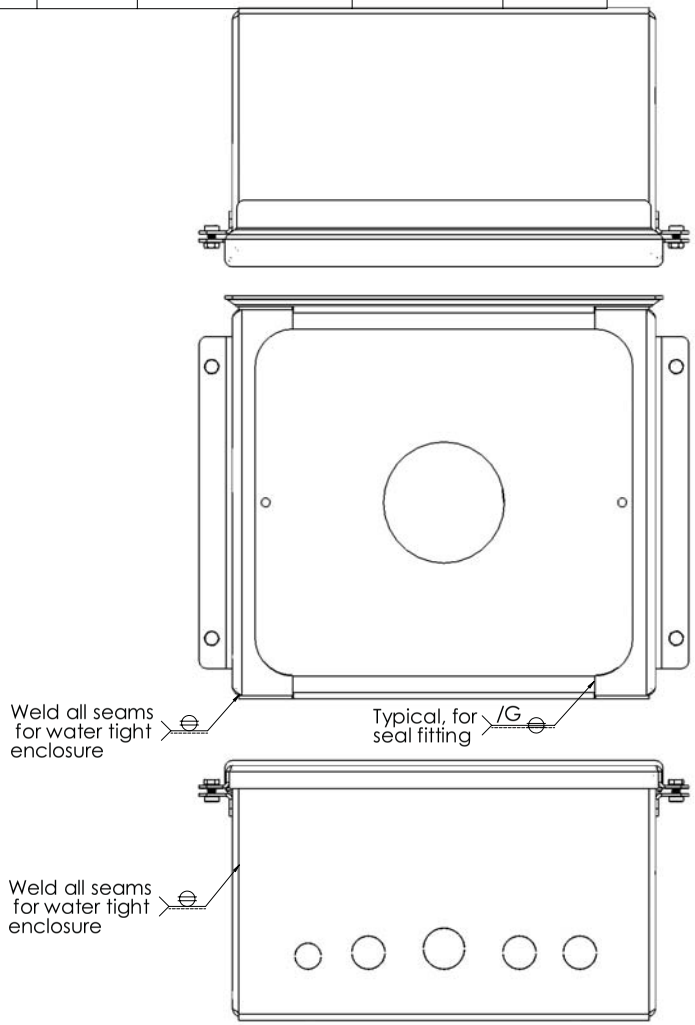

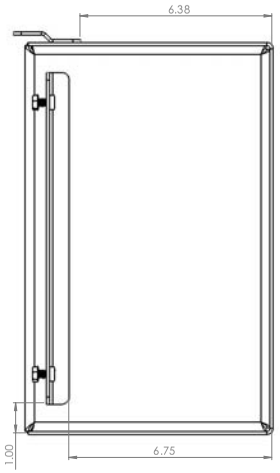

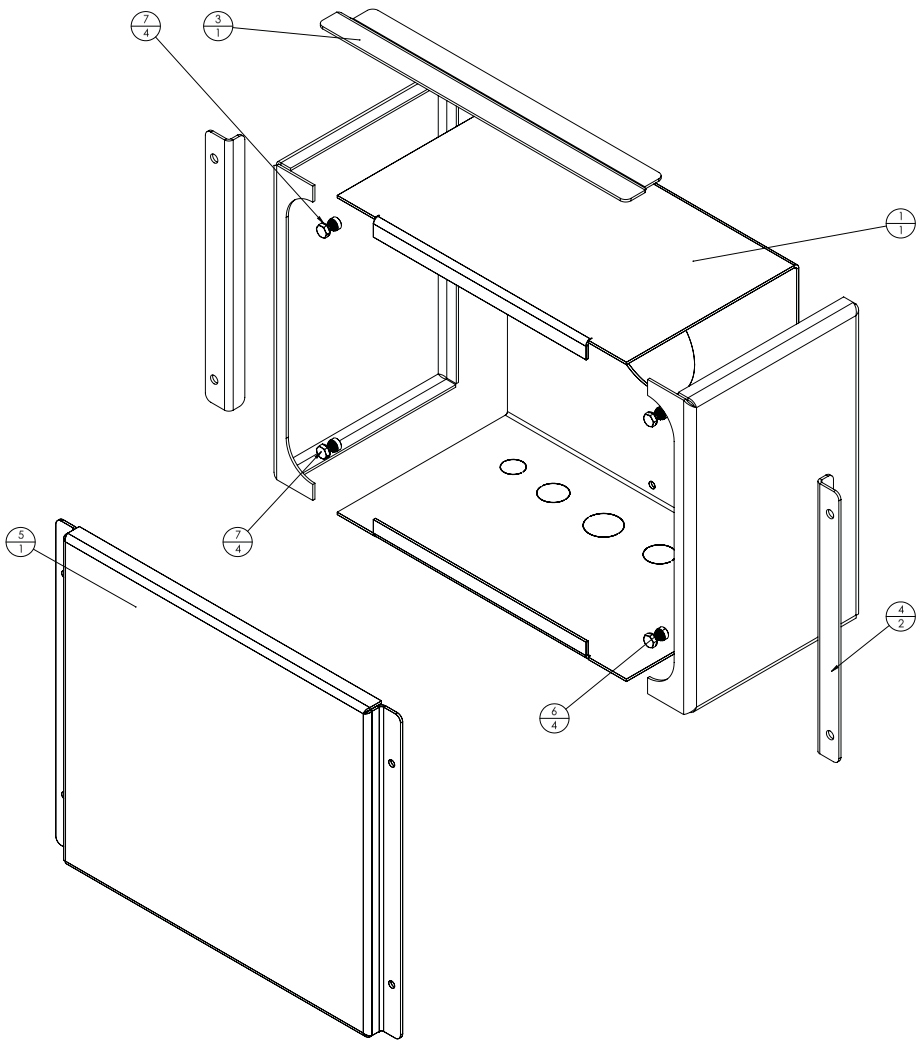

PROPRIETARY AND CONFIDENTIAL
THE INFORMATION CONTAINED IN THIS DRAWING IS THE SOLE PROPERTY OF the **Geological Survey of Canada (G.S.C)**. ANY REPRODUCTION IN PART OR AS A WHOLE WITHOUT THE WRITTEN PERMISSION OF THE **G.S.C.** IS PROHIBITED.

UNLESS OTHERWISE SPECIFIED:
DIMENSIONS ARE IN **INCHES**
TOLERANCES:
FRACTIONAL ±1/32
ANGULAR: MACH ±1 BEND ±1
TWO PLACE DECIMAL ±0.005
THREE PLACE DECIMAL ±0.001
INTERPRET GEOMETRIC TOLERANCING PER: **ASME Y14.5-2009**
MATERIAL
FINISH
DO NOT SCALE DRAWING

COMMENTS:

	NAME	DATE
DRAWN	HOV	XXX
DESIGN	HOV	XXX

(CHIS) Mountaintop Kiosk

TITLE:
, JCT BOX, 12X12X8, AL, KIOSK

SIZE **D** | DWG. NO. MTK 19202 | REV A-1.0

SCALE: 1:2 | SHEET 1 OF 1

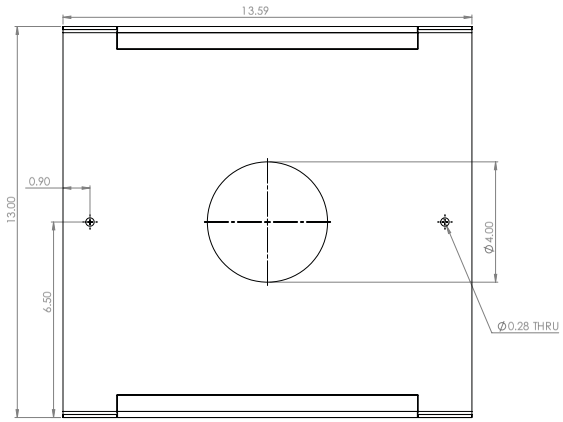

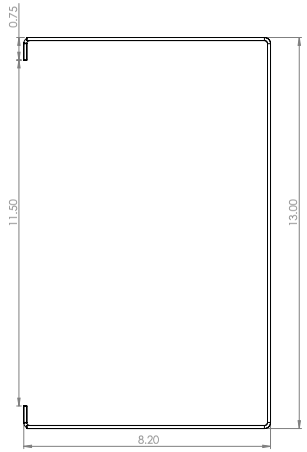

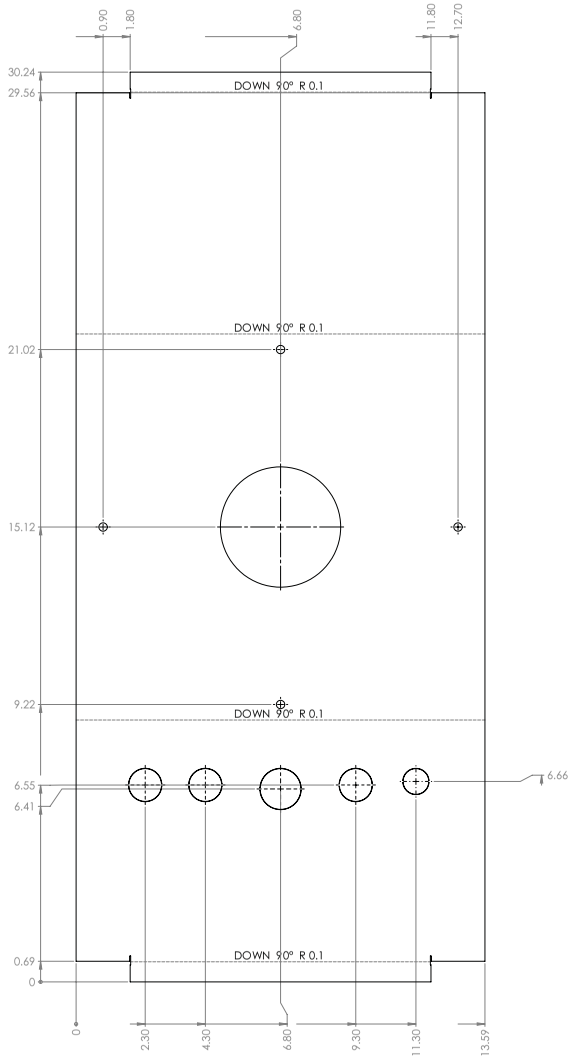

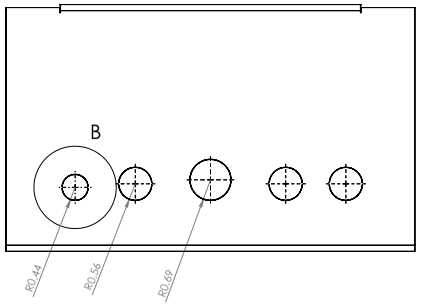

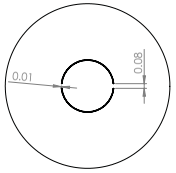

Knock Out and Tabs for Cable Bulkhead Fittings (Typical)

DETAIL B

SCALE 1 : 1

PROPRIETARY AND CONFIDENTIAL
THE INFORMATION CONTAINED IN THIS DRAWING IS THE SOLE PROPERTY OF the **Geological Survey of Canada (G.S.C)**. ANY REPRODUCTION IN PART OR AS A WHOLE WITHOUT THE WRITTEN PERMISSION OF THE **G.S.C.** IS PROHIBITED.

UNLESS OTHERWISE SPECIFIED:
DIMENSIONS ARE IN **INCHES**
TOLERANCES:
FRACTIONAL ±1/32
ANGULAR: MACH ±1 BEND ±1
TWO PLACE DECIMAL ±0.005
THREE PLACE DECIMAL ±0.001
INTERPRET GEOMETRIC TOLERANCING PER: **ASME Y14.5-2009**
MATERIAL
#10 ga 5052-H32
FINISH
As Formed
DO NOT SCALE DRAWING

	NAME	DATE
DRAWN	HOV	XXX
DESIGN	HOV	XXX

COMMENTS:

(CHIS) Mountaintop Kiosk

TITLE:
BASE, JCT BOX, 12X12X8, AL KIOSK

SIZE	DWG. NO.	REV
D	MTK 19202-21	A-2.0

SCALE: 1:2 SHEET 1 OF 1

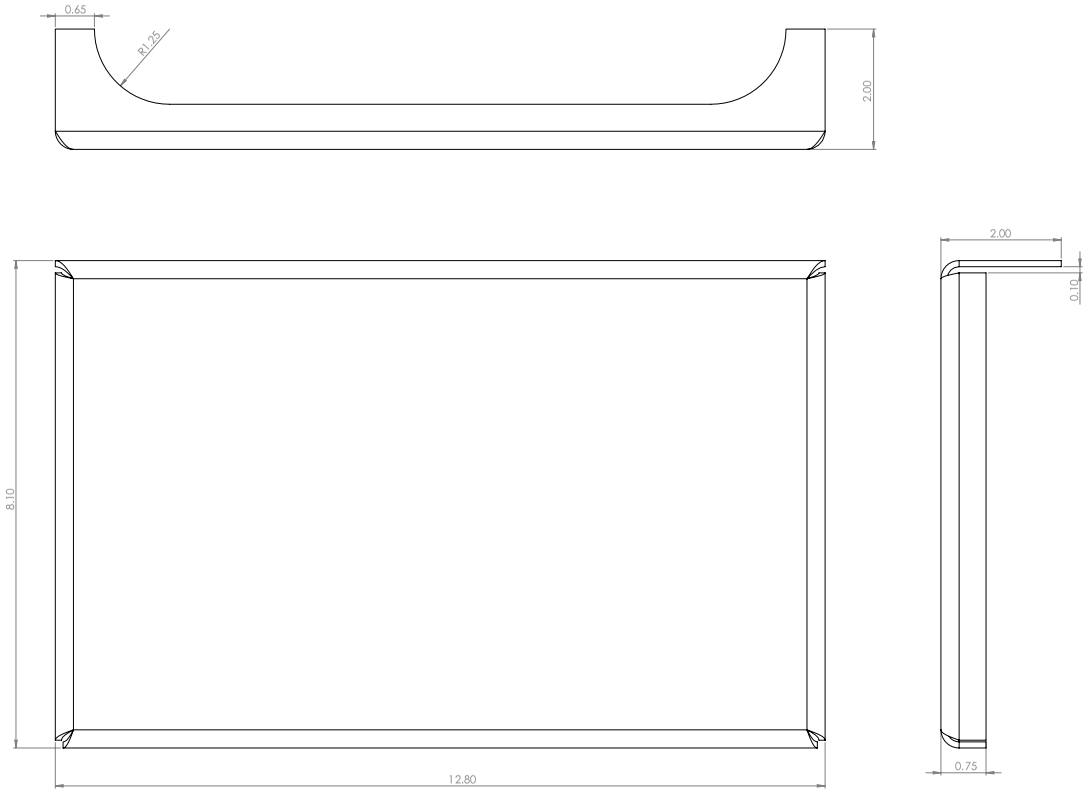

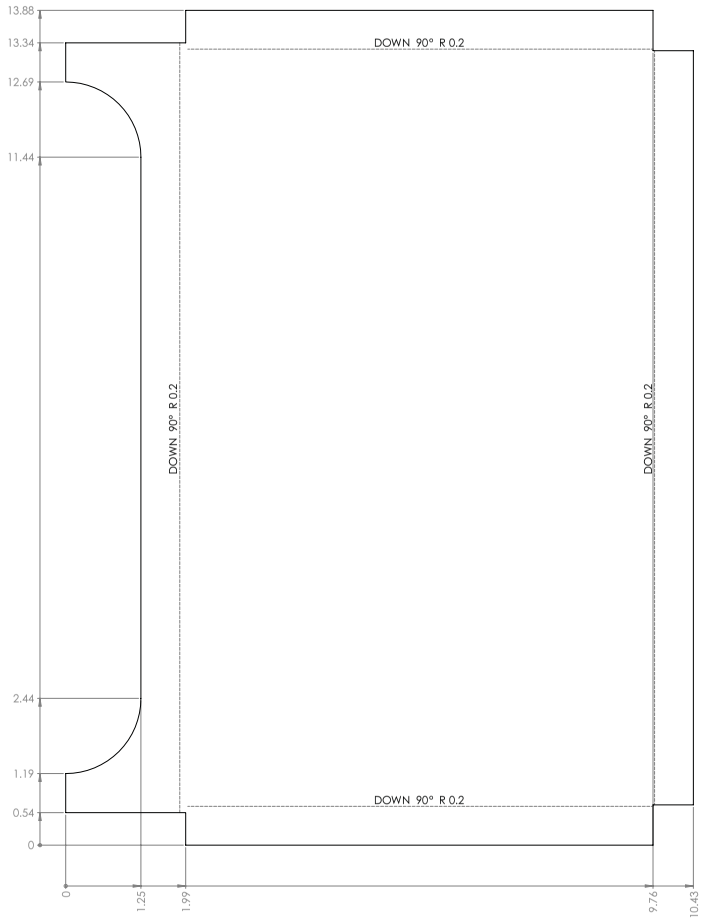

PROPRIETARY AND CONFIDENTIAL
THE INFORMATION CONTAINED IN THIS DRAWING IS THE SOLE PROPERTY OF the **Geological Survey of Canada (G.S.C)**. ANY REPRODUCTION IN PART OR AS A WHOLE WITHOUT THE WRITTEN PERMISSION OF THE **G.S.C.** IS PROHIBITED.

UNLESS OTHERWISE SPECIFIED:
DIMENSIONS ARE IN **INCHES**
TOLERANCES:
FRACTIONAL ±1/32
ANGULAR: MACH ±1 BEND ±1
TWO PLACE DECIMAL ±0.005
THREE PLACE DECIMAL ±0.001
INTERPRET GEOMETRIC TOLERANCING PER: **ASME Y14.5-2009**
MATERIAL
#10 ga 304 SS 2-H32
FINISH
DO NOT SCALE DRAWING

	NAME	DATE
DRAWN	HOV	XXX
DESIGN	HOV	XXX

COMMENTS:

(CHIS) Mountaintop Kiosk

TITLE:
END CAP JCT BOX

SIZE	DWG. NO.	REV
D	MTK 19202-22	A-2.0

SCALE: 1:1 SHEET 1 OF 1

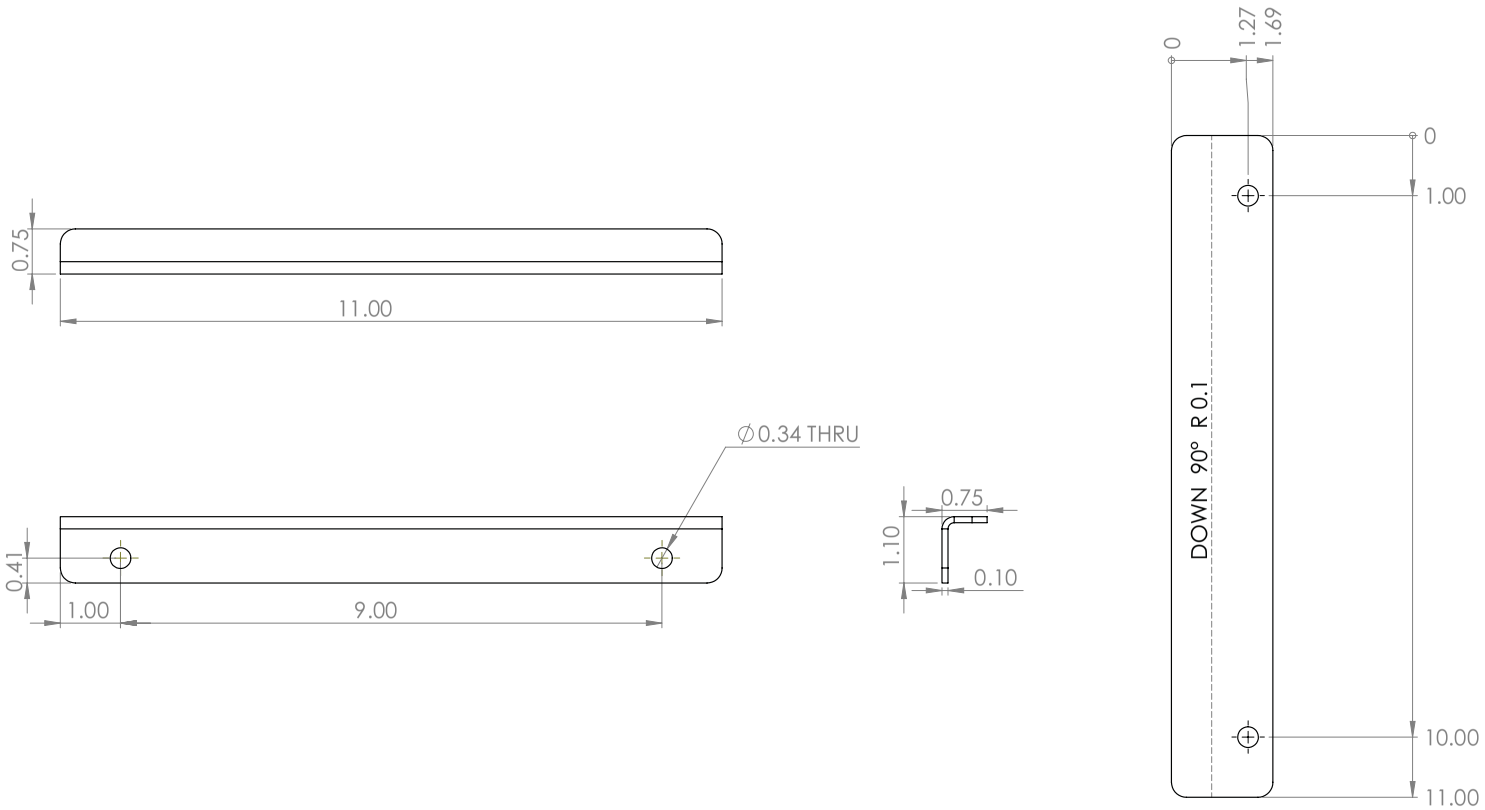

PROPRIETARY AND CONFIDENTIAL

THE INFORMATION CONTAINED IN THIS DRAWING IS THE SOLE PROPERTY OF the **Geological Survey of Canada (G.S.C)** ANY REPRODUCTION IN PART OR AS A WHOLE WITHOUT THE WRITTEN PERMISSION OF **G.S.C.** IS PROHIBITED.

GSC PACIFIC

Natural Resources Canada / Ressources naturelles Canada

UNLESS OTHERWISE SPECIFIED:

DIMENSIONS ARE IN **INCHES**
TOLERANCES:
FRACTIONAL: 1/32"
ANGULAR: MACH 0.1 BEND 0.1
TWO PLACE DECIMAL 0.005
THREE PLACE DECIMAL 0.001

INTERPRET GEOMETRIC TOLERANCING PER: **ASME Y14.5-2009**

MATERIAL
#10 ga 5052-H32

FINISH

DO NOT SCALE DRAWING

	NAME	DATE
DRAWN	HOV	XXX
DESIGN	HOV	XXX

COMMENTS:

PROJECT (GROUP)
(CHIS) Mountain Top Kiosk

TITLE:
TAB

SIZE **B** | DWG. NO. MTK 19202-23 | REV A-1.0

SCALE: 1:2 | SHEET 1 OF 1

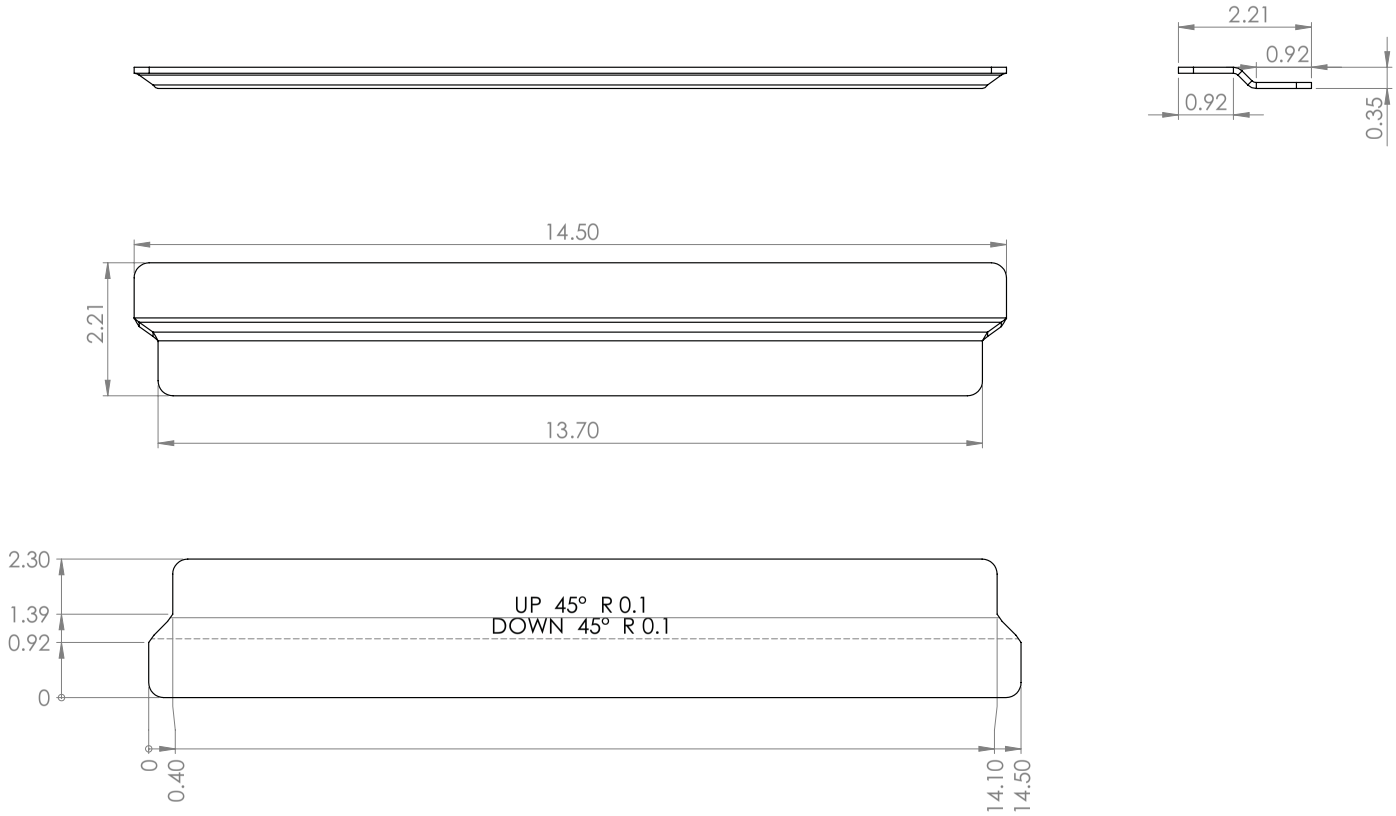

PROPRIETARY AND CONFIDENTIAL

THE INFORMATION CONTAINED IN THIS DRAWING IS THE SOLE PROPERTY OF the **Geological Survey of Canada (G.S.C)** ANY REPRODUCTION IN PART OR AS A WHOLE WITHOUT THE WRITTEN PERMISSION OF **G.S.C.** IS PROHIBITED.

GSC PACIFIC

Natural Resources Canada / Ressources naturelles Canada

UNLESS OTHERWISE SPECIFIED:

DIMENSIONS ARE IN **INCHES**
TOLERANCES:
FRACTIONAL: 1/32"
ANGULAR: MACH 0.1 BEND 0.1
TWO PLACE DECIMAL 0.005
THREE PLACE DECIMAL 0.001

INTERPRET GEOMETRIC TOLERANCING PER: **ASME Y14.5-2009**

MATERIAL
#10 ga 5052-H32

FINISH

DO NOT SCALE DRAWING

	NAME	DATE
DRAWN	HOV	XXX
DESIGN	HOV	XXX

COMMENTS:

PROJECT (GROUP)
(CHIS) Mountain Top Kiosk

TITLE:
Rain Lip

SIZE **B** | DWG. NO. MTK 19202-24 | REV A-1.0

SCALE: 1:2 | SHEET 1 OF 1

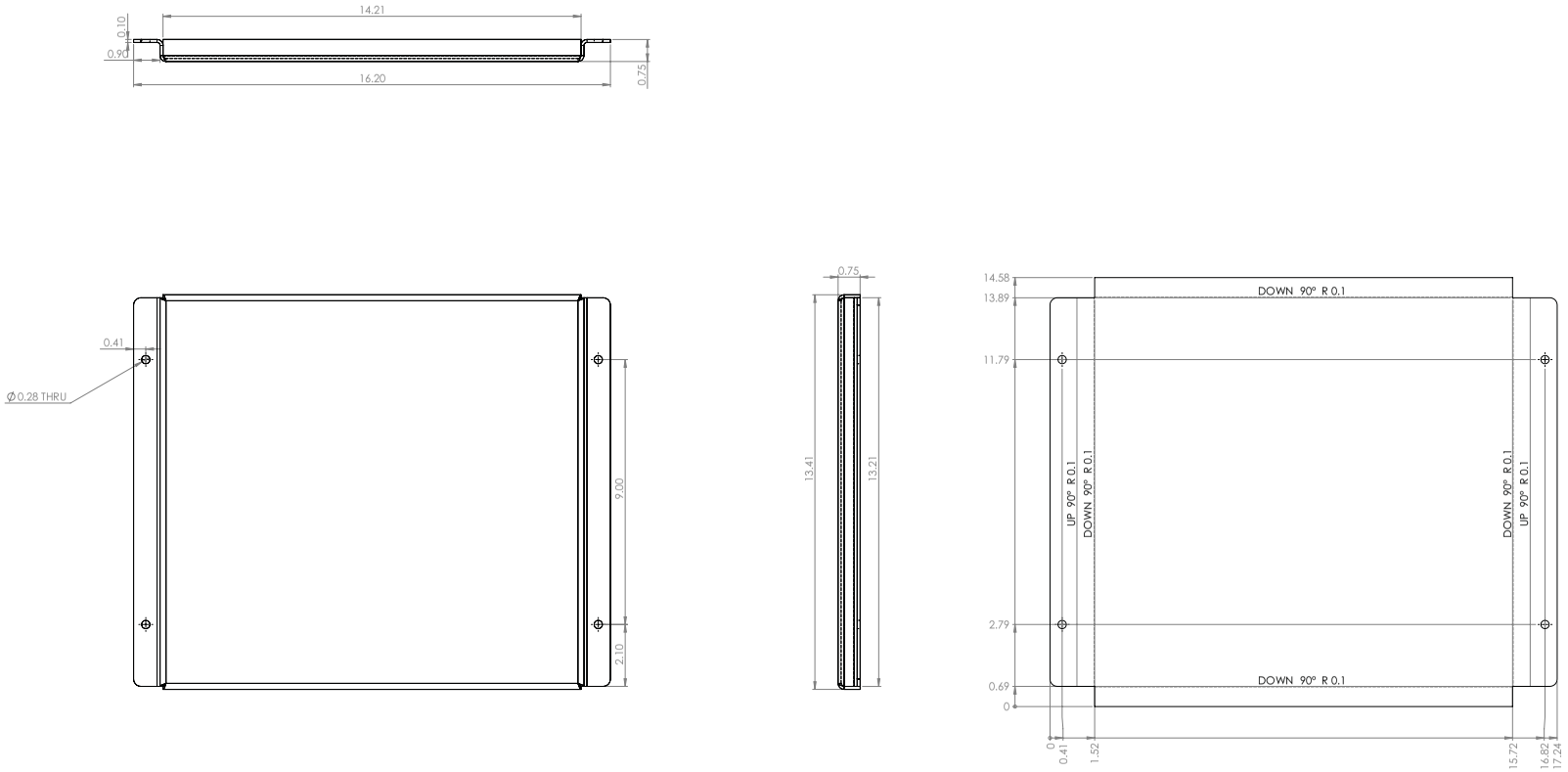

PROPRIETARY AND CONFIDENTIAL
THE INFORMATION CONTAINED IN THIS DRAWING IS THE SOLE PROPERTY OF the **Geological Survey of Canada (G.S.C)**. ANY REPRODUCTION IN PART OR AS A WHOLE WITHOUT THE WRITTEN PERMISSION OF THE **G.S.C.** IS PROHIBITED.

UNLESS OTHERWISE SPECIFIED:
DIMENSIONS ARE IN **INCHES**
TOLERANCES:
FRACTIONAL ±1/32
ANGULAR: MACH ±1 BEND ±1
TWO PLACE DECIMAL ±0.005
THREE PLACE DECIMAL ±0.001
INTERPRET GEOMETRIC TOLERANCING PER: **ASME Y14.5-2009**
MATERIAL
10 ga 5052-H32
FINISH
As Formed
DO NOT SCALE DRAWING

	NAME	DATE
DRAWN	HOV	XXX
DESIGN	HOV	XXX

COMMENTS:

(CHIS) Mountaintop Kiosk

TITLE:
LID, JCT BOX, 12X12X8, AL

SIZE	DWG. NO.	REV
D	MTK 19203	A-2.0

SCALE: 1:2 SHEET 1 OF 1

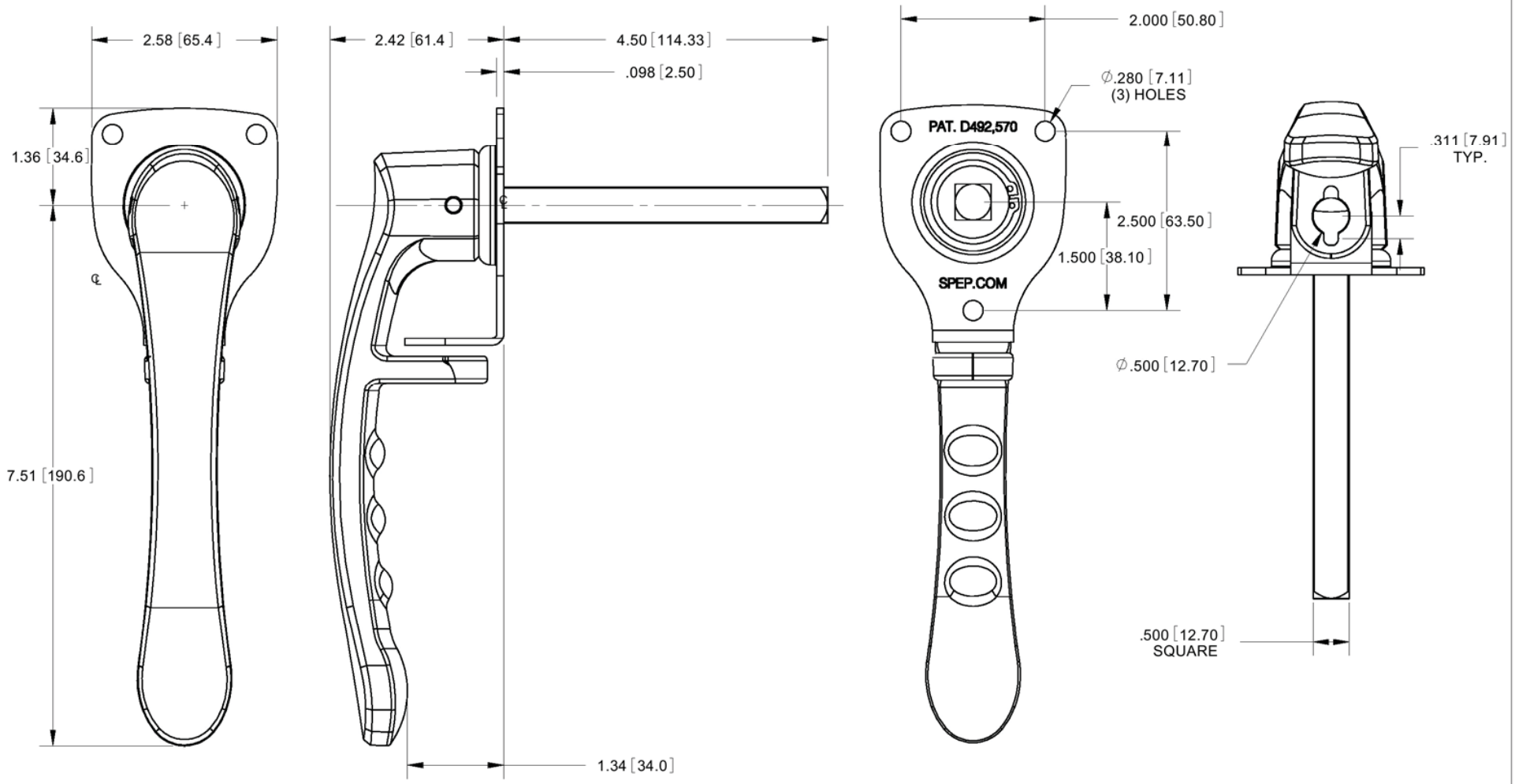

NOTES:

1. PART IS ROHS COMPLIANT.
2. DIMENSIONS IN BRACKETS ARE IN METRIC.

SIERRA PACIFIC

ENGINEERING AND PRODUCTS © SPEP.COM

CONFIDENTIAL PROPRIETARY INFORMATION | PLOT DATE: 10/2/2009

This document contains information that is the confidential and proprietary property of SPEP and may not be copied, published, or disclosed to others, or used for any purpose other than review, without the express written authorization of an authorized officer of SPEP. This document must be kept only in SPEP's confidential files when not in use.

UNSPECIFIED TOLERANCES

ANGLES: ±3°

INCHES		MM	
.XX	±.030	.X	±.76
.XXX	±.015	.XX	±.38
.XXXX	±.005	.XXX	±.13

MATERIAL:	STAINLESS STEEL
FINISH:	PASSIVATED
UNITS:	INCHES
SCALE:	1:1
	THIRD ANGLE PROJECTION
WEIGHT:	2.473
SIZE:	A
SHEET	1 OF 1
DWG. NO.	17461-310-SS-PS

PART NUMBER:	**310-SS-PS**
DESCRIPTION:	LARGE PADLOCKING L-HANDLE .500 SQUARE SHAFT

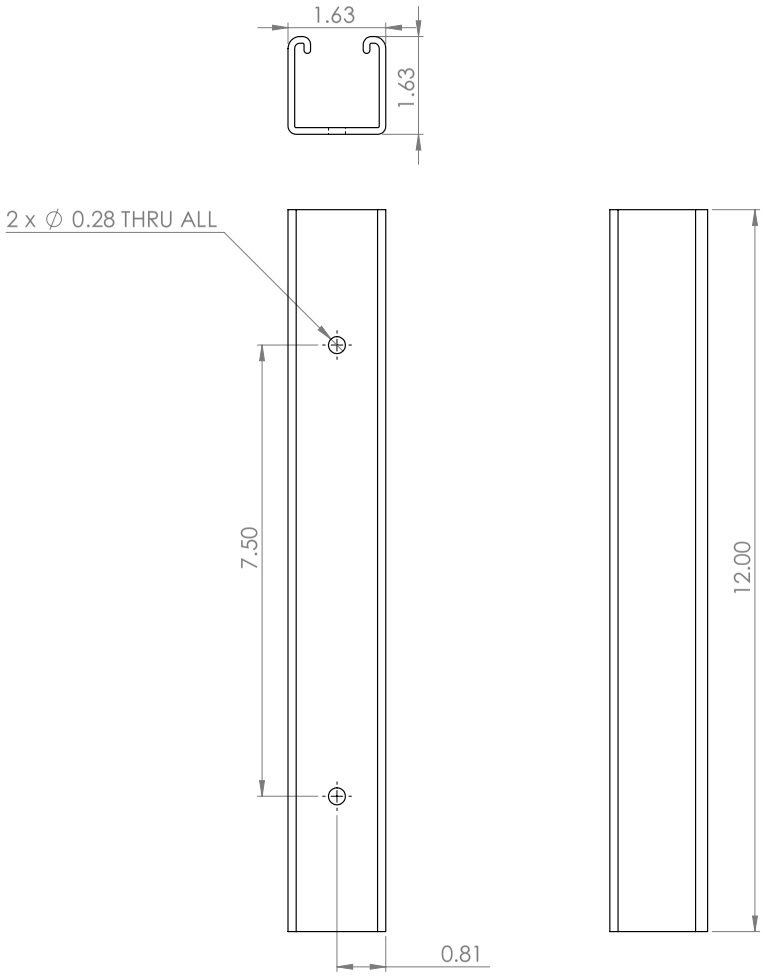

PROPRIETARY AND CONFIDENTIAL

THE INFORMATION CONTAINED IN THIS DRAWING IS THE SOLE PROPERTY OF the **Geological Survey of Canada (G.S.C)** ANY REPRODUCTION IN PART OR AS A WHOLE WITHOUT THE WRITTEN PERMISSION OF **G.S.C.** IS PROHIBITED.

GSC PACIFIC

Natural Resources Canada / Ressources naturelles Canada

UNLESS OTHERWISE SPECIFIED:

DIMENSIONS ARE IN **INCHES**
TOLERANCES:
FRACTIONAL: 1/32"
ANGULAR: MACH 0.1 BEND 0.1
TWO PLACE DECIMAL 0.005
THREE PLACE DECIMAL 0.001

INTERPRET GEOMETRIC TOLERANCING PER: **ASME Y14.5-2009**

MATERIAL: Stainless Steel

FINISH

DO NOT SCALE DRAWING

	NAME	DATE
DRAWN	DJP	2016-09-15
DESIGN		2016-09-12

COMMENTS:

PROJECT (GROUP): (CHIS) Mountain Top Kiosk

TITLE: 1-5/8" x 1-5/8" x 12" STRUT CHANNEL

SIZE: **B** | DWG. NO. 3310T194 | REV A-1.0

SCALE: 1:2 | SHEET 1 OF 1

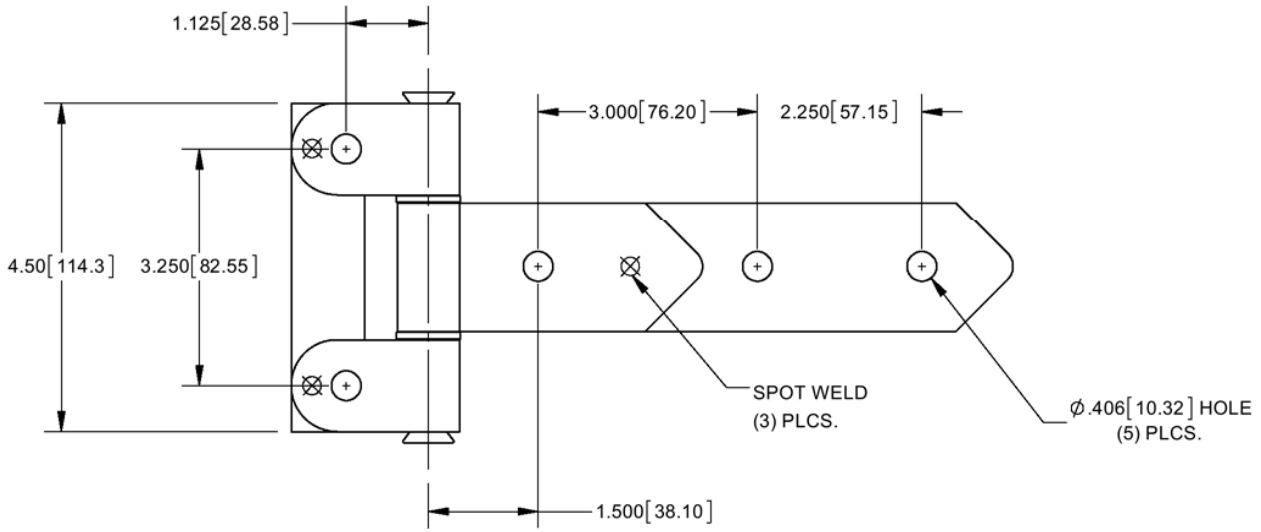

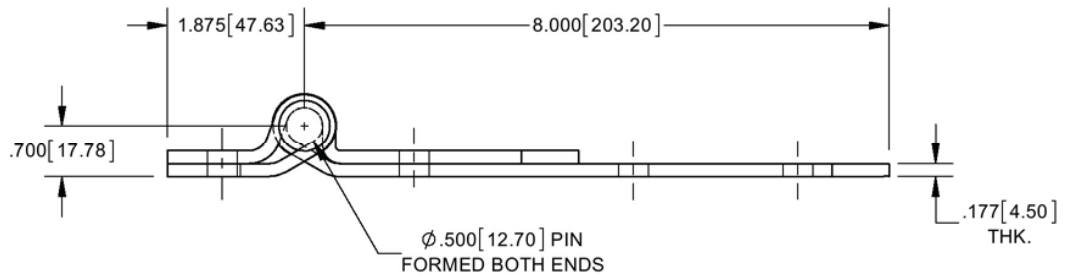

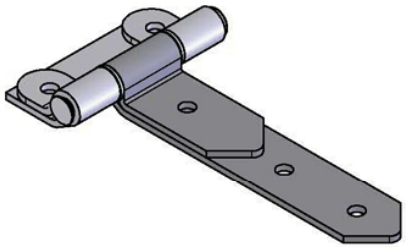

PART NO.	MATERIAL	FINISH	PIN
H1090A	ALUMINUM	MILL	NON-REMOVABLE, 304SS
H1090ZN	STEEL	ZINC PLATED	NON-REMOVABLE, STEEL

NOTE:
DIMENSIONS IN BRACKETS ARE IN METRIC.

SIERRA PACIFIC
ENGINEERING AND PRODUCTS ©
SPEP.COM

CONFIDENTIAL PROPRIETARY INFORMATION | PLOT DATE: 10/20/2014

This document contains information that is the confidential and proprietary property of SPEP and may not be copied, published, or disclosed to others, or used for any purpose other than review, without the express written authorization of an authorized officer of SPEP. This document must be kept only in SPEP's confidential files when not in use.

UNSPECIFIED TOLERANCES
ANGLES: ±3°

INCHES		MM	
.XX	±.030	.X	±.76
.XXX	±.015	.XX	±38
.XXXX	±.005	.XXX	±.13

MATERIAL: SEE TABLE
FINISH: SEE TABLE
UNITS: INCHES
SCALE: 1:2.5
THIRD ANGLE PROJECTION
WEIGHT: 2.132 | SIZE: A | SHEET 1 OF 1
DWG. NO. 16331-H1090A

PART NUMBER: **SEE TABLE**
DESCRIPTION: STRAP HINGE

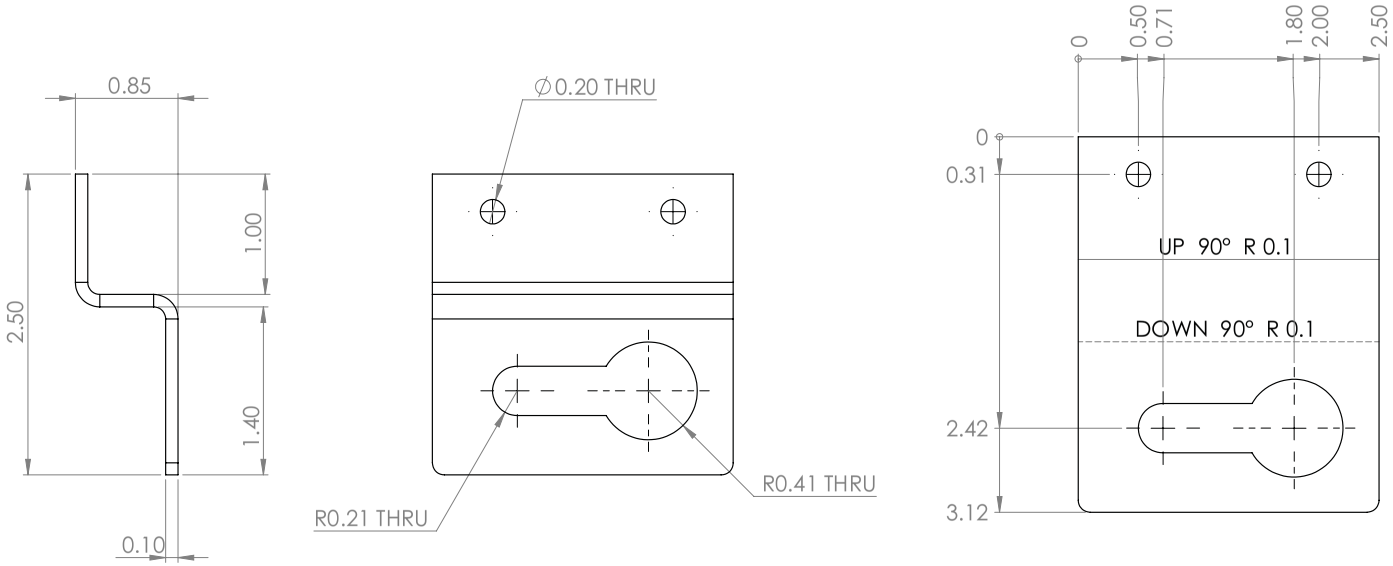

PROPRIETARY AND CONFIDENTIAL

THE INFORMATION CONTAINED IN THIS DRAWING IS THE SOLE PROPERTY OF the **Geological Survey of Canada (G.S.C)** ANY REPRODUCTION IN PART OR AS A WHOLE WITHOUT THE WRITTEN PERMISSION OF **G.S.C.** IS PROHIBITED.

GSC PACIFIC

Natural Resources Canada / Ressources naturelles Canada

UNLESS OTHERWISE SPECIFIED:

DIMENSIONS ARE IN **INCHES**
TOLERANCES:
FRACTIONAL: 1/32"
ANGULAR: MACH 0.1 BEND 0.1
TWO PLACE DECIMAL 0.005
THREE PLACE DECIMAL 0.001

INTERPRET GEOMETRIC TOLERANCING PER: **ASME Y14.5-2009**

MATERIAL: Stainless Steel

FINISH: As Formed

DO NOT SCALE DRAWING

	NAME	DATE
DRAWN	DJP	2016-09-15
DESIGN	DJP	2016-09-12

COMMENTS:

PROJECT (GROUP): WOSS KIOSK (GSC Pacific)

TITLE: Prop rod tab LH

SIZE: B | DWG. NO.: MTK 103L | REV: A-1.0

SCALE: 1:1 | SHEET 1 OF 1

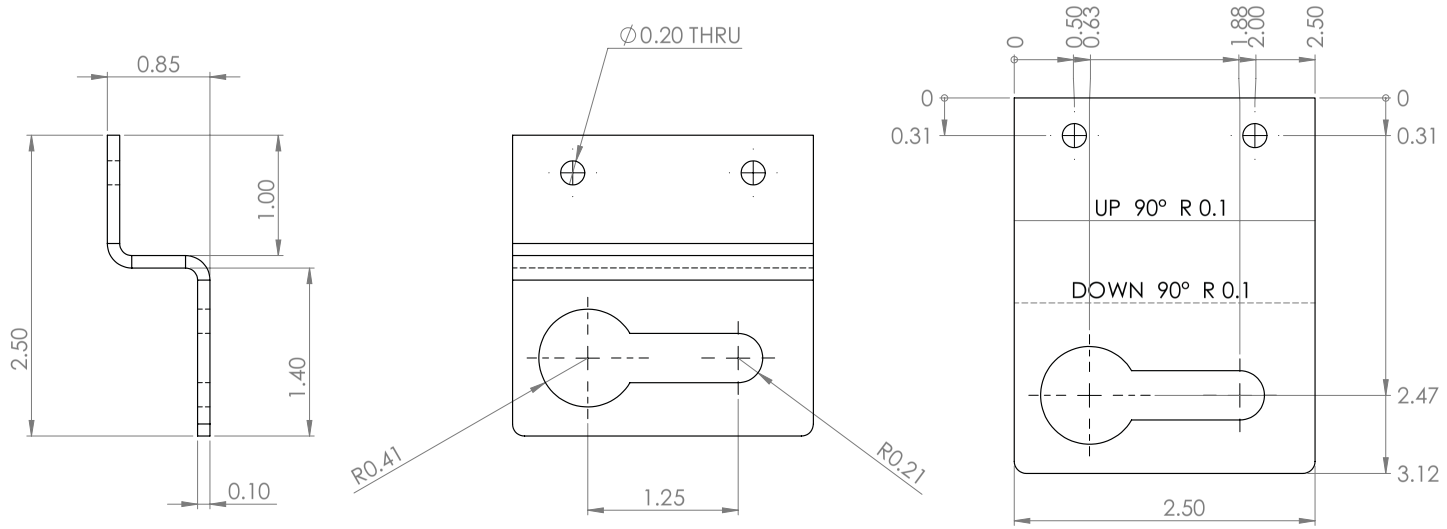

PROPRIETARY AND CONFIDENTIAL

THE INFORMATION CONTAINED IN THIS DRAWING IS THE SOLE PROPERTY OF the **Geological Survey of Canada (G.S.C)** ANY REPRODUCTION IN PART OR AS A WHOLE WITHOUT THE WRITTEN PERMISSION OF **G.S.C.** IS PROHIBITED.

GSC PACIFIC

Canada

UNLESS OTHERWISE SPECIFIED:

DIMENSIONS ARE IN **INCHES**
TOLERANCES:
FRACTIONAL: 1/32"
ANGULAR: MACH 0.1 BEND 0.1
TWO PLACE DECIMAL 0.005
THREE PLACE DECIMAL 0.001

INTERPRET GEOMETRIC TOLERANCING PER: **ASME Y14.5-2009**

MATERIAL: Stainless Steel

FINISH: As Formed

DO NOT SCALE DRAWING

	NAME	DATE
DRAWN	DJP	2016-03-13
DESIGN	DJP	

COMMENTS:

PROJECT (GROUP): (CHIS) Mountain Top Kiosk

TITLE: Prop rod tab RH

SIZE	DWG. NO.	REV
B	MTK103R	A-2.0

SCALE: 1:1 | SHEET 1 OF 1

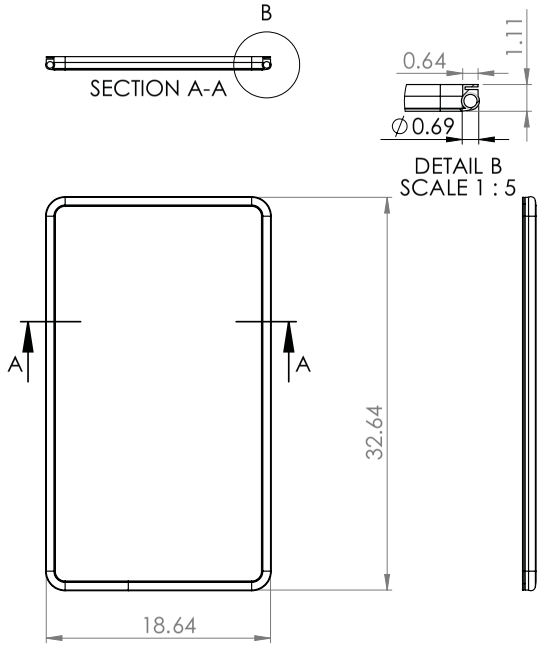

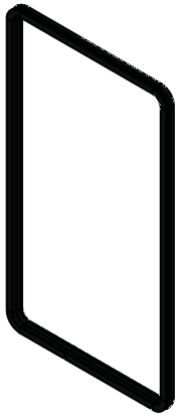

McMaster-Carr 12335A73

PROPRIETARY AND CONFIDENTIAL

THE INFORMATION CONTAINED IN THIS DRAWING IS THE SOLE PROPERTY OF the **Geological Survey of Canada (G.S.C)** ANY REPRODUCTION IN PART OR AS A WHOLE WITHOUT THE WRITTEN PERMISSION OF **G.S.C.** IS PROHIBITED.

GSC PACIFIC

Natural Resources Canada / Ressources naturelles Canada

UNLESS OTHERWISE SPECIFIED:

DIMENSIONS ARE IN **INCHES**
TOLERANCES:
FRACTIONAL: 1/32"
ANGULAR: MACH 0.1 BEND 0.1
TWO PLACE DECIMAL 0.005
THREE PLACE DECIMAL 0.001

INTERPRET GEOMETRIC TOLERANCING PER: **ASME Y14.5-2009**

MATERIAL: EPDM 60 Durometer

FINISH

DO NOT SCALE DRAWING

	NAME	DATE
DRAWN	DJP	2016-09-15
DESIGN	DJP	2016-09-12

COMMENTS:

PROJECT (GROUP): (CHIS) Mountain Top Kiosk

TITLE: Door Bulb Seal

SIZE: B | DWG. NO.: MTK 179 | REV: A-1.0

SCALE: 1:10 | SHEET 1 OF 1

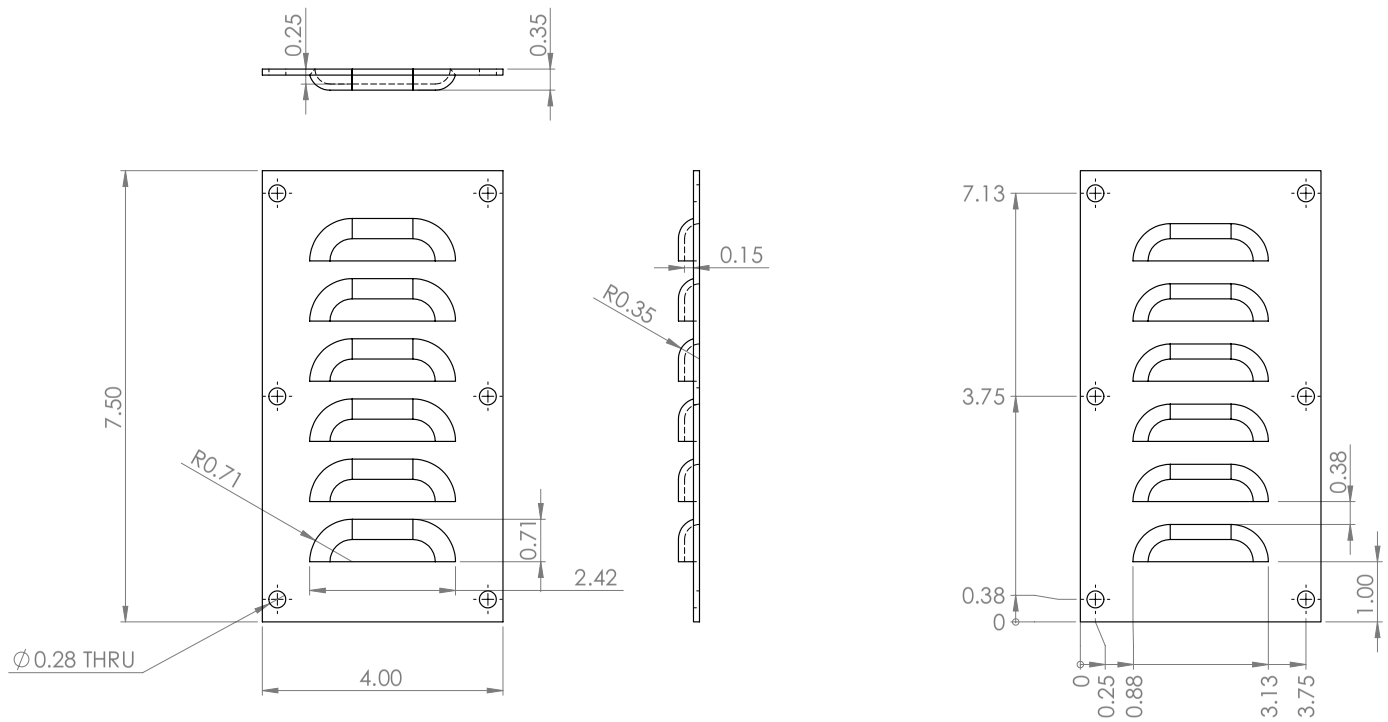

PROPRIETARY AND CONFIDENTIAL

THE INFORMATION CONTAINED IN THIS DRAWING IS THE SOLE PROPERTY OF the **Geological Survey of Canada** (**G.S.C**) ANY REPRODUCTION IN PART OR AS A WHOLE WITHOUT THE WRITTEN PERMISSION OF **G.S.C.** IS PROHIBITED.

GSC PACIFIC

UNLESS OTHERWISE SPECIFIED:

DIMENSIONS ARE IN **INCHES**
TOLERANCES:
FRACTIONAL: 1/32"
ANGULAR: MACH 0.1 BEND 0.1
TWO PLACE DECIMAL 0.005
THREE PLACE DECIMAL 0.001

INTERPRET GEOMETRIC TOLERANCING PER: **ASME Y14.5-2009**

MATERIAL
#10 ga 5052-H32

FINISH
As Formed

DO NOT SCALE DRAWING

	NAME	DATE
DRAWN	HOV	
DESIGN	HOV	

COMMENTS:

PROJECT (GROUP)
(CHIS) Mountaintop Kiosk

TITLE:
Louver Cover plate

SIZE	DWG. NO.	REV
B	MTK 19206	A-1.0

SCALE: 1:2 | SHEET 1 OF 1

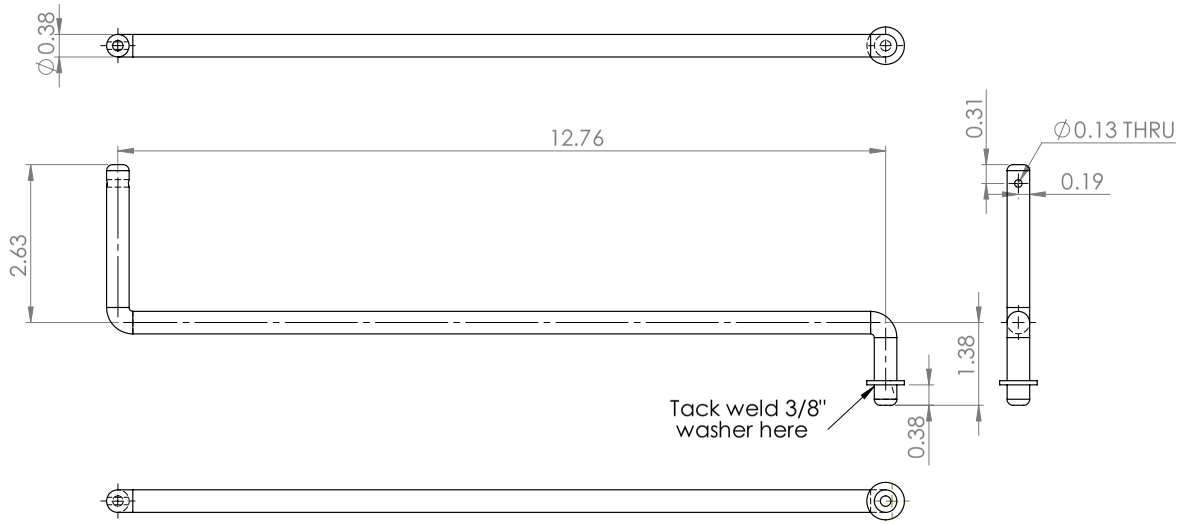

PROPRIETARY AND CONFIDENTIAL

THE INFORMATION CONTAINED IN THIS DRAWING IS THE SOLE PROPERTY OF the **Geological Survey of Canada (G.S.C)** ANY REPRODUCTION IN PART OR AS A WHOLE WITHOUT THE WRITTEN PERMISSION OF **G.S.C.** IS PROHIBITED.

GSC PACIFIC

UNLESS OTHERWISE SPECIFIED:

DIMENSIONS ARE IN **INCHES**
TOLERANCES:
FRACTIONAL: 1/32"
ANGULAR: MACH 0.1 BEND 0.1
TWO PLACE DECIMAL 0.005
THREE PLACE DECIMAL 0.001

INTERPRET GEOMETRIC TOLERANCING PER: **ASME Y14.5-2009**

MATERIAL
Stainless Steel

FINISH
Architectural 4

DO NOT SCALE DRAWING

	NAME	DATE
DRAWN	DJP	2016-03-13
DESIGN	DJP	2016-03-03

COMMENTS:

PROJECT (GROUP)
(CHIS) Mountain Top Kiosk

TITLE:
Prop Rod

SIZE **B** | DWG. NO. MTK 157 | REV A-1.0

SCALE: 1:2 | SHEET 1 OF 1

ITEM NO.	PART NUMBER	DESCRIPTION	Supplier	QTY.
1	110A69	26" Drawer Slide 110A69	© 2013 McMaster-Carr Supply Company	2
2	MTK181	Back Wall Panel Lower		1
3	MTK179	PT Side panel		2
4	MTK178	Back Wall Panel Upper		1
5	MTK180	PT Sliding Shelf		1
6	MTK 19180	PT Shelf		1

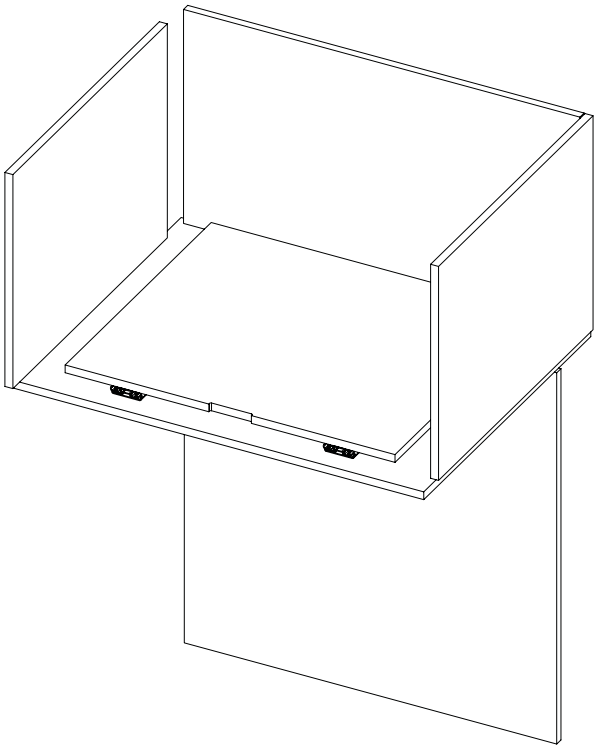

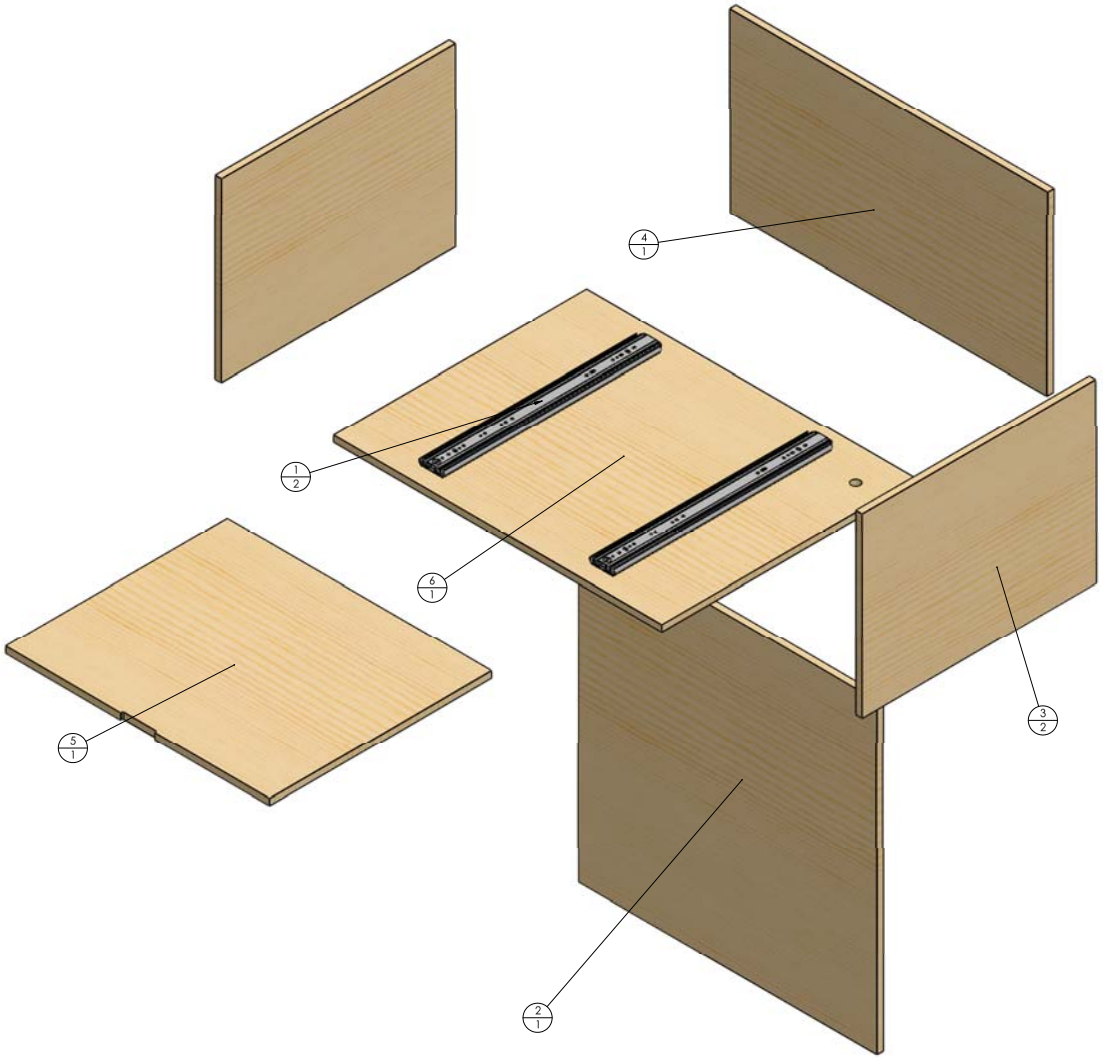

PROPRIETARY AND CONFIDENTIAL
THE INFORMATION CONTAINED IN THIS DRAWING IS THE SOLE PROPERTY OF the **Geological Survey of Canada (G.S.C)**. ANY REPRODUCTION IN PART OR AS A WHOLE WITHOUT THE WRITTEN PERMISSION OF THE **G.S.C.** IS PROHIBITED.

UNLESS OTHERWISE SPECIFIED:
DIMENSIONS ARE IN **INCHES**
TOLERANCES:
FRACTIONAL ±1/32
ANGULAR: MACH ±1 BEND ±1
TWO PLACE DECIMAL ±0.005
THREE PLACE DECIMAL ±0.001
INTERPRET GEOMETRIC TOLERANCING PER **ASME Y14.5-2009**
MATERIAL
FINISH As Formed
DO NOT SCALE DRAWING

	NAME	DATE
DRAWN	DJP	2016-03-10
DESIGN	XXX	2016-03-01

COMMENTS

(CHIS) Mountain Top Kiosk

TITLE: Instrumentation Shelf Assembly

SIZE **D** | DWG. NO. MTK185 | REV A-2.0

SCALE: 1:5 | SHEET 1 OF 2

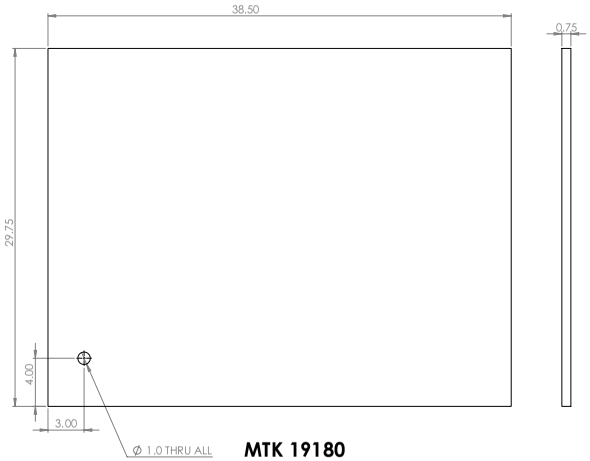

MTK 19180

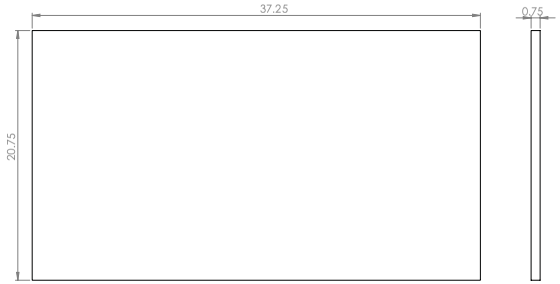

MTK178

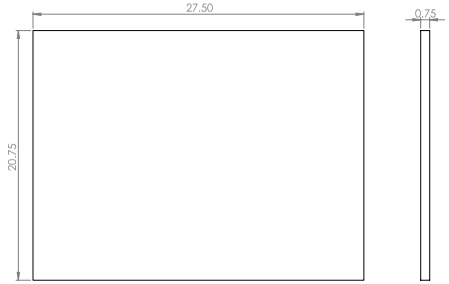

MTK179

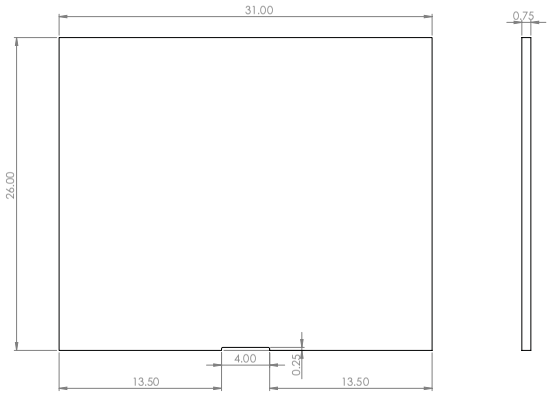

MTK 180

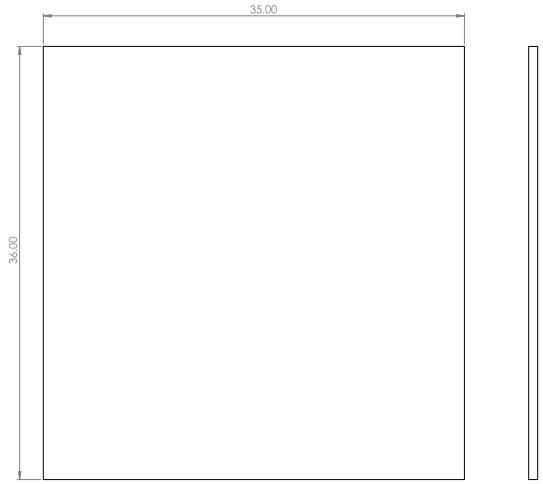

MTK 181

PLY-WOOD CUT DIMENSIONS

Use good one side pressure treated fir plywood

PROPRIETARY AND CONFIDENTIAL
THE INFORMATION CONTAINED IN THIS DRAWING IS THE SOLE PROPERTY OF the **Geological Survey of Canada (G.S.C)**. ANY REPRODUCTION IN PART OR AS A WHOLE WITHOUT THE WRITTEN PERMISSION OF THE **G.S.C.** IS PROHIBITED.

UNLESS OTHERWISE SPECIFIED:
DIMENSIONS ARE IN **INCHES**
TOLERANCES:
FRACTIONAL ±1/32
ANGULAR: MACH ±1 BEND ±1
TWO PLACE DECIMAL ±0.005
THREE PLACE DECIMAL ±0.001
INTERPRET GEOMETRIC TOLERANCING PER **ASME Y14.5-2009**
MATERIAL
FINISH: As Formed
DO NOT SCALE DRAWING

	NAME	DATE
DRAWN	DJP	2016-03-13
DESIGN	XXX	2016-03-01

COMMENTS

(CHIS) Mountain Top Kiosk

TITLE: Instrumentation Shelf Assembly

SIZE **D** | DWG. NO. MTK185 | REV A-2.0

SCALE: 1:5 | SHEET 2 OF 2

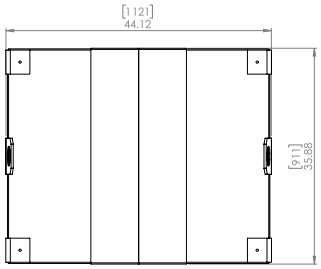

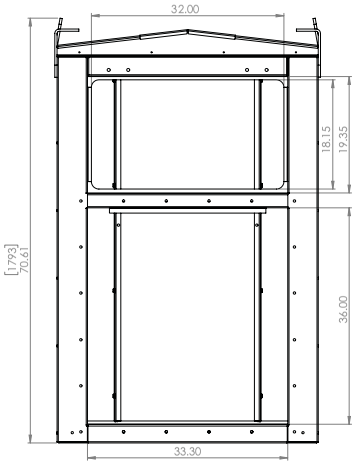

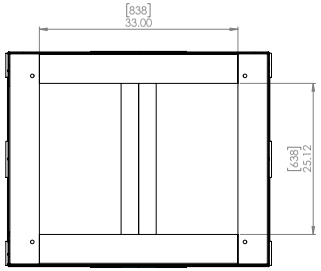

All non welded Seams and Joints to be bedded and sealed with outdoor usage silicone sealant

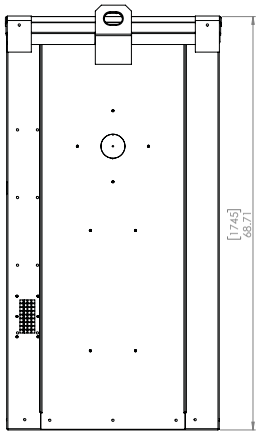

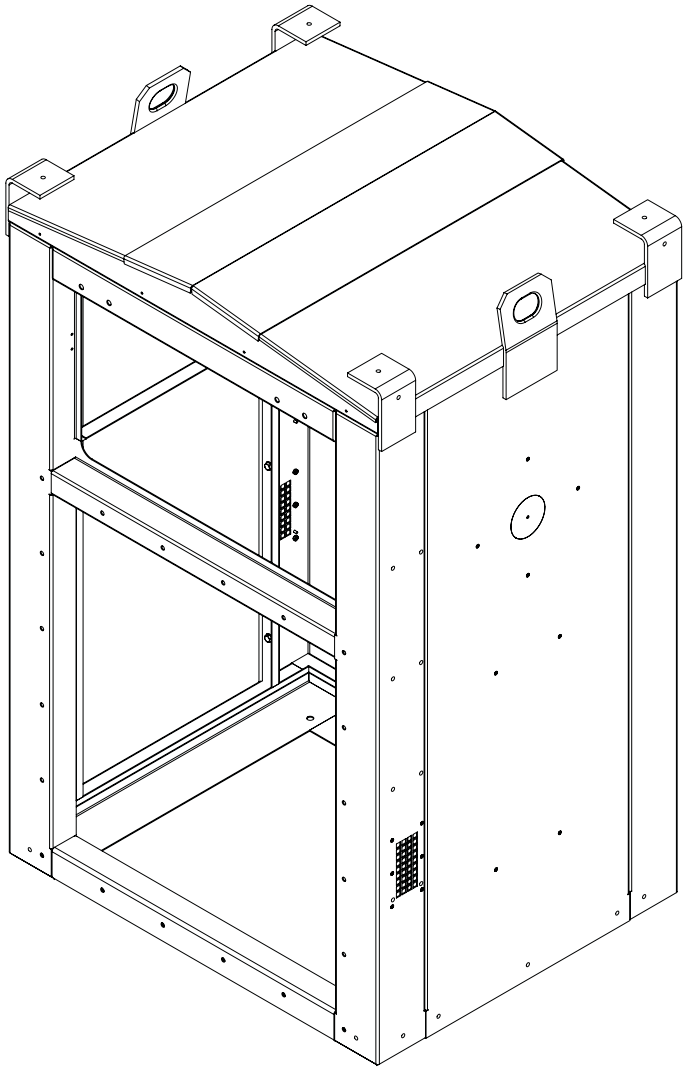

PROPRIETARY AND CONFIDENTIAL
THE INFORMATION CONTAINED IN THIS DRAWING IS THE SOLE PROPERTY OF the **Geological Survey of Canada (G.S.C)**. ANY REPRODUCTION IN PART OR AS A WHOLE WITHOUT THE WRITTEN PERMISSION OF THE **G.S.C.** IS PROHIBITED.

UNLESS OTHERWISE SPECIFIED:
DIMENSIONS ARE IN **INCHES**
TOLERANCES:
FRACTIONAL ±1/32
ANGULAR: MACH ±1 BEND ±1
TWO PLACE DECIMAL ±0.005
THREE PLACE DECIMAL ±0.001
INTERPRET GEOMETRIC TOLERANCING PER **ASME Y14.5-2009**
MATERIAL
FINISH
DO NOT SCALE DRAWING

COMMENTS

	NAME	DATE
DRAWN	DJP	XXX
DESIGN	XXX	XXX

(CHIS) Mountaintop Kiosk

TITLE:
Kiosk Main Frame Assembly

SIZE **D** | DWG. NO. MTK201 | REV A-2.0

SCALE: 1:10 | SHEET 1 OF 3

ITEM NO.	PART NUMBER	DESCRIPTION	QTY.	Supplier
1	MTK 19184	Modified Lintel	1	
2	MTK161	Front sill spacer	1	
3	93190A622	3/8-16 X 3/4 S.S. HHC	32	© 2014 McMaster-Carr Supply Company
4	90107A127	3/8 316 SS Flat Washer	64	© 2014 McMaster-Carr Supply Company
5	90715A145	3/8-16 S.S. Nylock nut	32	© 2015 McMaster-Carr Supply Company
6	96439A610	1/4"-20 SS PRESS-IN NUT FOR SHEET MTL	24	© 2015 McMaster-Carr Supply Company
7	97550A320	3/16 Dia Blind Rivet	35	
8	MTK 19183	LH Door Jamb	1	
9	MTK104	Combined Lintel and Sill	1	
10	MTK 19170	RH Door Jamb	1	
11	MTK 19172C	PANEL, CENTER WALL RH w/ cutout	1	
12	MTK 19172	PANEL, CENTER WALL	2	
13	MTK 19185F	Truss/Gable, Roof Kiosk, FRONT	1	
14	MTK 19185R	Truss/Gable, Roof Kiosk, REAR	1	
15	MTK 19186	Panel, Roof Kiosk	2	
16	MTK 19187	Cap, Roof, Kiosk	1	
17	MTK 19189	Lifting Eye, Weld On	2	
18	MTK 19208	Tab, Solar Panel MNTNG Kiosk	4	
19	MTK 19196	Support, Angle Shelf AL	2	
20	MTK 19207-01	CHANNEL, "Z", AL, Back	1	
21	MTK 19188RR	Rear Right Corner Pillar	1	
22	MTK 19188RL	Rear Left Corner Pillar	1	
23	MTK 19169	Frame, Bottom Sill Assembly, KIOSK	1	
	MTK 19169-24	Sill, Bottom R Side	1	
	MTK 19169-22	Sill, Bottom L Side	1	
	MTK 19169-23	Sill, Bottom Back Side	1	
	MTK 19169-21	Sill, Bottom Door	1	

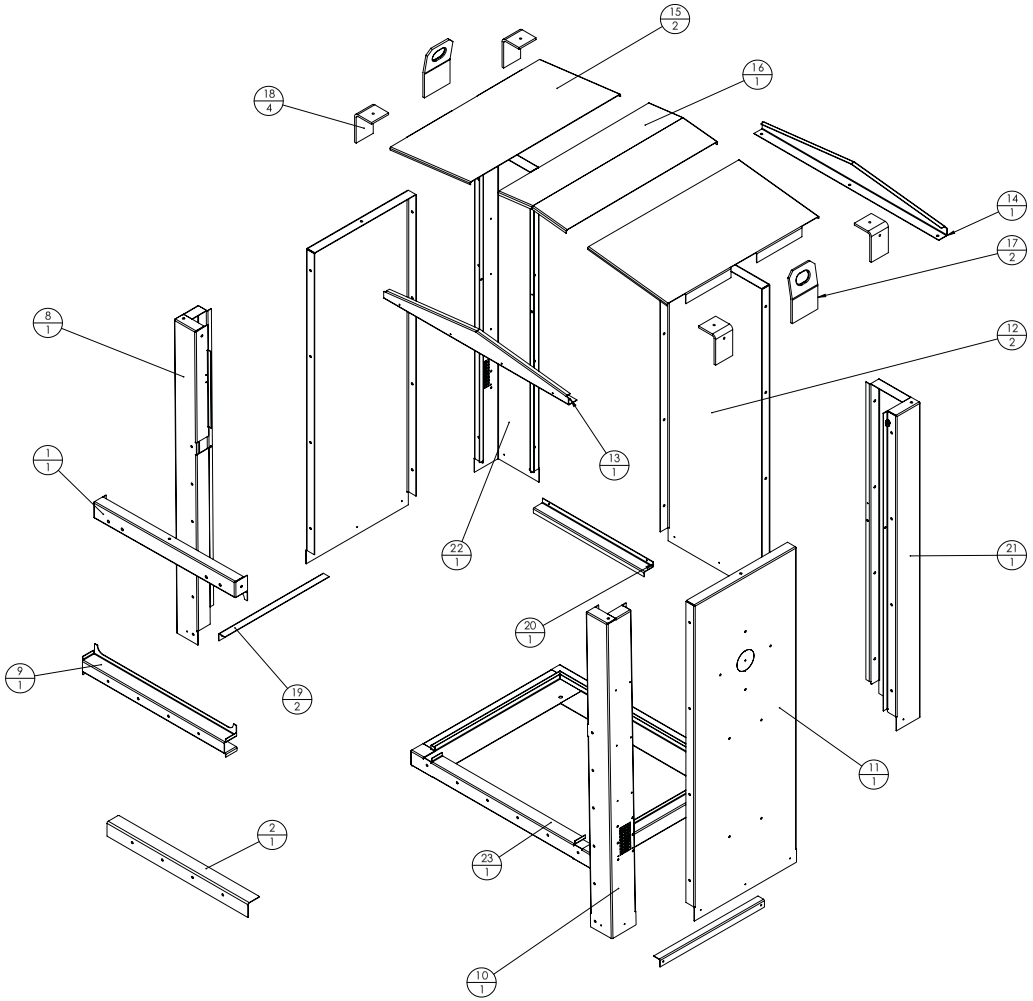

PROPRIETARY AND CONFIDENTIAL
THE INFORMATION CONTAINED IN THIS DRAWING IS THE SOLE PROPERTY OF the **Geological Survey of Canada (G.S.C)**. ANY REPRODUCTION IN PART OR AS A WHOLE WITHOUT THE WRITTEN PERMISSION OF THE **G.S.C.** IS PROHIBITED.

UNLESS OTHERWISE SPECIFIED:
DIMENSIONS ARE IN **INCHES**
TOLERANCES:
FRACTIONAL ± 1/32
ANGULAR: MACH ± 1 BEND ± 1
TWO PLACE DECIMAL ± 0.005
THREE PLACE DECIMAL ± 0.001
INTERPRET GEOMETRIC TOLERANCING PER **ASME Y14.5-2009**
MATERIAL
FINISH
DO NOT SCALE DRAWING

	NAME	DATE
DRAWN	DJP	XXX
DESIGN	XXX	XXX

COMMENTS

(CHIS) Mountaintop Kiosk

TITLE: Kiosk Main Frame Assembly

SIZE **D** | DWG. NO. MTK201 | REV A-2.0

SCALE: 1:10 | SHEET 2 OF 3

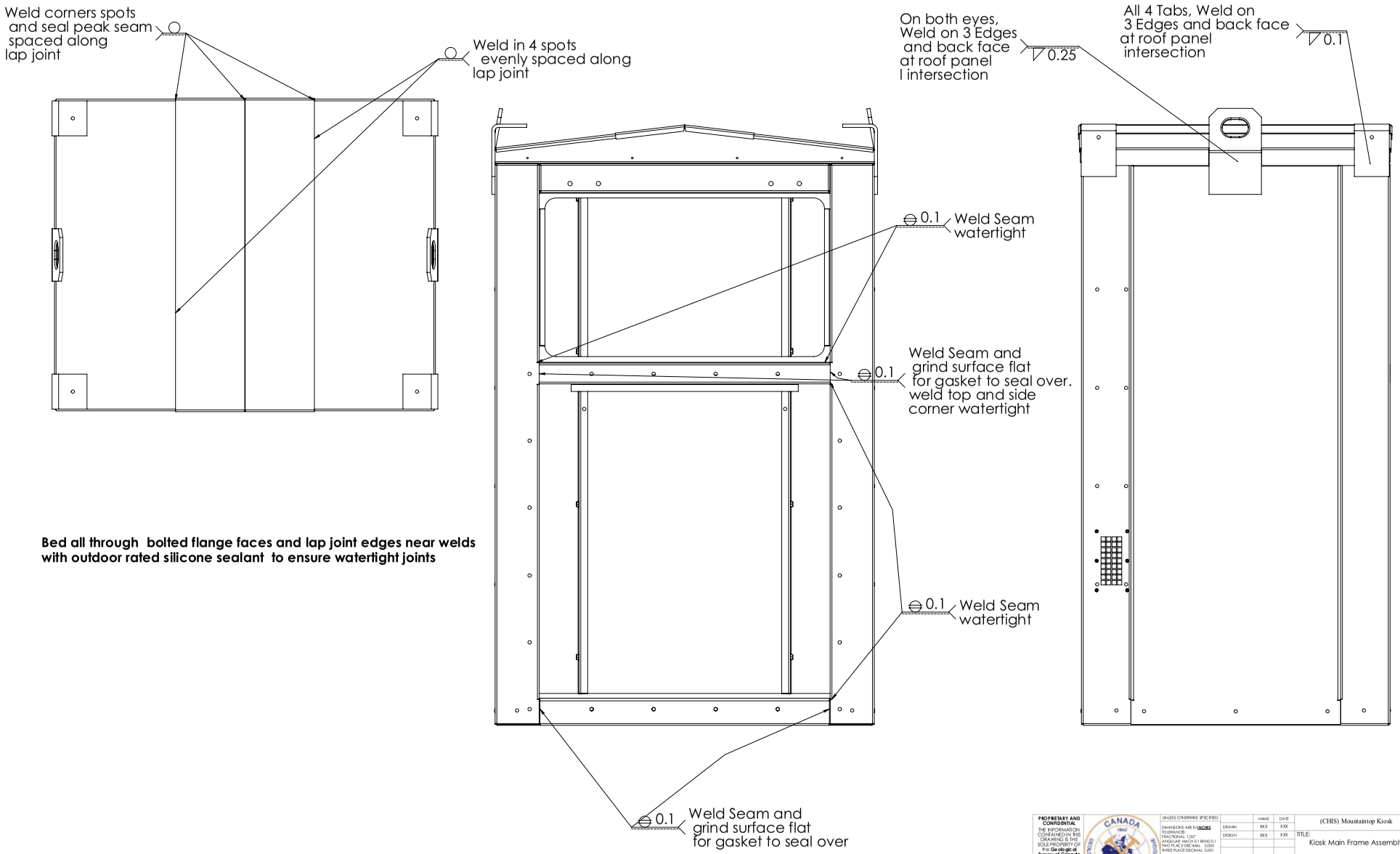

Bed all through bolted flange faces and lap joint edges near welds with outdoor rated silicone sealant to ensure watertight joints

PROPRIETARY AND CONFIDENTIAL
THE INFORMATION CONTAINED IN THIS DRAWING IS THE SOLE PROPERTY OF the **Geological Survey of Canada (G.S.C)**. ANY REPRODUCTION IN PART OR AS A WHOLE WITHOUT THE WRITTEN PERMISSION OF THE **G.S.C.** IS PROHIBITED.

UNLESS OTHERWISE SPECIFIED:
DIMENSIONS ARE IN **INCHES**
TOLERANCES:
FRACTIONAL ±1/32
ANGULAR: MACH ±1 BEND ±1
TWO PLACE DECIMAL ±0.005
THREE PLACE DECIMAL ±0.001
INTERPRET GEOMETRIC TOLERANCING PER **ASME Y14.5-2009**
MATERIAL
FINISH
DO NOT SCALE DRAWING

	NAME	DATE
DRAWN	XXX	XXX
DESIGN	XXX	XXX

COMMENTS

(CHIS) Mountaintop Kiosk

TITLE: Kiosk Main Frame Assembly

SIZE	DWG. NO.	REV
D	MTK201	A-1.0

SCALE: 1:5 | SHEET 3 OF 3

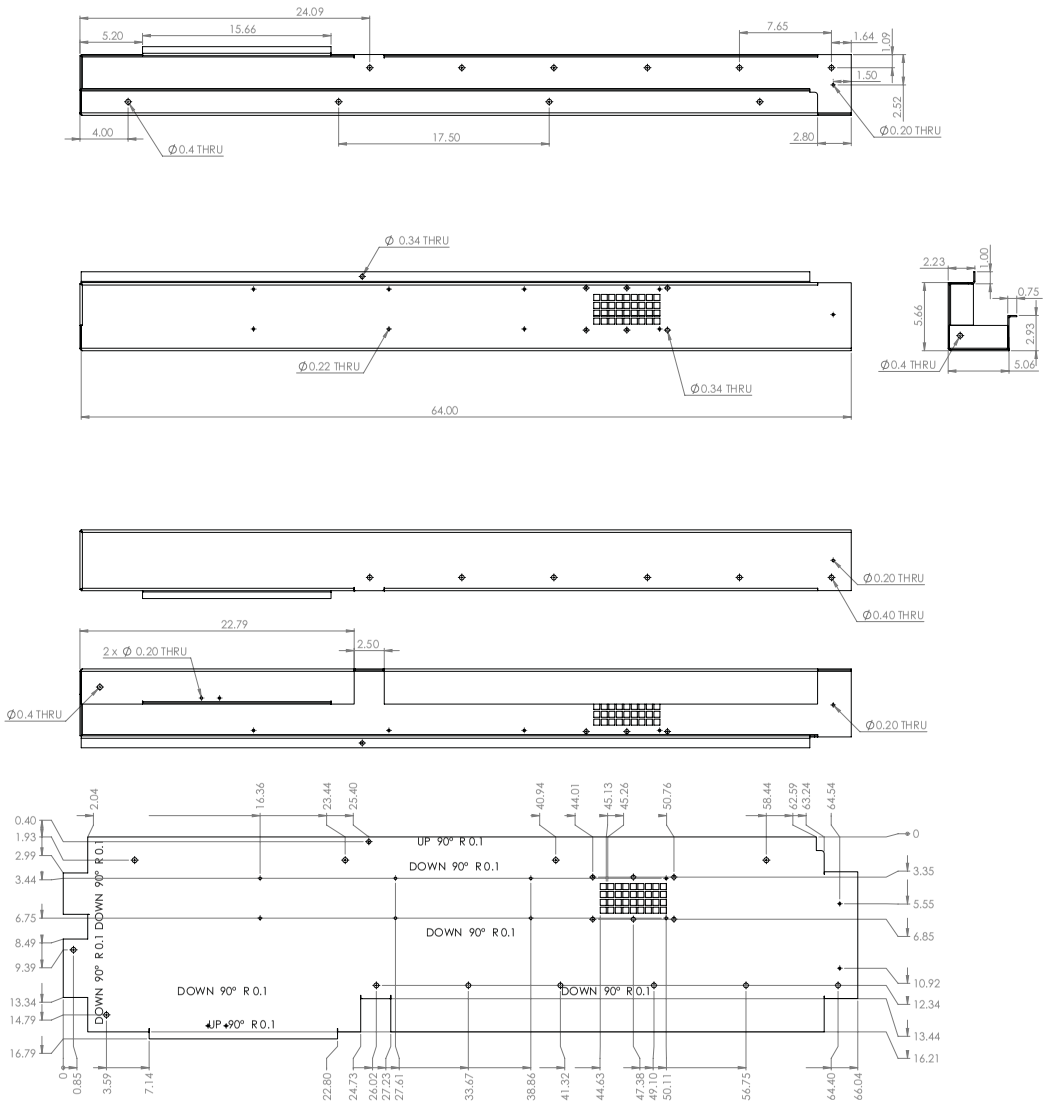

PROPRIETARY AND CONFIDENTIAL
THE INFORMATION CONTAINED IN THIS DRAWING IS THE SOLE PROPERTY OF the **Geological Survey of Canada (G.S.C)**. ANY REPRODUCTION IN PART OR AS A WHOLE WITHOUT THE WRITTEN PERMISSION OF THE **G.S.C.** IS PROHIBITED.

UNLESS OTHERWISE SPECIFIED:
DIMENSIONS ARE IN **INCHES**
TOLERANCES:
FRACTIONAL ±1/32
ANGULAR: MACH ±1 BEND ±1
TWO PLACE DECIMAL ±0.005
THREE PLACE DECIMAL ±0.001
INTERPRET GEOMETRIC TOLERANCING PER: **ASME Y14.5-2009**
MATERIAL
#10 ga 5052-H32
FINISH
As Formed
DO NOT SCALE DRAWING

COMMENTS

	NAME	DATE
DRAWN	DJP	2016-03-10
DESIGN	XXX	2016-03-01

(CHIS) Mountain Top Kiosk

TITLE:
RH Door Jamb

SIZE	DWG. NO.	REV
D	MTK 19170	A-2.0

SCALE: 1:5 SHEET 1 OF 1

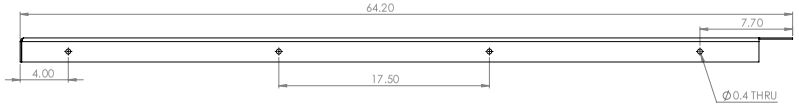

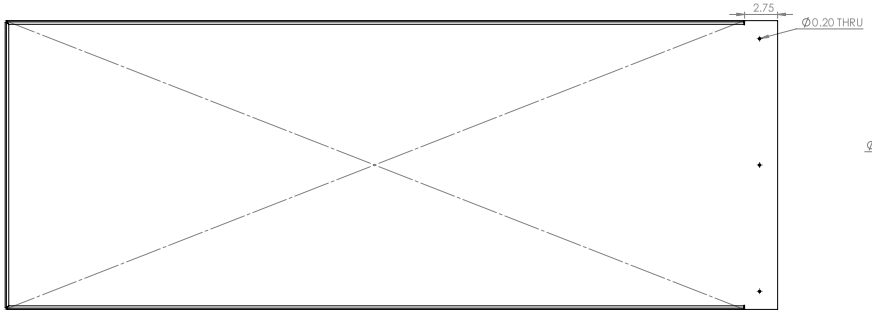

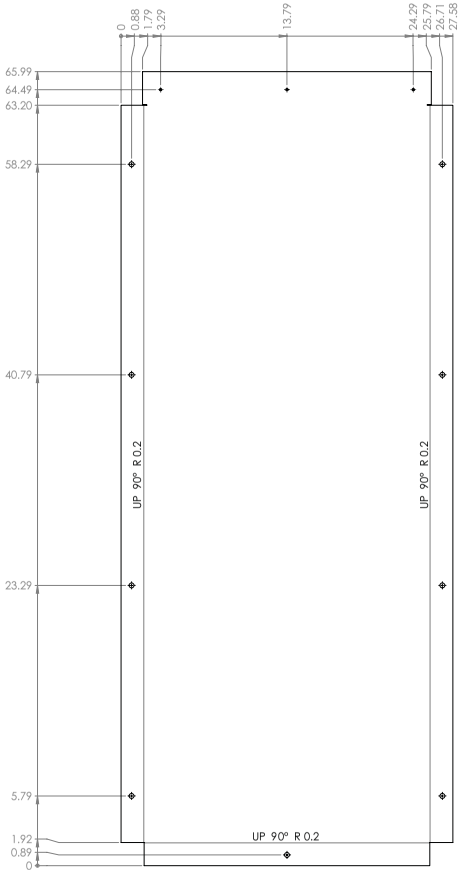

PROPRIETARY AND CONFIDENTIAL
THE INFORMATION CONTAINED IN THIS DRAWING IS THE SOLE PROPERTY OF the **Geological Survey of Canada (G.S.C)**. ANY REPRODUCTION IN PART OR AS A WHOLE WITHOUT THE WRITTEN PERMISSION OF THE **G.S.C.** IS PROHIBITED.

UNLESS OTHERWISE SPECIFIED:
DIMENSIONS ARE IN **INCHES**
TOLERANCES:
FRACTIONAL ±1/32
ANGULAR: MACH ±1 BEND ±1
TWO PLACE DECIMAL ±0.005
THREE PLACE DECIMAL ±0.001
INTERPRET GEOMETRIC TOLERANCING PER: **ASME Y14.5-2009**
MATERIAL
#10 ga 5052-H32
FINISH
As Formed
DO NOT SCALE DRAWING

	NAME	DATE
DRAWN	DJP	
DESIGN	HOV	

COMMENTS

(CHIS) Mountaintop Kiosk

TITLE:
PANEL, CENTER WALL

SIZE	DWG. NO.	REV
D	MTK 19172	A-2.0

SCALE: 1:5 SHEET 1 OF 1

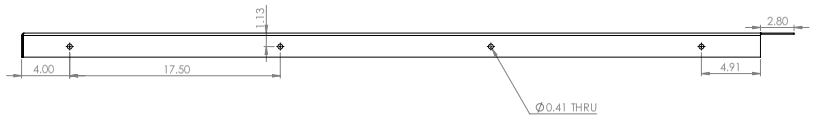

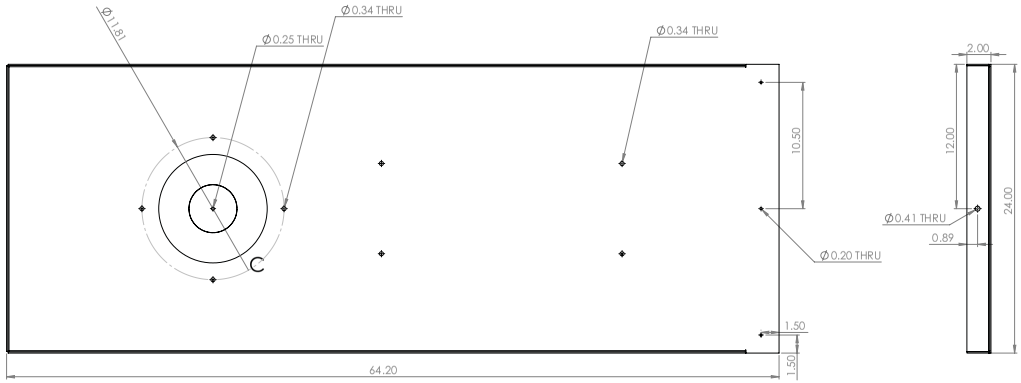

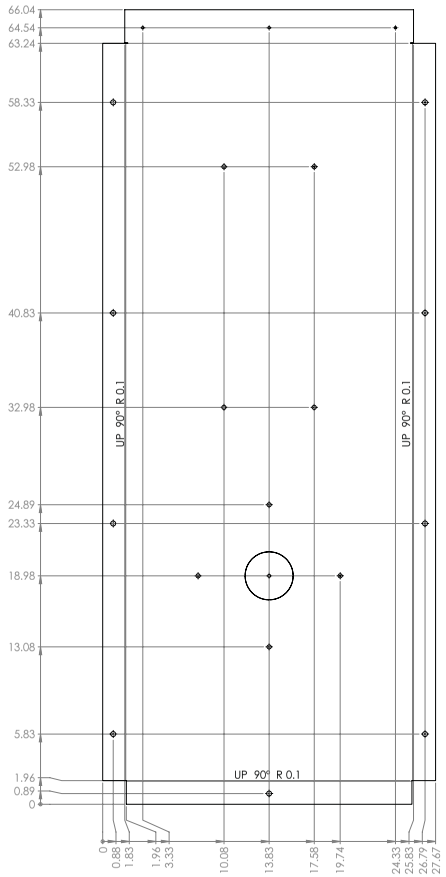

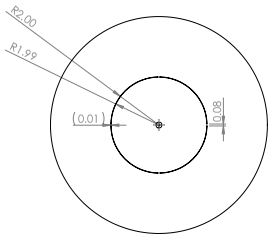

Knock Out Detail

DETAIL C

SCALE 2 : 5

Only one Panel like this per Kiosk

PROPRIETARY AND CONFIDENTIAL
THE INFORMATION CONTAINED IN THIS DRAWING IS THE SOLE PROPERTY OF the **Geological Survey of Canada (G.S.C)**. ANY REPRODUCTION IN PART OR AS A WHOLE WITHOUT THE WRITTEN PERMISSION OF THE **G.S.C.** IS PROHIBITED.

UNLESS OTHERWISE SPECIFIED:
DIMENSIONS ARE IN **INCHES**
TOLERANCES:
FRACTIONAL ±1/32
ANGULAR: MACH ±1 BEND ±1
TWO PLACE DECIMAL 0.005
THREE PLACE DECIMAL 0.001
INTERPRET GEOMETRIC TOLERANCING PER: **ASME Y14.5-2009**
MATERIAL
#10 ga S0 52-H52
FINISH
As Formed
DO NOT SCALE DRAWING

	NAME	DATE
DRAWN	DJP	XXX
DESIGN	HOV	XXX

COMMENTS

(CHIS) Mountaintop Kiosk

TITLE:
PANEL, CENTER WALL RH w/ cutout

SIZE	DWG. NO.	REV
D	MTK 19172C	A-1.0

SCALE: 1:5 SHEET 1 OF 1

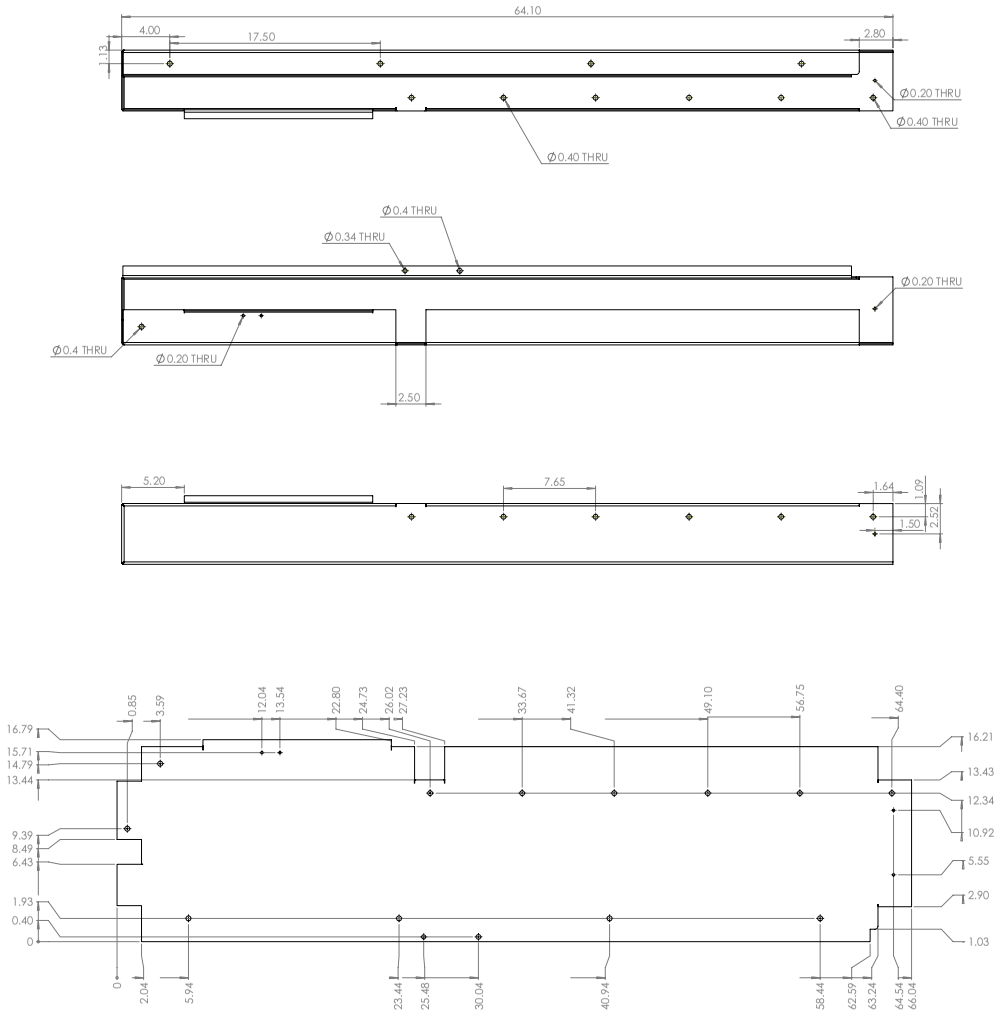

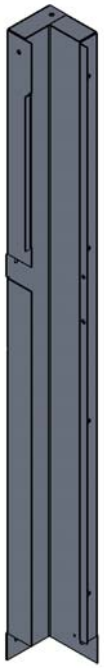

PROPRIETARY AND CONFIDENTIAL
THE INFORMATION CONTAINED IN THIS DRAWING IS THE SOLE PROPERTY OF the **Geological Survey of Canada (G.S.C)**. ANY REPRODUCTION IN PART OR AS A WHOLE WITHOUT THE WRITTEN PERMISSION OF THE **G.S.C.** IS PROHIBITED.

UNLESS OTHERWISE SPECIFIED:
DIMENSIONS ARE IN **INCHES**
TOLERANCES:
FRACTIONAL ±1/32
ANGULAR: MACH ±1 BEND ±1
TWO PLACE DECIMAL ±0.005
THREE PLACE DECIMAL ±0.001
INTERPRET GEOMETRIC TOLERANCING PER: **ASME Y14.5-2009**
MATERIAL
#10 ga 5052-H32
FINISH
As Formed
DO NOT SCALE DRAWING

	NAME	DATE
DRAWN	DJP	2016-03-10
DESIGN	XXX	2016-03-02

COMMENTS

(CHIS) Mountain Top Kiosk

TITLE: LH Door Jamb

SIZE	DWG. NO.	REV
D	MTK 19183	A-2.0

SCALE: 1:5 SHEET 1 OF 1

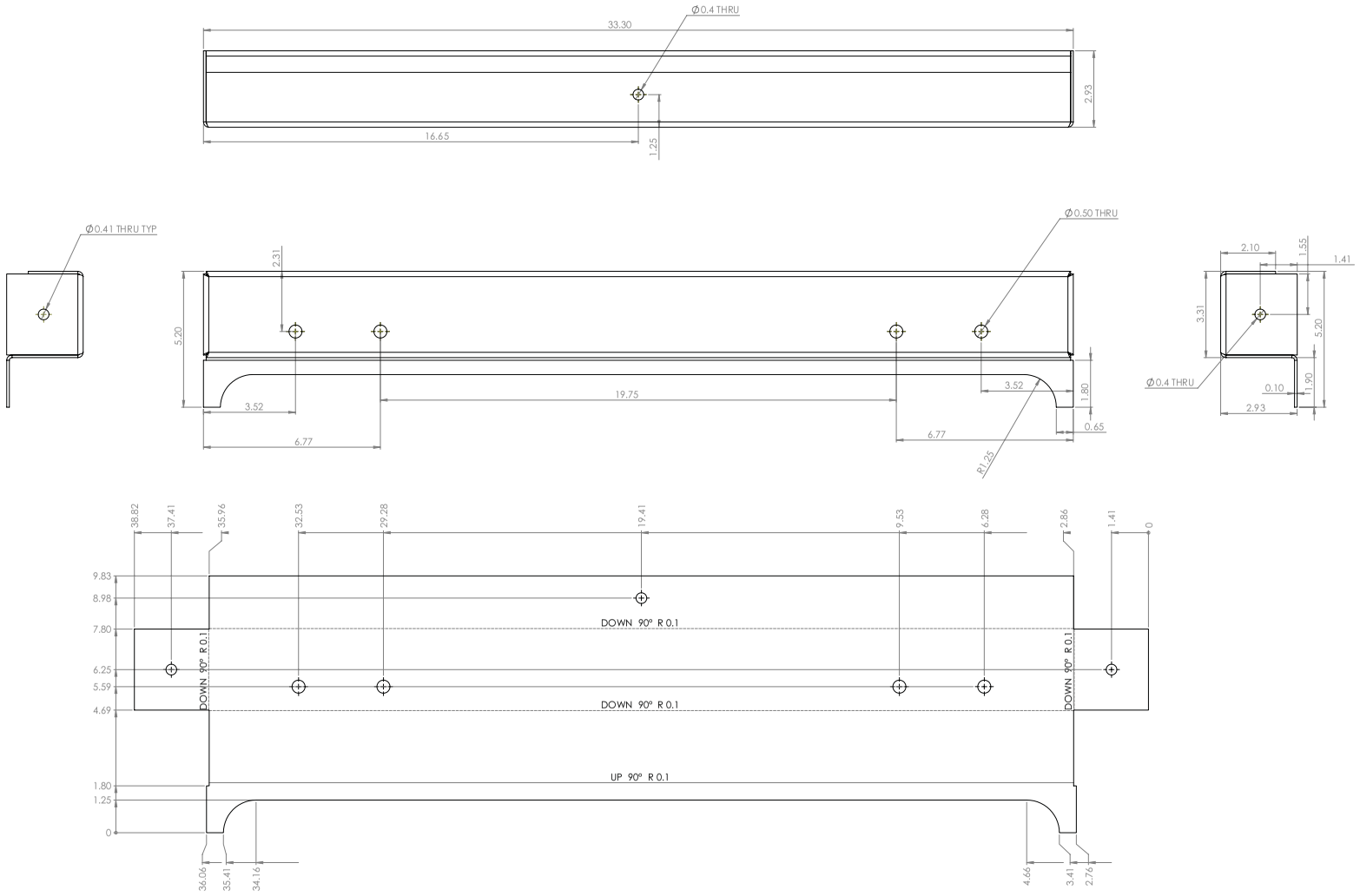

PROPRIETARY AND CONFIDENTIAL
THE INFORMATION CONTAINED IN THIS DRAWING IS THE SOLE PROPERTY OF the **Geological Survey of Canada (G.S.C)**. ANY REPRODUCTION IN PART OR AS A WHOLE WITHOUT THE WRITTEN PERMISSION OF THE **G.S.C.** IS PROHIBITED.

UNLESS OTHERWISE SPECIFIED:
DIMENSIONS ARE IN **INCHES**
TOLERANCES:
FRACTIONAL ±1/32
ANGULAR: MACH ±1 BEND ±1
TWO PLACE DECIMAL ±0.03
THREE PLACE DECIMAL ±0.01
INTERPRET GEOMETRIC TOLERANCING PER: **ASME Y14.5-2009**
MATERIAL
#10 ga S0S2-H32
FINISH
As Formed
DO NOT SCALE DRAWING

	NAME	DATE
DRAWN	DJP	2016-03-15
DESIGN	XXX	XXX

COMMENTS

(CHIS) Mountaintop Kiosk

TITLE:
Modified Lintel

SIZE	DWG. NO.	REV
D	MTK 19184	A-1.0

SCALE: 1:2 SHEET 1 OF 1

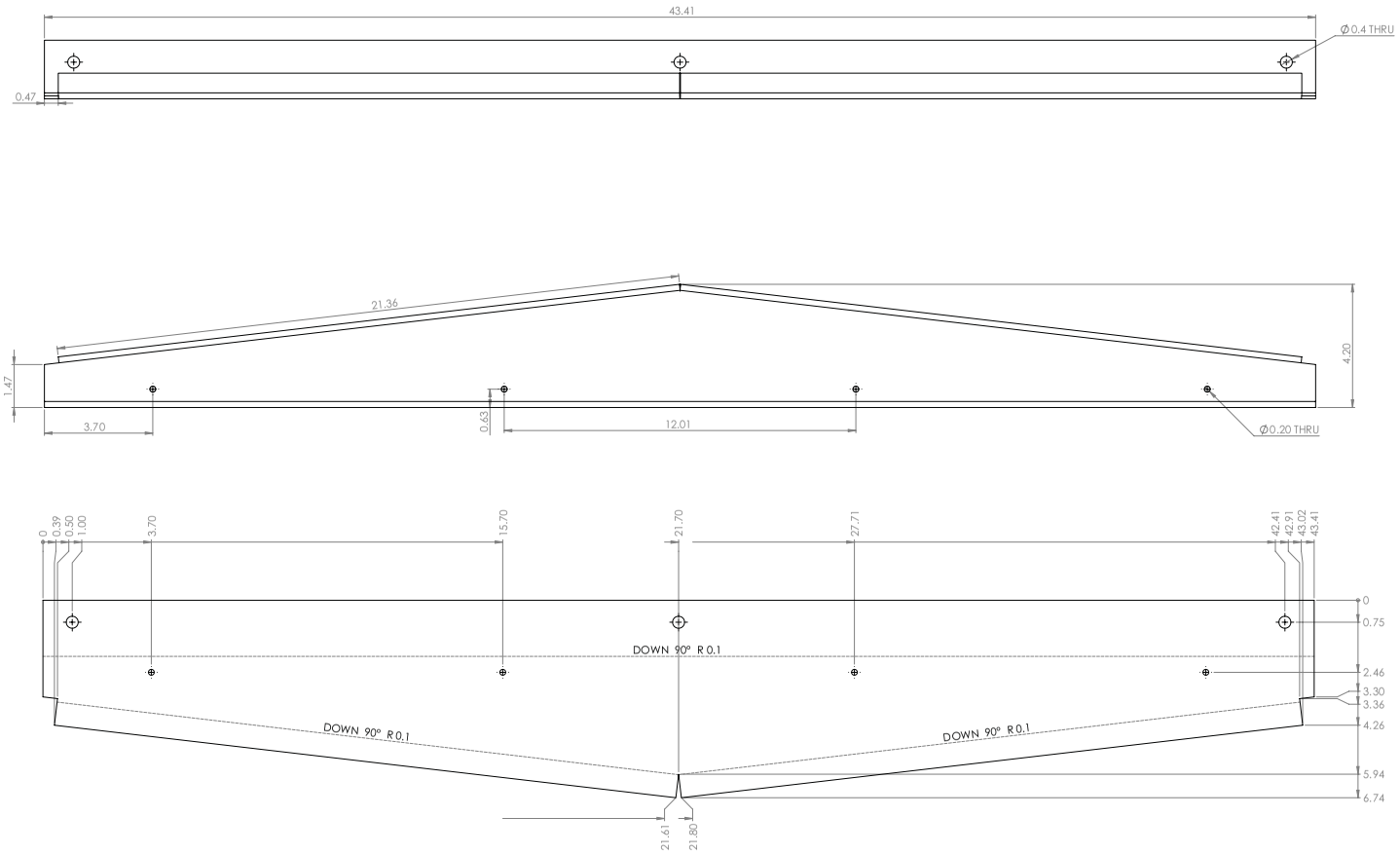

PROPRIETARY AND CONFIDENTIAL
THE INFORMATION CONTAINED IN THIS DRAWING IS THE SOLE PROPERTY OF the **Geological Survey of Canada (G.S.C)**. ANY REPRODUCTION IN PART OR AS A WHOLE WITHOUT THE WRITTEN PERMISSION OF THE **G.S.C.** IS PROHIBITED.

UNLESS OTHERWISE SPECIFIED:
DIMENSIONS ARE IN **INCHES**
TOLERANCES:
FRACTIONAL ±1/32"
ANGULAR: MACH ±1 BEND ±1
TWO PLACE DECIMAL ±0.005
THREE PLACE DECIMAL ±0.001
INTERPRET GEOMETRIC TOLERANCING PER: **ASME Y14.5-2009**
MATERIAL
10 ga 5052-H32
FINISH
As Formed
DO NOT SCALE DRAWING

	NAME	DATE
DRAWN	DJP	XXX
DESIGN	HOV	XXX

COMMENTS

(CHIS) Mountaintop Kiosk

TITLE:
Truss/Gable, Roof Kiosk, FRONT

SIZE	DWG. NO.	REV
D	MTK 19185F	A-1.0

SCALE: 1:2 SHEET 1 OF 1

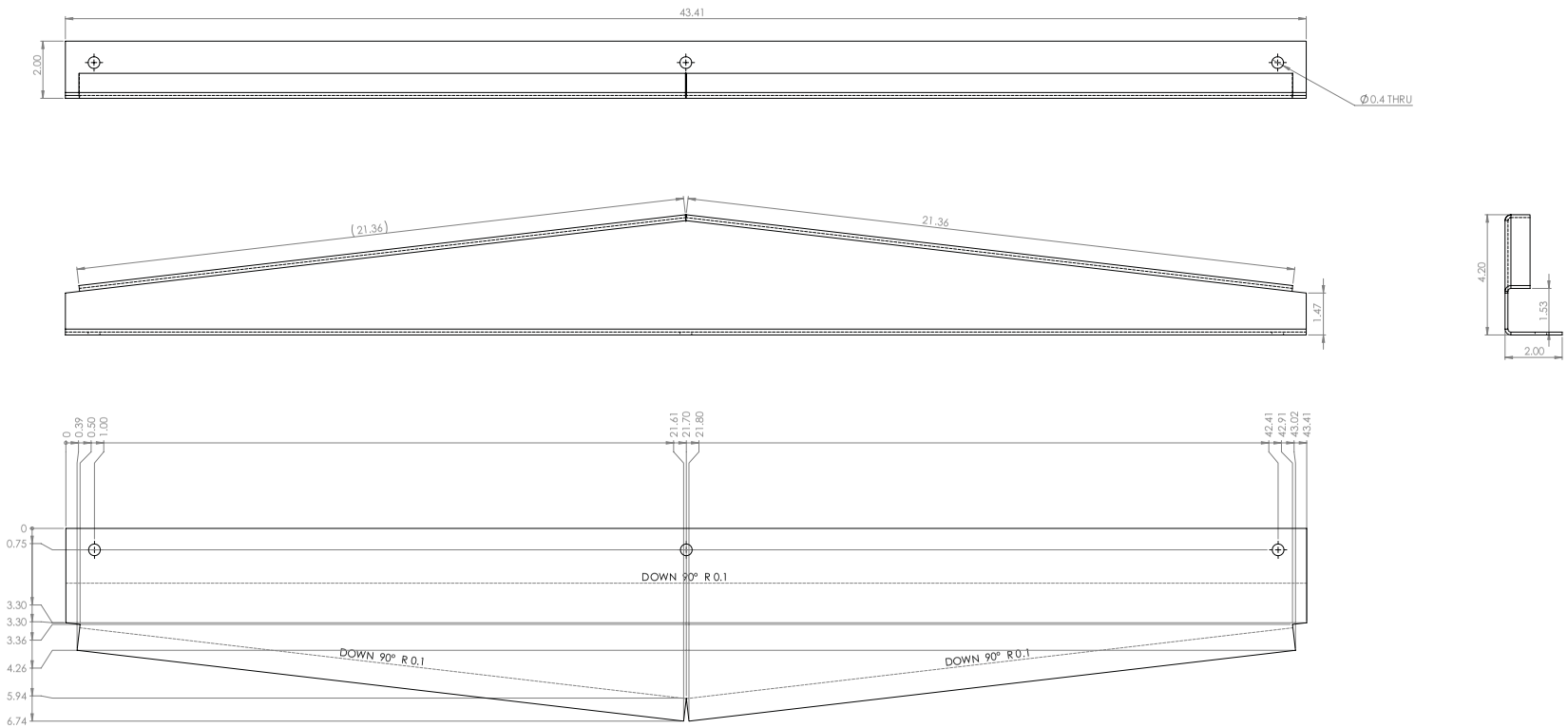

For REAR Side
SEE MTK 19185F for other Dimensions

PROPRIETARY AND CONFIDENTIAL
THE INFORMATION CONTAINED IN THIS DRAWING IS THE SOLE PROPERTY OF the **Geological Survey of Canada (G.S.C)**. ANY REPRODUCTION IN PART OR AS A WHOLE WITHOUT THE WRITTEN PERMISSION OF THE **G.S.C.** IS PROHIBITED.

UNLESS OTHERWISE SPECIFIED:
DIMENSIONS ARE IN **INCHES**
TOLERANCES:
FRACTIONAL ±1/32
ANGULAR: MACH ±1 BEND ±1
TWO PLACE DECIMAL ±0.005
THREE PLACE DECIMAL ±0.001
INTERPRET GEOMETRIC TOLERANCING PER: **ASME Y14.5-2009**
MATERIAL
10 ga 5052-H32
FINISH
As Formed
DO NOT SCALE DRAWING

	NAME	DATE
DRAWN	DJP	XXX
DESIGN	HOV	XXX

COMMENTS

(CHIS) Mountaintop Kiosk

TITLE:
Truss/Gable, Roof Kiosk, REAR

SIZE	DWG. NO.	REV
D	MTK 19185R	A-1.0

SCALE: 1:2 | SHEET 1 OF 1

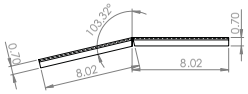

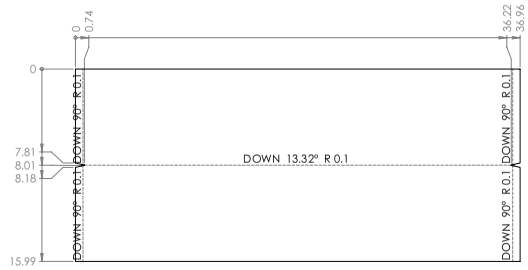

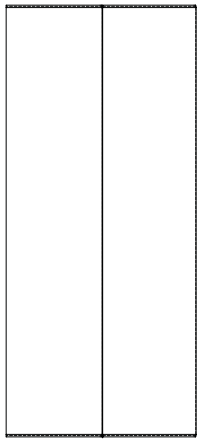

PROPRIETARY AND CONFIDENTIAL
THE INFORMATION CONTAINED IN THIS DRAWING IS THE SOLE PROPERTY OF THE **Geological Survey of Canada (G.S.C)**. ANY REPRODUCTION IN PART OR AS A WHOLE WITHOUT THE WRITTEN PERMISSION OF THE **G.S.C.** IS PROHIBITED.

UNLESS OTHERWISE SPECIFIED:
DIMENSIONS ARE IN **INCHES**
TOLERANCES:
FRACTIONAL ±1/32°
ANGULAR: MACH ±1 BEND ±1
TWO PLACE DECIMAL ±0.005
THREE PLACE DECIMAL ±0.001
INTERPRET GEOMETRIC TOLERANCING PER: **ASME Y14.5-2009**
MATERIAL
#10 ga 50 52-H32
FINISH
As Formed
DO NOT SCALE DRAWING

	NAME	DATE
DRAWN	HOV	XXX
DESIGN	HOV	XXX

COMMENTS:

(CHIS) Mountaintop Kiosk

TITLE:
Cap, Roof, Kiosk

SIZE **D** | DWG. NO. MTK 19187 | REV A-1.0

SCALE: 1:5 | SHEET 1 OF 1

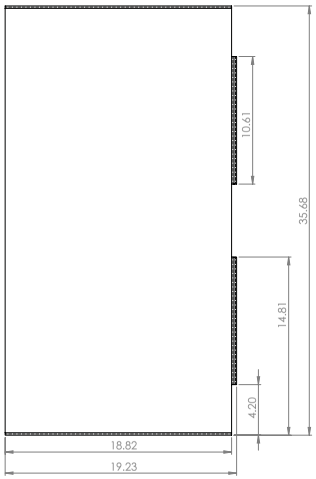

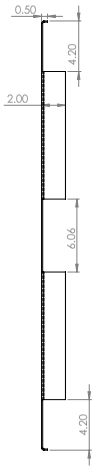

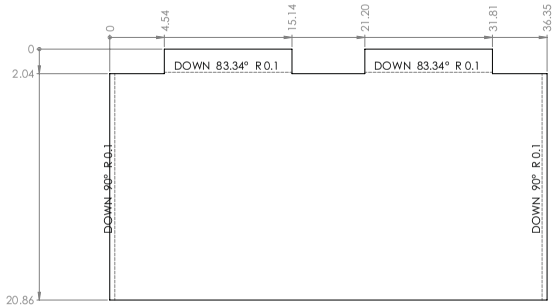

PROPRIETARY AND CONFIDENTIAL
THE INFORMATION CONTAINED IN THIS DRAWING IS THE SOLE PROPERTY OF THE **Geological Survey of Canada (G.S.C)**. ANY REPRODUCTION IN PART OR AS A WHOLE WITHOUT THE WRITTEN PERMISSION OF THE **G.S.C.** IS PROHIBITED.

UNLESS OTHERWISE SPECIFIED:
DIMENSIONS ARE IN **INCHES**
TOLERANCES:
FRACTIONAL ±1/32"
ANGULAR: MACH ±1 BEND ±1
TWO PLACE DECIMAL ±0.005
THREE PLACE DECIMAL ±0.001
INTERPRET GEOMETRIC TOLERANCING PER: **ASME Y14.5-2009**
MATERIAL
10 ga 5052-H32
FINISH
As Formed
DO NOT SCALE DRAWING

	NAME	DATE
DRAWN	DJP	XXX
DESIGN	HOV	XXX

COMMENTS

(CHIS) Mountaintop Kiosk

TITLE:
Panel, Roof Kiosk

SIZE	DWG. NO.	REV
D	MTK 19186	A-1.0

SCALE: 1:5 SHEET 1 OF 1

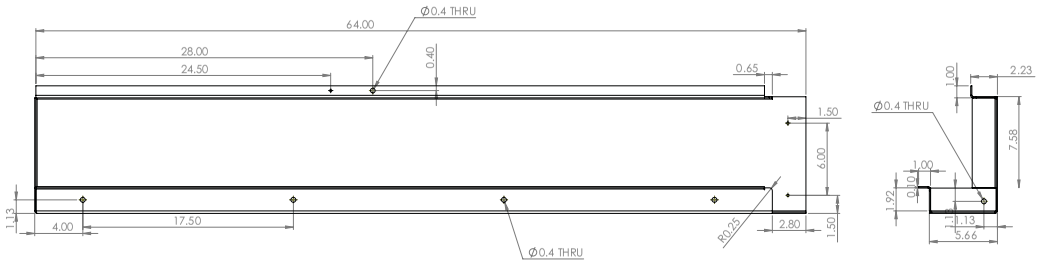

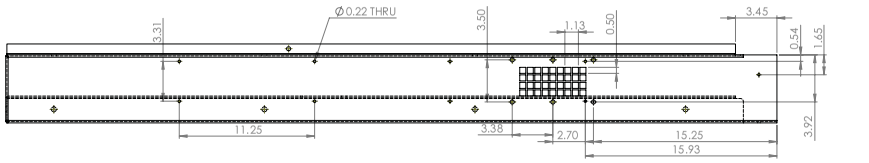

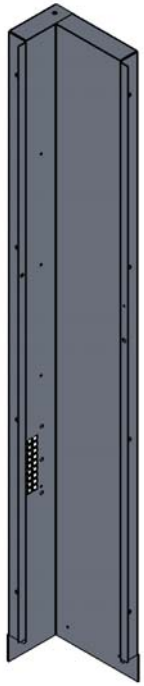

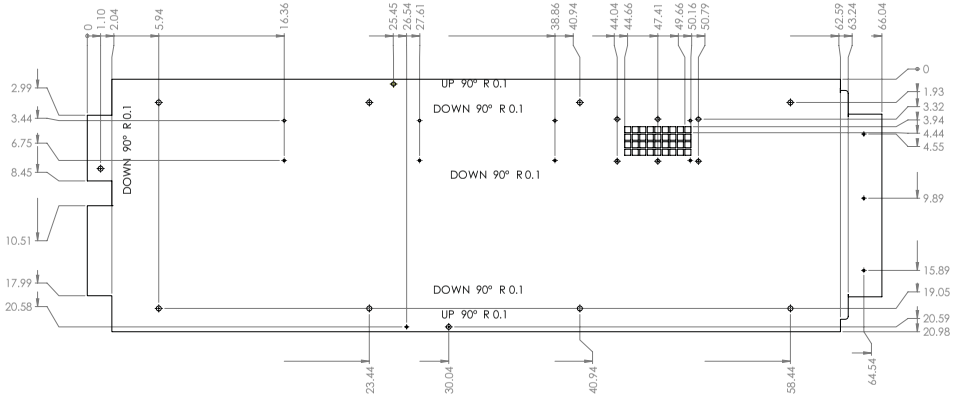

PROPRIETARY AND CONFIDENTIAL
THE INFORMATION CONTAINED IN THIS DRAWING IS THE SOLE PROPERTY OF the **Geological Survey of Canada (G.S.C)**. ANY REPRODUCTION IN PART OR AS A WHOLE WITHOUT THE WRITTEN PERMISSION OF THE **G.S.C.** IS PROHIBITED.

UNLESS OTHERWISE SPECIFIED:
DIMENSIONS ARE IN **INCHES**
TOLERANCES:
FRACTIONAL ±1/32
ANGULAR: MACH ±1 BEND ±1
TWO PLACE DECIMAL ±0.005
THREE PLACE DECIMAL ±0.001
INTERPRET GEOMETRIC TOLERANCING PER: **ASME Y14.5-2009**
MATERIAL
#10 ga 5052-H32
FINISH
As Formed
DO NOT SCALE DRAWING

	NAME	DATE
DRAWN	DJP	2016-03-15
DESIGN	XXX	XXX

COMMENTS

(CHIS) Mountaintop Kiosk

TITLE:
Rear Left Corner Pillar

SIZE	DWG. NO.	REV
D	MTK 19188RL	A-1.0

SCALE: 1:5 | SHEET 1 OF 1

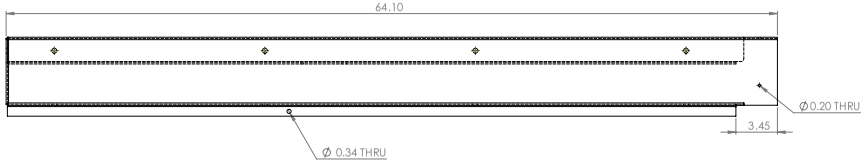

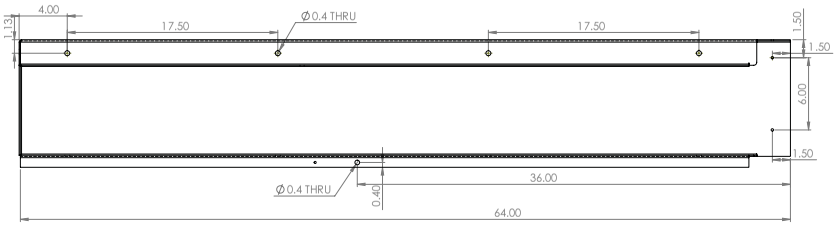

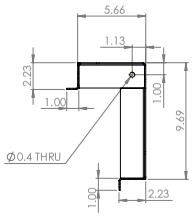

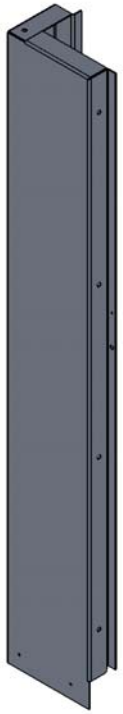

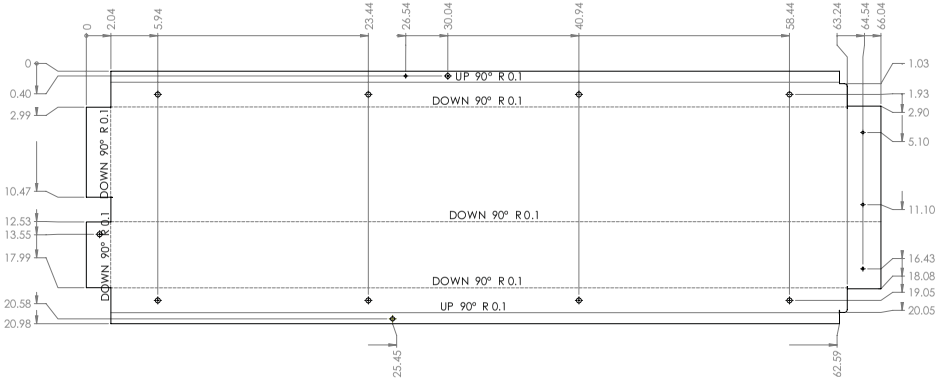

PROPRIETARY AND CONFIDENTIAL
THE INFORMATION CONTAINED IN THIS DRAWING IS THE SOLE PROPERTY OF the **Geological Survey of Canada (G.S.C)**. ANY REPRODUCTION IN PART OR AS A WHOLE WITHOUT THE WRITTEN PERMISSION OF THE **G.S.C.** IS PROHIBITED.

UNLESS OTHERWISE SPECIFIED:
DIMENSIONS ARE IN **INCHES**
TOLERANCES:
FRACTIONAL ±1/32
ANGULAR: MACH ±1 BEND ±1
TWO PLACE DECIMAL ±0.005
THREE PLACE DECIMAL ±0.001
INTERPRET GEOMETRIC TOLERANCING PER: **ASME Y14.5-2009**
MATERIAL
#10 ga S0S2-H32
FINISH
As Formed
DO NOT SCALE DRAWING

	NAME	DATE
DRAWN	DJP	XXX
DESIGN	HOV	XXX

COMMENTS

(CHIS) Mountaintop Kiosk

TITLE:
Rear Right Corner Pillar

SIZE	DWG. NO.	REV
D	MTK 19188RR	A-1.0

SCALE: 1:5 SHEET 1 OF 1

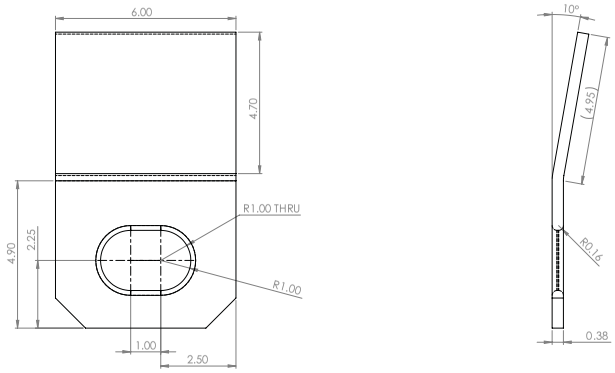

PROPRIETARY AND CONFIDENTIAL
THE INFORMATION CONTAINED IN THIS DRAWING IS THE SOLE PROPERTY OF THE **Geological Survey of Canada (G.S.C)**. ANY REPRODUCTION IN PART OR AS A WHOLE WITHOUT THE WRITTEN PERMISSION OF THE **G.S.C.** IS PROHIBITED.

UNLESS OTHERWISE SPECIFIED:
DIMENSIONS ARE IN **INCHES**
TOLERANCES:
FRACTIONAL ±1/32
ANGULAR: MACH ±1 BEND ±1
TWO PLACE DECIMAL ±0.005
THREE PLACE DECIMAL ±0.001
INTERPRET GEOMETRIC TOLERANCING PER: **ASME Y14.5-2009**
MATERIAL 6061 Alloy
FINISH Architectural 4
DO NOT SCALE DRAWING

	NAME	DATE
DRAWN	HOV	XXX
DESIGN	HOV	XXX

COMMENTS:

(CHIS) Mountaintop Kiosk

TITLE: Lifting Eye, Weld On

SIZE	DWG. NO.	REV
D	MTK 19189	A-1.0

SCALE: 1:2 SHEET 1 OF 1

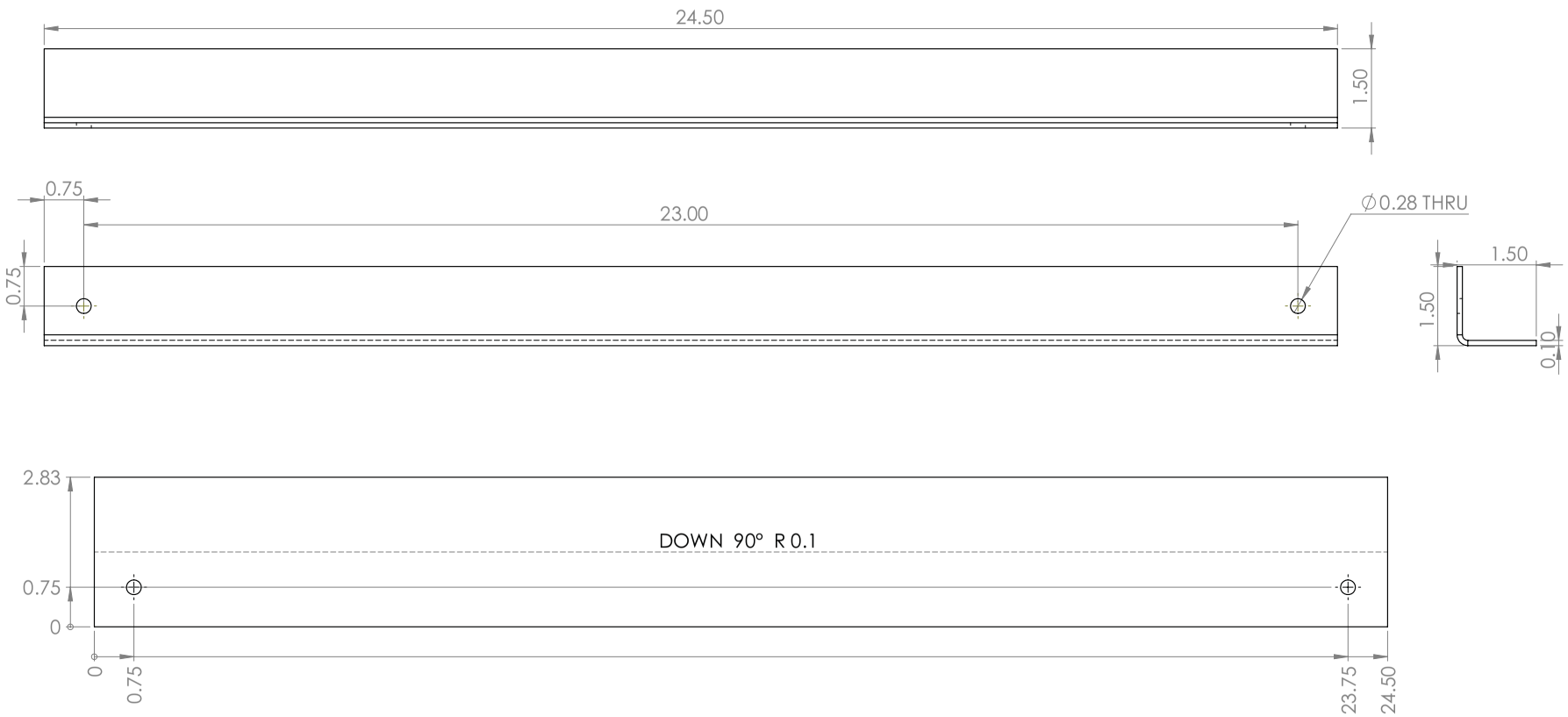

PROPRIETARY AND CONFIDENTIAL

THE INFORMATION CONTAINED IN THIS DRAWING IS THE SOLE PROPERTY OF the **Geological Survey of Canada (G.S.C)** ANY REPRODUCTION IN PART OR AS A WHOLE WITHOUT THE WRITTEN PERMISSION OF **G.S.C.** IS PROHIBITED.

GSC PACIFIC

Natural Resources Canada / Ressources naturelles Canada

UNLESS OTHERWISE SPECIFIED:

DIMENSIONS ARE IN **INCHES**
TOLERANCES:
FRACTIONAL: 1/32"
ANGULAR: MACH 0.1 BEND 0.1
TWO PLACE DECIMAL 0.005
THREE PLACE DECIMAL 0.001

INTERPRET GEOMETRIC TOLERANCING PER: **ASME Y14.5-2009**

MATERIAL
#10 ga 5052 -H32

FINISH
As Formed

DO NOT SCALE DRAWING

	NAME	DATE
DRAWN	HOV	XXX
DESIGN	HOV	XXX

COMMENTS:

PROJECT (GROUP)
(CHIS) Mountain Top Kiosk

TITLE:
Support, Angle Shelf AL

SIZE **B** | DWG. NO. MTK 19196 | REV A-1.0

SCALE: 1:2 | SHEET 1 OF 1

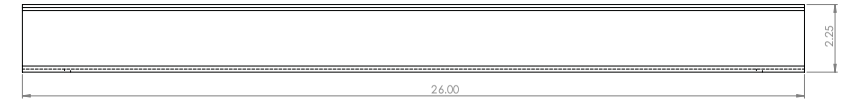

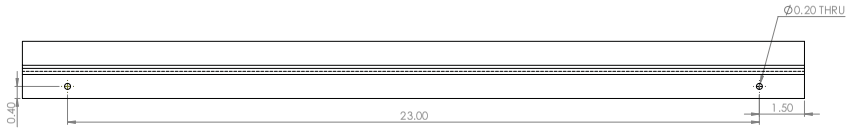

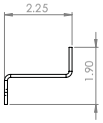

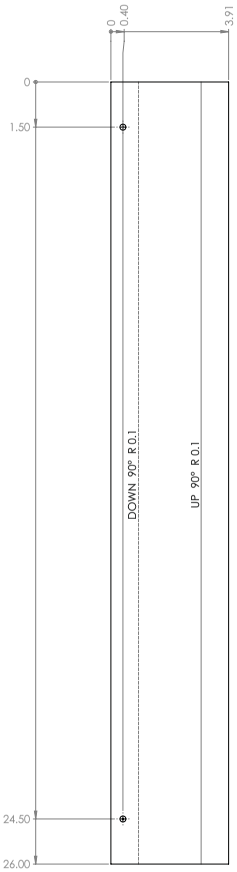

PROPRIETARY AND CONFIDENTIAL

THE INFORMATION CONTAINED IN THIS DRAWING IS THE SOLE PROPERTY OF the **Geological Survey of Canada (G.S.C)**. ANY REPRODUCTION IN PART OR AS A WHOLE WITHOUT THE WRITTEN PERMISSION OF THE **G.S.C.** IS PROHIBITED.

UNLESS OTHERWISE SPECIFIED:
DIMENSIONS ARE IN **INCHES**
TOLERANCES:
FRACTIONAL ±1/32"
ANGULAR: MACH ±1 BEND ±1
TWO PLACE DECIMAL ±0.005
THREE PLACE DECIMAL ±0.001
INTERPRET GEOMETRIC TOLERANCING PER: **ASME Y14.5-2009**
MATERIAL
#10 ga 5052-H32
FINISH
AS Formed
DO NOT SCALE DRAWING

	NAME	DATE
DRAWN	HOV	XXX
DESIGN	HOV	XXX

COMMENTS:

(CHIS) Mountaintop Kiosk

TITLE:
CHANNEL, "Z", AL, Back

SIZE	DWG. NO.	REV
D	MTK 19207-01	A-2.0

SCALE: 1:2 | SHEET 1 OF 1

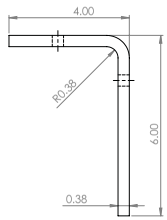

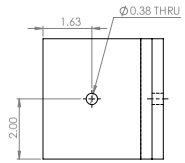

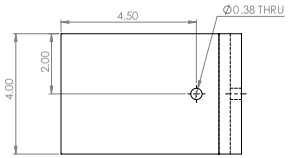

PROPRIETARY AND CONFIDENTIAL
THE INFORMATION CONTAINED IN THIS DRAWING IS THE SOLE PROPERTY OF the **Geological Survey of Canada (G.S.C)**. ANY REPRODUCTION IN PART OR AS A WHOLE WITHOUT THE WRITTEN PERMISSION OF THE **G.S.C.** IS PROHIBITED.

UNLESS OTHERWISE SPECIFIED:
DIMENSIONS ARE IN **INCHES**
TOLERANCES:
FRACTIONAL ±1/32
ANGULAR: MACH ±1 BEND ±1
TWO PLACE DECIMAL ±0.005
THREE PLACE DECIMAL ±0.001
INTERPRET GEOMETRIC TOLERANCING PER: **ASME Y14.5-2009**
MATERIAL
.375" Plate 5052-H32
FINISH
Architectural 4
DO NOT SCALE DRAWING

	NAME	DATE
DRAWN	DJP	XXX
DESIGN	HOV	XXX

COMMENTS

(CHIS) Mountaintop Kiosk

TITLE:
Tab, Solar Panel MNTNG Kiosk

SIZE **D** | DWG. NO. MTK 19208 | REV A-1.0

SCALE: 1:2 | SHEET 1 OF 1

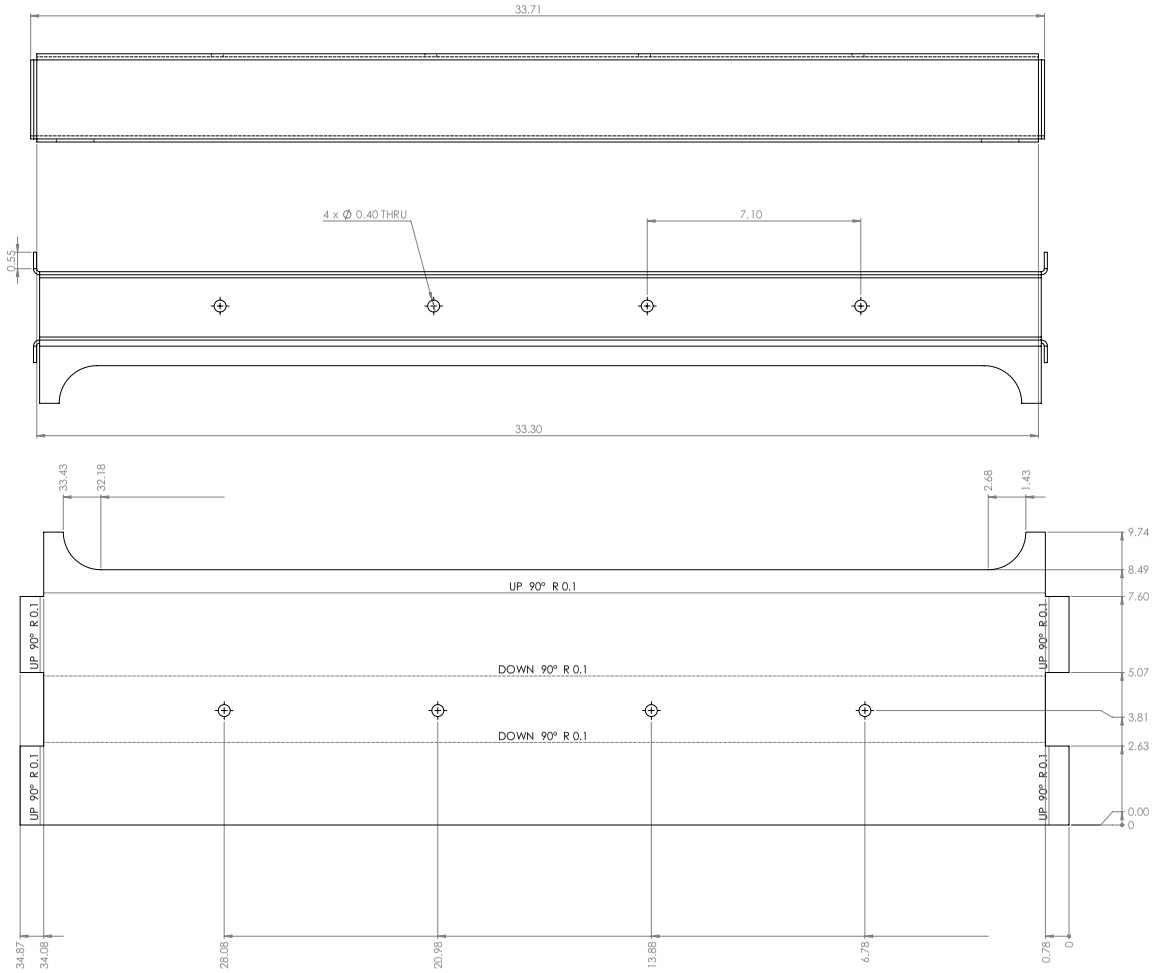

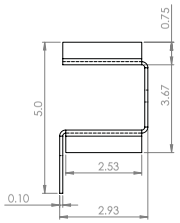

PROPRIETARY AND CONFIDENTIAL
THE INFORMATION CONTAINED IN THIS DRAWING IS THE SOLE PROPERTY OF the **Geological Survey of Canada (G.S.C)**. ANY REPRODUCTION IN PART OR AS A WHOLE WITHOUT THE WRITTEN PERMISSION OF THE **G.S.C.** IS PROHIBITED.

UNLESS OTHERWISE SPECIFIED:
DIMENSIONS ARE IN **INCHES**
TOLERANCES:
FRACTIONAL ±1/32
ANGULAR: MACH ±1 BEND ±1
TWO PLACE DECIMAL ±0.005
THREE PLACE DECIMAL ±0.001
INTERPRET GEOMETRIC TOLERANCING PER: **ASME Y14.5-2009**
MATERIAL
#10 ga S0S2-H32
FINISH
As Formed
DO NOT SCALE DRAWING

	NAME	DATE
DRAWN	DJP	2016-03-10
DESIGN	DJP	2016-03-03

COMMENTS

(CHIS) Mountaintop Kiosk

TITLE: Combined Lintel and Sill

SIZE	DWG. NO.	REV
D	MTK104	A-2.0

SCALE: 1:2 SHEET 1 OF 1

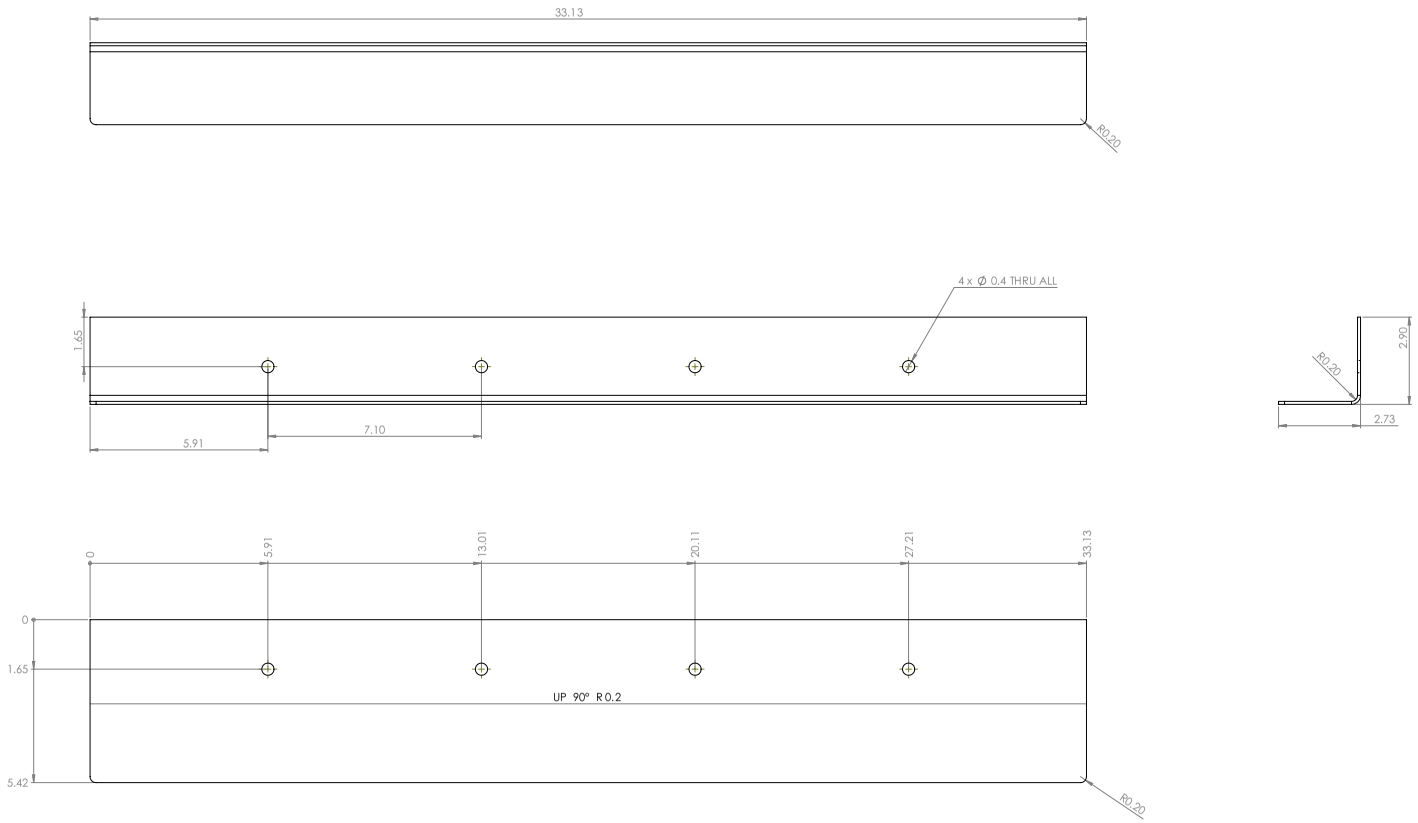

PROPRIETARY AND CONFIDENTIAL
THE INFORMATION CONTAINED IN THIS DRAWING IS THE SOLE PROPERTY OF the **Geological Survey of Canada (G.S.C)**. ANY REPRODUCTION IN PART OR AS A WHOLE WITHOUT THE WRITTEN PERMISSION OF THE **G.S.C.** IS PROHIBITED.

UNLESS OTHERWISE SPECIFIED:
DIMENSIONS ARE IN **INCHES**
TOLERANCES:
FRACTIONAL ±1/32
ANGULAR: MACH ±1 BEND ±1
TWO PLACE DECIMAL ±0.005
THREE PLACE DECIMAL ±0.001
INTERPRET GEOMETRIC TOLERANCING PER: **ASME Y14.5-2009**
MATERIAL
#10 ga 50.52-H32
FINISH
As Formed
DO NOT SCALE DRAWING

	NAME	DATE
DRAWN	DJP	2016-03-10
DESIGN	DJP	2016-03-03

COMMENTS:

(CHIS) Mountain Top KIOSK

TITLE: Front sill spacer

SIZE **D** | DWG. NO. MTK161 | REV A-1.0

SCALE: 1:2 | SHEET 1 OF 1

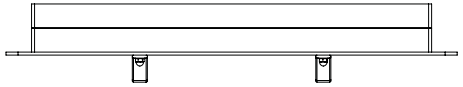

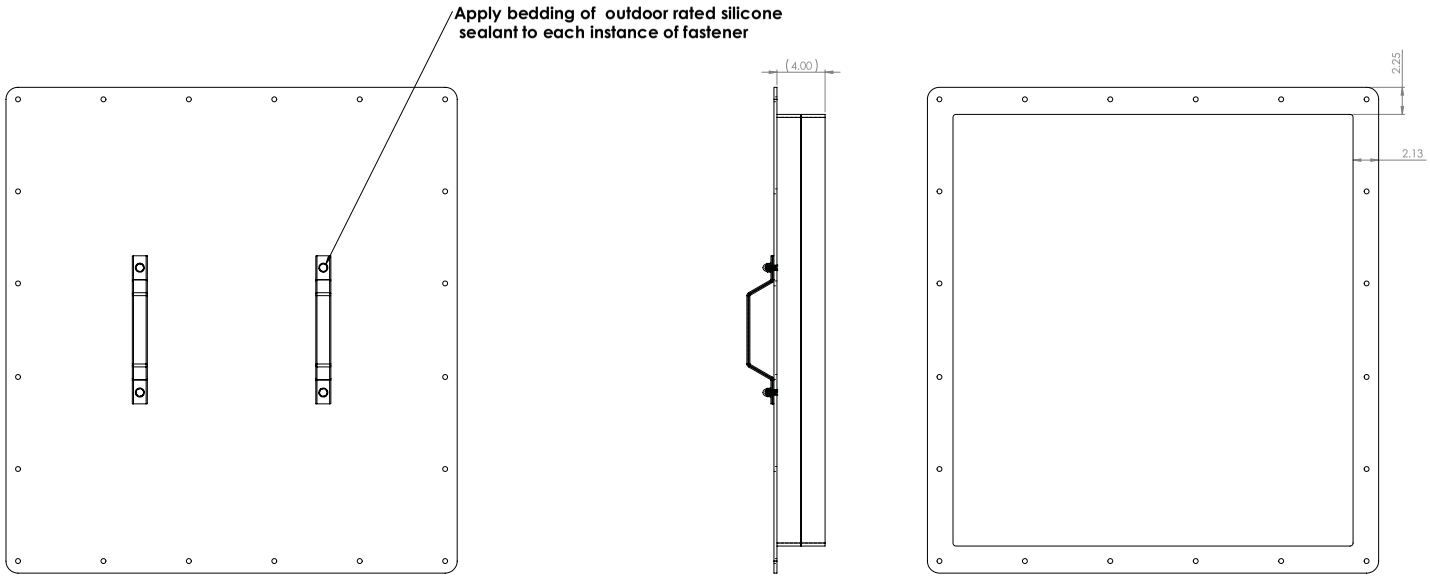

PROPRIETARY AND CONFIDENTIAL
THE INFORMATION CONTAINED IN THIS DRAWING IS THE SOLE PROPERTY OF THE **Geological Survey of Canada (G.S.C.)**. ANY REPRODUCTION IN PART OR AS A WHOLE WITHOUT THE WRITTEN PERMISSION OF THE **G.S.C.** IS PROHIBITED.

UNLESS OTHERWISE SPECIFIED:
DIMENSIONS ARE IN **INCHES**
TOLERANCES:
FRACTIONAL ±1/32
ANGULAR: MACH ±1 BEND ±1
TWO PLACE DECIMAL ±0.005
THREE PLACE DECIMAL ±0.001
INTERPRET GEOMETRIC TOLERANCING PER: **ASME Y14.5-2009**
MATERIAL
FINISH
DO NOT SCALE DRAWING

	NAME	DATE
DRAWN	DJP	2016-03-10
DESIGN	DJP	2016-03-03

COMMENTS

(CHIS) Mountaintop Kiosk

TITLE: Hatch Assembly

SIZE	DWG. NO.	REV
D	MTK202	A-2.0

SCALE: 1:5 SHEET 1 OF 2

ITEM NO.	PART NUMBER	DESCRIPTION	QTY.
1	MTK107a	Hatch Grip	2
2	MTK107	Hatch Plate	1
3	SFHH3751612C	3/8-16X .75 SS Captive Stud	4
4	90107A127	3/8 316 SS Flat Washer	4
5	92994A031	3/8-16X S.S. Cap Nut	4
6	MTK117	Hatch Insulation	2

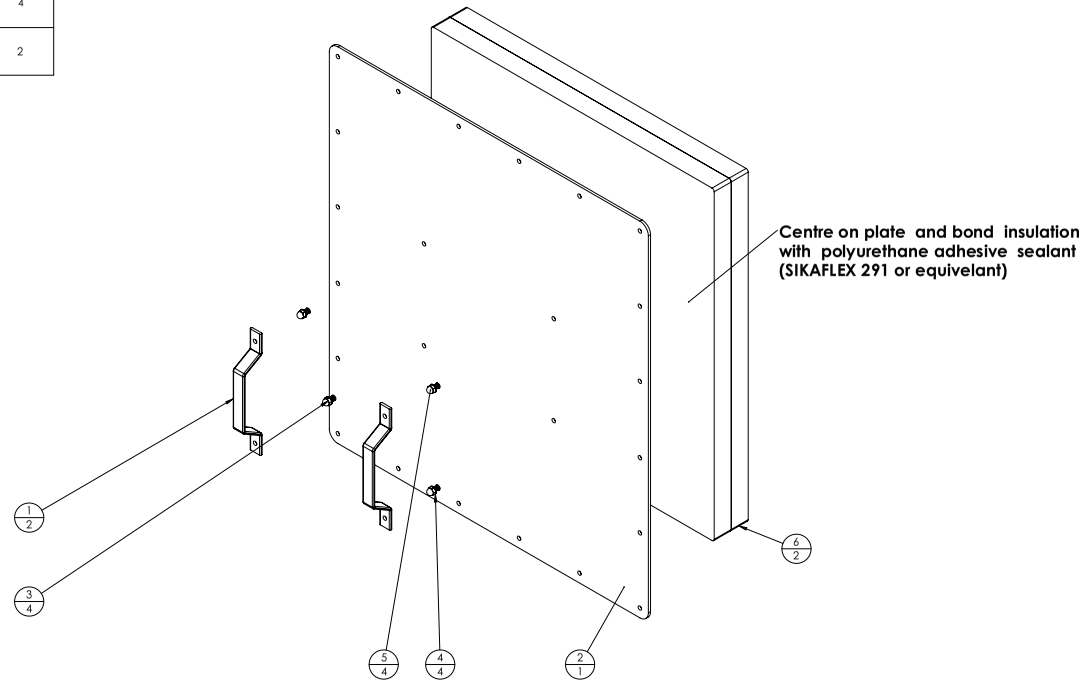

PROPRIETARY AND CONFIDENTIAL
THE INFORMATION CONTAINED IN THIS DRAWING IS THE SOLE PROPERTY OF the **Geological Survey of Canada (G.S.C)**. ANY REPRODUCTION IN PART OR AS A WHOLE WITHOUT THE WRITTEN PERMISSION OF THE **G.S.C.** IS PROHIBITED.

UNLESS OTHERWISE SPECIFIED:
DIMENSIONS ARE IN **INCHES**
TOLERANCES:
FRACTIONAL ±1/32
ANGULAR: MACH ±1 BEND ±1
TWO PLACE DECIMAL ±0.005
THREE PLACE DECIMAL ±0.001
INTERPRET GEOMETRIC TOLERANCING PER **ASME Y14.5-2009**
MATERIAL
FINISH
DO NOT SCALE DRAWING

	NAME	DATE
DRAWN	DJP	2016-03-10
DESIGN	DJP	2016-03-03

COMMENTS

(CHIS) Mountaintop Kiosk

TITLE: Hatch Assembly

SIZE **D** | DWG. NO. MTK202 | REV A-2.0

SCALE: 1:5 | SHEET 2 OF 2

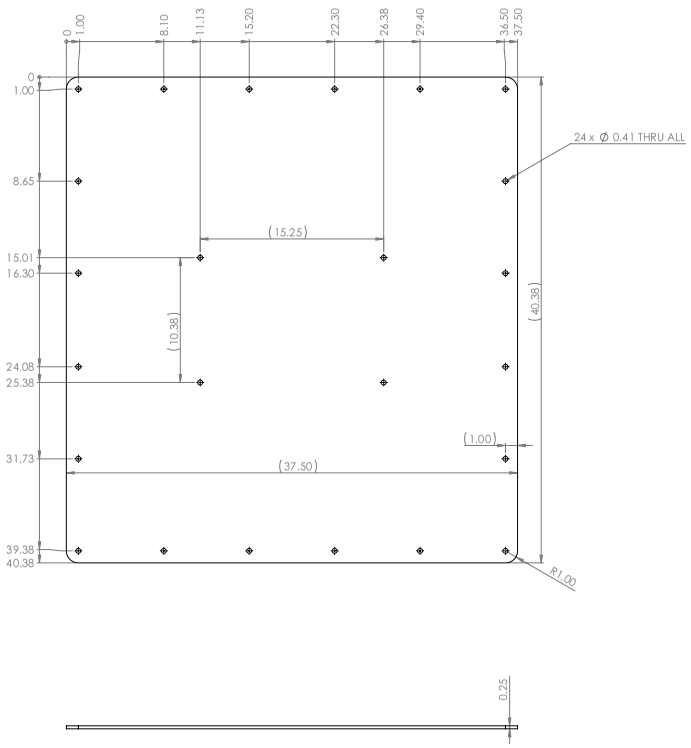

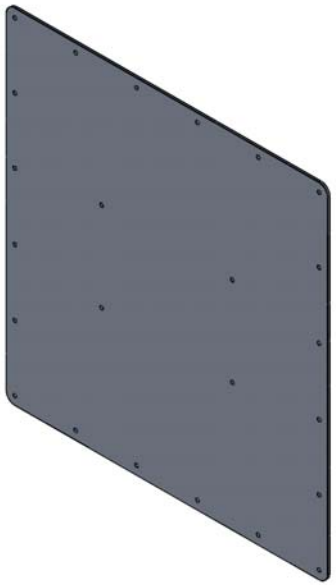

PROPRIETARY AND CONFIDENTIAL
THE INFORMATION CONTAINED IN THIS DRAWING IS THE SOLE PROPERTY OF THE **Geological Survey of Canada (G.S.C)**. ANY REPRODUCTION IN PART OR AS A WHOLE WITHOUT THE WRITTEN PERMISSION OF THE **G.S.C.** IS PROHIBITED.

UNLESS OTHERWISE SPECIFIED:
DIMENSIONS ARE IN **INCHES**
TOLERANCES:
FRACTIONAL ±1/32
ANGULAR: MACH ±1 BEND ±1
TWO PLACE DECIMAL ±0.005
THREE PLACE DECIMAL ±0.001
INTERPRET GEOMETRIC TOLERANCING PER: **ASME Y14.5-2009**
MATERIAL 6061 Alloy
FINISH #4 Architectural
DO NOT SCALE DRAWING

	NAME	DATE
DRAWN	DJP	2016-03-14
DESIGN	DJP	2016-03-03

COMMENTS

(CHIS) Mountaintop Kiosk

TITLE: Hatch Plate

SIZE	DWG. NO.	REV
D	MTK107	A-2.0

SCALE: 1:5 SHEET 1 OF 1

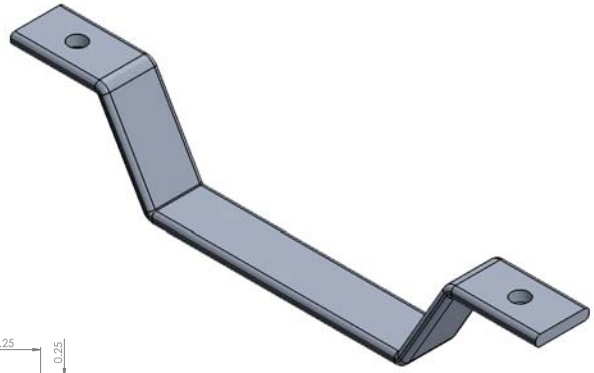

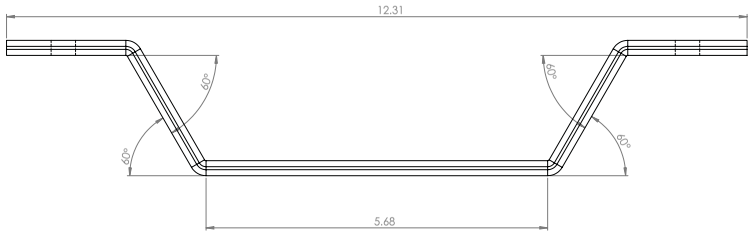

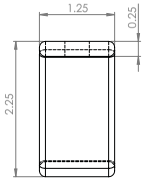

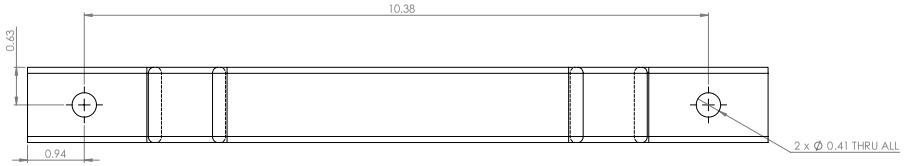

PROPRIETARY AND CONFIDENTIAL
THE INFORMATION CONTAINED IN THIS DRAWING IS THE SOLE PROPERTY OF the **Geological Survey of Canada (G.S.C)**. ANY REPRODUCTION IN PART OR AS A WHOLE WITHOUT THE WRITTEN PERMISSION OF THE **G.S.C.** IS PROHIBITED.

UNLESS OTHERWISE SPECIFIED:
DIMENSIONS ARE IN **INCHES**
TOLERANCES:
FRACTIONAL ±1/32°
ANGULAR: MACH ±1 BEND ±1
TWO PLACE DECIMAL ±0.005
THREE PLACE DECIMAL ±0.001
INTERPRET GEOMETRIC TOLERANCING PER: **ASME Y14.5-2009**
MATERIAL 5052-H32
FINISH #4 Arch
DO NOT SCALE DRAWING

	NAME	DATE
DRAWN	DJP	2014-03-13
DESIGN	DJP	2013-03-03

COMMENTS

(CHIS) Mountaintop Kiosk

TITLE: Hatch Grip

SIZE **D** | DWG. NO. MTK107a | REV A-1.0

SCALE: 1:1 | SHEET 1 OF 1

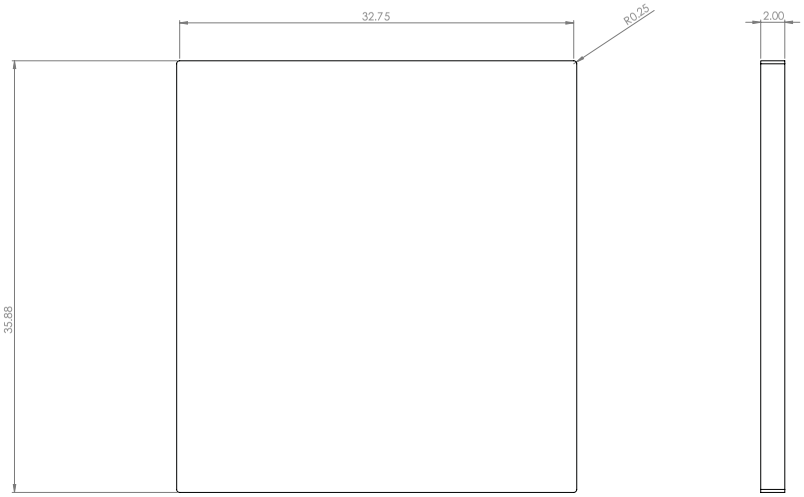

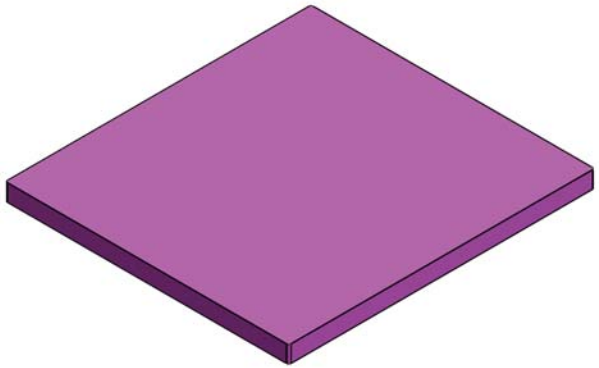

PROPRIETARY AND CONFIDENTIAL
THE INFORMATION CONTAINED IN THIS DRAWING IS THE SOLE PROPERTY OF THE **Geological Survey of Canada (G.S.C)**. ANY REPRODUCTION IN PART OR AS A WHOLE WITHOUT THE WRITTEN PERMISSION OF THE **G.S.C.** IS PROHIBITED.

UNLESS OTHERWISE SPECIFIED:
DIMENSIONS ARE IN **INCHES**
TOLERANCES:
FRACTIONAL ±1/32
ANGULAR: MACH ±1 BEND ±1
TWO PLACE DECIMAL ±0.005
THREE PLACE DECIMAL ±0.001
INTERPRET GEOMETRIC TOLERANCING PER: **ASME Y14.5-2009**
MATERIAL
PolyStyrene Foam
FINISH
As Cut
DO NOT SCALE DRAWING

	NAME	DATE
DRAWN	DJP	2016-03-10
DESIGN	DJP	2016-03-03

COMMENTS:

(CHIS) Mountaintop Kiosk

TITLE:
Hatch Insulation

SIZE **D** | DWG. NO. MTK1117 | REV A-1.0

SCALE: 1:5 | SHEET 1 OF 1

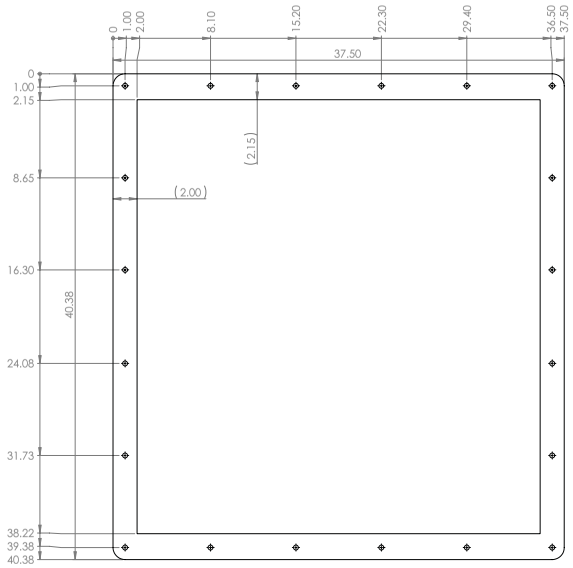

MAKE IN ONE PIECE

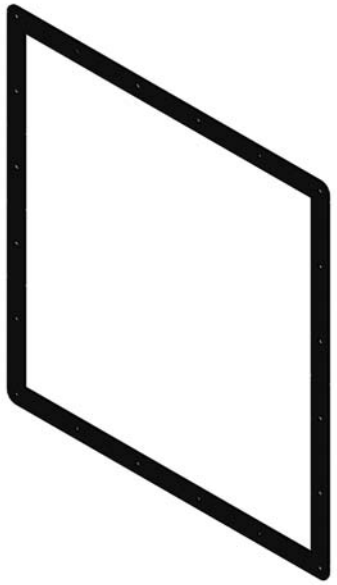

PROPRIETARY AND CONFIDENTIAL
THE INFORMATION CONTAINED IN THIS DRAWING IS THE SOLE PROPERTY OF THE **Geological Survey of Canada (G.S.C)**. ANY REPRODUCTION IN PART OR AS A WHOLE WITHOUT THE WRITTEN PERMISSION OF THE **G.S.C.** IS PROHIBITED.

UNLESS OTHERWISE SPECIFIED:
DIMENSIONS ARE IN **INCHES**
TOLERANCES:
FRACTIONAL ±1/32
ANGULAR: MACH ±1 BEND ±1
TWO PLACE DECIMAL ±0.005
THREE PLACE DECIMAL ±0.001
INTERPRET GEOMETRIC TOLERANCING PER: **ASME Y14.5-2009**
MATERIAL: NEOPRENE
FINISH: As Cut
DO NOT SCALE DRAWING

	NAME	DATE
DRAWN	DJP	2016-03-10
DESIGN	DJP	2016-03-03

COMMENTS:

(CHIS) Mountaintop Kiosk

TITLE: Hatch Gasket

SIZE: D
DWG. NO.: MTK108
REV: A-2.0
SCALE: 1:5
SHEET 1 OF 1

ITEM NO.	PART NUMBER	DESCRIPTION	QTY.
1	MTK109	Hatch Bezel	1
2	MTK156	Hatch Bezel Spacer	1
3	SFHH3751620C	3/8-16X 1-1/4 SS Captive Stud	20

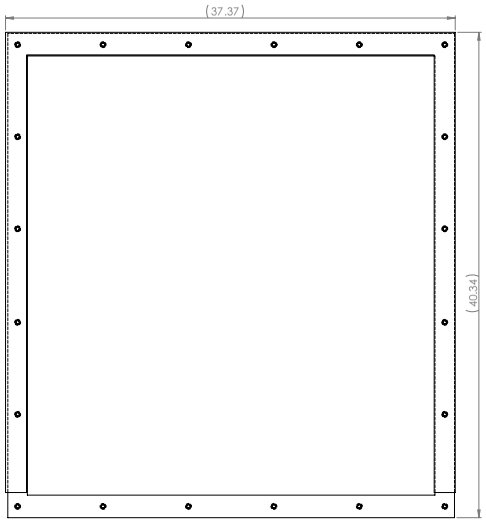

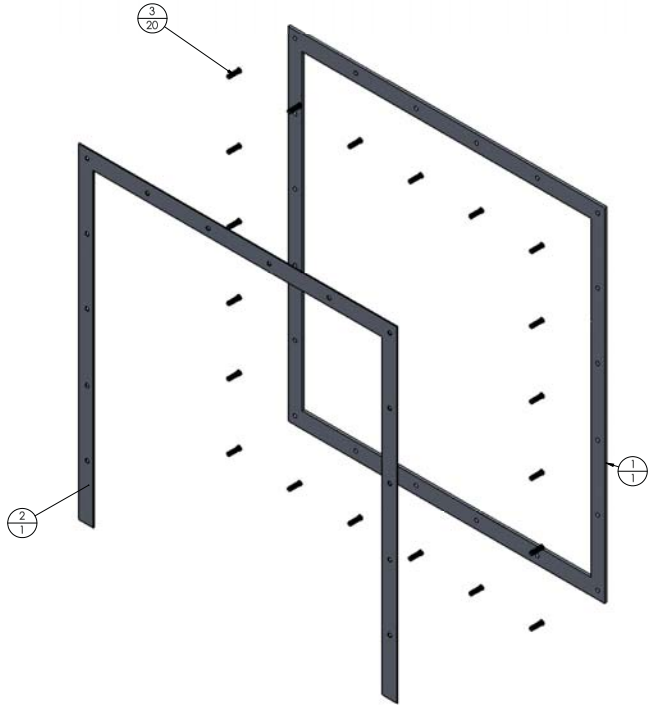

Press in captive studs, assemble bezel, then bolt in place from inside battery hatch frome opening and tack weld into Kiosk frame

PROPRIETARY AND CONFIDENTIAL
THE INFORMATION CONTAINED IN THIS DRAWING IS THE SOLE PROPERTY OF the **Geological Survey of Canada (G.S.C)**. ANY REPRODUCTION IN PART OR AS A WHOLE WITHOUT THE WRITTEN PERMISSION OF THE **G.S.C.** IS PROHIBITED.

UNLESS OTHERWISE SPECIFIED:
DIMENSIONS ARE IN **INCHES**
TOLERANCES:
FRACTIONAL ±1/32
ANGULAR: MACH ±1 BEND ±1
TWO PLACE DECIMAL ±0.005
THREE PLACE DECIMAL ±0.001
INTERPRET GEOMETRIC TOLERANCING PER: **ASME Y14.5-2009**
MATERIAL
FINISH
DO NOT SCALE DRAWING

	NAME	DATE
DRAWN	DJP	2016-03-10
DESIGN	D.J.P.	2016-03-03

COMMENTS:

(CHIS) Mountaintop Kiosk

TITLE:
Inner Bolting Bezel Assembly

SIZE **D** | DWG. NO. MTK109C | REV A-1.0

SCALE: 1:5 | SHEET 1 OF 1

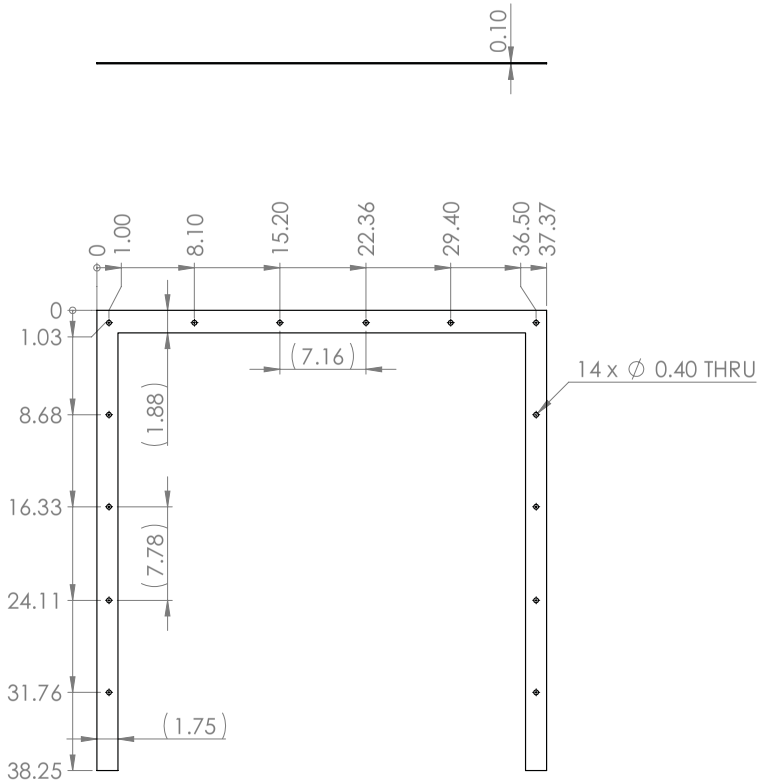

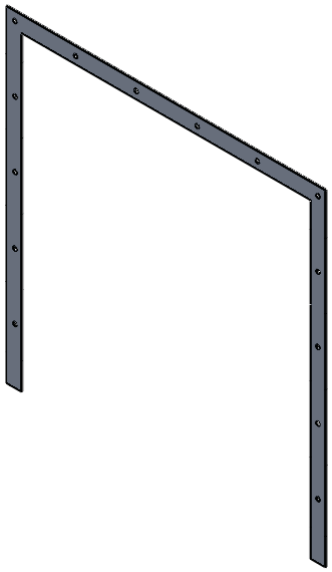

PROPRIETARY AND CONFIDENTIAL

THE INFORMATION CONTAINED IN THIS DRAWING IS THE SOLE PROPERTY OF the **Geological Survey of Canada (G.S.C)** ANY REPRODUCTION IN PART OR AS A WHOLE WITHOUT THE WRITTEN PERMISSION OF **G.S.C.** IS PROHIBITED.

GSC PACIFIC

Canada

UNLESS OTHERWISE SPECIFIED:

DIMENSIONS ARE IN **INCHES**
TOLERANCES:
FRACTIONAL: 1/32"
ANGULAR: MACH 0.1 BEND 0.1
TWO PLACE DECIMAL 0.005
THREE PLACE DECIMAL 0.001

INTERPRET GEOMETRIC TOLERANCING PER: **ASME Y14.5-2009**

MATERIAL
#10 ga 5052-H32

FINISH
#4 Arch

DO NOT SCALE DRAWING

	NAME	DATE
DRAWN	DJP	2016-03-13
DESIGN	DJP	2016-03-03

COMMENTS:

PROJECT (GROUP)
(CHIS) Mountain Top Kiosk

TITLE:
Hatch Bezel Spacer

SIZE	DWG. NO.	REV
B	MTK156	A-1.0

SCALE: 1:10 SHEET 1 OF 1

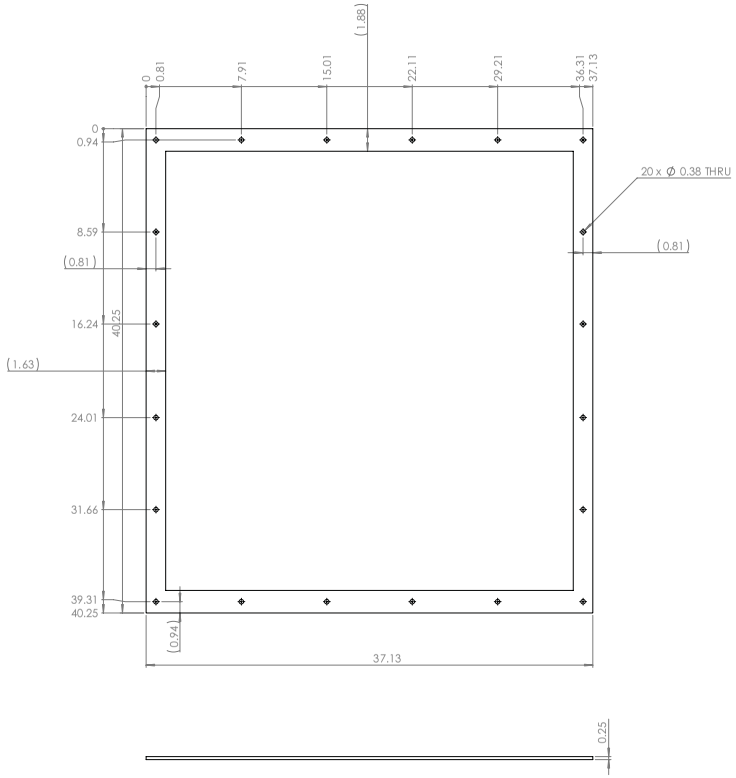

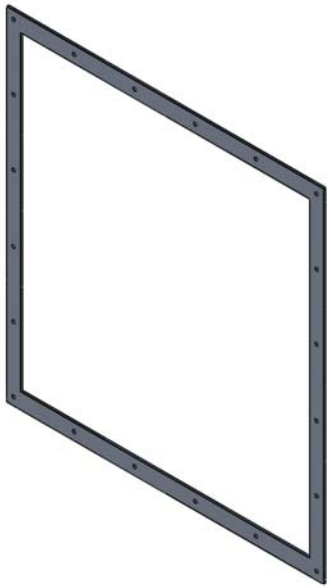

PROPRIETARY AND CONFIDENTIAL
THE INFORMATION CONTAINED IN THIS DRAWING IS THE SOLE PROPERTY OF THE **Geological Survey of Canada (G.S.C.)**. ANY REPRODUCTION IN PART OR AS A WHOLE WITHOUT THE WRITTEN PERMISSION OF THE **G.S.C.** IS PROHIBITED.

UNLESS OTHERWISE SPECIFIED:
DIMENSIONS ARE IN **INCHES**
TOLERANCES:
FRACTIONAL ±1/32
ANGULAR: MACH ±1 BEND ±1
TWO PLACE DECIMAL ±0.005
THREE PLACE DECIMAL ±0.001
INTERPRET GEOMETRIC TOLERANCING PER: **ASME Y14.5-2009**
MATERIAL 6061 Alloy
FINISH #4 Arch
DO NOT SCALE DRAWING

	NAME	DATE
DRAWN	DJP	2016-03-10
DESIGN	DJP	2016-03-03

COMMENTS

(CHIS) Mountain Top Kiosk

TITLE: Hatch Bezel

SIZE **D** | DWG. NO. MTK109 | REV A-2.0

SCALE: 1:5 | SHEET 1 OF 1

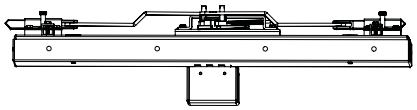

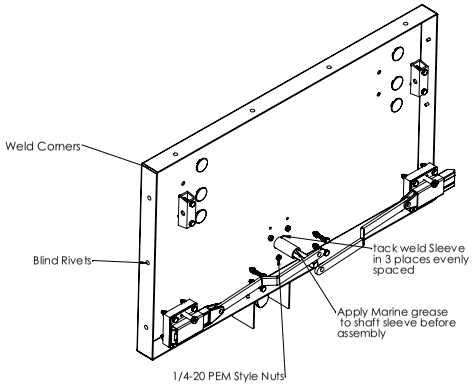

Detail Interior of Outer door skin
(Inner Skin hidden)

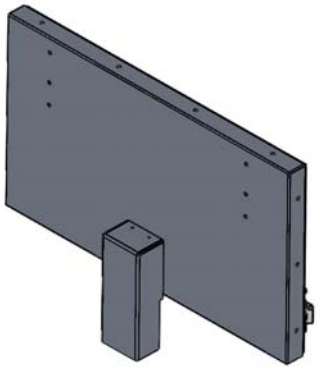

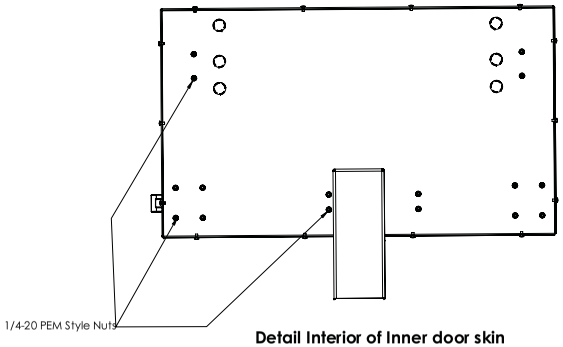

Detail Interior of Inner door skin
(outer skin hidden)

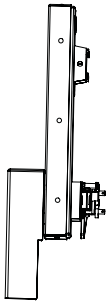

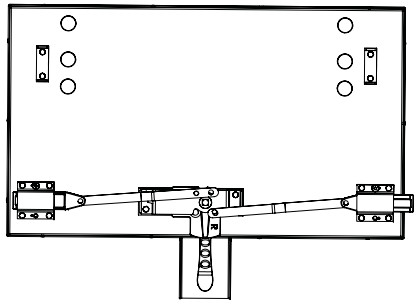

PROPRIETARY AND CONFIDENTIAL
THE INFORMATION CONTAINED IN THIS DRAWING IS THE SOLE PROPERTY OF the **Geological Survey of Canada (G.S.C)**. ANY REPRODUCTION IN PART OR AS A WHOLE WITHOUT THE WRITTEN PERMISSION OF THE **G.S.C.** IS PROHIBITED.

UNLESS OTHERWISE SPECIFIED:
DIMENSIONS ARE IN **INCHES**
TOLERANCES:
FRACTIONAL ±1/32
ANGULAR: MACH ±1 BEND ±1
TWO PLACE DECIMAL ±0.005
THREE PLACE DECIMAL ±0.001
INTERPRET GEOMETRIC TOLERANCING PER **ASME Y14.5-2009**
MATERIAL
FINISH
DO NOT SCALE DRAWING

	NAME	DATE
DRAWN	DJP	2016-03-10
DESIGN	DJP	2016-03-03
COMMENTS:		

(CHIS) Mountaintop Kiosk

TITLE: Instrument Door Assembly

SIZE **D** | DWG. NO. MTK203 | REV A-1.0

SCALE: 1:5 | SHEET 1 OF 2

ITEM NO.	PART NUMBER	DESCRIPTION	Supplier	QTY.
1	9688K131	Rigid Plastic Snap-in Plug 1 inch ID	© 2014 McMaster-Carr Supply Company	6
2	SierraPacific-310-SS-PS	LARGE PADLOCKABLE L-HANDLE WITH 1/2 SHAFT, 304SS, PASSIVATED	SierraPacific	1
3	SierraPacific-730 (01) (SEE Note Below)	3 PT CENTER CASE, ZINC PLATED	SierraPacific	1
4	MTK154	Latch Spacer		2
5	MTK151(SEE Note Below)	Sierra Latch Tang	SierraPacific	2
6	90945A760	1/4 SS flat washer .468 OD	© 2014 McMaster-Carr Supply Company	19
7	97345A632	5/16"-18 x 1.25" STAINLESS STEEL SHOULDER SCREW	© 2013 McMaster-Carr Supply Company	2
8	96870A212	1/4-20 x 1-1/2" SS HEX HEAD CAP SCREW	© 2014 McMaster-Carr Supply Company	16
9	MTK105	Instrument Door, Inner Skin		1
10	MTK106	Instrument Door,Outer Skin		1
11	96439A610	1/4"-20 SS PRESS-IN NUT FOR SHEET MTL	© 2015 McMaster-Carr Supply Company	19
12	97550A320	3/16 Dia Blind Rivet	© 2015 McMaster-Carr Supply Company	14
13	MTK114	Handle Shaft Sleeve		1
14	MTK116	Instrument Door Insulation		1
15	MTK111	Latch Cover		1
16	1575A8	Latch Cover Hinge	© 2012 McMaster-Carr Supply Company	1
17	MTK150 (SEE Note Below)	Sierra End Bolt Housing w/ Drill Mods	SierraPacific	2
18	MTK155	Latch Spacer Mid		1
19	MTK 152	Link Bar		2
20	MTK182	Prop Rod Pivot		2
21	91900A537	1/4"-20 X 0.5"_18-8 SS PIN-IN-TORX BUTTON SOCKET CAP SCREW	© 2014 McMaster-Carr Supply Company	3

Order 730-01 KIT from Sierra Pacific
Heavy Duty Three Point Door Latches for 1/2" Sq. Shaft
Lock with 33.25 [844.6] Connecting Rods

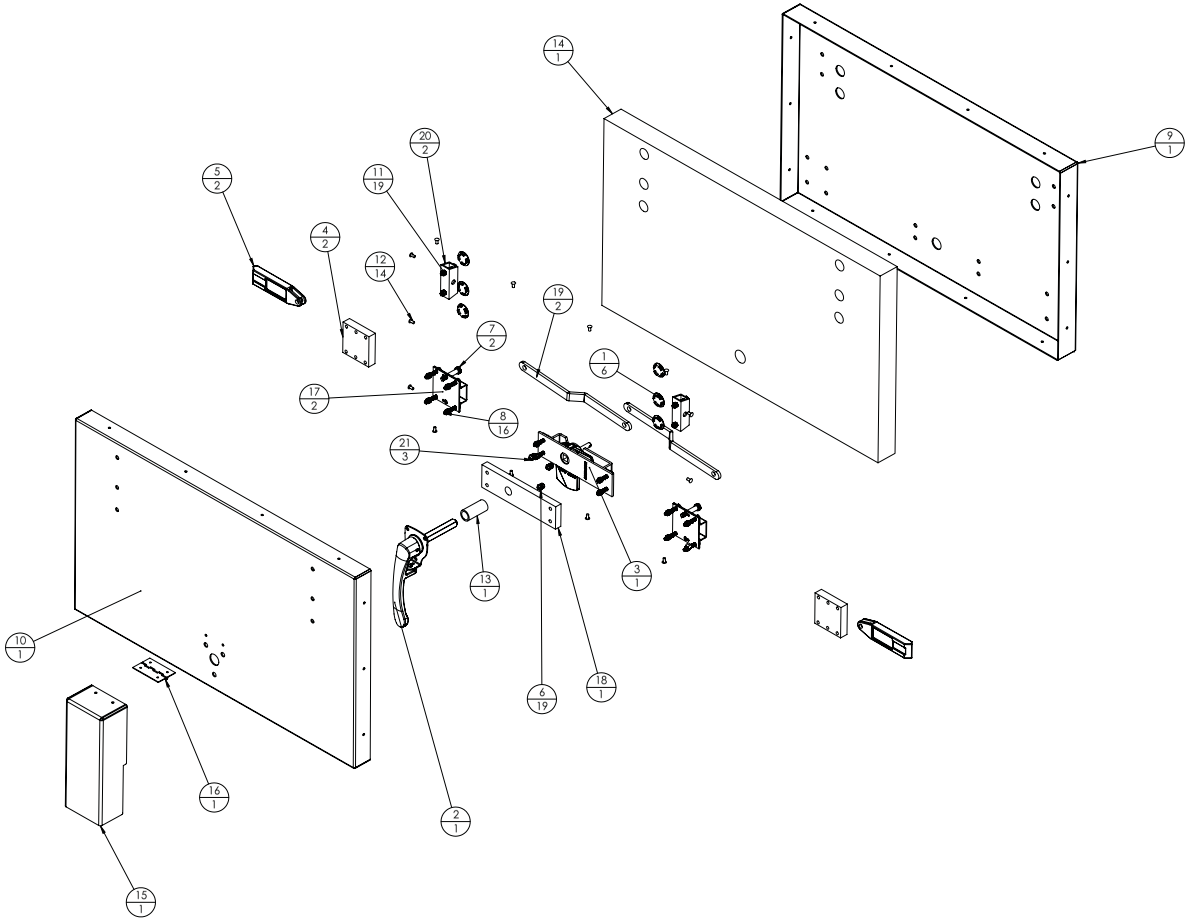

PROPRIETARY AND CONFIDENTIAL
THE INFORMATION CONTAINED IN THIS DRAWING IS THE SOLE PROPERTY OF the **Geological Survey of Canada (G.S.C)**. ANY REPRODUCTION IN PART OR AS A WHOLE WITHOUT THE WRITTEN PERMISSION OF THE **G.S.C.** IS PROHIBITED.

UNLESS OTHERWISE SPECIFIED:
DIMENSIONS ARE IN **INCHES**
TOLERANCES:
FRACTIONAL ±1/32
ANGULAR: MACH ±1 BEND ±1
TWO PLACE DECIMAL ±0.005
THREE PLACE DECIMAL ±0.001
INTERPRET GEOMETRIC TOLERANCING PER: **ASME Y14.5-2009**
MATERIAL
FINISH
DO NOT SCALE DRAWING

COMMENTS:

	NAME	DATE
DRAWN	DJP	2016-03-10
DESIGN	DJP	2016-03-03

TITLE: (CHIS) Mountaintop Kiosk
Instrument Door Assembly

SIZE **D** | DWG. NO. MTK203 | REV A-2.0
SCALE: 1:5 | SHEET 2 OF 2

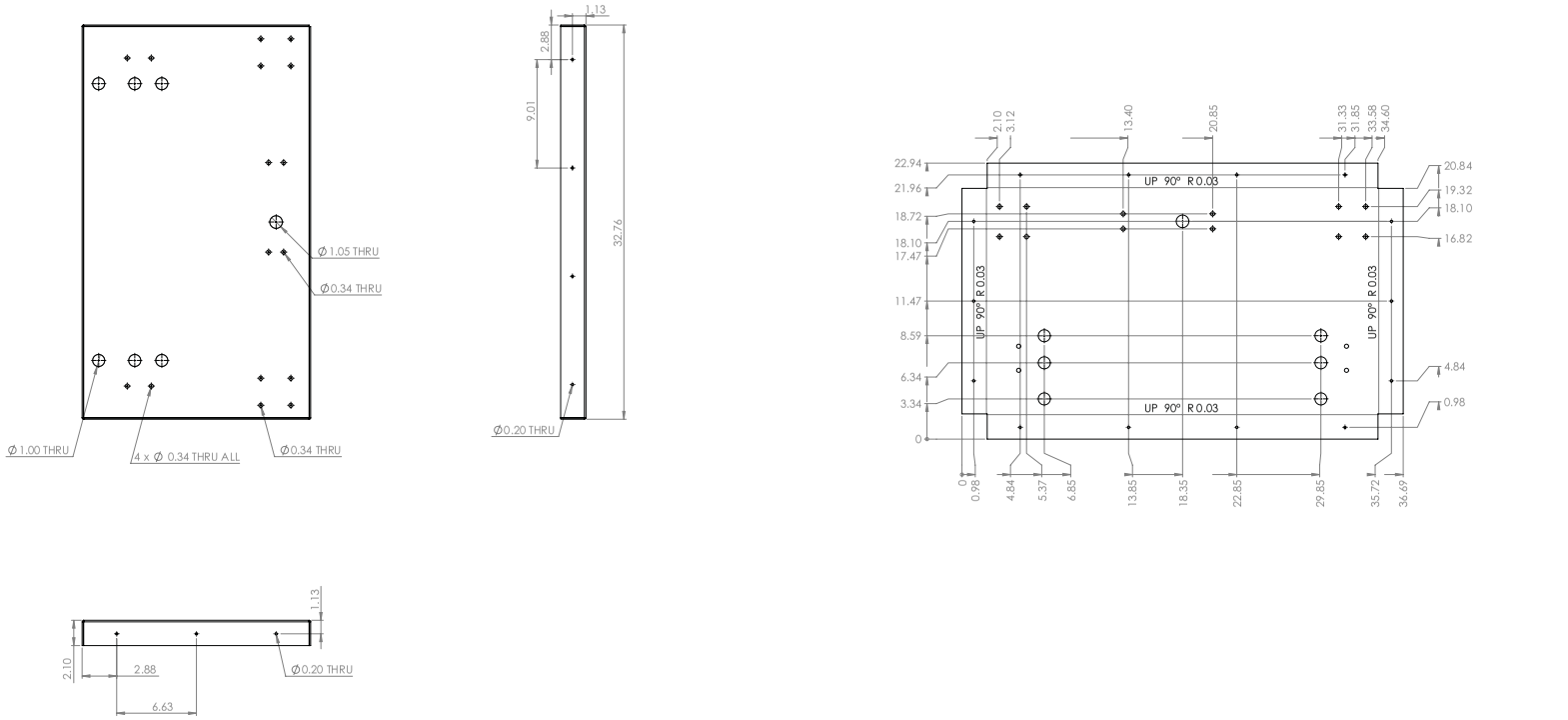

PROPRIETARY AND CONFIDENTIAL
THE INFORMATION CONTAINED IN THIS DRAWING IS THE SOLE PROPERTY OF the **Geological Survey of Canada (G.S.C)**. ANY REPRODUCTION IN PART OR AS A WHOLE WITHOUT THE WRITTEN PERMISSION OF THE **G.S.C.** IS PROHIBITED.

UNLESS OTHERWISE SPECIFIED:
DIMENSIONS ARE IN **INCHES**
TOLERANCES:
FRACTIONAL ±1/32
ANGULAR: MACH ±1 BEND ±1
TWO PLACE DECIMAL ±0.005
THREE PLACE DECIMAL ±0.001
INTERPRET GEOMETRIC TOLERANCING PER: **ASME Y14.5-2009**
MATERIAL
10 ga 5052-H32
FINISH
As Formed
DO NOT SCALE DRAWING

	NAME	DATE
DRAWN	DJP	2016-03-10
DESIGN	DJP	2016-03-01

COMMENTS

(CHIS) Mountaintop Kiosk

TITLE:
Instrument Door, Inner Skin

SIZE	DWG. NO.	REV
D	MTK105	A-2.0

SCALE: 1:5 | SHEET 1 OF 1

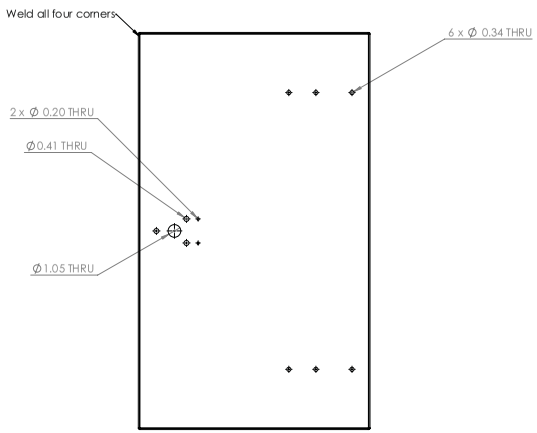

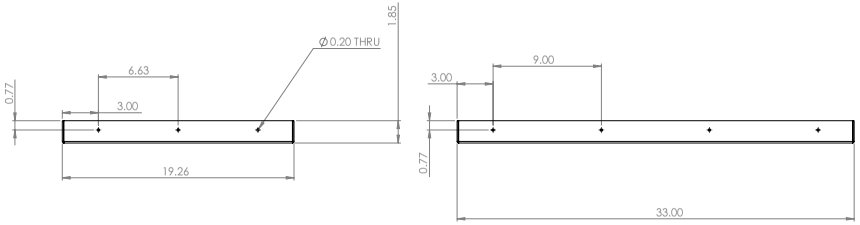

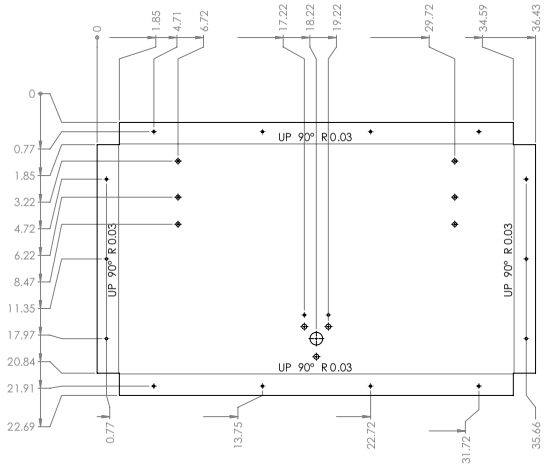

PROPRIETARY AND CONFIDENTIAL
THE INFORMATION CONTAINED IN THIS DRAWING IS THE SOLE PROPERTY OF the **Geological Survey of Canada (G.S.C)**. ANY REPRODUCTION IN PART OR AS A WHOLE WITHOUT THE WRITTEN PERMISSION OF THE **G.S.C.** IS PROHIBITED.

UNLESS OTHERWISE SPECIFIED:
DIMENSIONS ARE IN **INCHES**
TOLERANCES:
FRACTIONAL ±1/32
ANGULAR: MACH ±1 BEND ±1
TWO PLACE DECIMAL ±0.005
THREE PLACE DECIMAL ±0.001
INTERPRET GEOMETRIC TOLERANCING PER: **ASME Y14.5-2009**
MATERIAL
10 ga 5052-H32
FINISH
As Formed
DO NOT SCALE DRAWING

	NAME	DATE
DRAWN	DJP	2016-03-10
DESIGN	DJP	2016-03-01

COMMENTS

(CHIS) Mountain Top Kiosk

TITLE:
Instrument Door, Outer Skin

SIZE	DWG. NO.	REV
D	MTK106	A-2.0

SCALE: 1:5 SHEET 1 OF 1

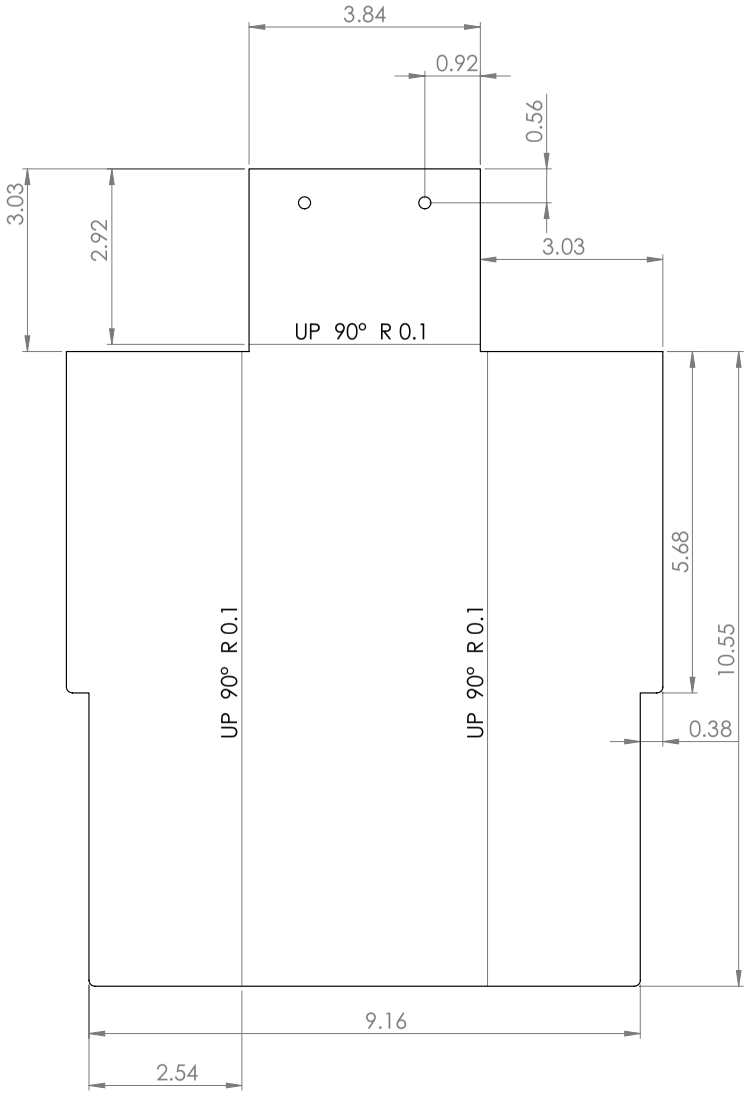

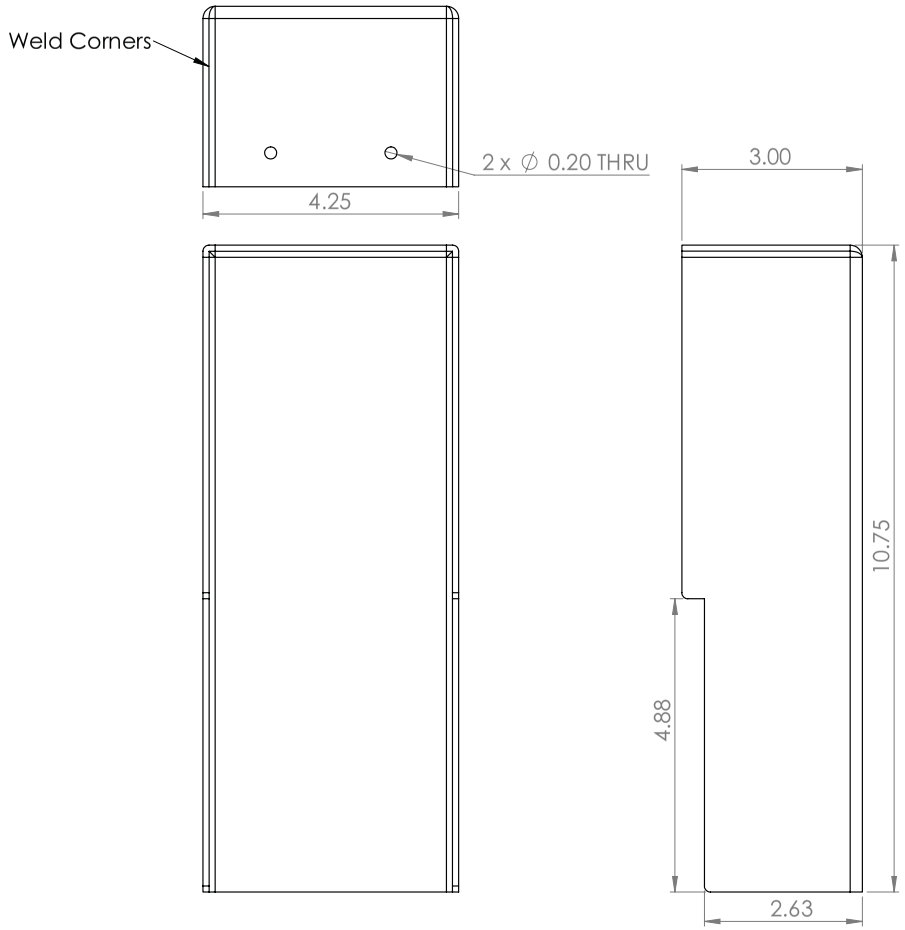

PROPRIETARY AND CONFIDENTIAL

THE INFORMATION CONTAINED IN THIS DRAWING IS THE SOLE PROPERTY OF the **Geological Survey of Canada (G.S.C)** ANY REPRODUCTION IN PART OR AS A WHOLE WITHOUT THE WRITTEN PERMISSION OF **G.S.C.** IS PROHIBITED.

GSC PACIFIC

UNLESS OTHERWISE SPECIFIED:

DIMENSIONS ARE IN **INCHES**
TOLERANCES:
FRACTIONAL: 1/32"
ANGULAR: MACH 0.1 BEND 0.1
TWO PLACE DECIMAL 0.005
THREE PLACE DECIMAL 0.001

INTERPRET GEOMETRIC TOLERANCING PER: **ASME Y14.5-2009**

MATERIAL
#10 ga 5052-H32

FINISH
As Formed

DO NOT SCALE DRAWING

	NAME	DATE
DRAWN	DJP	2016-03-13
DESIGN		

COMMENTS:

PROJECT (GROUP)
(CHIS) Mountaintop Kiosk

TITLE:
Latch Cover

SIZE	DWG. NO.	REV
B	MTK111	A-2.0

SCALE: 1:2 | SHEET 1 OF 1

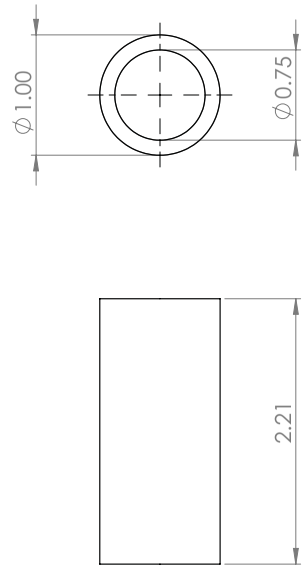

PROPRIETARY AND CONFIDENTIAL

THE INFORMATION CONTAINED IN THIS DRAWING IS THE SOLE PROPERTY OF the **Geological Survey of Canada (G.S.C)** ANY REPRODUCTION IN PART OR AS A WHOLE WITHOUT THE WRITTEN PERMISSION OF **G.S.C.** IS PROHIBITED.

GSC PACIFIC

UNLESS OTHERWISE SPECIFIED:

DIMENSIONS ARE IN **INCHES**
TOLERANCES:
FRACTIONAL: 1/32"
ANGULAR: MACH 0.1 BEND 0.1
TWO PLACE DECIMAL 0.005
THREE PLACE DECIMAL 0.001

INTERPRET GEOMETRIC TOLERANCING PER: **ASME Y14.5-2009**

MATERIAL
6061 Alloy

FINISH
As Cut

DO NOT SCALE DRAWING

	NAME	DATE
DRAWN	DJP	2016-03-13
DESIGN	DJP	2016-03-03

COMMENTS:

PROJECT (GROUP)
(CHIS) Mountaintop Kiosk

TITLE:
Handle Shaft Sleeve

SIZE	DWG. NO.	REV
B	MTK114	A-2.0

SCALE: 1:1 SHEET 1 OF 1

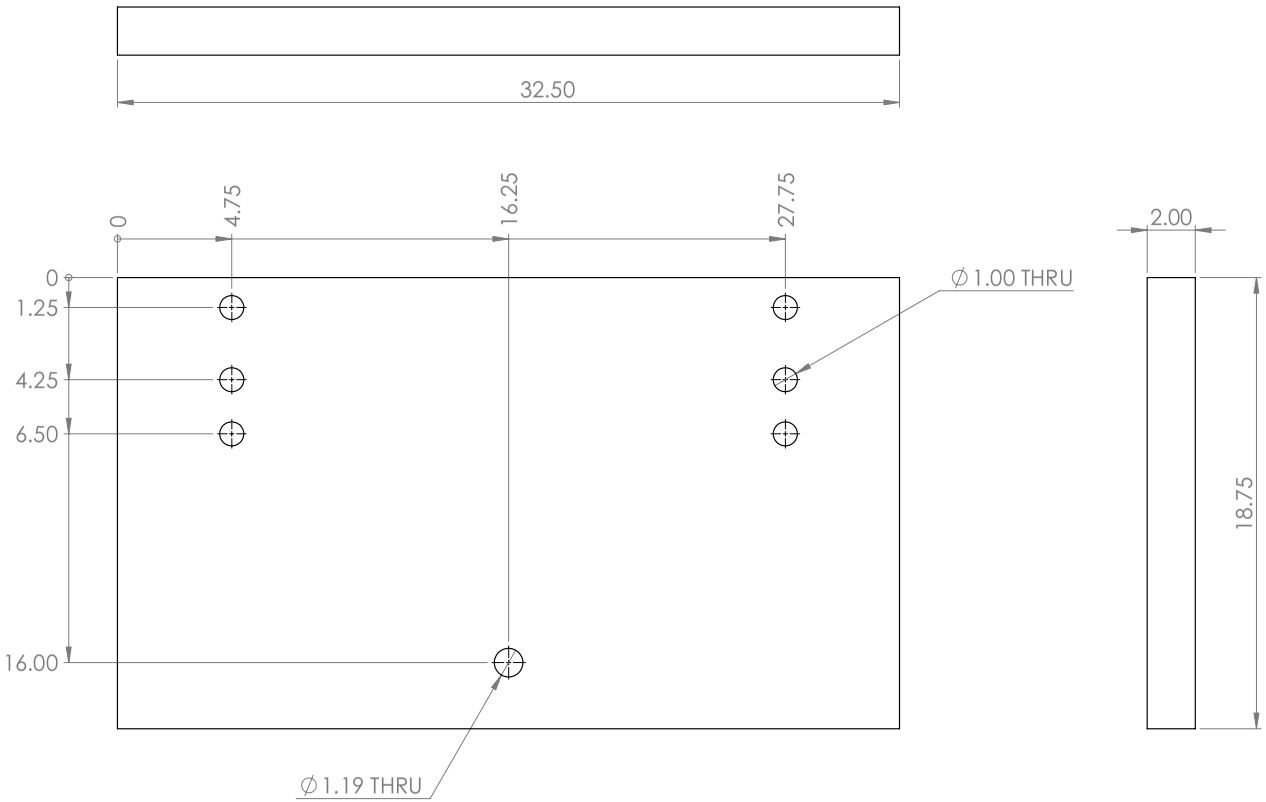

PROPRIETARY AND CONFIDENTIAL

THE INFORMATION CONTAINED IN THIS DRAWING IS THE SOLE PROPERTY OF the **Geological Survey of Canada (G.S.C)** ANY REPRODUCTION IN PART OR AS A WHOLE WITHOUT THE WRITTEN PERMISSION OF **G.S.C.** IS PROHIBITED.

GSC PACIFIC

Canada

UNLESS OTHERWISE SPECIFIED:

DIMENSIONS ARE IN **INCHES**
TOLERANCES:
FRACTIONAL: 1/32"
ANGULAR: MACH 0.1 BEND 0.1
TWO PLACE DECIMAL 0.005
THREE PLACE DECIMAL 0.001

INTERPRET GEOMETRIC TOLERANCING PER: **ASME Y14.5-2009**

MATERIAL: Polystyrene

FINISH: As Cut

DO NOT SCALE DRAWING

	NAME	DATE
DRAWN	DJP	2016-03-13
DESIGN	DJP	2016-03-03

COMMENTS:

PROJECT (GROUP): (CHIS) Mountain Top Kiosk

TITLE: Instrument Door Insulation

SIZE: B | DWG. NO.: MTK116 | REV: A-1.0

SCALE: 1:5 | SHEET 1 OF 1

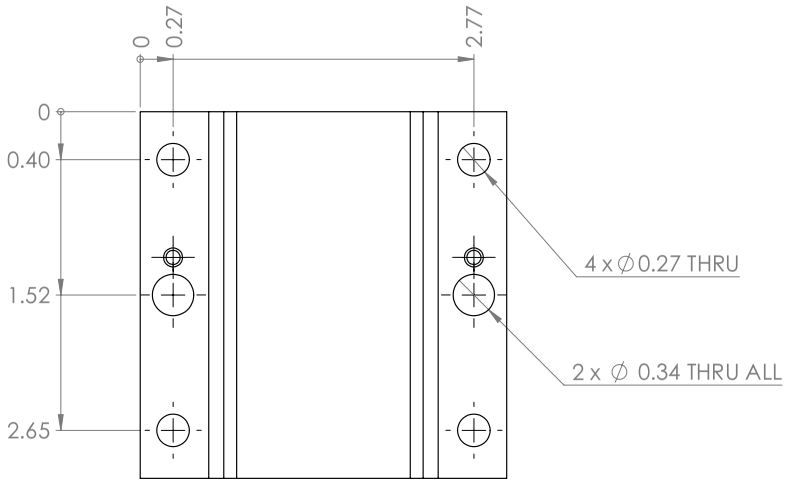

Drill Pattern for mounting

PROPRIETARY AND CONFIDENTIAL

THE INFORMATION CONTAINED IN THIS DRAWING IS THE SOLE PROPERTY OF the **Geological Survey of Canada (G.S.C)** ANY REPRODUCTION IN PART OR AS A WHOLE WITHOUT THE WRITTEN PERMISSION OF **G.S.C.** IS PROHIBITED.

GSC PACIFIC

UNLESS OTHERWISE SPECIFIED:

DIMENSIONS ARE IN **INCHES**
TOLERANCES:
FRACTIONAL: 1/32"
ANGULAR: MACH 0.1 BEND 0.1
TWO PLACE DECIMAL 0.005
THREE PLACE DECIMAL 0.001

INTERPRET GEOMETRIC TOLERANCING PER: **ASME Y14.5-2009**

MATERIAL

FINISH

DO NOT SCALE DRAWING

	NAME	DATE
DRAWN	DJP	2016-03-13
DESIGN		

COMMENTS:

PROJECT (GROUP) (CHIS) Mountain Top Kiosk

TITLE: Sierra End Bolt Housing w/ Drill Mods

SIZE	DWG. NO.	REV
B	MTK150	A-1.0

SCALE: 1:1 SHEET 1 OF 1

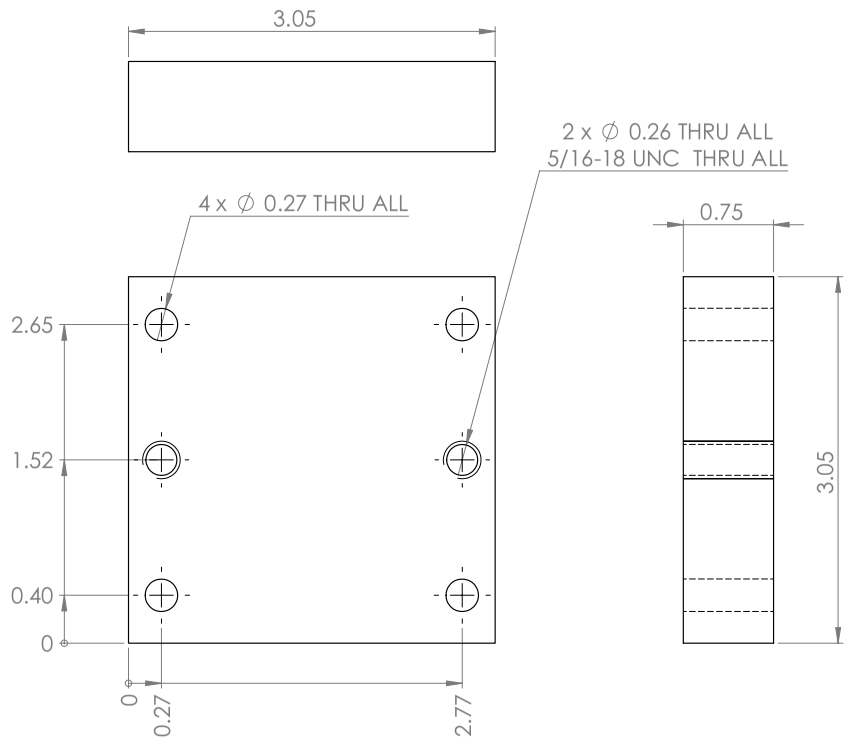

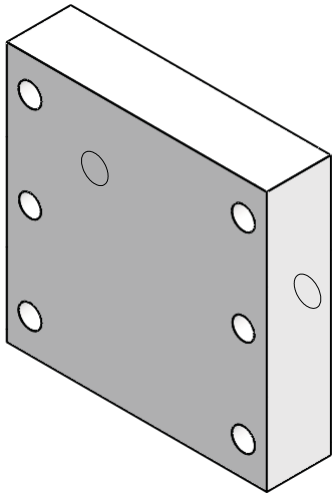

PROPRIETARY AND CONFIDENTIAL

THE INFORMATION CONTAINED IN THIS DRAWING IS THE SOLE PROPERTY OF the **Geological Survey of Canada (G.S.C)** ANY REPRODUCTION IN PART OR AS A WHOLE WITHOUT THE WRITTEN PERMISSION OF **G.S.C.** IS PROHIBITED.

GSC PACIFIC

Canada

UNLESS OTHERWISE SPECIFIED:

DIMENSIONS ARE IN **INCHES**
TOLERANCES:
FRACTIONAL: 1/32"
ANGULAR: MACH 0.1 BEND 0.1
TWO PLACE DECIMAL 0.005
THREE PLACE DECIMAL 0.001

INTERPRET GEOMETRIC TOLERANCING PER: **ASME Y14.5-2009**

MATERIAL: Delrin

FINISH: Architectural 3

DO NOT SCALE DRAWING

	NAME	DATE
DRAWN	DJP	2016-03-13
DESIGN	DJP	2016-03-01

COMMENTS:

PROJECT (GROUP): (CHIS) Mountain Top Kiosk

TITLE: Latch Spacer

SIZE: B | DWG. NO.: MTK154 | REV: A-1.0

SCALE: 1:1 | SHEET 1 OF 1

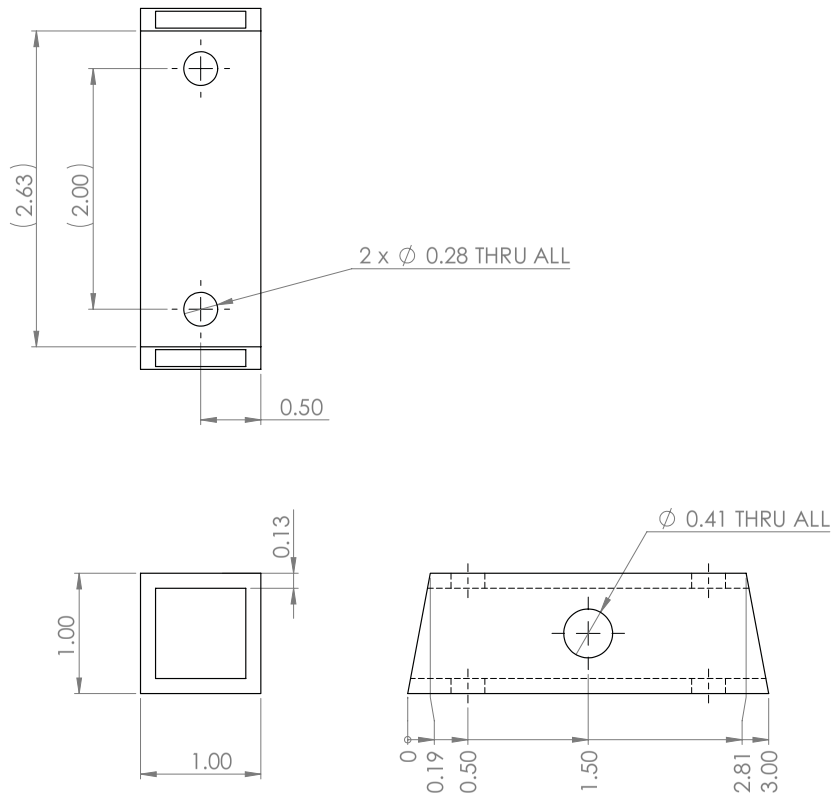

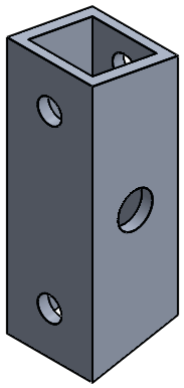

PROPRIETARY AND CONFIDENTIAL

THE INFORMATION CONTAINED IN THIS DRAWING IS THE SOLE PROPERTY OF the **Geological Survey of Canada (G.S.C)** ANY REPRODUCTION IN PART OR AS A WHOLE WITHOUT THE WRITTEN PERMISSION OF **G.S.C.** IS PROHIBITED.

GSC PACIFIC

Natural Resources Canada / Ressources naturelles Canada

UNLESS OTHERWISE SPECIFIED:

DIMENSIONS ARE IN **INCHES**
TOLERANCES:
FRACTIONAL: 1/32"
ANGULAR: MACH 0.1 BEND 0.1
TWO PLACE DECIMAL 0.005
THREE PLACE DECIMAL 0.001

INTERPRET GEOMETRIC TOLERANCING PER: **ASME Y14.5-2009**

MATERIAL: 6061 Alloy

FINISH

DO NOT SCALE DRAWING

	NAME	DATE
DRAWN	DJP	2016-09-15
DESIGN	DJP	2016-09-12

COMMENTS:

PROJECT (GROUP): (CHIS) Mountain Top Kiosk

TITLE: Prop Rod Pivot

SIZE: B | DWG. NO.: MTK182 | REV: A-1.0

SCALE: 1:1 | SHEET 1 OF 1

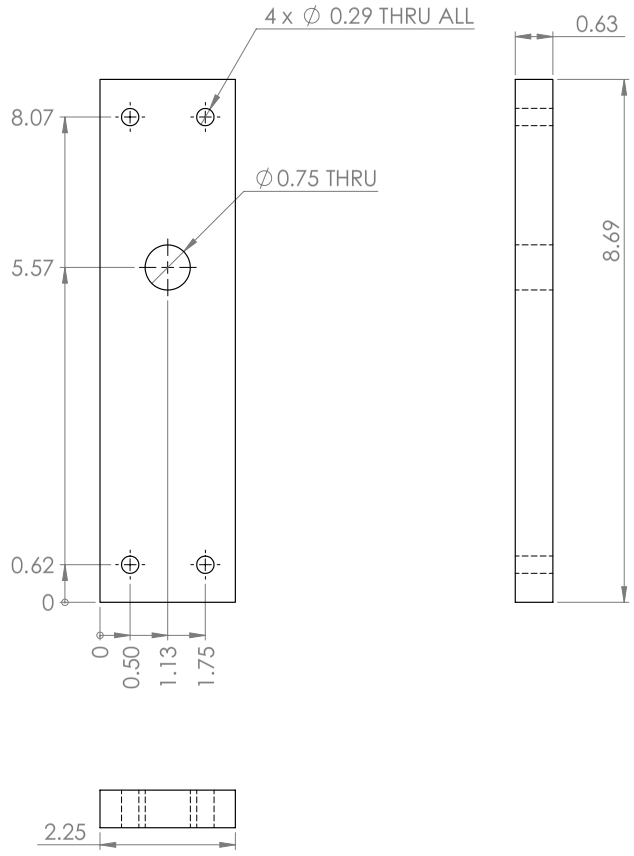

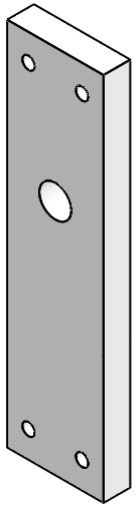

PROPRIETARY AND CONFIDENTIAL

THE INFORMATION CONTAINED IN THIS DRAWING IS THE SOLE PROPERTY OF the **Geological Survey of Canada (G.S.C)** ANY REPRODUCTION IN PART OR AS A WHOLE WITHOUT THE WRITTEN PERMISSION OF **G.S.C.** IS PROHIBITED.

GSC PACIFIC

Canada

UNLESS OTHERWISE SPECIFIED:

DIMENSIONS ARE IN **INCHES**
TOLERANCES:
FRACTIONAL: 1/32"
ANGULAR: MACH 0.1 BEND 0.1
TWO PLACE DECIMAL 0.005
THREE PLACE DECIMAL 0.001

INTERPRET GEOMETRIC TOLERANCING PER: **ASME Y14.5-2009**

MATERIAL
PVC Rigid

FINISH
Architectural 3

DO NOT SCALE DRAWING

	NAME	DATE
DRAWN	DJP	2016-03-13
DESIGN	DJP	2016-02-15

COMMENTS:

PROJECT (GROUP)
(CHIS) Mountain Top Kiosk

TITLE:
Latch Spacer Mid

SIZE	DWG. NO.	REV
B	MTK155	A-1.0

SCALE: 1:2 | SHEET 1 OF 1

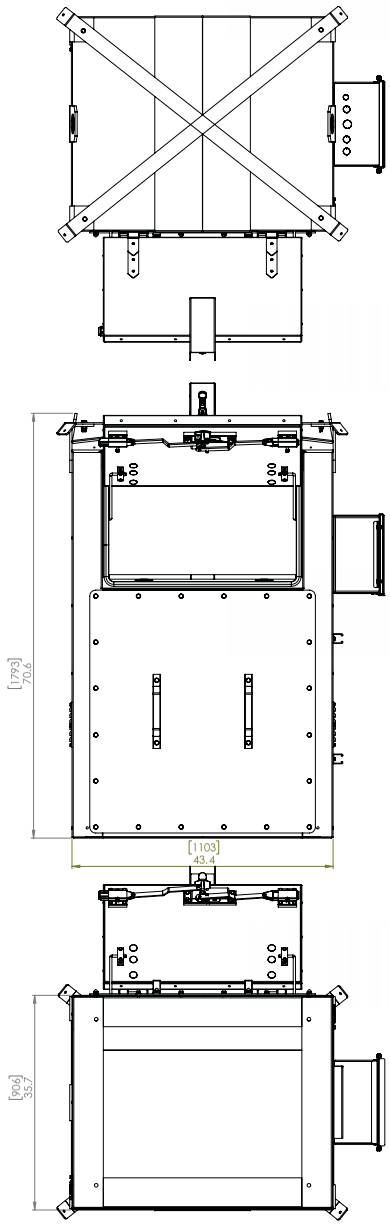

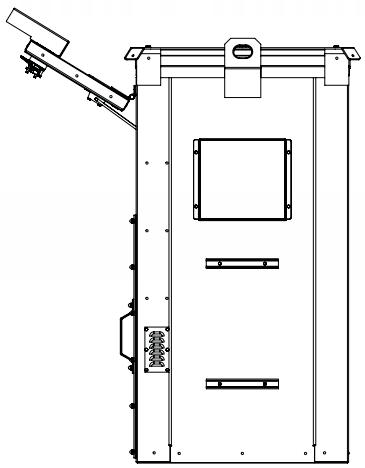

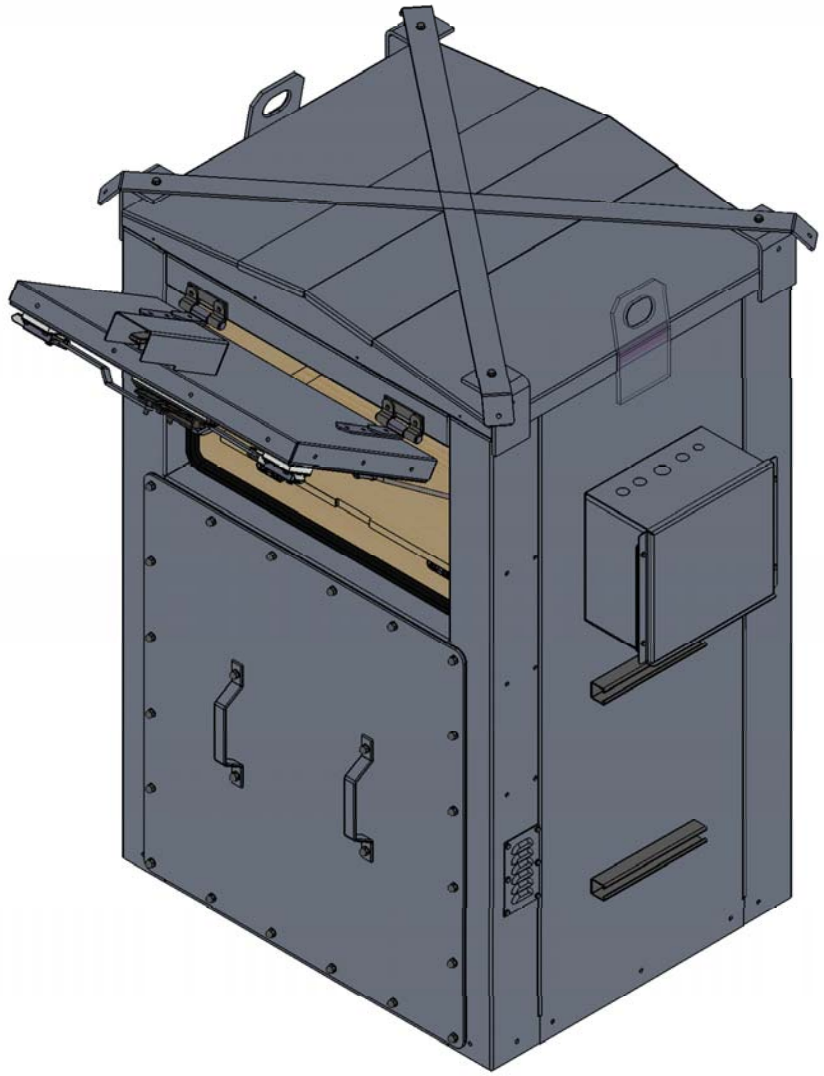

PROPRIETARY AND CONFIDENTIAL
THE INFORMATION CONTAINED IN THIS DRAWING IS THE SOLE PROPERTY OF THE **Geological Survey of Canada (G.S.C)**. ANY REPRODUCTION IN PART OR AS A WHOLE WITHOUT THE WRITTEN PERMISSION OF THE **G.S.C.** IS PROHIBITED.

UNLESS OTHERWISE SPECIFIED:
DIMENSIONS ARE IN **INCHES**
TOLERANCES:
FRACTIONAL ±1/32
ANGULAR: MACH ±1 BEND ±1
TWO PLACE DECIMAL ±0.005
THREE PLACE DECIMAL ±0.001
INTERPRET GEOMETRIC TOLERANCING PER: **ASME Y14.5-2009**
MATERIAL
FINISH
DO NOT SCALE DRAWING

COMMENTS:

	NAME	DATE
DRAWN	DJP	2016-03-13
DESIGN	XXX	XXX

(CHIS) Mountaintop Kiosk

TITLE:
Kiosk Parts Assembly

SIZE **D** | DWG. NO. MTK204C | REV A-2.0

SCALE: 1:10 | SHEET 1 OF 2

ITEM NO.	PART NUMBER	DESCRIPTION	desc3	QTY.
1	MTK201	Kiosk Main Frame Assembly		1
2	MTK202	Hatch Assembly		1
3	MTK203	Instrument Door Assembly		1
4	MTK110	Diagonal Strap Support		2
8	MTK 103L	RH side		1
9	MTK 103L	Prop rod tab LH		1
10	MTK 19206	Louver Cover plate		2
11	MTK108	Hatch Gasket		1
13	MTK 19202	, JCT BOX, 12X12X8, AL, KIOSK		1
14	MTK109C	Inner Bolting Bezel Assembly		1
17	MTK 19180	PT Shelf		1
18	MTK178	Back Wall Panel Upper		1
19	MTK179	PT Side panel		2
20	MTK180	PT Sliding Shelf		1
21	110A69	26" Drawer Slide 110A69	© 2013 McMaster-Carr Supply Company	2
22	MTK181	Back Wall Panel Lower		1
23	MTK 179	Door Bulb Seal		1
24	MTK157	Prop Rod		2
25	H1090A1	Strap Hinge Leaf		2
26	H1090A2	Strap Hinge Strap		2
27	3310T194	1-5/8" x 1-5/8" x 12" STRUT CHANNEL	© 2016 McMaster-Carr Supply Company	2
28	MTK205	Kiosk Foam Board Insulation		1

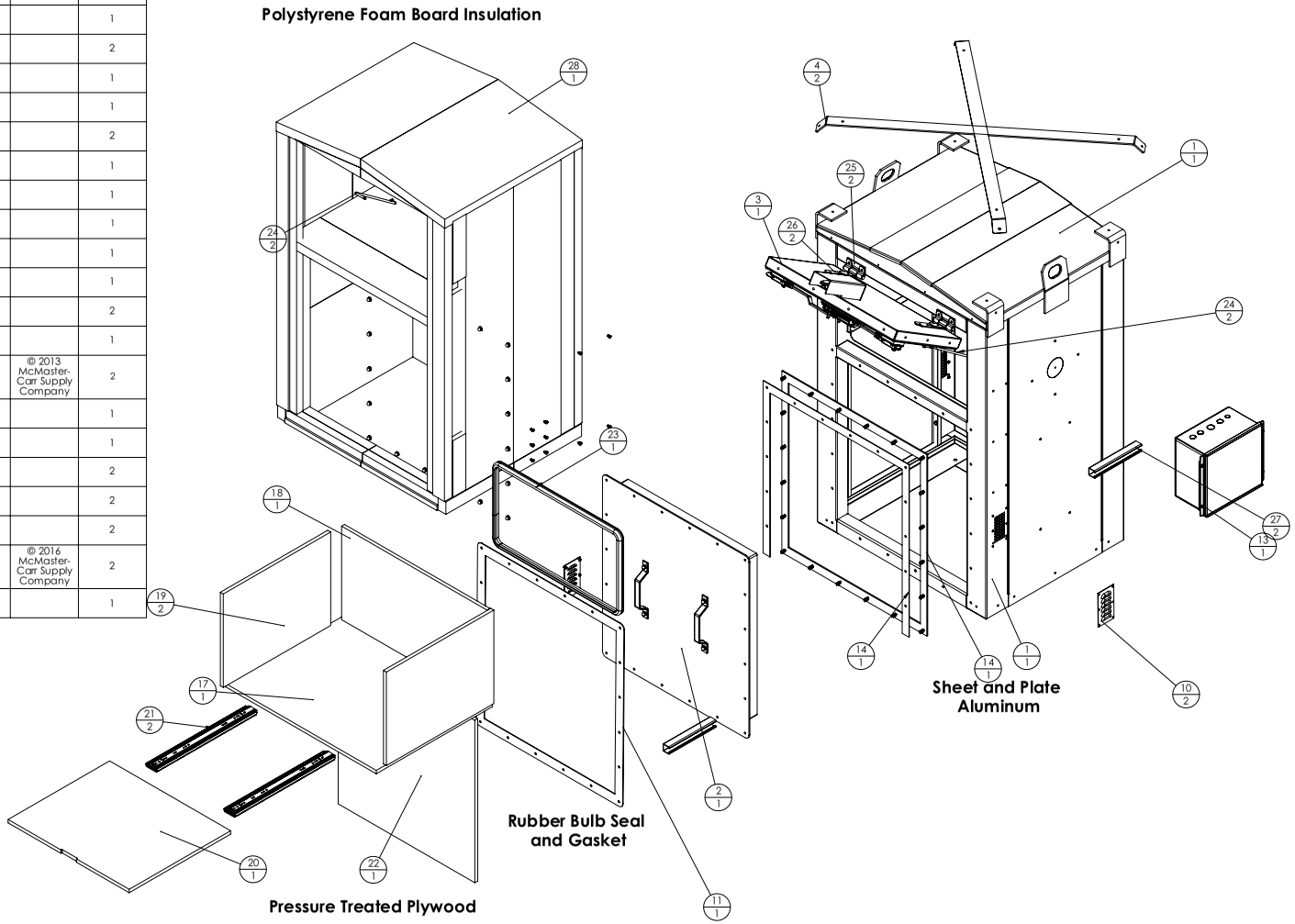

PROPRIETARY AND CONFIDENTIAL
THE INFORMATION CONTAINED IN THIS DRAWING IS THE SOLE PROPERTY OF the Geological Survey of Canada (G.S.C). ANY REPRODUCTION IN PART OR AS A WHOLE WITHOUT THE WRITTEN PERMISSION OF THE G.S.C. IS PROHIBITED.

UNLESS OTHERWISE SPECIFIED:
DIMENSIONS ARE IN INCHES
TOLERANCES:
FRACTIONAL ±1/32
ANGULAR: MACH ±1 BEND ±1
TWO PLACE DECIMAL ±0.005
THREE PLACE DECIMAL ±0.001
INTERPRET GEOMETRIC TOLERANCING PER: ASME Y14.5-2009
MATERIAL
FINISH
DO NOT SCALE DRAWING

	NAME	DATE
DRAWN	DJP	2016-03-15
DESIGN	XXX	XXX

COMMENTS

(CHIS) Mountaintop Kiosk

TITLE: Kiosk Parts Assembly

SIZE D | DWG. NO. MTK204C | REV A-2.0

SCALE: 1:10 | SHEET 2 OF 2

ITEM NO.	PART NUMBER	DESCRIPTION	QTY.
1	MTK160	2" Back Corner, Back Panel Foam	2
2	MTK164	2' Front Corners,Sides, Panel Foam	2
3	MTK173	1" VENT CHANNEL, Panel Foam	2
4	MTK162	2" Corner Side Above Vent, Panel Foam	2
5	MTK163	2" Front Covers, Front, Panel Foam	2
6	MTK174	2" Corner Side Below Vent, Panel Foam	2
7	MTK159	2" Lower Back and Front Panel Foam	6
8	MTK158	2" Lower Side panel Foam	4
9	MTK175	2" Ceiling , Panel Foam	2
10	MTK166	2' Peak (Right Triangle Shape), Panel Foam	4
11	MTK169	2" BACK 2nd Layer, Panel Foam	2
12	MTK167	2" BTM Sides 2nd Layer, Panel Foam	2
13	MTK168	2' UPPER Sides 2nd Layer, Panel Foam	2
14	MTK171	2" TOP FRONT 2nd Layer, Panel Foam	1
15	MTK170	2" TOP BACK 2nd Layer, Panel Foam	1
16	MTK177	2' Hatch Frame Sides Panel Foam	2
17	MTK186	2" Centrre Panel Foam	6

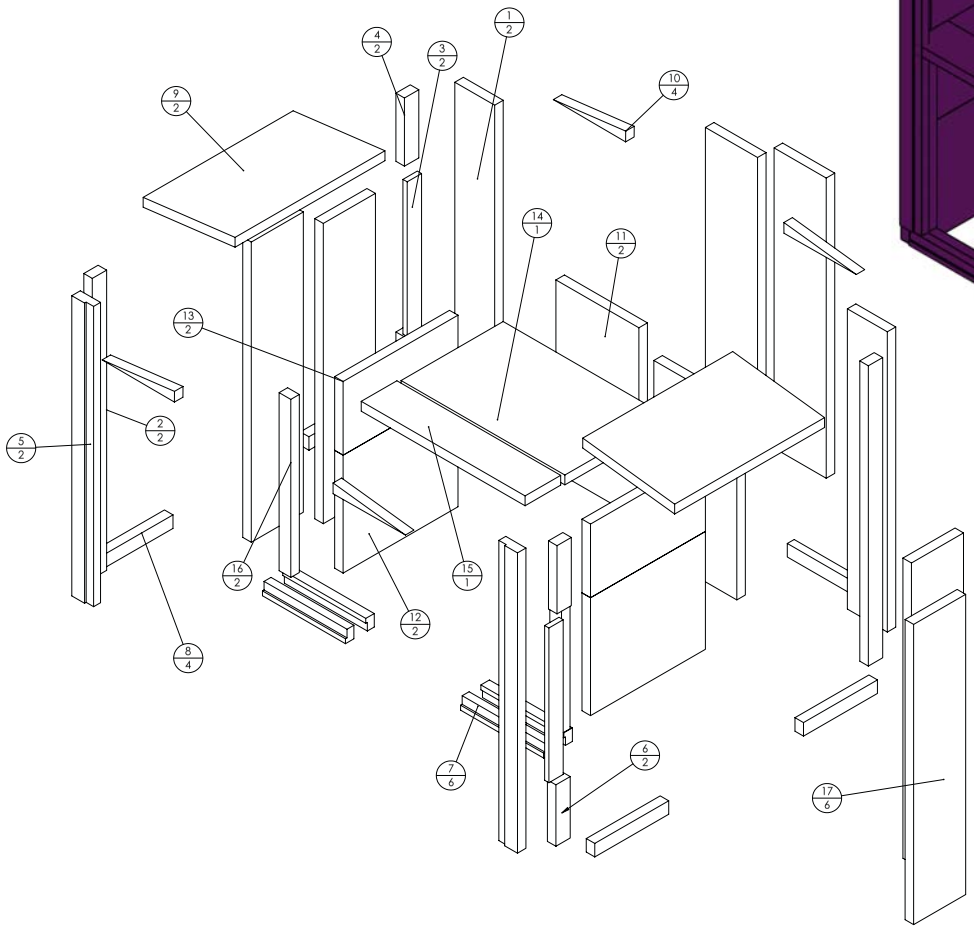

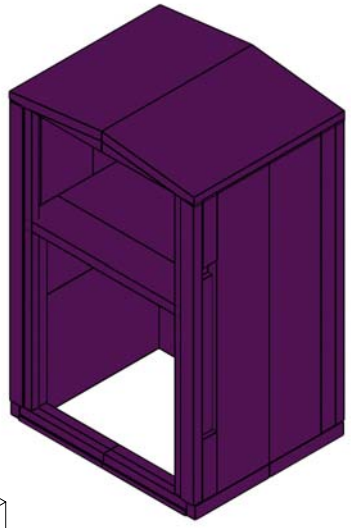

PROPRIETARY AND CONFIDENTIAL
THE INFORMATION CONTAINED IN THIS DRAWING IS THE SOLE PROPERTY OF the **Geological Survey of Canada (G.S.C)**. ANY REPRODUCTION IN PART OR AS A WHOLE WITHOUT THE WRITTEN PERMISSION OF THE **G.S.C.** IS PROHIBITED.

UNLESS OTHERWISE SPECIFIED:
DIMENSIONS ARE IN **INCHES**
TOLERANCES:
FRACTIONAL ±1/32
ANGULAR: MACH ±1 BEND ±1
TWO PLACE DECIMAL ±0.005
THREE PLACE DECIMAL ±0.001
INTERPRET GEOMETRIC TOLERANCING PER: **ASME Y14.5-2009**
MATERIAL
FINISH As Formed
DO NOT SCALE DRAWING

	NAME	DATE
DRAWN	DJP	2016-03-10
DESIGN	XXX	2016-03-01

COMMENTS

(CHIS) Mountain Top Kiosk

TITLE: Kiosk Foam Board Insulation

SIZE **D** | DWG. NO. MTK205 | REV A-2.0

SCALE: 1:10 | SHEET 1 OF 2

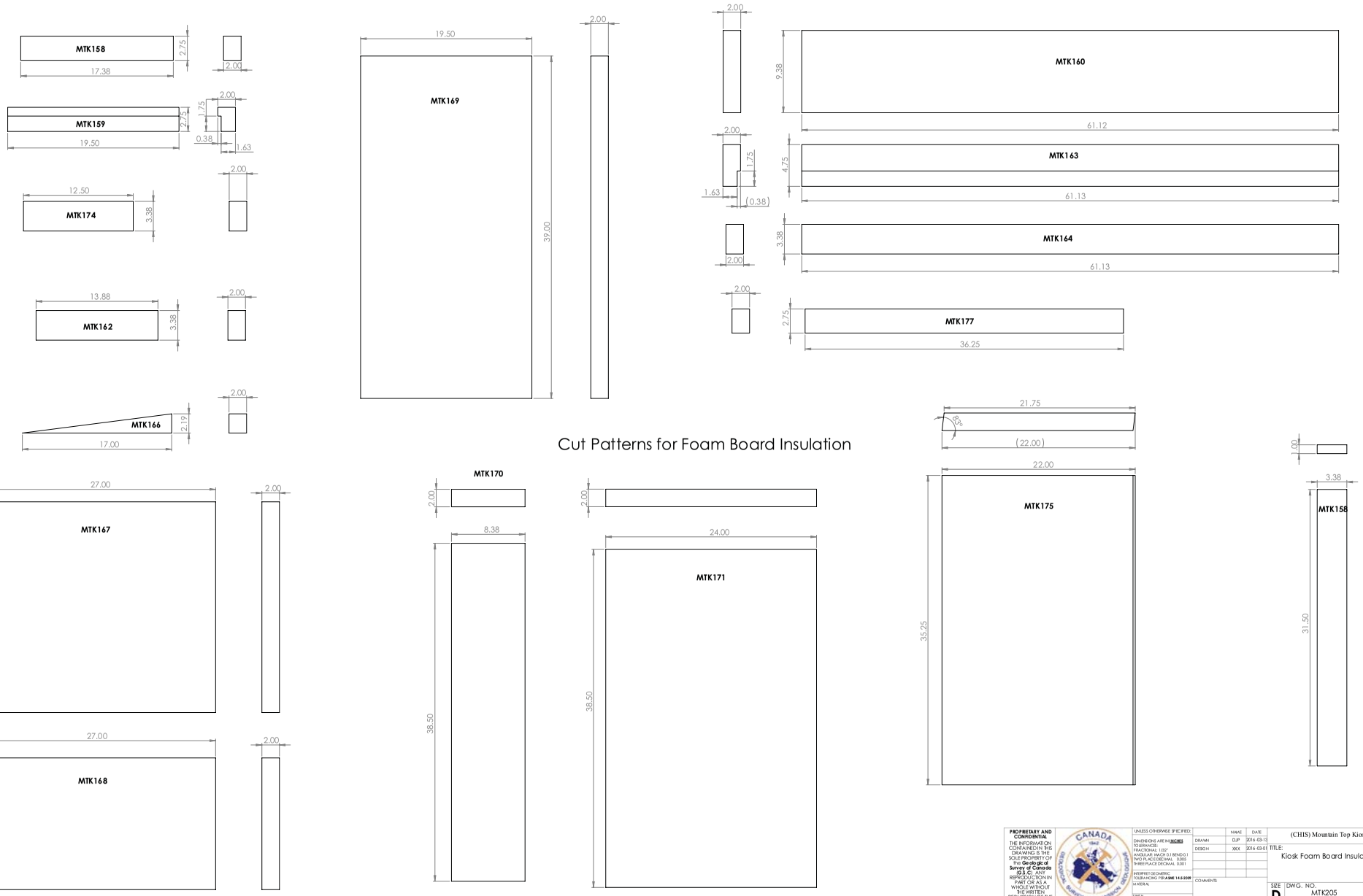

Cut Patterns for Foam Board Insulation

PROPRIETARY AND CONFIDENTIAL
THE INFORMATION CONTAINED IN THIS DRAWING IS THE SOLE PROPERTY OF THE Geological Survey of Canada (G.S.C). ANY REPRODUCTION IN PART OR AS A WHOLE WITHOUT THE WRITTEN PERMISSION OF THE G.S.C. IS PROHIBITED.

UNLESS OTHERWISE SPECIFIED:
DIMENSIONS ARE IN INCHES
TOLERANCES:
FRACTIONAL ±1/32
ANGULAR: MACH ±1 BEND ±1
TWO PLACE DECIMAL ±0.005
THREE PLACE DECIMAL ±0.001
INTERPRET GEOMETRIC TOLERANCING PER: ASME Y14.5-2009
MATERIAL
FINISH
As Formed
DO NOT SCALE DRAWING

	NAME	DATE
DRAWN	DJP	2016-03-10
DESIGN	XXX	2016-03-01

COMMENTS

(CHIS) Mountain Top Kiosk

TITLE:
Kiosk Foam Board Insulation

SIZE D | DWG. NO. MTK205 | REV A-2.0

SCALE: 1:5 | SHEET 2 OF 2