LEGEND

- PROPERTY LINE
- PROPOSED CONTOUR
- EXISTING CONTOUR
- LIMIT OF WORK
- CONSTRUCTION FENCE
- WOODEN FENCE
- SAN — SANITARY SEWER
- SW — STORM SEWER
- W — DOMESTIC WATER
- OVERHEAD ELEC.
- U/G ELECTRICAL
- COMMUNICATIONS
- SAN. MANHOLE
- CURB STOP
- CATCH BASIN
- POWER POLE

GENERAL NOTES

1. DIMENSIONS ARE IN METRIC UNITS UNLESS NOTED OTHERWISE.
2. ELEVATIONS ARE REFERENCED FROM A BENCHMARK CONTROL POINT 3534 ELEVATION 56.661m.
3. THE DEPARTMENTAL REPRESENTATIVE, BELL–ALIANT, AND MARITIME ELECTRIC SHALL BE CONTACTED PRIOR TO THE START OF CONSTRUCTION TO COORDINATE FIELD LOCATES OF SERVICES BEFORE STARTING CONSTRUCTION.
4. ALL EXISTING INVERTS TO BE CONFIRMED PRIOR TO PIPE LAYING.
5. ALL CUT/FILL SLOPES TO BE MAX 3H : 1V AND STABILIZED WITH 150mm TOPSOIL, SEED AND STRAW MULCH UNLESS OTHERWISE INDICATED.
6. REINSTATE DISTURBED SURFACES WITH MATERIALS AND THICKNESSES TO MATCH EXISTING.

ABBREVIATIONS

FA	FINISHED ASPHALT	CB	CATCH BASIN
FG	FINISHED GRADE	BOT	BOTTOM OF SUMP
INV	INVERT	EL	ELEVATION
EX	EXISTING	POC	POINT OF CONNECTION
MH	MANHOLE	N.I.C.	NOT IN CONTRACT
I.D.	INSIDE DIAMETER	FFE	FINISHED FLOOR ELEVATION

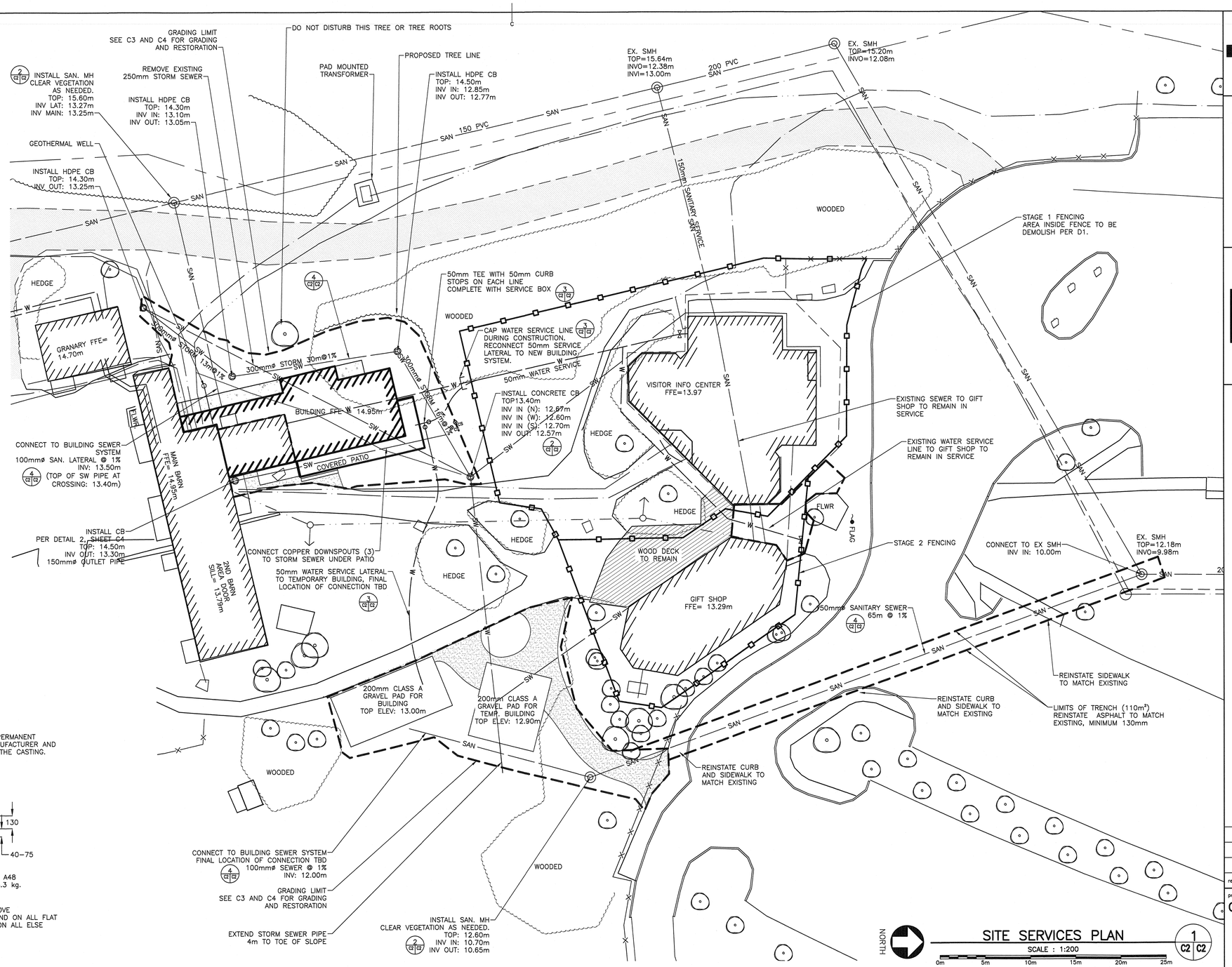

SITE SERVICES PLAN

SCALE : 1:200

0m 5m 10m 15m 20m 25m

1 C2 C2

CATCH BASIN COVER – #411 – GRATED

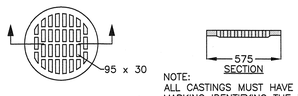

NOTE:
ALL CASTINGS MUST HAVE A PERMANENT MARKING IDENTIFYING THE MANUFACTURER AND MAKE AN MODEL NUMBER OF THE CASTING.

FRAME – #411W

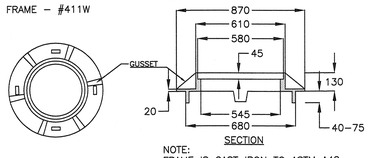

NOTE:
FRAME IS CAST IRON TO ASTM A48 CLASS 30 MINIMUM WEIGHT 95.3 kg.

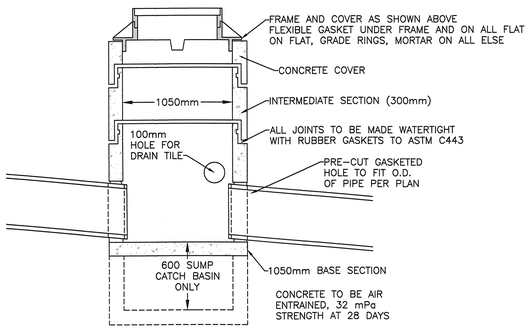

CATCH BASIN/MANHOLE DETAIL

SCALE : 1:20

0mm 500mm 1000mm 1500mm 2000mm 2500mm

2 C2 C2

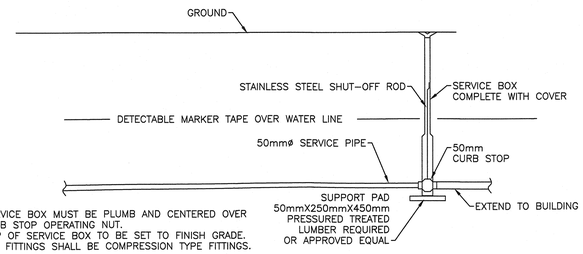

NOTE:
1. SERVICE BOX MUST BE PLUMB AND CENTERED OVER CURB STOP OPERATING NUT.
2. TOP OF SERVICE BOX TO BE SET TO FINISH GRADE.
3. ALL FITTINGS SHALL BE COMPRESSION TYPE FITTINGS.

WATER SERVICE PIPE DETAIL

SCALE : 1:25

0mm 500mm 1000mm 1500mm 2000mm 2500mm

3 C2 C2

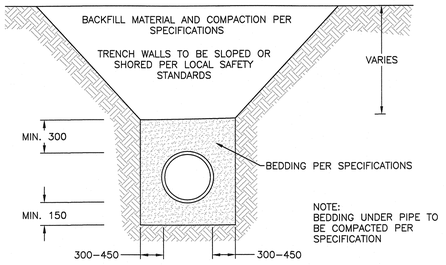

NOTE:
BEDDING UNDER PIPE TO BE COMPACTED PER SPECIFICATION

TYPICAL PIPE TRENCH DETAIL

SCALE : 1:25

0mm 500mm 1000mm 1500mm 2000mm 2500mm

4 C2 C2

Public Works and Government Services Canada / Travaux Publics et Services gouvernementaux Canada

root ARCHITECTURE

CBCL LIMITED Consulting Engineers

PROFESSIONAL ENGINEER Jody L. MacLeod No. 572 PRINCE EDWARD ISLAND

revisions		date
2	ISSUED FOR TENDER	11.29 2016
1	100% SUBMISSION	11.23 2016
0	99% SUBMISSION	11.8 2016

project / projet
GREEN GABLES–PHASE 1 BARN EXPANSION AND RENOVATION
QUEENS CO., PEI

drawing / dessin
CIVIL/LANDSCAPE SITE SERVICES PLAN

designed BST / conçu
date NOV 2016
drawn BST / dessiné
date NOV 2016
approved / approuvé
date
Tender / Soumission
PWGSC Project Manager / Administrateur de projets TPSGC
project number / no. du projet
R.081199.001
drawing no. / no. du dessin
C02 of 4