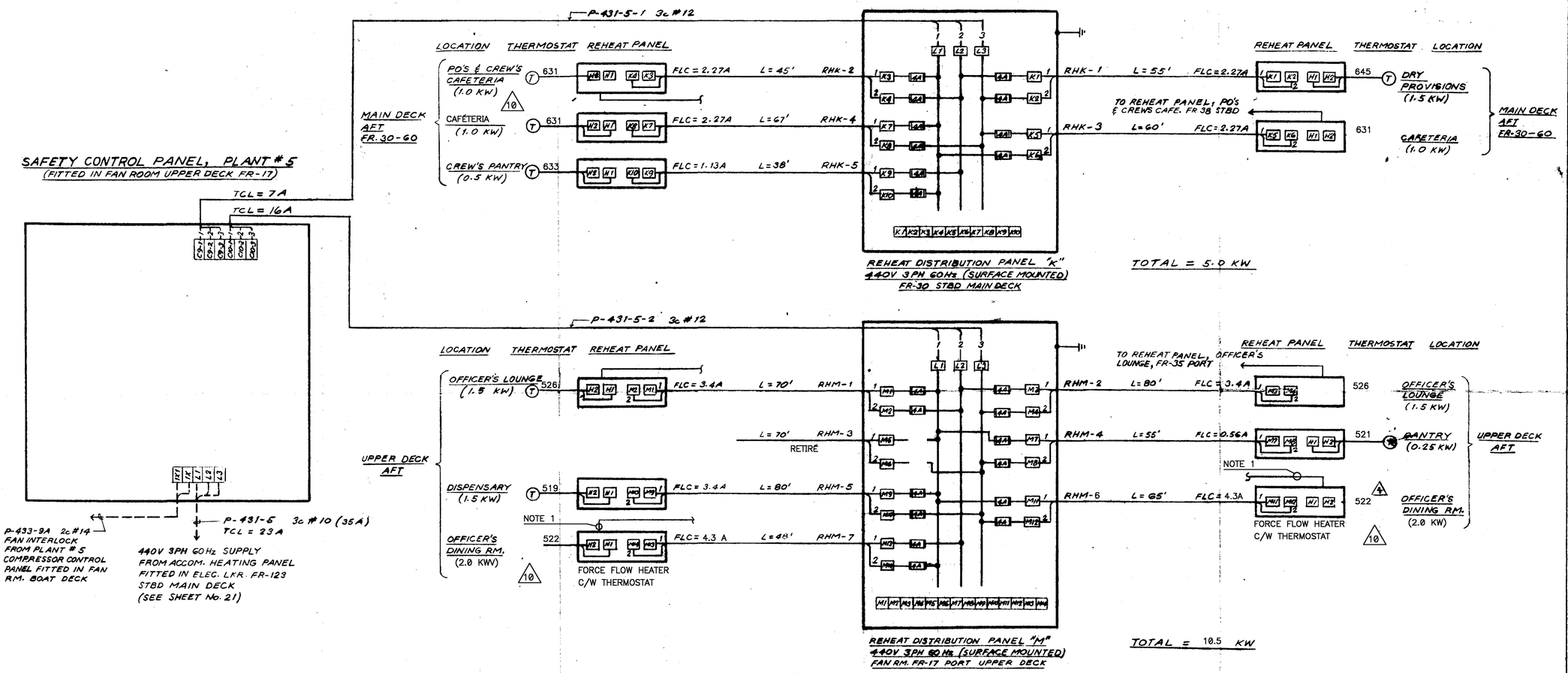

NOTE 1: ALL THERMOSTAT CABLE ARE STILL THERE BETWEEN BOTH UNITS AND THERMOSTAT.

NOTES:

1. CABLES TO THERMOSTATS TO BE 2c#14. ALL OTHER CABLES ARE 3c#14 A.W.G. CROSS-LINKED POLYETHYLENE P.V.C. BRONZE BRAID ARMOUR UNLESS OTHERWISE INDICATED.
2. FOR A/C VENTILATION AND HEATING SYSTEM DECK PLAN, SEE DWG. No. 221-900-7 SHEET 1 & 2.
3. FOR TYPICAL CABIN REHEAT PANEL CONNECTION DIAGRAM, SEE SHEET No. 31.
4. THE #3 CONDUCTOR FOR REHEAT CIRCUITS SHALL BE UTILIZED AS THE GROUND WIRE AND IDENTIFIED AS SUCH AT EACH TERMINATION BY A PERMANENTLY INSTALLED PLASTIC SLEEVE. THE TERMINATION AT THE REHEAT DISTRIBUTION PANEL SHALL BE AT THE GROUND BAR SUPPLIED WHICH SHALL HAVE AN ELECTRICAL CONDUCTOR POSITIVELY GROUNDED TO THE SHIP'S STRUCTURE.

No.	REVISION	BY	DATE
10	AS FITTED	GAD	03/05
9	DRAWING MADE AS FITTED HULL 221	G. LEE	2[illegible]
4	THERMOSTAT REMOVED FROM RHM-6	N.W.	16[illegible]
3	ONE OF REHEATER PANELS IN OFFICERS LOUNGE, TRANSFORMER REMOVED & CONNECTIONS CHANGED.	G. LEE	25[illegible]
1	CABLES FROM DISTRIBUTION PANELS TO REHEAT PANELS CHANGED TO [illegible]	JRP	1[illegible]

APPROVALS		REPRESENT'V.	DATE		REPRESENT'V.	
	M.O.T.	L. LENNOX	11-5-76	C.S.I. LLOYDS	N. SIGSWORTH F. S. MORT	30[illegible] 19[illegible]

DRAWN	CHECKED	APPROVED	DATE
JRP	[illegible]	[illegible]	4/12

HULL-221 DWG. No. 221-900-8 SHT. #32

SYSTEM:
A/C VENT'N. & ACCOMM'N. HEATING SYSTEM PLANT No.5 E.W. DIAGRAM