Public Works and Government Services Canada | Travaux publics et Services gouvernementaux Canada

RETURN BIDS TO:
RETOURNER LES SOUMISSIONS À:

Bid Receiving Public Works and Government Services Canada/Réception des soumissions Travaux publics et Services gouvernementaux Canada
Pacific Region
401 - 1230 Government Street
Victoria, B.C.
V8W 3X4
Bid Fax: (250) 363-3344

SOLICITATION AMENDMENT
MODIFICATION DE L'INVITATION

The referenced document is hereby revised; unless otherwise indicated, all other terms and conditions of the Solicitation remain the same.

Ce document est par la présente révisé; sauf indication contraire, les modalités de l'invitation demeurent les mêmes.

Comments - Commentaires

Vendor/Firm Name and Address
Raison sociale et adresse du fournisseur/de l'entrepreneur

Issuing Office - Bureau de distribution
Public Works and Government Services Canada - Pacific Region
401 - 1230 Government Street
Victoria, B. C.
V8W 3X4

Title - Sujet Mountain Kiosks for Seismic Equip	
Solicitation No. - N° de l'invitation 23490-170668/A	**Amendment No. - N° modif.** 004
Client Reference No. - N° de référence du client 23490-170668	**Date** 2016-12-12
GETS Reference No. - N° de référence de SEAG PW-$VIC-249-7111	
File No. - N° de dossier VIC-6-39133 (249)	**CCC No./N° CCC - FMS No./N° VME**
Solicitation Closes - L'invitation prend fin **at - à 02:00 PM** **on - le 2016-12-27**	**Time Zone** **Fuseau horaire** Pacific Standard Time PST
F.O.B. - F.A.B. **Plant-Usine:** ☐ **Destination:** ☑ **Other-Autre:** ☐	
Address Enquiries to: - Adresser toutes questions à: Cress, Christine	**Buyer Id - Id de l'acheteur** vic249
Telephone No. - N° de téléphone (250) 363-8442 ( )	**FAX No. - N° de FAX** ( ) -
Destination - of Goods, Services, and Construction: **Destination - des biens, services et construction:** DEPARTMENT OF NATURAL RESOURCES 9860 WEST SAANICH ROAD SIDNEY British Columbia V8L 5T5 Canada	

Instructions: See Herein

Instructions: Voir aux présentes

Delivery Required - Livraison exigée See Herein	**Delivery Offered - Livraison proposée**
Vendor/Firm Name and Address **Raison sociale et adresse du fournisseur/de l'entrepreneur** **Telephone No. - N° de téléphone** **Facsimile No. - N° de télécopieur**	
Name and title of person authorized to sign on behalf of Vendor/Firm (type or print) **Nom et titre de la personne autorisée à signer au nom du fournisseur/ de l'entrepreneur (taper ou écrire en caractères d'imprimerie)** **Signature**	**Date**

Canada

This Amendment 004 to the Solicitation is raised to address the following Bidder inquiries and to attach additional drawings to Appendix 1 to Annex “A”.

QUESTIONS:

1. For clarification, this RFQ is to supply completed units as detailed on drawing MTK204C?
2. Is the kiosk insulation to be fastened with Sikaflex 291 the same as the door insulation?
3. Can the ¾” good one side pressure treated plywood be substituted with regular ¾” pressure treated plywood or could we use standard ¾” GOS and treat it with wood preservative?
4. Are all parts supplied bare material with no paint or powder coat?
5. Some parts are detailed as a #4 finish which is typically for aesthetics. Can these parts be supplied with a standard bare material finish same as the rest of the parts?
6. Can you provide details for the diagonal strap support, Part number MTK110?
7. Does this enclosure need to be rated? (i.e. Nema 3R or some other rating)
8. Certifications were mentioned in the original RFP but I didn’t see any specified. Does this kiosk need to meet any certifications?
9. Does the welding need to be CWB certified?

ANSWERS:

1) Yes, the request if for complete assembled units per MTK204C and related drawings.
2) Yes, Sikaflex 291 adhesive for all.
3) Either alternative is acceptable.
4) No special finish is required (mill finish)
5) No special finish is required (mill finish), in spite of the detail
6) See attached
7) No particular rating is required.
8) No technical certifications are required. The Bidder must build to the drawings only – no additional technical certifications are necessary.
9) No welding certification is required.

<u>ALL OTHER TERMS AND CONDITIONS REMAIN UNCHANGED.</u>

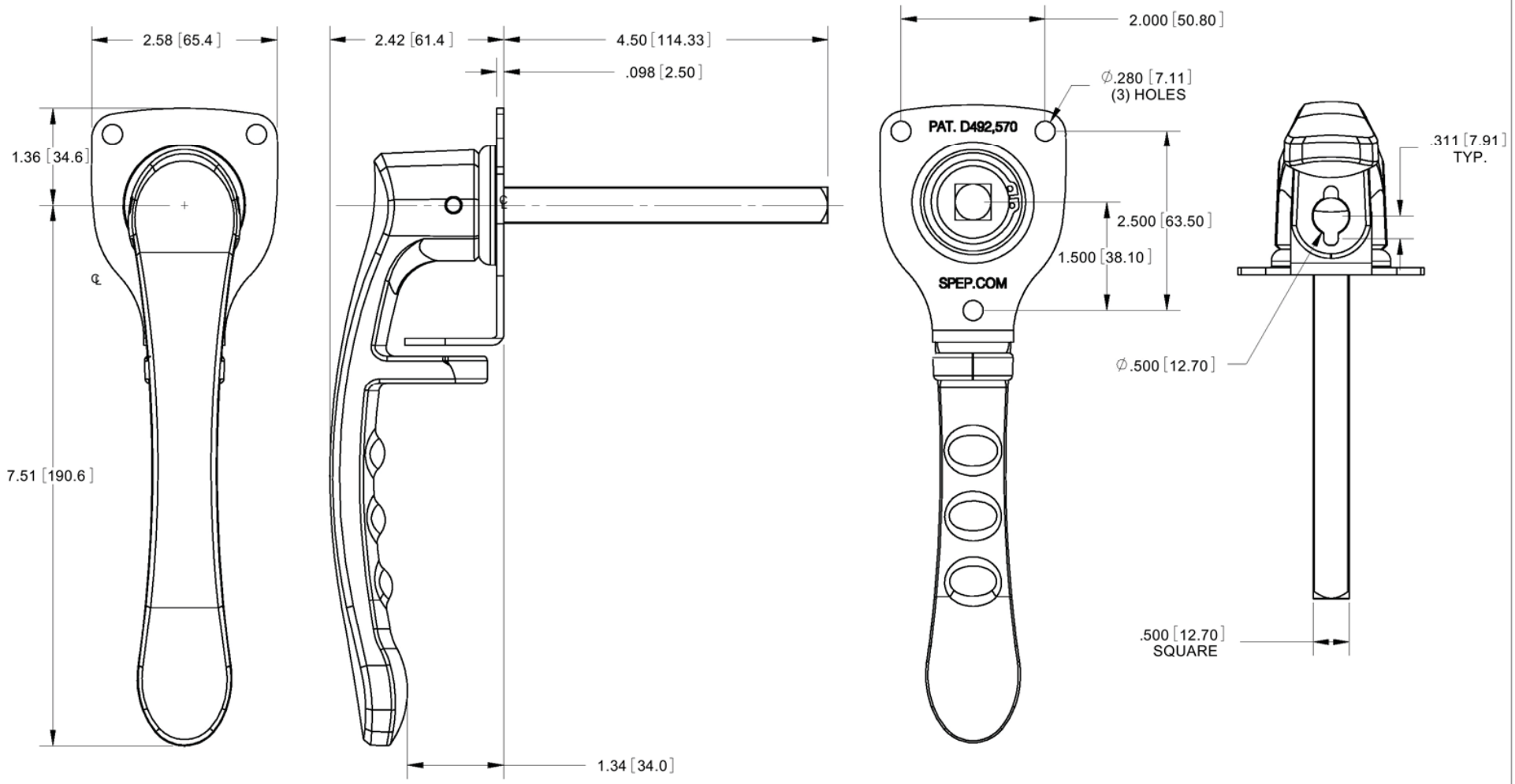

NOTES:

1. PART IS ROHS COMPLIANT.
2. DIMENSIONS IN BRACKETS ARE IN METRIC.

SIERRA PACIFIC

ENGINEERING AND PRODUCTS © SPEP.COM

CONFIDENTIAL PROPRIETARY INFORMATION | PLOT DATE: 10/2/2009

This document contains information that is the confidential and proprietary property of SPEP and may not be copied, published, or disclosed to others, or used for any purpose other than review, without the express written authorization of an authorized officer of SPEP. This document must be kept only in SPEP's confidential files when not in use.

UNSPECIFIED TOLERANCES

ANGLES: ±3°

INCHES		MM	
.XX	±.030	.X	±.76
.XXX	±.015	.XX	±.38
.XXXX	±.005	.XXX	±.13

MATERIAL:	STAINLESS STEEL
FINISH:	PASSIVATED
UNITS:	INCHES
SCALE:	1:1
	THIRD ANGLE PROJECTION
WEIGHT:	2.473
SIZE:	A
SHEET	1 OF 1
DWG. NO.	17461-310-SS-PS

PART NUMBER:	**310-SS-PS**
DESCRIPTION:	LARGE PADLOCKING L-HANDLE .500 SQUARE SHAFT

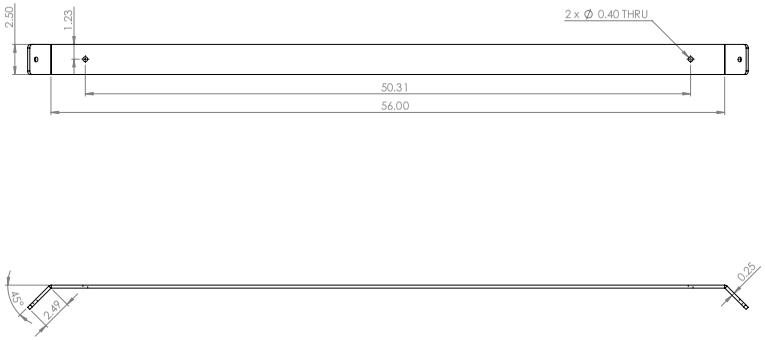

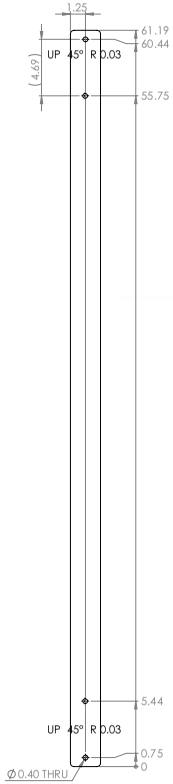

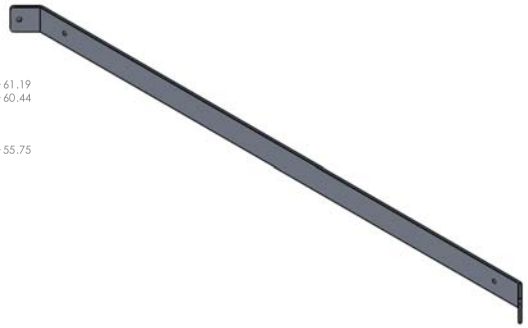

PROPRIETARY AND CONFIDENTIAL
THE INFORMATION CONTAINED IN THIS DRAWING IS THE SOLE PROPERTY OF the **Geological Survey of Canada (G.S.C)**. ANY REPRODUCTION IN PART OR AS A WHOLE WITHOUT THE WRITTEN PERMISSION OF THE **G.S.C.** IS PROHIBITED.

UNLESS OTHERWISE SPECIFIED:
DIMENSIONS ARE IN **INCHES**
TOLERANCES:
FRACTIONAL ±1/32
ANGULAR: MACH ±1 BEND ±1
TWO PLACE DECIMAL ±0.005
THREE PLACE DECIMAL ±0.001
INTERPRET GEOMETRIC TOLERANCING PER: **ASME Y14.5-2009**
MATERIAL 5052-H32
FINISH #4 Arch
DO NOT SCALE DRAWING

	NAME	DATE
DRAWN	DJP	2016-03-10
DESIGN	DJP	2016-03-03

COMMENTS

(CHIS) Mountaintop Kiosk

TITLE: Diagonal Strap Support

SIZE **D** | DWG. NO. MTK110 | REV A-1.0

SCALE: 1:5 | SHEET 1 OF 1

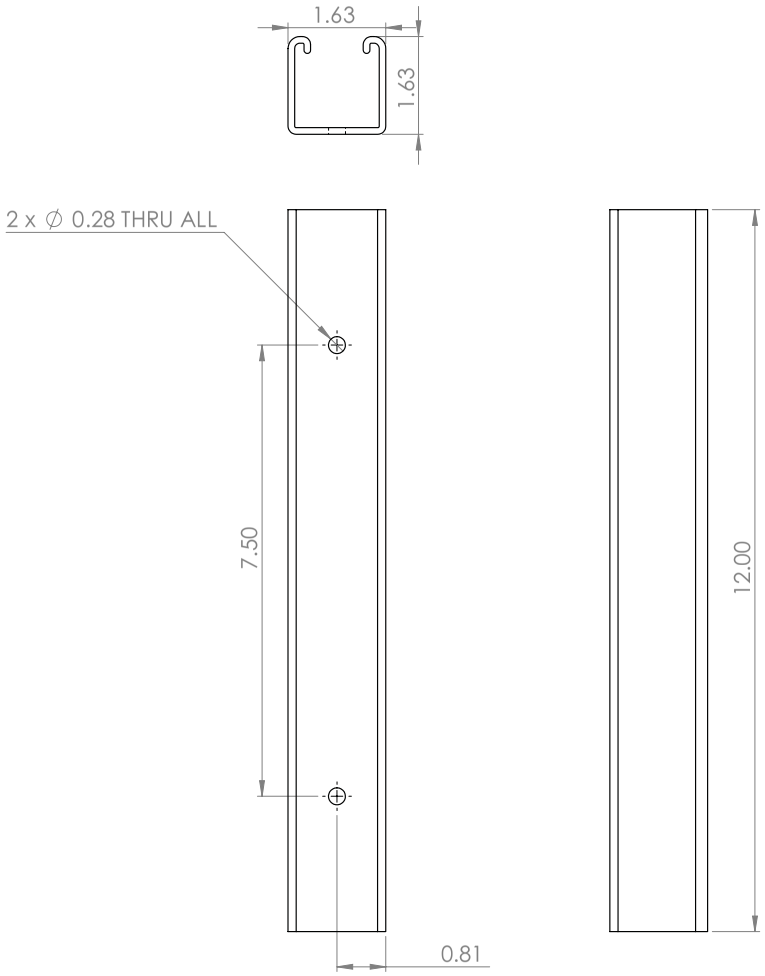

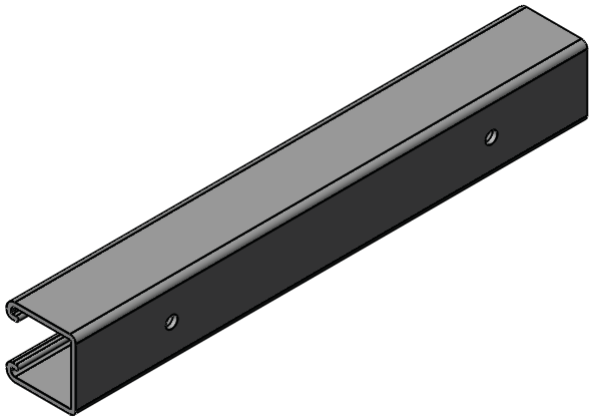

PROPRIETARY AND CONFIDENTIAL

THE INFORMATION CONTAINED IN THIS DRAWING IS THE SOLE PROPERTY OF the **Geological Survey of Canada (G.S.C)** ANY REPRODUCTION IN PART OR AS A WHOLE WITHOUT THE WRITTEN PERMISSION OF **G.S.C.** IS PROHIBITED.

GSC PACIFIC

Natural Resources Canada / Ressources naturelles Canada

UNLESS OTHERWISE SPECIFIED:

DIMENSIONS ARE IN **INCHES**
TOLERANCES:
FRACTIONAL: 1/32"
ANGULAR: MACH 0.1 BEND 0.1
TWO PLACE DECIMAL 0.005
THREE PLACE DECIMAL 0.001

INTERPRET GEOMETRIC TOLERANCING PER: **ASME Y14.5-2009**

MATERIAL: Stainless Steel

FINISH

DO NOT SCALE DRAWING

	NAME	DATE
DRAWN	DJP	2016-09-15
DESIGN		2016-09-12

COMMENTS:

PROJECT (GROUP): (CHIS) Mountain Top Kiosk

TITLE: 1-5/8" x 1-5/8" x 12" STRUT CHANNEL

SIZE: B | DWG. NO.: 3310T194 | REV: A-1.0

SCALE: 1:2 | SHEET 1 OF 1

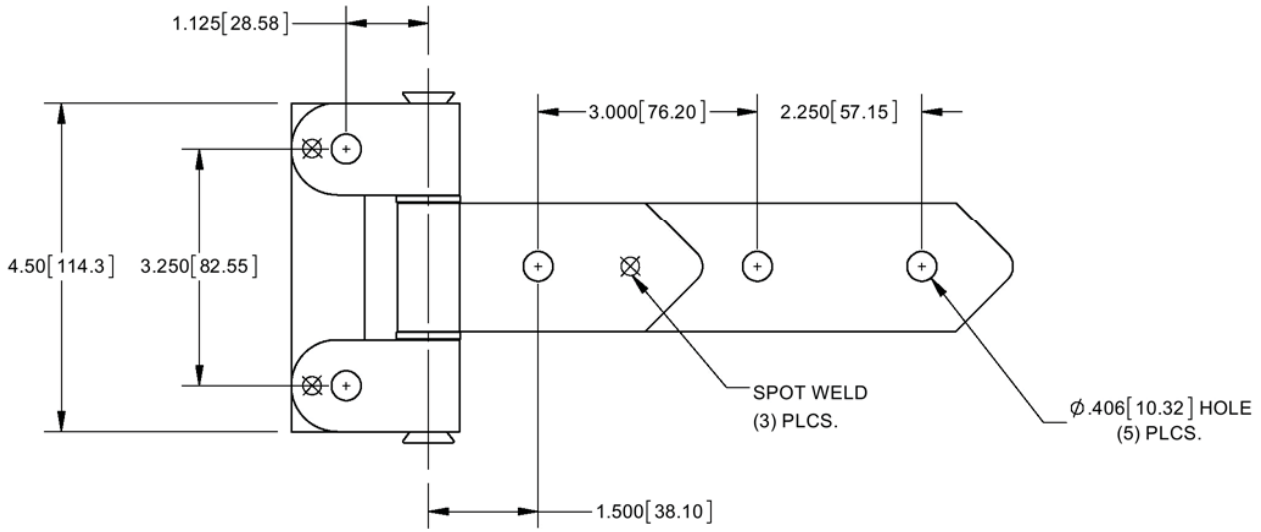

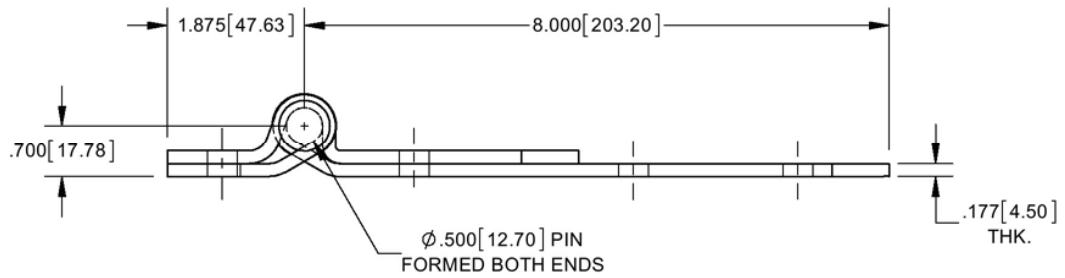

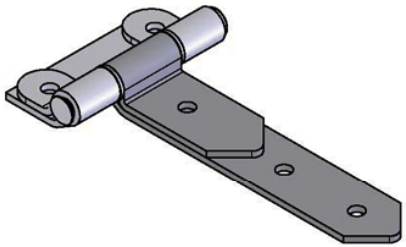

PART NO.	MATERIAL	FINISH	PIN
H1090A	ALUMINUM	MILL	NON-REMOVABLE, 304SS
H1090ZN	STEEL	ZINC PLATED	NON-REMOVABLE, STEEL

NOTE:
DIMENSIONS IN BRACKETS ARE IN METRIC.

SIERRA PACIFIC
ENGINEERING AND PRODUCTS ©
SPEP.COM

CONFIDENTIAL PROPRIETARY INFORMATION | PLOT DATE: 10/20/2014

This document contains information that is the confidential and proprietary property of SPEP and may not be copied, published, or disclosed to others, or used for any purpose other than review, without the express written authorization of an authorized officer of SPEP. This document must be kept only in SPEP's confidential files when not in use.

UNSPECIFIED TOLERANCES
ANGLES: ±3°

INCHES		MM	
.XX	±.030	.X	±.76
.XXX	±.015	.XX	±38
.XXXX	±.005	.XXX	±.13

MATERIAL: SEE TABLE
FINISH: SEE TABLE
UNITS: INCHES
SCALE: 1:2.5
THIRD ANGLE PROJECTION
WEIGHT: 2.132 | SIZE: A | SHEET 1 OF 1
DWG. NO. 16331-H1090A

PART NUMBER: **SEE TABLE**
DESCRIPTION: STRAP HINGE

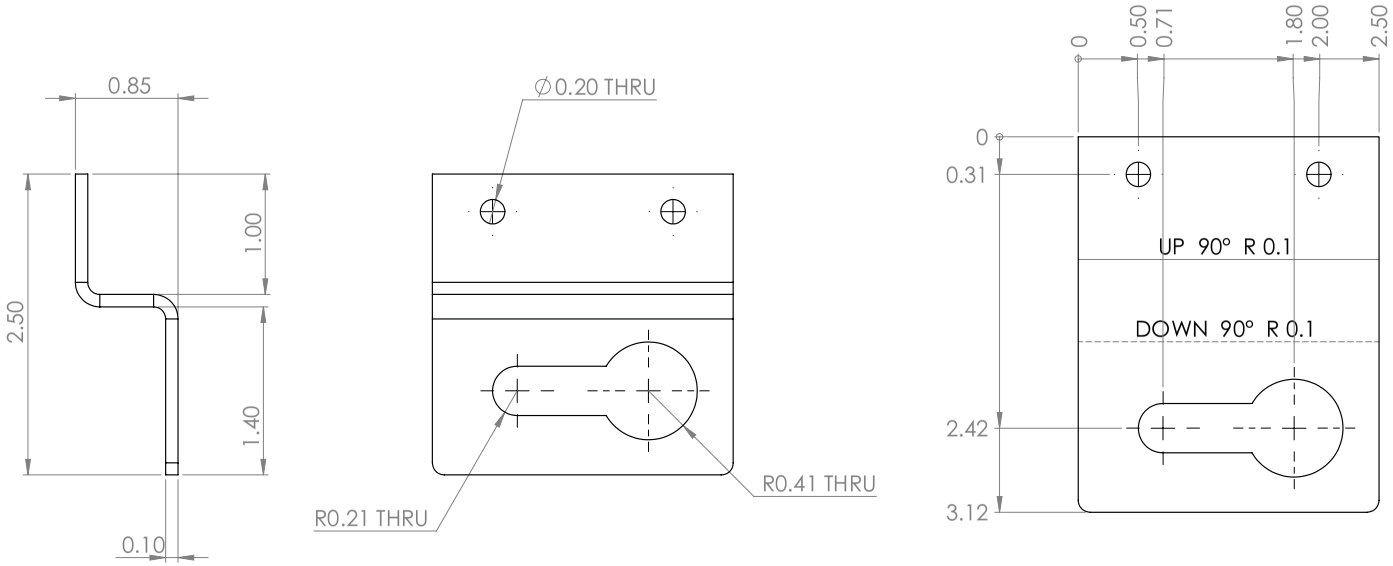

PROPRIETARY AND CONFIDENTIAL

THE INFORMATION CONTAINED IN THIS DRAWING IS THE SOLE PROPERTY OF the **Geological Survey of Canada (G.S.C)** ANY REPRODUCTION IN PART OR AS A WHOLE WITHOUT THE WRITTEN PERMISSION OF **G.S.C.** IS PROHIBITED.

GSC PACIFIC

Natural Resources Canada / Ressources naturelles Canada

UNLESS OTHERWISE SPECIFIED:

DIMENSIONS ARE IN **INCHES**
TOLERANCES:
FRACTIONAL: 1/32"
ANGULAR: MACH 0.1 BEND 0.1
TWO PLACE DECIMAL 0.005
THREE PLACE DECIMAL 0.001

INTERPRET GEOMETRIC TOLERANCING PER: **ASME Y14.5-2009**

MATERIAL: Stainless Steel

FINISH: As Formed

DO NOT SCALE DRAWING

	NAME	DATE
DRAWN	DJP	2016-09-15
DESIGN	DJP	2016-09-12

COMMENTS:

PROJECT (GROUP): WOSS KIOSK (GSC Pacific)

TITLE: Prop rod tab LH

SIZE: B | DWG. NO.: MTK 103L | REV: A-1.0

SCALE: 1:1 | SHEET 1 OF 1

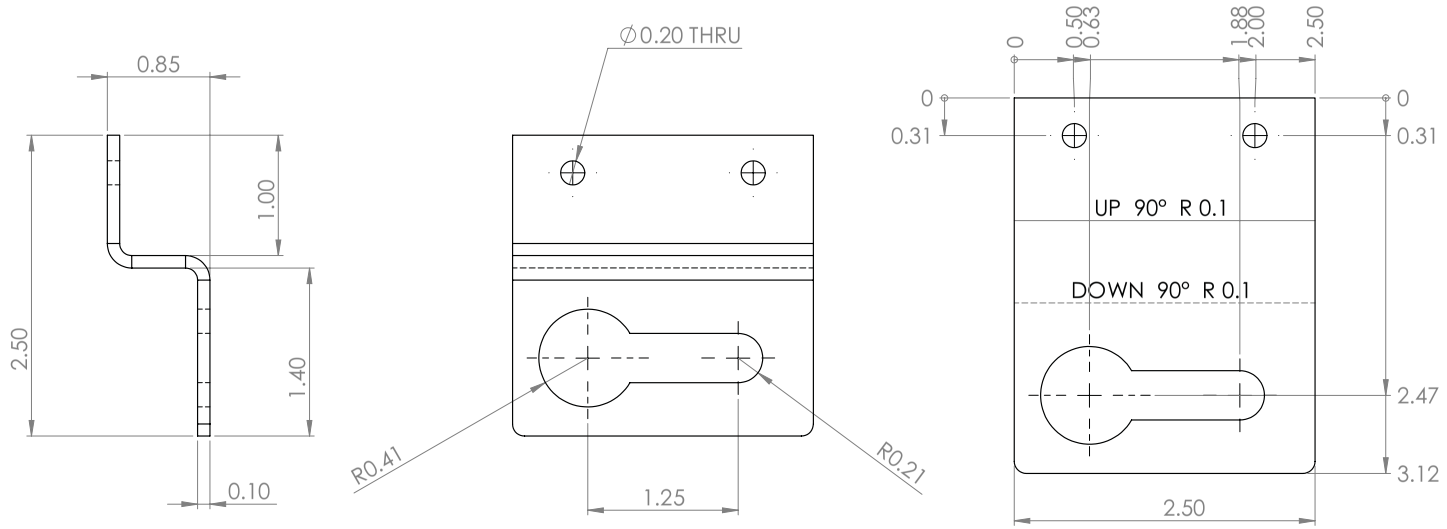

PROPRIETARY AND CONFIDENTIAL

THE INFORMATION CONTAINED IN THIS DRAWING IS THE SOLE PROPERTY OF the **Geological Survey of Canada (G.S.C)** ANY REPRODUCTION IN PART OR AS A WHOLE WITHOUT THE WRITTEN PERMISSION OF **G.S.C.** IS PROHIBITED.

GSC PACIFIC

Canada

UNLESS OTHERWISE SPECIFIED:

DIMENSIONS ARE IN **INCHES**
TOLERANCES:
FRACTIONAL: 1/32"
ANGULAR: MACH 0.1 BEND 0.1
TWO PLACE DECIMAL 0.005
THREE PLACE DECIMAL 0.001

INTERPRET GEOMETRIC TOLERANCING PER: **ASME Y14.5-2009**

MATERIAL
Stainless Steel

FINISH
As Formed

DO NOT SCALE DRAWING

	NAME	DATE
DRAWN	DJP	2016-03-13
DESIGN	DJP	

COMMENTS:

PROJECT (GROUP)
(CHIS) Mountain Top Kiosk

TITLE:
Prop rod tab RH

SIZE	DWG. NO.	REV
B	MTK103R	A-2.0

SCALE: 1:1 | SHEET 1 OF 1

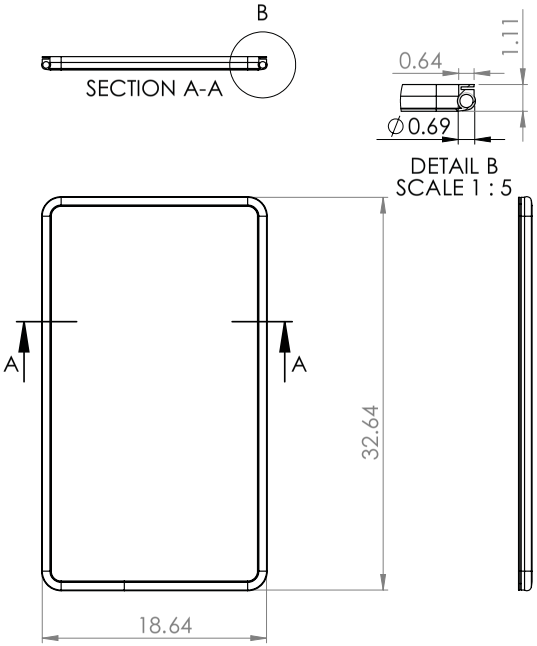

McMaster-Carr 12335A73

PROPRIETARY AND CONFIDENTIAL

THE INFORMATION CONTAINED IN THIS DRAWING IS THE SOLE PROPERTY OF the **Geological Survey of Canada (G.S.C)** ANY REPRODUCTION IN PART OR AS A WHOLE WITHOUT THE WRITTEN PERMISSION OF **G.S.C.** IS PROHIBITED.

GSC PACIFIC

Natural Resources Canada / Ressources naturelles Canada

UNLESS OTHERWISE SPECIFIED:

DIMENSIONS ARE IN **INCHES**
TOLERANCES:
FRACTIONAL: 1/32"
ANGULAR: MACH 0.1 BEND 0.1
TWO PLACE DECIMAL 0.005
THREE PLACE DECIMAL 0.001

INTERPRET GEOMETRIC TOLERANCING PER: **ASME Y14.5-2009**

MATERIAL
EPDM 60 Durometer

FINISH

DO NOT SCALE DRAWING

	NAME	DATE
DRAWN	DJP	2016-09-15
DESIGN	DJP	2016-09-12

COMMENTS:

PROJECT (GROUP)
(CHIS) Mountain Top Kiosk

TITLE:
Door Bulb Seal

SIZE **B** | DWG. NO. MTK 179 | REV A-1.0

SCALE: 1:10 | SHEET 1 OF 1

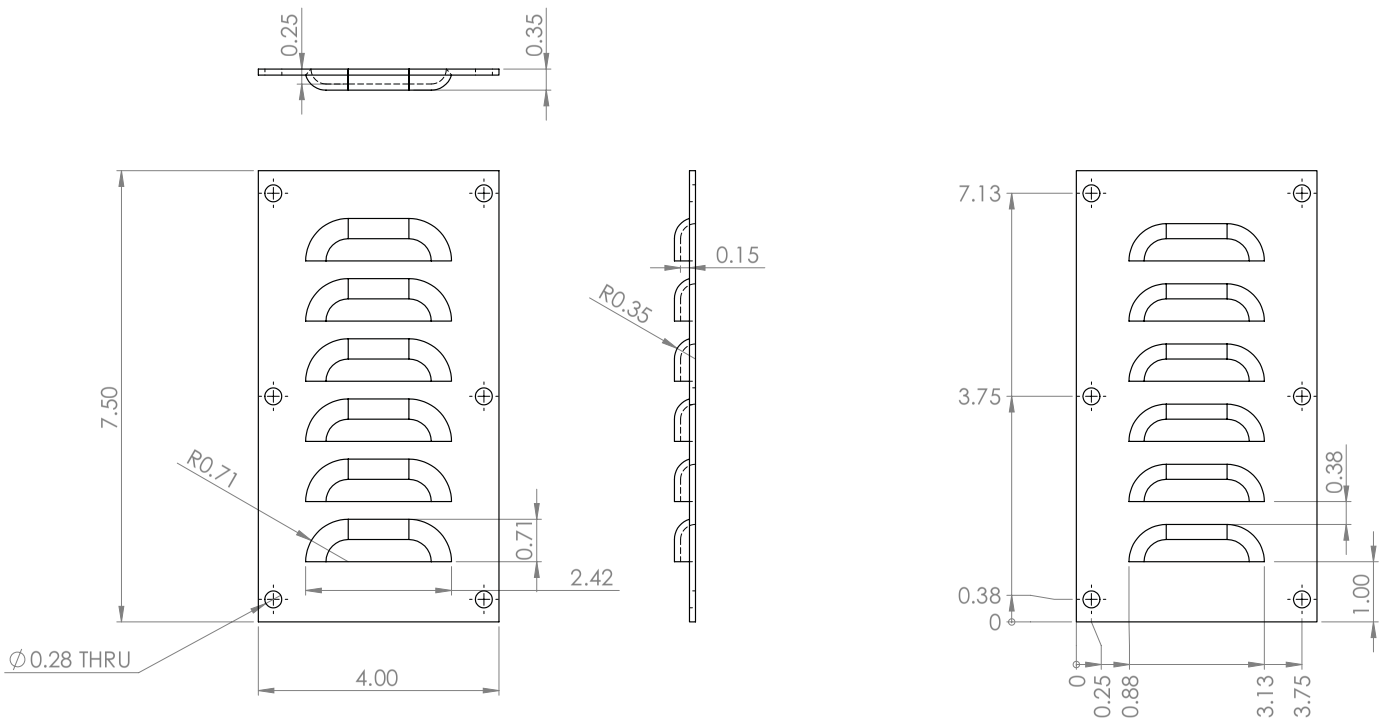

PROPRIETARY AND CONFIDENTIAL

THE INFORMATION CONTAINED IN THIS DRAWING IS THE SOLE PROPERTY OF the **Geological Survey of Canada** (**G.S.C**) ANY REPRODUCTION IN PART OR AS A WHOLE WITHOUT THE WRITTEN PERMISSION OF **G.S.C.** IS PROHIBITED.

GSC PACIFIC

Canada

UNLESS OTHERWISE SPECIFIED:

DIMENSIONS ARE IN **INCHES**
TOLERANCES:
FRACTIONAL: 1/32"
ANGULAR: MACH 0.1 BEND 0.1
TWO PLACE DECIMAL 0.005
THREE PLACE DECIMAL 0.001

INTERPRET GEOMETRIC TOLERANCING PER: **ASME Y14.5-2009**

MATERIAL
#10 ga 5052-H32

FINISH
As Formed

DO NOT SCALE DRAWING

	NAME	DATE
DRAWN	HOV	
DESIGN	HOV	

COMMENTS:

PROJECT (GROUP)
(CHIS) Mountaintop Kiosk

TITLE:
Louver Cover plate

SIZE	DWG. NO.	REV
B	MTK 19206	A-1.0

SCALE: 1:2 | SHEET 1 OF 1

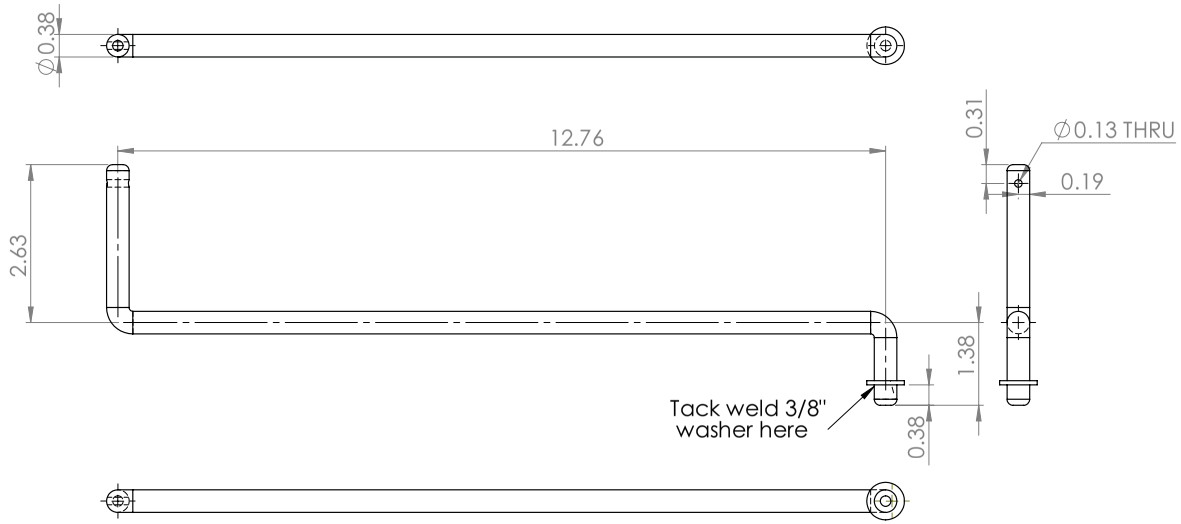

PROPRIETARY AND CONFIDENTIAL

THE INFORMATION CONTAINED IN THIS DRAWING IS THE SOLE PROPERTY OF the **Geological Survey of Canada (G.S.C)** ANY REPRODUCTION IN PART OR AS A WHOLE WITHOUT THE WRITTEN PERMISSION OF **G.S.C.** IS PROHIBITED.

GSC PACIFIC

UNLESS OTHERWISE SPECIFIED:

DIMENSIONS ARE IN **INCHES**
TOLERANCES:
FRACTIONAL: 1/32"
ANGULAR: MACH 0.1 BEND 0.1
TWO PLACE DECIMAL 0.005
THREE PLACE DECIMAL 0.001

INTERPRET GEOMETRIC TOLERANCING PER: **ASME Y14.5-2009**

MATERIAL: Stainless Steel

FINISH: Architectural 4

DO NOT SCALE DRAWING

	NAME	DATE
DRAWN	DJP	2016-03-13
DESIGN	DJP	2016-03-03

COMMENTS:

PROJECT (GROUP): (CHIS) Mountain Top Kiosk

TITLE: Prop Rod

SIZE: B

DWG. NO.: MTK 157

REV: A-1.0

SCALE: 1:2

SHEET 1 OF 1

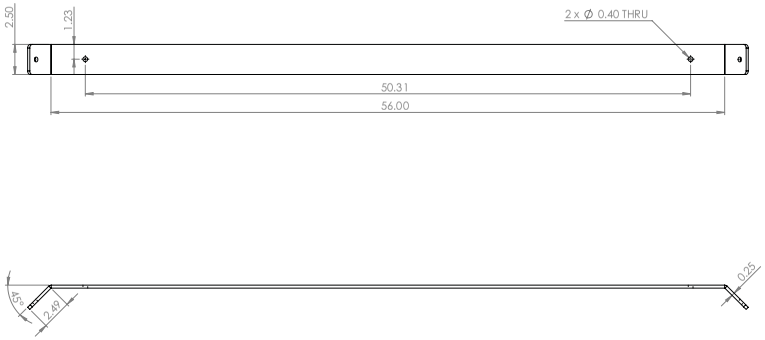

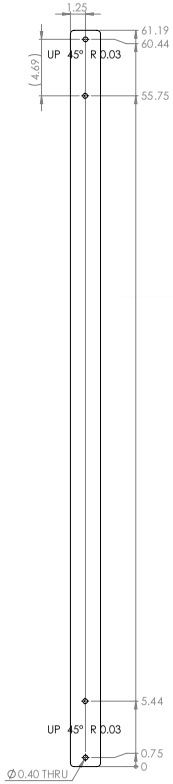

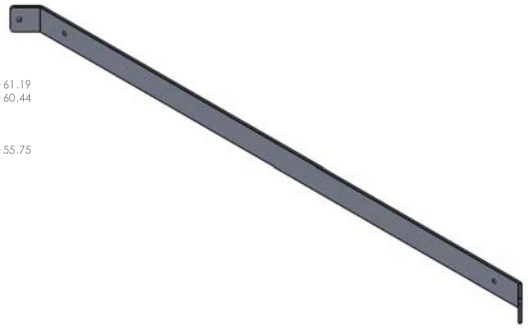

PROPRIETARY AND CONFIDENTIAL
THE INFORMATION CONTAINED IN THIS DRAWING IS THE SOLE PROPERTY OF the **Geological Survey of Canada (G.S.C)**. ANY REPRODUCTION IN PART OR AS A WHOLE WITHOUT THE WRITTEN PERMISSION OF THE **G.S.C.** IS PROHIBITED.

UNLESS OTHERWISE SPECIFIED:
DIMENSIONS ARE IN **INCHES**
TOLERANCES:
FRACTIONAL ±1/32
ANGULAR: MACH ±1 BEND ±1
TWO PLACE DECIMAL ±0.005
THREE PLACE DECIMAL ±0.001
INTERPRET GEOMETRIC TOLERANCING PER: **ASME Y14.5-2009**
MATERIAL 5052-H32
FINISH #4 Arch
DO NOT SCALE DRAWING

	NAME	DATE
DRAWN	DJP	2016-03-10
DESIGN	DJP	2016-03-03

COMMENTS

(CHIS) Mountaintop Kiosk

TITLE: Diagonal Strap Support

SIZE **D** | DWG. NO. MTK110 | REV A-1.0

SCALE: 1:5 | SHEET 1 OF 1