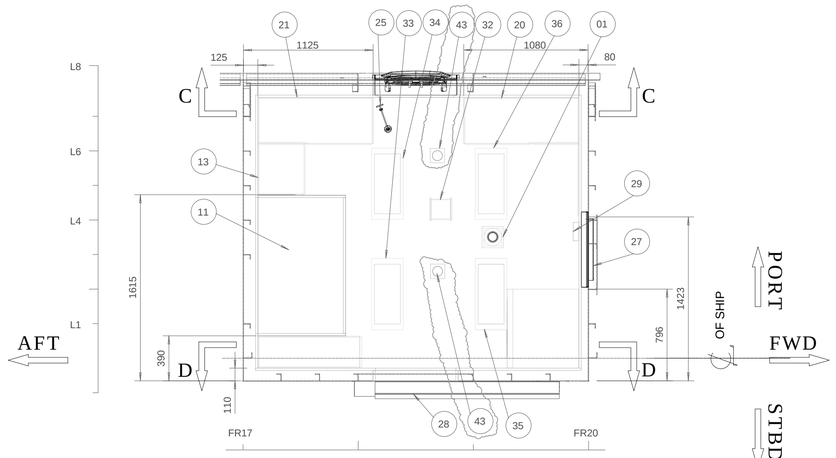

PLAN VIEW AT 5600 MM ABOVE BL

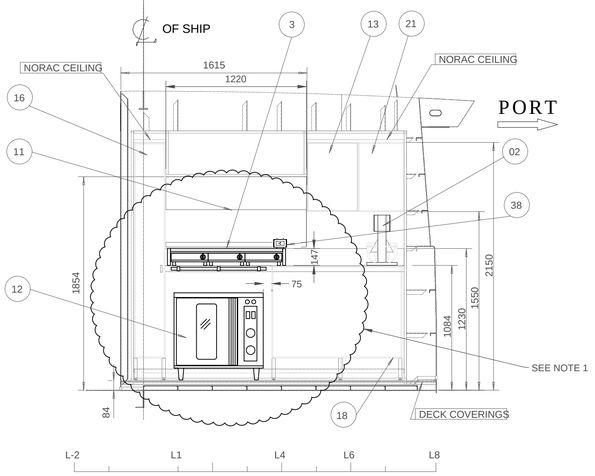

SECTION A-A

LOOKING AFT

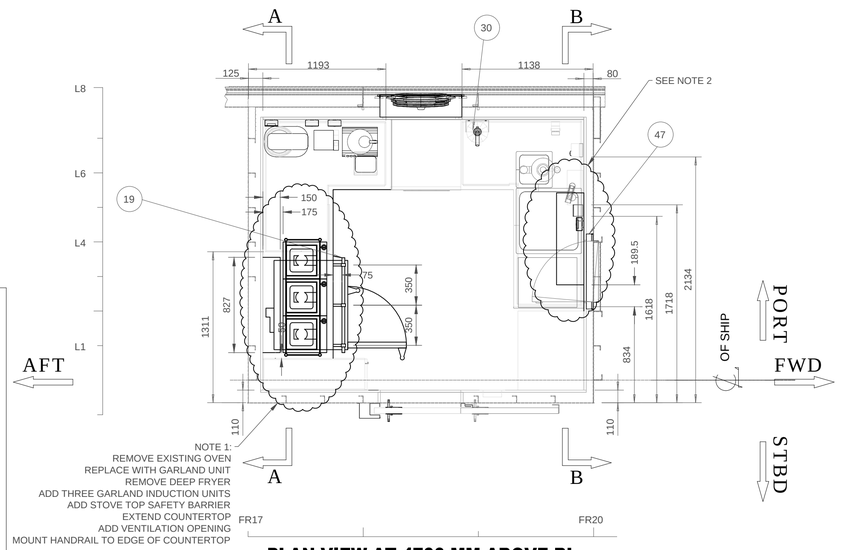

NOTE 1:
REMOVE EXISTING OVEN
REPLACE WITH GARLAND UNIT
REMOVE DEEP FRYER
ADD THREE GARLAND INDUCTION UNITS
ADD STOVE TOP SAFETY BARRIER
EXTEND COUNTERTOP
ADD VENTILATION OPENING
MOUNT HANDRAIL TO EDGE OF COUNTERTOP

PLAN VIEW AT 4700 MM ABOVE BL

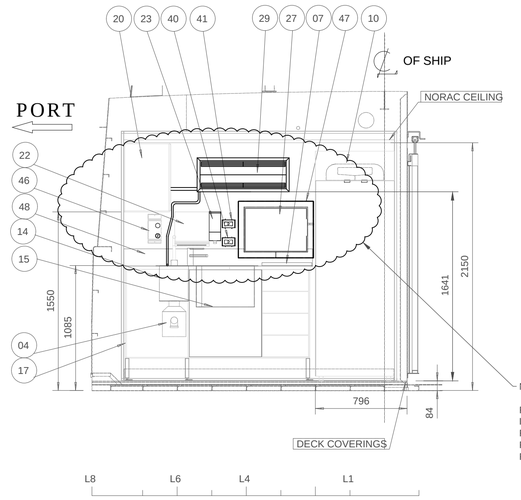

NOTE 2:
REMOVE EXISTING CABINETS ALONG FORWARD WALL
INSTALL MITSUBISHI ELECTRIC AIR CONDITIONER ON FORWARD WALL
ROUTE DRAINAGE PIPE DOWN FORWARD WALL TO SINK
ROUTE LIQUID & GAS LINES TO OUTDOOR UNIT
RELOCATE FORWARD SERVICE DOOR MAGNET TO COUNTERTOP

SECTION B-B

LOOKING FORWARD

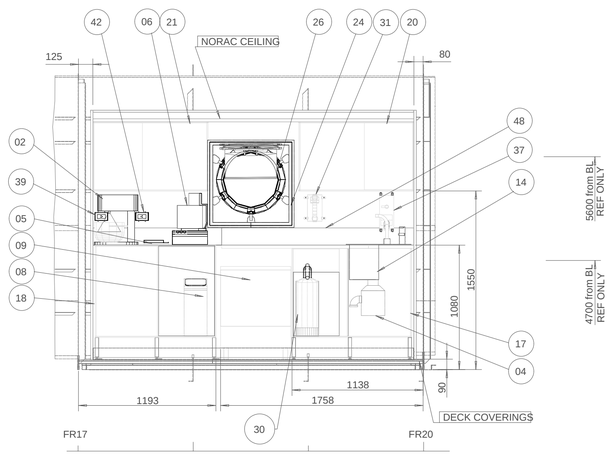

ELEVATION C-C

LOOKING TO PORT

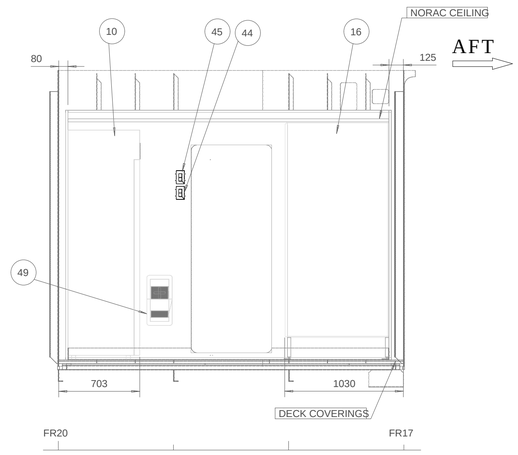

ELEVATION D-D

LOOKING TO STBD

ITEM NO	TRIBON REFERENCE	DESCRIPTION	MANUFACTURER	WEIGHT
1	8911_8_006_006	HEAT DETECTOR IP44, WITH BOX	NOTIFIER	-
2	6400_1_097_001	Kitchen Aid Mixer	KITCHEN AID	-
3	6400_1_095_001	GARLAND INDUCTION ELEMENT	GARLAND	-
4	5930_2_052_001	DISPERATOR FOOD WASTE DISPOSER	DISPERATOR	-
5	6400_1_094_001	Scale Portion (Bakers) 1-10 lb (Electronic Scale)	TAYLOR	-
6	6400_1_093_001	FOOD PROCESSOR KFPW7600B	JESOM FOOD	-
7	6400_1_089_001	Preparation table with SS base and wooden butcher block	-	-
8	6400_1_088_001	Garbage Container 20 l	-	-
9	6400_1_087_001	Industrial Dishwasher	BLAKE SLEE	-
10	6400_1_086_001	Refrigerator	TRUE FOOD SERVICE EQUIP. INC	-
11	6400_1_085_001	Exhaust Hood	SUPERIOR HOODS	-
12		GARLAND MASTER HALF-SIZE ELECTRIC CONVECTION OVEN	GARLAND	-
13	6400_1_082_001	SS Suspended Cupboard	TEAM RUSTFRITT	-
14	6400_1_081_001	SS 10"x10"x12" deep pot sink with the industrial grade garbor	-	-
15	6400_1_080_001	SS 20"x20"x14" deep pot sink	-	-
16	6400_1_079_001	High Cupboard	TEAM RUSTFRITT	-
17	6400_1_078_001	Corner Cabinet Around Sink	TEAM RUSTFRITT	-
18	6400_1_077_001	Corner Cabinet with 1 "door	TEAM RUSTFRITT	-
19		HAND RAIL	-	-
20	6400_1_075_002	SS Suspended Cupboard with sliding doors (L)	TEAM RUSTFRITT	-
21	6400_1_075_001	SS Suspended Cupboard with sliding doors (R)	TEAM RUSTFRITT	-
22	6400_1_035_008	Paper Dispenser	BOBRICK	-
23	6400_1_016_017	Soap Dispenser	BOBRICK	-
24	6350_4_011_008	Al - Window box in lining	-	-
25	6250_1_111_001	SIDE SCUTTLE DEADLIGHT RETAINER	LA AUXILIAR NAVAL	-
26	6250_1_011_001	SIDE SCUTTLE WITH OPENING D=450MM CO, BOLT ON FRAME, ALUMINIUM ALLOY	LA AUXILIAR NAVAL	-
27	6240_1_050_001	NWT DOOR (RH) 320x480 C.O. (PASS THROUGH)	ALVEDOOR	-
28	6240_1_022_001	G/T SLIDING DOOR 1800x700 (RH), TYPE A60 SINGLE EC, BOLTED, STEEL, SILL TYPE A3	ALVEDOOR	-
29		MITSUBISHI ELECTRIC MSY-GE18NA AIR CONDITIONER	MITSUBISHI	-
30	5550_2_111_001	PORTABLE FOAM FIRE EXTINGUISHER 9L	AMEREX	-
31	4320_2_003_001	AUTOMATIC TELEPHONE FOR AND GALLEY	HOSE McCANN	-
32	4300_3_005_001	LOUDSPEAKER FLUSHMOUNT; IP44	HOSE McCANN	-
33	3300_1_060_001	LIGHTING ARMATURE; 2x17W;RECESSED;IP44	MARITIME LIGHTING INC	-
34	3300_1_059_006	LIGHTING ARMATURE; 2x17W;RECESSED;IP44	MARITIME LIGHTING INC	-
35	3300_1_059_005	LIGHTING ARMATURE; 2x17W;RECESSED;IP44	MARITIME LIGHTING INC	-
36	3300_1_059_004	LIGHTING ARMATURE; 2x17W;RECESSED;IP44	MARITIME LIGHTING INC	-
37	3300_1_041_002	2P+E SOCKET W/ SWITCH; IP66;20A;230V	LEVITON CANADA	-
38	3300_1_037_016	SINGLE SOCKET; IP44; SURFACE	LEVITON CANADA	-
39	3300_1_037_015	SINGLE SOCKET; IP44; SURFACE	LEVITON CANADA	-
40	3300_1_037_010	SINGLE SOCKET; IP44; SURFACE	LEVITON CANADA	-
41	3300_1_037_005	SINGLE SOCKET; IP44; SURFACE	LEVITON CANADA	-
42	3300_1_037_003	SINGLE SOCKET; IP44; SURFACE	LEVITON CANADA	-
43	N/A	AUDIO SPEAKERS (2pcs)	-	-
44	3300_1_032_001	SWITCH; SURFACE; IP 44;EMERGENCY	LEVITON CANADA	-
45	3300_1_031_007	SWITCH; SURFACE;IP44	LEVITON CANADA	-
46	3000_1_300_CMP	START & STOP CONTROLLER	DISPERATOR	-
47	6350_4_001_001	BOX IN LINING FOR PASS-THROUGH	-	-
48	1201_6400_01	BACKSPLASH	TEAM RUSTFRITT	-
49	5400_1_040_101	WALL FAN HEATER RWF	BRONSWERK	-

TOTAL WEIGHT: TBD

RESERVATION 1

RESERVATION:

1. THE WEIGHT IS NOT AVAILABLE AT THE MOMENT.

NOTES:

1. TYPICAL SHIPS DATA: - FRAME SPACING 1000mm,
   - LONGITUDINAL SPACING : L0 TO L7 :300mm
   L7 TO L8 :440mm

REFERENCE DRAWINGS:

1. BD 6094-89940-01 GENERAL ARRANGEMENT PLAN
2. BD 6094-64000-02 Furniture schedule
3. BD 6094-64000 Accommodation Plan on Decks

Rev.	Date	Description	Perform	Check	Appr.
3	29/08/2013	Replaced stove and added hand rail	B. Powell		
2	05/07/2012	Updated acc. to TIR# 94-803	V.Ghimici	G.Nastase	M.Mocanu
1	02/02/2011	Updated due to new VFI from TEAM RUSTFRITT	M.Toader	A.Orasanu	M.Mocanu
0	16/11/2010	Issue for construction	M.Toader	G.Nastase	M.Mocanu
A	26/10/2010	Issue for Comments	M.Toader	G.Nastase	M.Mocanu

Client: CANADIAN COAST GUARD

ICE international contract engineering

IRVING SHIPBUILDING INC.

P.O. Box 9110, 3099 Barrington Street, Halifax NS, Canada B3K 5M7,
Tel: 902.423.9271, Fax: 902.429.4510

Title: GALLEY ARRANGEMENT UNIT 120-1

MID-SHORE PATROL VESSEL

Scale: 1:25	Size: A1	Project No. 6094
Drawn by: M.Toader	Checked by: G.Nastase	Dwg. date: 26/10/2010
Draw.no: 6094-O1201-6400-003		Rev. 3
Contract No. F7045-06001/002/NQ	Proj	Sheet: 1/1

Drawing number-sheet no./rev. 6094-O1201-6400-003_001_2

© IRVING SHIPBUILDING INC.

The information and data contained herein are proprietary to Irving Shipbuilding Inc. and are not to be copied, reproduced, duplicated or disclosed to others, in whole or in part, without prior written consent of Irving Shipbuilding Inc.