User Instructions for WRC1021D

Doc. 0001-5989

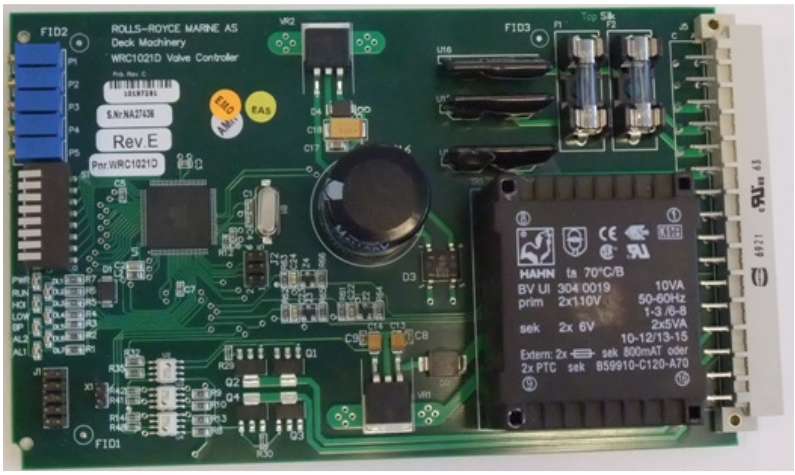

CONTENTS

1.0 INTRODUCTION TO THE WRC1021D

The WRC1021D remote controller is a replacement for the older type WRC1021 boards. It is 100% mechanical and functional compatible with the older WRC1021. WRC1024D are designed with modern SMD technology to extend the life time.

TECHNICAL SPECIFICATIONS

Power Supply	230V	AC/50 – 60 Hz
	24V	DC
Power Consumption	220V	0.04A (no servo valves connected)
	24V	4.0A Max (depending on Output Limit alarms)
Max Output Servo Drivers	1.5A	220VAC
Max Output Limit alarms	2.0A	24VDC (Absolute max. rating).
Board Dimensions	100 x 160 mm Euro Card	
Board Weight	385 grams	
Item id	000070089	

WRC1021D is produced with serial nr. and product revision number. Refer to these numbers when you request for service.

Ser. No. yynnnn
PRnn

2.0 FUNCTIONAL DESCRIPTION

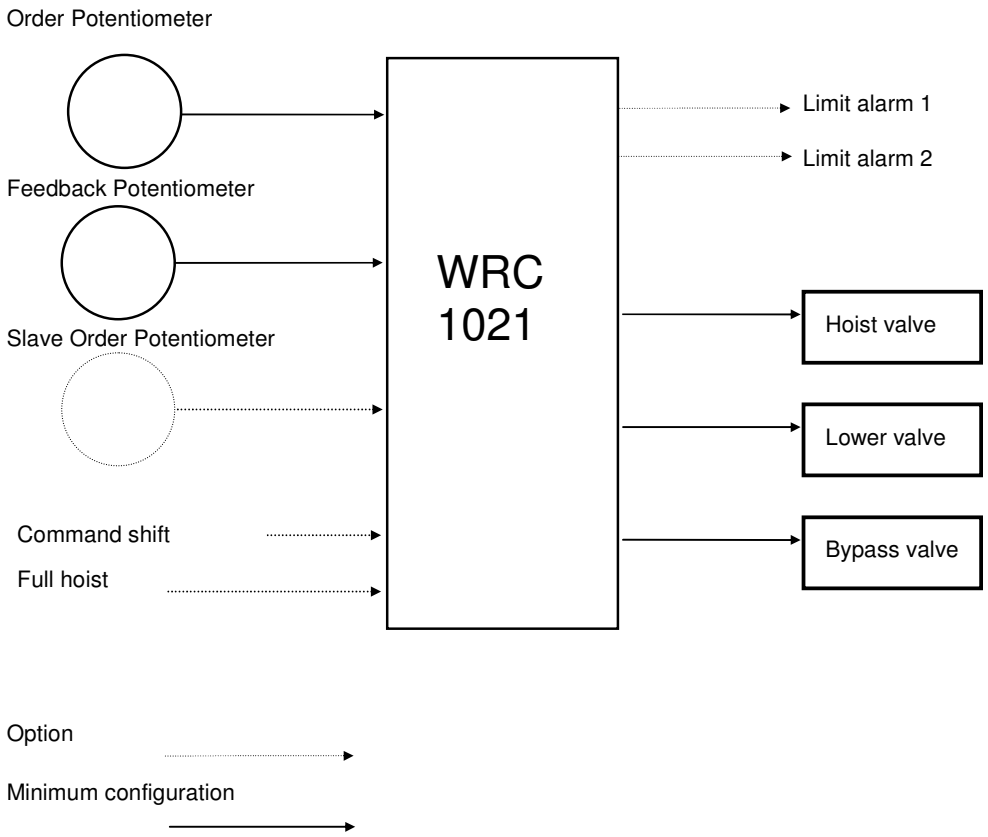

Fig.1 Block Diagram

The WRC1021D remote controller compares current order signal with the feedback signal. The system may have two orders one main order and one slave order, which is selected via the Slave order signal. If order and feedback are out of balance the WRC1021D board will set the servo valve outputs according to the signal difference. When balance is achieved the valves will go inactive and hold this position until the order takes a new position. The bypass will open if the order has been left in neutral position for 7 seconds (if this option is not disabled), or an error is detected, such as signals out of range.

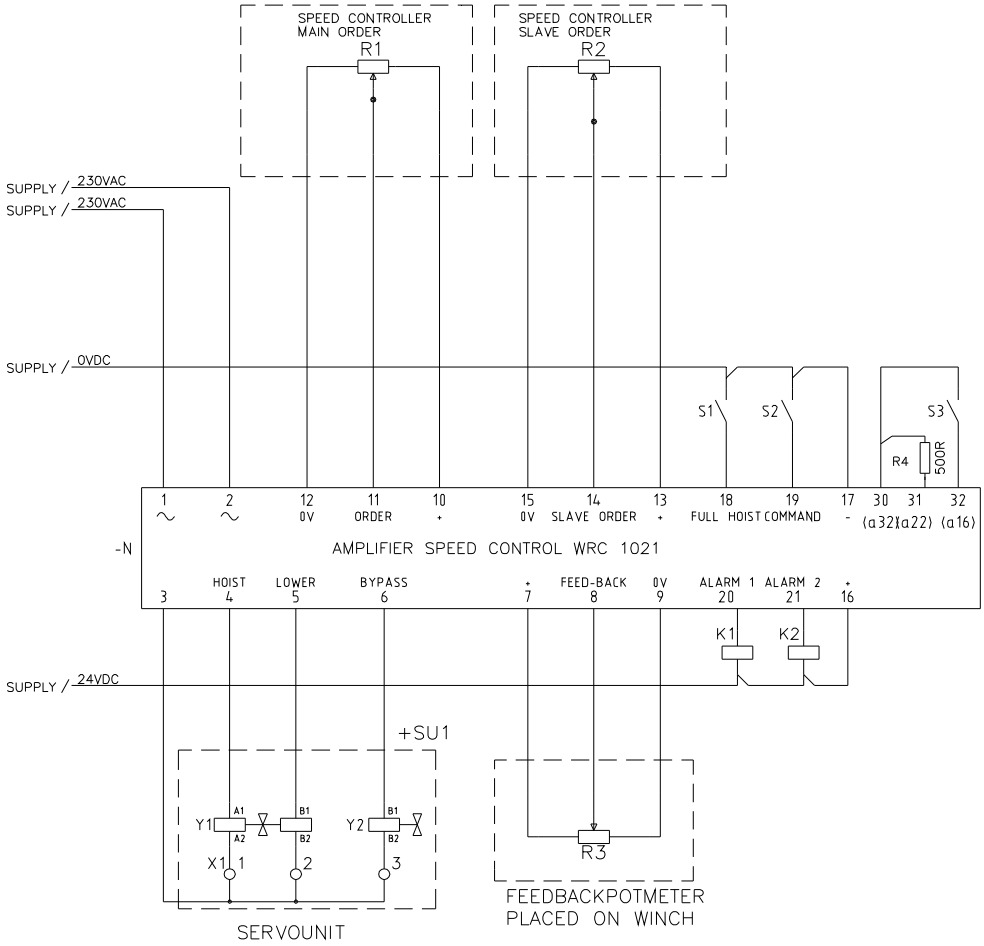

Fig. 2 Electrical connections.

Options
- R2 Slave potentiometer
- S1 Disconnects order pot.meter and sets the manoeuvring handle in “full hoist” pos.
- S2 Disconnects main order and connects slave order input.
- S3 Reduces the speed of the manoeuvring handle.
- K1 0VDC output when the manoeuvre handle is in “alarm area 1”
- K2 0VDC output when the manoeuvre handle is in “alarm area 2”

24VDC Supply is not necessary if none of the options are connected.

3.0 POTENTIOMETERS, SWITCHES AND INDICATORS

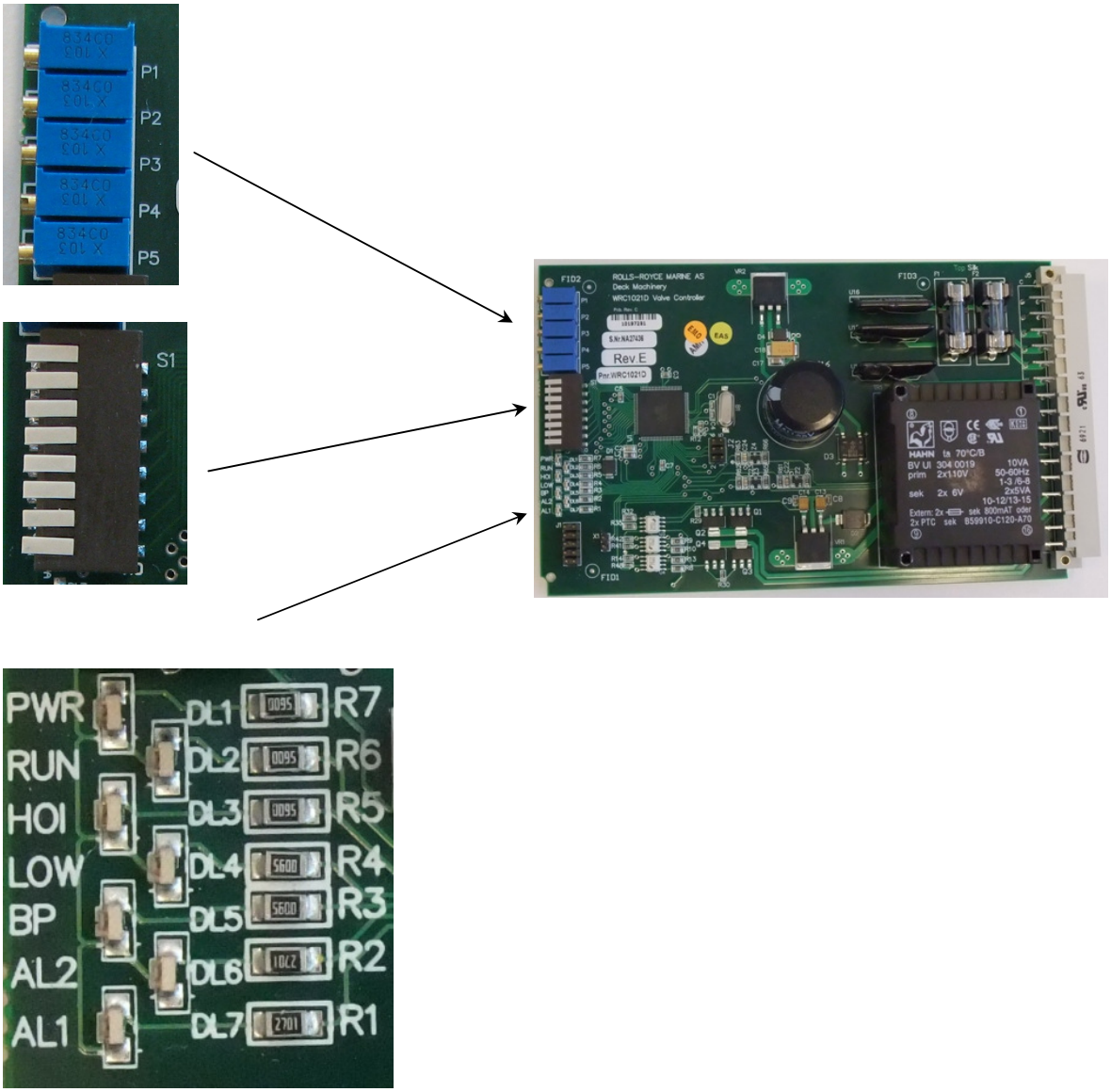

Fig. 3 Board Layout

Trim. Potentiometers		Dip Switches		Led Indicators	
P1	Full hoist Position	S1.1	Alarm2 Invert	DL1	5V Indicator
P2	Full hoist Speed	S1.2	Alarm1 Invert	DL2	Running
P3	Alarm2 Limit	S1.3	Flushing	DL3	Hoist Open
P4	Alarm1 Limit	S1.4	Not in use	DL4	Lower Open
P5	Deadband	S1.5	Creep Drive	DL5	Bypass Closed
		S1.6	Disable Auto Bypass	DL6	Alarm2
		S1.7	Set Full hoist	DL7	Alarm1
		S1.8	Calibration		

P1 Adjusts the winch manoeuvre arms position when a “full hoist” signal is applied. Turning the pot meter counter clockwise will move the arm against hoist. Shall stop 3-5 mm from end-stopper on valve unit.

P2 Adjusts the winch manoeuvre arms speed, when moving to full hoist position when a “full hoist” signal is applied. The speed increases when pot meter is turned counter clockwise.

P3 Adjusts the position at which the Alarm2 will be activated. Since it is activated via the feedback signal it will be fully functional even when the winch is manually operated. The Alarm2 limit moves towards lower when pot meter is turned clockwise. (Factory setting: approx 10% lower, terminal no. 21).

P4 Adjusts the position at which the Alarm1 will be activated. Since it is activated via the feedback signal it will be fully functional even when the winch is manually operated. The Alarm1 limit moves towards lower when pot meter is turned clockwise. (Factory setting: approx 50% lower, terminal no. 20).

P5 Adjusts the systems Dead band. The Dead band increases when pot meter is turned clockwise.

S1.1 If this switch is set Alarm2 function will be inverted. Where it was active it will now be passive and vice versa.

S1.2 If this switch is set Alarm1 function will be inverted. Where it was active it will now be passive and vice versa.

S1.3 Sets the valves in flushing position, to simplify the flushing operation. Signal for full hoist and close bypass will be set, regardless of the order and feedback pot meter are connected or not.

S1.4 Not in use.

S1.5 This switch will enable the possibility to creep drive for special modes.

S1.6 This switch will disable the automatic bypassing function (7 sec. Auto bypass).

S1.7 Forces the winch to “full hoist” position set by P1. (Used during adjustments.)

S1.8 This switch set the card in modus for calibration. Earlier memory will be deleted when you operate this switch. Operate the remote controls and the manoeuvre handle to maximum range. Set the switch in off position. Calibrated values are now saved.

L1 When lit, indicates that the circuit board power supply is delivering 5V.

L2 When blinking steadily, it indicates that the program is executing normally. When blinking rapidly, it indicates error in order or feedback potentiometer circuit.

L3 When lit, the Hoist output is energizing the Hoist valve and opens it.

L4 When lit, the Lower output is energizing the Lower valve and opens it.

L5 When lit, the Bypass output is energizing the Bypass valve and closes it.

L6 When lit, the Alarm2 output in active.

L7 When lit, the Alarm1 output in active.

4.0 CALIBRATION AND START-UP OF WRC1021D CIRCUIT BOARD

How to calibrate / adjust circuit board WRC1021D after replacing circuit board and/or change of feedback potentiometer on winch.

NOTE:
Make sure that all main pumps are OFF and servo-pump is ON during calibration/adjustment of WRC card.

See fig.3 for circuit board layout.

1. **Calibration of control lever on winch.**
Make sure that all control levers are standing in correct stop position. Activate dipswitch number 8 on WRC card. Operate the control lever on winch to full hoist and then to full lower. Operate joysticks on bridge panel to full hoist and then to full lower. Operate joysticks on deck panel, if present, to full hoist and then to full lower. Deactivate dipswitch number 8 on the WRC card to store the calibration values into the card.

2. **Calibration of dead band.**
The dead band value is adjusted using pot meter number 5 on the WRC card. Clock-wise adjustment
will result to a bigger dead band. Counter clock-wise adjustment will result to a smaller dead band. If the control lever on the winch won't settle in stop position, adjust the dead band clock-wise.

3. **Adjustment of full hoist position in "auto" mode.**
Use dipswitch number 7 to activate the "full hoist" mode on the WRC card (dipswitch number 7 activates the WRC card in the same way that a full hoist signal from the control system). Adjust full hoist on the winch control lever by using pot meter P1 on the WRC card. Turn dipswitch number 7 "off" when the "full hoist" position is properly adjusted. Use pot meter P2 to adjust the control lever movement time from "stop" to "full hoist" position when "full hoist" command is activated. Adjust the control lever movement time to approx 10 seconds.

4. **Activating "Creep drive" function.**
On anchor handling and towing winches the last few years, the function "creep drive" is implemented to avoid damage on gear during coupling in. Activate dipswitch number 5, and make sure that P2 is adjusted as described in above chapter. Adjust movement time to approx 10 seconds.

5. **Digital output channels on WRC card.**
On winch deliveries during the few last years, there are mounted valves that lead some of the oil around the winch manoeuvre valve and directly into the motor. These valves, together with other valves on pipe- and pump-arrangement, are partly controlled from the WRC 1021 circuit board.

The WRC card uses two digital output channels called ”Alarm 1” and ”Alarm 2” to control this function. The use of “Alarm 1” and “Alarm 2“ changes from installation to installation. Use the circuit diagrams for each installation to determine how the WRC card output channels are used.

The relays set point is adjusted with pot meter 4 for ”Alarm 1” and pot meter 3 for ”Alarm 2”. The relay function can be inverted using dipswitch number 2 for “Alarm 1” and dipswitch number 1 for “Alarm 2”. Diode L7 is lit when ”Alarm 1” is active and diode L6 is lit when ”Alarm 2” is active.

Potentiometers number 3 and 4 on the WRC card (”Alarm 1” and ”Alarm 2” set point) is normally adjusted such that the digital output channels are activated when manoeuvre valve on winch reaches 80-90% of full hoist signal.

5.0 THE FEEDBACK POTENTIOMETER.

The feedback potentiometer, usually are of 2 k ohm type. To achieve optimum performance an original potentiometer should be used. Part no. 818-640-00, or spare part kit including seals, part no. 000001943.

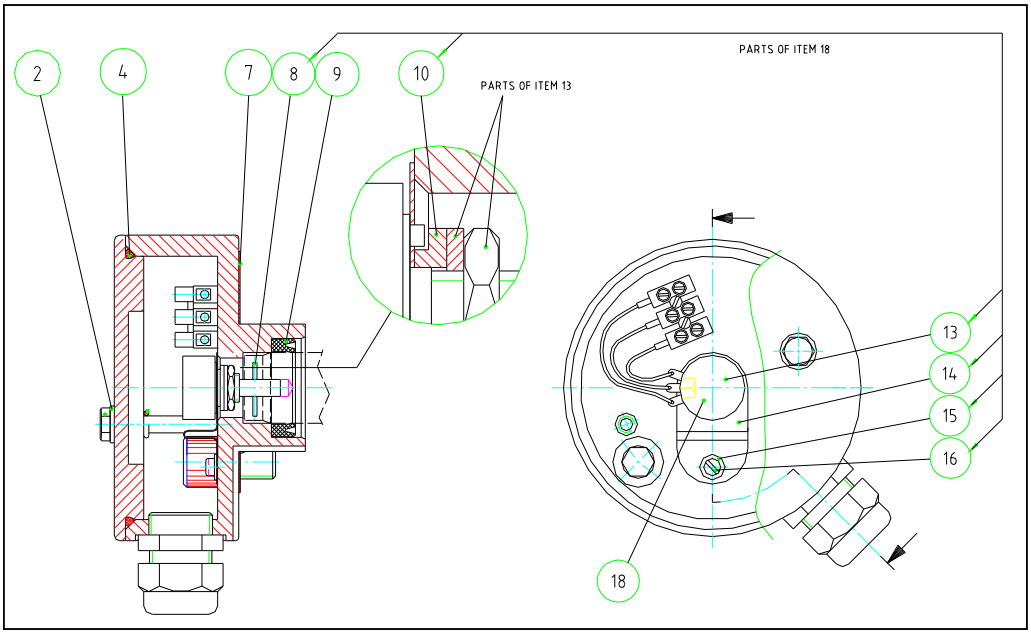

Notes:

1. If oil leakage, pos. no. 7. and 9. to be changed.
NB! Remember to remove expansion pressure in the hydraulic system before dismantling!

2. If only potentiometer pos. no. 18 to be changed, removal of expansion pressure is not necessary, as long as Device housing is not dismantled.

3. When finished replacing the potentiometer, the lever is to be moved in fully hoist/lower position. This is to ensure proper mechanical function of the feedback potentiometer.

Pos no.	Qty.	Description
2	2	Seal Washer
4	1	O-ring
7	1	Gasket
9	1	U-ring
18	1	Potentiometer

Earlier feedback potentiometer has a different mechanical solution, see Fig. 4.
100 ohm feedback potentiometer has item no. 240-682. 1 Kohm has item no. 151-604-04. To upgrade the complete housing to the new version, use item 403-732-00.

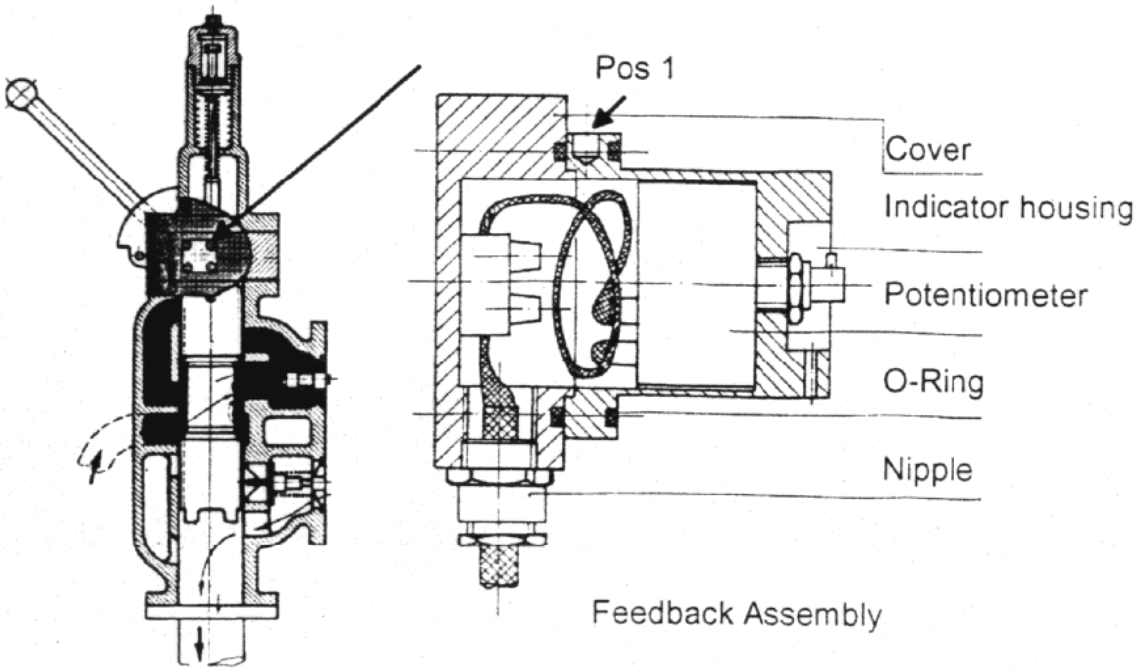

Fig. 4 Feedback potentiometer adjustments

If a potentiometer on the control lever must be replaced, following procedure shall be used.

1- Stop the pumps.

2- Let out the expansion pressure to prevent an oil leakage through the o-ring in figure no.4

3- Remove the cover and indicator housing fastened by the four bolts.

4- Make sure that the wires are marked before disconnecting them.

5- Carefully pull out the indicator housing.

6- Replace the potentiometer, to avoid damage of potentiometer and oil spill, make sure the potentiometer pin and O-ring are correctly fitted before the bolts are tightened.

7- Potentiometer to be adjusted in centre when lever is in stop position.

8- Readjust the feedback as described in chapter 4.

If the system for some reason is not letting itself be calibrated check the following points.

1- Feedback potentiometer is incorrectly connected, the two endpoint connections has been switched. This is easily checked with a voltmeter at the rear of the WRC1021 rack system, see fig. 2 (electrical connections).
Place the black (0V) measuring pin at '9' and the red (+) at '8', now get someone to move the manouver arm against hoist, the voltage should now be decreasing. If not the endpoints must be switched. And while you are at it check the Order and Slave order signals if any. You can keep the black measuring pin at '9' and the red at '11' for Order and '14' for Slave order. The result should be the same, decreasing voltage in hoist, if not take corrective measures accordingly.

2- The servo oil lines are crossed. This must be checked by actuating the valves by means of a screwdriver at the end of solenoid see Fig.5 and visually check that the manouver arm moved correctly.

   PS. You have to activate the Bypass valve as well, keeping it from bypassing. Make sure the manoeuvre arm is moving against hoist when the A solenoid is manually activated and Lower when B is activated.

3- The servo valves electrical connections have been switched. Try switching the solenoid connectors.

When the arm is moving correctly, turn the indicator housing until the manoeuvre arm is exactly in STOP position, then tighten the 4 cover bolts carefully.

6.0 SERVO SYSTEM

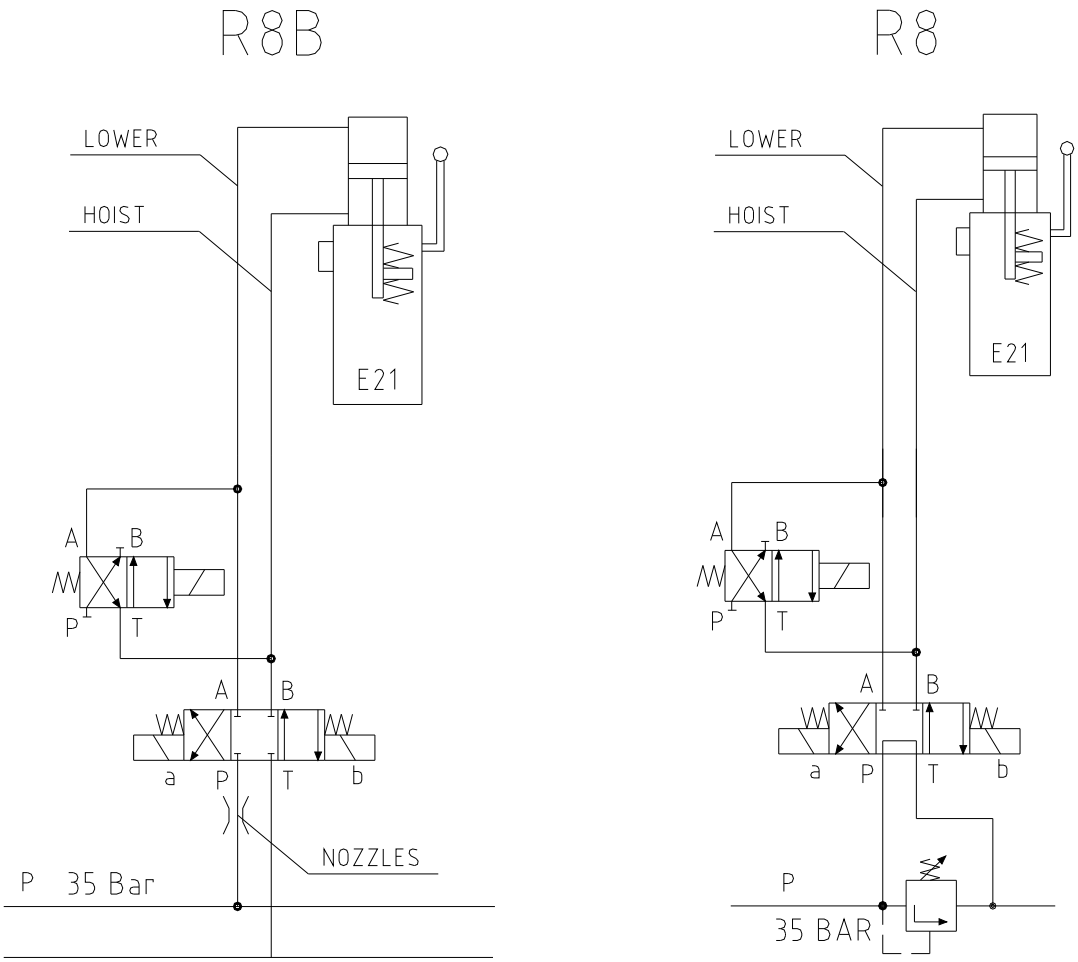

Fig. 5 Servo system R8B and R8

7.0 ERRORS AND TROUBLESHOOTING.

Even when an installation is correctly installed problems may turn up after while. To help during faultfinding we will here present a troubleshooting chart, covering the most common symptoms and causes. The system is divided into an electronic part and a hydraulic part. Simply follow the pointer until the error is located or end of procedure.

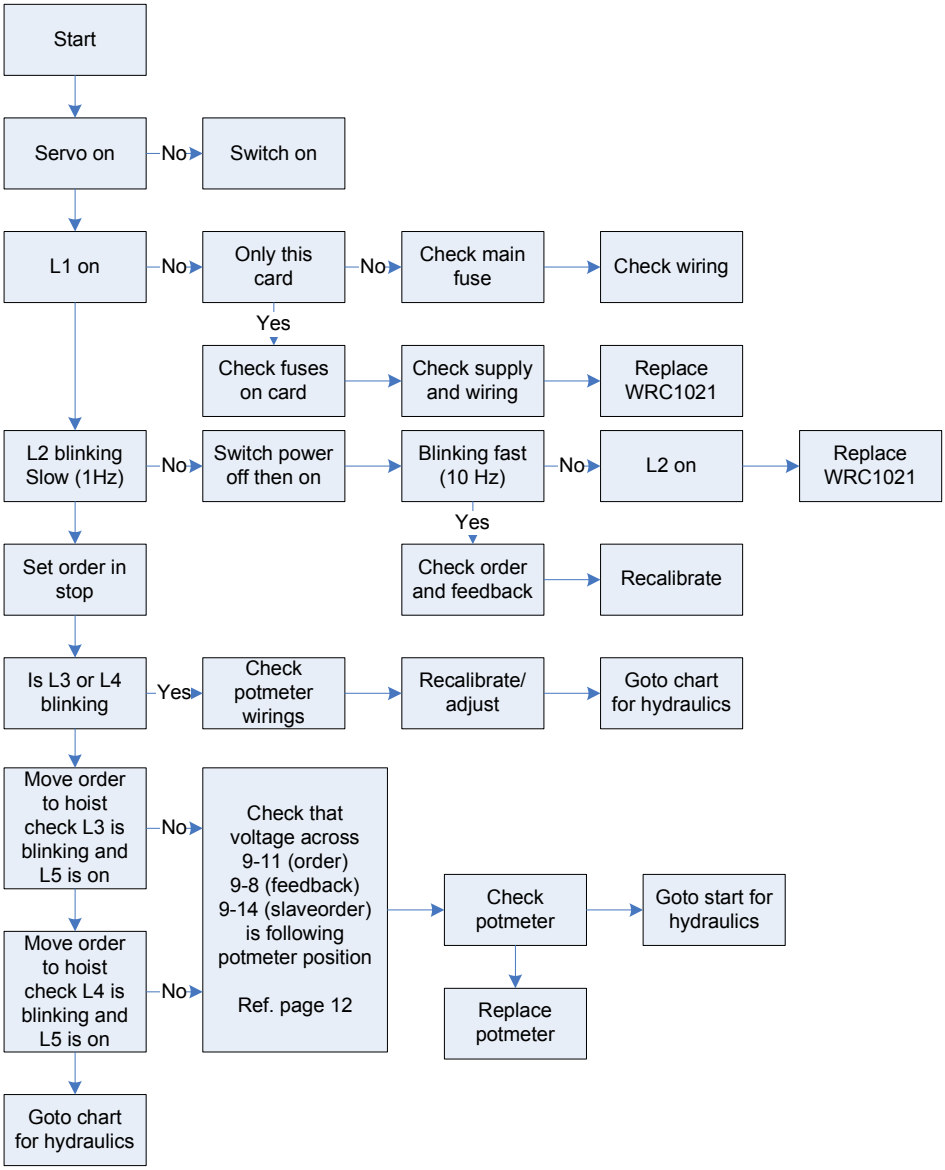

Fig. 6 Trouble-shooting chart electronics

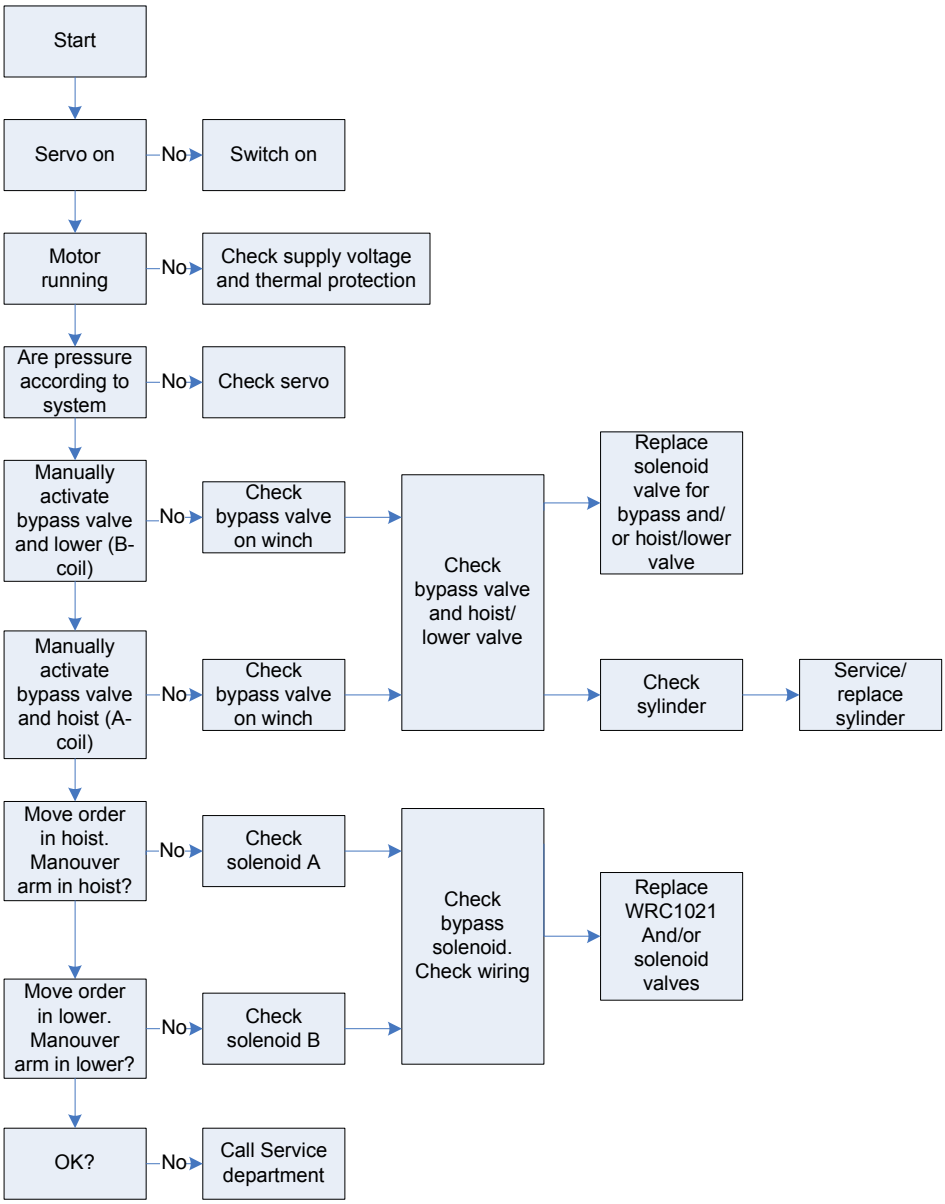

Fig.8 Trouble-shooting chart hydraulics.

Ref. to page 13, servo system principle drawings.