APPENDIX 3: Barrels. Metal pallets

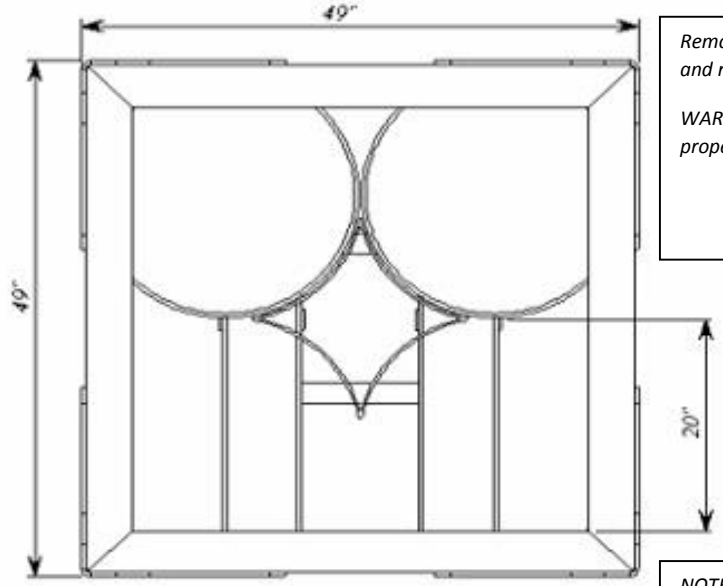

Removable section to permit insertion and removal of the 4 barrels.

WARNING: Make sure angle rails are properly locked into the legs.

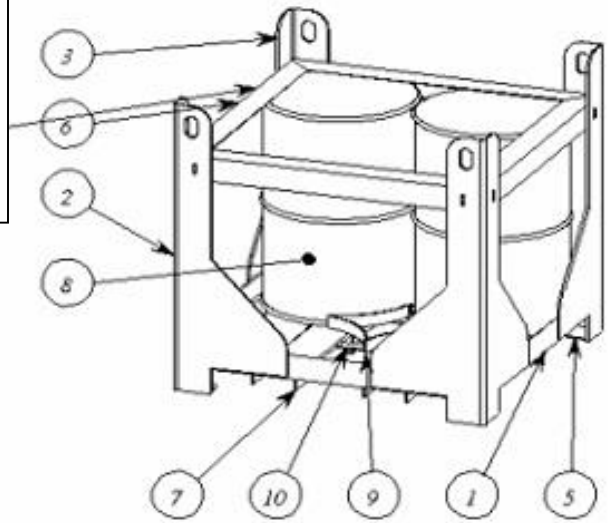

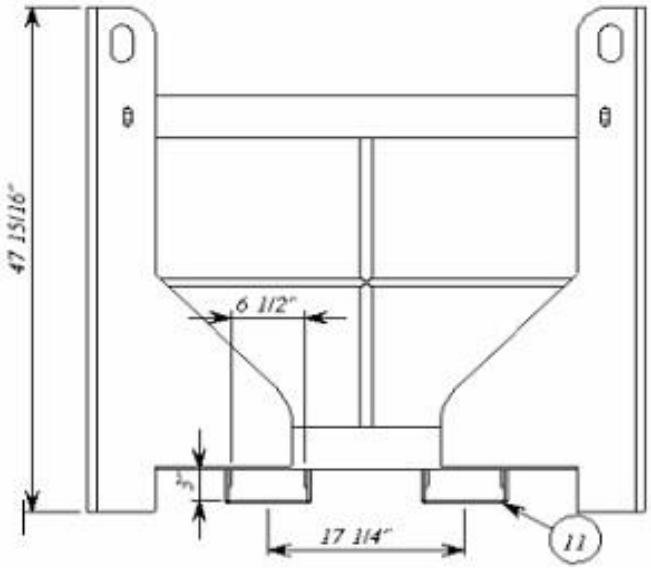

NOTE 1:
Item 1 - Welded cubic frame 4 x 4 x 1/4 thick with 4 legs.
Item 2 - Leg made of 3/8 formed steel (LH model) (see drawing).
Item 3 - Leg made of 3/8 formed steel (RH model).
Item 4 - NOT SHOWN Galvanized steel nuts-&-bolts hardware.
Item 5 - Steel plate 1/4 thick to enclose leg bases (see drawing).
Item 6 - Bolted cubic frame 4 x 4 x 1/4 thick with 4 legs.
Item 7 – Formed-steel angle rail 1/4 thick welded to the frame at the bottom (see drawing).
Item 8 - Steel barrel (23" diam. x 35" high) supplied by others.
Item 9 - Steel section 1/4 x 2 to secure the bottoms of the barrels (see drawing)
Item 10 - Steel supports 1/4 x 2 x 10 long.
Item 11 - Formed-steel support 1/4 x 2 x 7" internal dimensions.

NOTE 2:
Surface finishing prepared as suggested by the Rush-Anode distributor. Two coats of Rush-Anode to be applied, or as recommended by the distributor.

NOTE 3:
Galvanized steel hardware.

DWG. NO.	Rev.
Presentation	0
Date: 13/09/13	Page 1 of 4

16
15