Canada

Public Works and Government Services Canada
(PWGSC)

ARCHITECTURAL SPECIFICATIONS

Volume 1

PWGSC

Relocation of the Canada Revenue Agency

200, boul. René-Lévesque Ouest, Montréal
6th floor West Tower
R.078221.001

Issued for bid
January 20th, 2017

n° dossier BFAD : 160822

BISSONFORTIN
ARCHITECTURE + DESIGN

SPECIFICATIONS
Issued for bid, January 20th, 2017

ARCHITECTS : BISSON FORTIN ARCHITECTURE + DESIGN

Danielle Bisson, architect PA LEED BD+C

END OF SECTION

SPECIFICATIONS
Issued for bid, January 20th, 2017

PAGEAU MOREL

MECHANICAL

INGÉNIEUR · ENGINEER
Eric Lopez
5040407
QUÉBEC

2017-01-20

Éric Lopez, Eng.

ELECTRICAL

INGÉNIEUR
Simon Pilon
5039707
QUÉBEC

2017-01-20

Simon Pilon, Eng.

END OF SECTION

VOLUME 1 :

NUMBER OF PAGES

DIVISION 00 – PROCUREMENT AND CONTRACTING REQUIREMENTS

DIVISION 01 – GENERAL REQUIREMENTS

DIVISION 02 – EXISTING CONDITIONS

DIVISION 06 – WOOD, PLASTICS AND COMPOSITES

DIVISION 07 – THERMAL AND MOISTURE PROTECTION

NUMBER OF PAGES

DIVISION 08 – THERMAL AND MOISTURE PROTECTION

DIVISION 09 – FINISHES

DIVISION 10 – SPECIALITIES

ANNEX A

ANNEX B

ANNEX C

VOLUME 2 :

NUMBER OF PAGES

DIVISION 25 – INTEGRATED AUTOMATION

DIVISION 26 – ELECTRICAL

DIVISION 27 – TELECOMMUNICATIONS

DIVISION 28 –ELECTRONIC SAFETY AND SECURITY

END OF SECTION

ARCHITECTURAL

SPECIFICATIONS (VOLUME 1) :

Architectural specifications, Issued for bid, dated of January 20th, 2017 prepared by BISSON FORTIN ARCHITECTURE + DESIGN.

ARCHITECTURAL DRAWINGS :

A01	FRONT PAGE
A02	DEMOLITION PLAN – 6TH FLOOR WEST TOWER
A03	DEMOLITION CEILING PLAN – 6TH FLOOR WEST TOWER
A04	NEW FLOOR PLAN – 6TH FLOOR WEST TOWER
A05	NEW REFLECTED CEILING PLAN – 6TH FLOOR WEST TOWER
A06	FURNITURE FLOOR PLAN - 6TH FLOOR WEST TOWER
A07	FLOOR FINISHES - 6TH FLOOR WEST TOWER
A08	PAINT FINISHES
A09	WALL TYPE DETAILS
A10	DETAILS
A11	FURNITURE DETAILS
A12	CEILING DETAILS

STRUCTURAL

STRUCTURAL DRAWINGS :

S01	NEW MOVABLE PARTITION SUPPORT DETAIL

MECHANICAL AND ELECTRICAL

SPECIFICATIONS (VOLUME 2) :

Mechanical and electrical specifications, Issued for bid, dated of January 20th, 2017 prepared by PAGEAU MOREL ET ASSOCIÉS INC.

MECHANICAL DRAWINGS :

M01	LEGEND
M02	FIRE PROTECTION
M03	FIRE PROTECTION
M04	PLUMBING/PIPING
M05	PLUMBING
M06	VENTILATION
M07	VENTILATION
M08	DETAILS
M09	DETAILS

ELECTRICAL DRAWINGS :

E01	ELECTRICAL LEGEND
E02	LIGHTING – 6TH FLOOR – DEMOLITION
E03	LIGHTING – 6TH FLOOR – MODIFIED
E04	SERVICES – 6TH FLOOR – DEMOLITION
E05	SERVICES – 6TH FLOOR - MODIFIED
E06	AUXILIARY SERVICES – 6TH FLOOR – DEMOLITION
E07	AUXILIARY SERVICES – 6TH FLOOR – MODIFIED
E08	ELECTRICAL DETAILS
E09	ELECTRICAL PANELS
E10	ELICTRICAL PANELS
E11	INSTRUSTION ALARM – 6TH FLOOR – FOR INFORMATION

END OF SECTION

PART 1 – GENERAL

1.1 BUILDING OPERATIONS

.1 No work shall inhibit regular building operations of the Guy-Favreau Complex.

1.2 WORK BY OTHERS

.1 Co-operate with other Contractors in carrying out their respective works and carry out instructions from Department Representative.

.2 Co-ordinate work with that of other Contractors. If any part of work under this Contract depends for its proper execution or result upon work of another Contractor, report promptly to the Departmental Representative in writing, any defects which may interfere with proper execution of Work.

- .1 Periodically, some work may be executed by other suppliers designated by the Department Representative. The Contractor will be advised two (2) days in advance, except in case of emergency where in the designated suppliers must have access without delay.
- .2 An annual fire drill is rendered at the building, all activity must be interrupted for a period of half a day.
- .3 A portion of the work is to be executed by the Departmental Representative, but must still be coordinated by the Contractor:
  - .1 Network Wiring (in 2 or 3 phases): by Shared Services Canada (SSC).
  - .2 Security and monitoring systems: supplied and installed by Chubb Edwards, with the exception of room 600-01.
  - .3 Furniture: supplied and installed by a supplier designated by the Departmental Representative.
  - .4 Audio-Visual: supplied and installed by a supplier designated by the Departmental Representative.
- .4 A portion of the work included in the Contractor’s contract must exclusively be executed by the suppliers designated by the Departmental Representative, and coordinated by the Contractor:
  - .1 High density mobile shelving system: Prisma Storage Solutions. Two (2) existing shelving systems are to be moved and installed on site.
  - .2 Fire Alarm Systems: Chubb Edwards, refer to mechanical and electrical documents.
  - .3 DDC Control System for room 600-01: VCI Controls Inc., refer to mechanical and electrical documents,
  - .4 Base building security: Altel, refer to mechanical and electrical documents.
  - .5 Combination door locks: Excel Locksmith.
- .5 A portion of the equipment and of the products will be pre-purchased. They will be supplied by the Departmental Representative, the Contractor must retrieve them from storage, transport and install them following contract document recommendations.
  - .1 Heat pumps, stored in the building on level S1. Refer to mechanical and electrical documents.
  - .2 Ceiling (suspension only), stored in the supplier’s storage space. Refer to architectural documents.
  - .3 F1 Lighting fixtures and bulbs.
  - .4 Combination door locks: Excel Locksmith.
- .6 The empty conduits, the outlets and wiring are included in the contract, refer to mechanical and electrical documents.

1.3 FUTURE WORK

.1 Ensure that work does not impede on future work designated zones.

1.4 WORK SEQUENCE

.1 Construction work will be carried in a single phase, so that the Departmental Representative may be allowed to occupy the space on the designated date and execute work not included in the present contract.

.2 Co-ordinate Progress Schedule for the work with the Departmental Representative during construction.

.3 Stages of work:
.1 Plan work sequence of the present contract and that of contracts executed by others.

.4 Maintain fire access/control.

1.5 CONTRACTOR USE OF PREMISES

.1 Limit use of premises for storage, to allow:
.1 Work by other contractors;

.2 Co-ordinate use of premises under direction of the Departmental Representative.

.3 Obtain and pay for use of additional storage or work areas needed for operations under this Contract. Refer to section 01 14 00 and to drawings for the spaces allocated to the Contractor.

.4 Remove or alter existing work to prevent injury or damage to portions of existing work which remain.

.5 Repair or replace portions of existing work which have been altered during construction operations to match existing or adjoining work, as directed by the Department Representative.

.6 At completion of operations, condition of existing work: equal to or better than that which existed before new work started.

1.6 DEPARTMENTAL REPRESENTATIVE OCCUPANCY

.1 Owner will occupy premises during entire construction period for execution of normal operations.

.2 Co-operate with Departmental Representative in scheduling operations to minimize conflict and to facilitate Departmental Representative usage of the premises.

1.7 PARTIAL DEPARTMENTAL REPRESENTATIVE OCCUPANCY

.1 Schedule and substantially complete designated portions of Work for Owner's occupancy prior to Substantial Performance of entire work.

.2 Departmental Representative will occupy designated areas for purpose of storage of furnishings, equipment, and installation of equipment. (Refer to article 1.2.)

.3 Execute Certificate of Substantial Performance for each designated portion of work prior to

Departmental Representative occupancy. Contractor shall allow:
.1 Access for Departmental Representative personnel;
.2 Operation of HVAC and electrical systems;

.4 On occupancy, Owner will provide for occupied areas:
.1 Operation of HVAC and electrical systems;
.2 Maintenance;
.3 Security;

1.8 PRE-PURCHASED EQUIPMENT

.1 Certain items of equipment have been pre-purchased (Heat pumps, acoustic ceiling suspension and F1 lighting fixtures and bulbs). Refer to Section 09 53 00.01 and 23 81 40.

.2 Purpose for pre-purchasing this equipment is to ensure delivery to site within required project completion schedule. Obtain necessary shop drawings from Departmental Representative and proceed to co-ordinate details for installation, expedite, receive, unload, install, connect and test specified equipment, and be responsible for warrantee.

.3 Equipment specifications for pre-purchased items are included at end of project specification, for coordination only.

.4 Notify Departmental Representative in writing at least 30 calendar days in advance of date on which materials and equipment are required.
.1 Pick up materials and equipment no later than 30 calendar days after such date.

.5 Receive equipment and store and process equipment until installation.

1.9 DEPARTMENTAL REPRESENTATIVE FURNISHED ITEMS

.1 Departmental Representative Responsibilities:
.1 Arrange for delivery of shop drawings, product data, samples, manufacturer's instructions, and certificates to Contractor.
.2 Submit claims for transportation damage.
.3 Arrange for replacement of damaged, defective or missing items.

.2 Contractor Responsibilities:
.1 Receive and unload products at site.
.2 Inspect deliveries jointly with Owner; record shortages, and damaged or defective items.
.3 Handle products at site, including uncrating and storage.
.4 Protect products from damage, and from exposure to elements.
.5 Assemble, install, connect, adjust, and finish products.
.6 Provide installation inspections required by public authorities.
.7 Repair or replace items damaged by Contractor or subcontractor on site (under his control).

.3 Elements purchased by Departmental Representative:
.1 Furniture.
.2 Heat pumps.
.3 Acoustic ceiling suspension.
.4 F1 Lighting fixtures and bulbs.

1.10 ALTERATIONS, ADDITIONS OR REPAIRS TO EXISTING BUILDING

.1 Execute work with least possible interference or disturbance to building operations, occupants,

public and normal use of premises. Arrange with Departmental Representative to facilitate execution of work.

.2 Use only existing elevator #3, and lift in building for moving workers and material. Refer to section 01 14 00 and to drawings for the spaces allocated to the Contractor.
- .1 Protect walls of passenger elevators, to approval of Departmental Representative prior to use.
- .2 Accept liability for damage, safety of equipment and overloading of existing equipment.

1.11 DOCUMENTS REQUIRED

.1 Maintain at job site, one copy each document as follows:
- .1 Contract Drawings.
- .2 Specifications.
- .3 Addenda.
- .4 Reviewed Shop Drawings.
- .5 List of Outstanding Shop Drawings.
- .6 Change Orders.
- .7 Other Modifications to Contract.
- .8 Field Test Reports.
- .9 Copy of Approved Work Schedule.
- .10 Health and Safety Plan and Other Safety Related Documents.
- .11 Other documents as specified.

PART 2 – PRODUCTS

2.1 NOT USED

.1 .Not used.

PART 3 – EXECUTION

3.1 NOT USED

.1 Not used.

END OF SECTION

PART 1 - GENERAL

1.1 RELATED REQUIREMENTS

.1 Building Orientation Guide (Annex A).

1.2 USE OF SITE AND FACILITIES

.1 Execute work with least possible interference or disturbance to normal use of premises. Make arrangements with Departmental Representative to facilitate work as stated.

.2 Maintain existing services to building and provide for personnel and vehicle access.

.3 Where security is reduced by work provide temporary means to maintain security.

.4 Departmental Representative will assign sanitary facilities for use by Contractor's personnel. Keep facilities clean.

.5 Use only existing elevator # 3 and lift in building for moving workers and material.
- .1 Protect walls of passenger elevators, to approval of Departmental Representative prior to use.
- .2 Accept liability for damage, safety of equipment and overloading of existing equipment.

.6 Closures: protect work temporarily until permanent enclosures are completed.

.7 For storage purposes only, a 23 m^2 closed storage space with metal grills located in a locked room on level S1, will be available to the Contractor. The room will be S104-12.

1.3 ALTERATIONS, ADDITIONS OR REPAIRS TO EXISTING BUILDING

.1 Execute work with least possible interference or disturbance to building operations, occupants, public and normal use of premises. Arrange with Departmental Representative to facilitate execution of work.

1.4 EXISTING SERVICES

.1 If the contractor must interrupt any mechanical or electrical systems, the work must be done outside of the work hours. The contractor will require GFC head of operation and follow his direction. Notify the Departmental Representative 48h before the interruption work to get the head of operation’s written authorization. Ensure that the interruption be as short as possible.

.2 Provide the Departmental Representative a work schedule related to the interruption of existing installation.

.3 Protect, move or maintain all functional service lines. If non-functional piping id discovered during the work, dismantle as directed by the Departmental Representative

.4 When non-listed utility lines are discovered, immediately notify the Departmental Representative.

.5 Record location of all utility lines that are maintained, moved or abandoned.

1.5 SPECIAL REQUIREMENTS

.1 The scope of the work will be completed within 23 weeks following the official notice of the award

of the contract, excluding holidays and the 2 construction weeks during summer vacation.

.2 Work schedule:

.1 In order to not disturb building occupants on other floors, the Contractor is to execute a portion of the work outside of regular building work hours:

.1 Work to be executed during the day and/or in the evening : 6th floor non noisy work:

.1 Cabling and wiring;
.2 Electrical finishes (installation of light fixtures, passing of the wires, etc);
.3 Gypsum wall plastering and sanding;
.4 Floor finishes (carpet, baseboards, marmoleum, tiles, etc);
.5 Paint finishing;
.6 Installation of acoustic ceiling (tiles);
.7 Installation of door hardware;
.8 Installation of security and monitoring;
.9 Installation of blinds;
.10 Installation of signage;

.2 Work to be executed in the evening or at night exclusively :

.1 Mechanical finishing (plumbing and ventilation);
.2 Gypsum board installation;
.3 Doors, door frames and glazing installation;
.4 Assembly and installation of office furniture;
.5 Assembly and installation of high density mobile shelving system including the floor finish;
.6 Installation of acoustic ceiling (suspension);
.7 Assembly and installation of millwork (kitchenette, photocopy areas, etc);
.8 All other work on other floors (8th floor);

.2 The portion of work to be executed in the evening or at night exclusively are to be executed between 18h00 and 7h00 from Monday to Thursday.

.3 The portion of work executed on the weekend is allowed between Friday evening 18h00 and Monday morning 7h00.

.4 During construction, the building will be inaccessible to the Contractor on 2 separate weekends, at which point work will need to cease. The Contractor must coordinate his work with the Departmental Representative excluding these 2 weekends (dates are to be determined).

.5 Carry out noise generating work from 18:00 to 22:00 o'clock, as prescribed in the Building Orientation Guide (Annex A). The noise generating work includes drilling, usage of impact tools, hammers, any type of work generating vibrations in concrete slabs, pumping of oil from cylinders, all type of work generating noise or vibrations that can be perceived in the areas occupied by offices, courtrooms or dwellings, etc.

.3 Submit schedule in accordance with Section 01 32 16.07 - Construction Progress Schedule - Bar (GANTT) Chart.

.4 Make sure the loading dock is accessible and operational at all times.

.5 When the security measures are lessened because of the scope of the work, take all necessary measures to maintain security on site.

.6 When important smells disturb occupants of the building, the Departmental Representative can shut down the work site at all time.

.7 The contractor will locate the trash container at the loading dock as indicated by the Departmental Representative.

.8 Ensure Contractor's personnel employed on site become familiar with and obey regulations including safety, fire, traffic and security regulations.

.9 Keep within limits of work and avenues of ingress and egress.

.10 Ingress and egress of Contractor vehicles at site is limited to the loading dock. The loading dock must only allow deliveries or loading equipment or material. Refer to the Building Orientation Guide (Annex A) for schedule and applicable conditions. The Contractor’s personnel may use the building’s public parking area at their own cost (as availability permit).

.11 Deliver materials outside of peak traffic hours 17:00 to 07:00 unless otherwise approved by Departmental Representative.

1.6 SECURITY

.1 Where security has been reduced by Work of Contract, provide temporary means to maintain security.

.2 Security clearances:
- .1 Personnel employed on this project will be subject to security check. Obtain clearance, as instructed, for each individual who will require to enter premises.
- .2 Obtain requisite clearance, as instructed, for each individual required to enter premises.
- .3 Personnel will be checked daily at start of work shift and provided with pass which must be worn at all times. Pass must be returned at end of work shift and personnel checked out.
- .4 Contractor's personnel will require satisfactory RCMP initiated security screening in order to complete Work in premises and on site.

.3 Security escort:
- .1 Personnel employed on this project must be escorted when executing work in non-public areas during normal working hours. Personnel must be escorted in all areas after normal working hours.
- .2 Submit an escort request to Departmental Representative at least 2 days before service is needed. For requests submitted within time noted above, costs of security escort will be paid for by Departmental Representative. Cost incurred by late request will be Contractor's responsibility.
- .3 Any escort request may be cancelled free of charge if notification of cancellation is given at least 4 hours before scheduled time of escort. Cost incurred by late request will be Contractor's responsibility.
- .4 Calculation of costs will be based on average hourly rate of security officer for minimum of 8 hours per day for late service request and of 4 hours for late cancellations.

1.7 BUILDING SMOKING ENVIRONMENT

.1 Comply with smoking restrictions. Smoking is not permitted.

PART 2 – PRODUCTS

2.1 NOT USED

.1 Not Used.

PART 3 – EXECUTION

3.1 NOT USED

.1 Not Used.

END OF SECTION

PART 1 – GENERAL

1.1 RELATED REQUIREMENTS

.1 Not applicable.

1.2 ADMINISTRATIVE

.1 Schedule and administer project meetings throughout the progress of the work. The meeting will take place once every two weeks.

.2 Besides the first meeting, provide the Departmental Representative with a written notice five days prior to the meeting date.

.3 All meetings will take place at the Guy-Favreau Complex.

.4 The Departmental Representative will assist and preside the meetings.

.5 The Departmental Representative will record the meeting minutes and distribute within 5 days after the meeting date.

.6 The contractor must assist and invite all interested parties.

.7 The Contractor, Subcontractors and suppliers' representatives attending meetings, will be qualified and authorized to act on behalf of each represented party.

1.3 PRECONSTRUCTION MEETING

.1 Within days after award of Contract, the Departmental Representative will request a meeting of all parties in contract to discuss and resolve administrative procedures and responsibilities.

.2 Departmental Representative, Contractor, major Subcontractors, field inspectors and supervisors will be in attendance (other subcontractors at the request of the Departmental Representative).

.3 The agenda will be prepared by the Departmental Representative

1.4 PROGRESS MEETINGS

.1 Establish a meeting schedule to be held every 2 weeks during the course of the Work and 2 weeks prior to completion of the Work.

.2 Contractor, major Subcontractors, field inspectors and supervisors, and Departmental Representative involved in Work, are to be in attendance.

.3 Notify parties a minimum of 5 days prior to meetings.

.4 Minutes of meetings will be written and transmitted by the Departmental Representative within 2 working days of the meeting date.

.5 Agenda to include the following:
- .1 Review, approval of previous meeting minutes.
- .2 Review of Work progress since previous meeting.
- .3 Field observations, problems and conflicts.
- .4 Problems which impede construction schedule.

.5 Review of off-site fabrication delivery schedules.
.6 Corrective measures and procedures to regain projected schedule.
.7 Revision to construction schedule.
.8 Progress schedule, during succeeding work period.
.9 Review submittal schedules: expedite as required.
.10 Maintenance of quality standards.
.11 Review proposed changes which can have an impact on construction schedule and on completion date.
.12 Other business.

PART 2 – PRODUCTS

2.1 NOT USED

.1 Not Used.

PART 3 – EXECUTION

3.1 NOT USED

.1 Not Used.

END OF SECTION

PART 1 – GENERAL

1.1 RELATED REQUIREMENTS

.1 Non applicable

1.2 DEFINITIONS

.1 Activity: element of Work performed during course of Project. Activity normally has expected duration, and expected cost and expected resource requirements. Activities can be subdivided into tasks.

.2 Bar Chart (GANTT): graphic display of schedule-related information. In typical bar chart, activities or other Project elements are listed down left side of chart, dates are shown across top, and activity durations are shown as date-placed horizontal bars. Generally Bar Chart should be derived from a commercially available computerized project management system.

.3 Baseline: original approved plan (for project, work package, or activity), plus or minus approved scope changes.

.4 Construction Work Week: Monday to Friday, inclusive, will provide five day work week and define schedule calendar working days as part of Bar Chart (GANTT) submission.

.5 Duration: number of work periods (not including holidays or other nonworking periods) required to complete activity or other project element. Usually expressed as workdays or workweeks.

.6 Master Plan: summary-level schedule that identifies major activities and key milestones.

.7 Milestone: significant event in project, usually completion of major deliverable.

.8 Project Schedule: planned dates for performing activities and the planned dates for meeting milestones. Dynamic, detailed record of tasks or activities that must be accomplished to satisfy Project objectives. Monitoring and control process involves using Project Schedule in executing and controlling activities and is used as basis for decision making throughout project life cycle.

.9 Project Planning, Monitoring and Control System: overall system operated by Departmental Representative to enable monitoring of project work in relation to established milestones.

1.3 REQUIREMENTS

.1 Ensure Master Plan and Detail Schedules are practical and remain within specified Contract duration.

.2 Plan to complete Work in accordance with prescribed milestones and time frame.

.3 Limit activity durations to maximum of approximately 10 working days, to allow for progress reporting.

.4 Ensure that it is understood that Award of Contract or time of beginning, rate of progress, Interim Certificate and Final Certificate as defined times of completion are of essence of this contract.

1.4 ACTION AND INFORMATIONAL SUBMITTALS

.1 Provide submittals in accordance with Section 01 33 00 - Submittal Procedures.

.2 On the Bar Chart schedule, specify deadlines for verification and approbation of the schedule and for deadline of the work.

.3 Specify dates when documents and samples approved by the Departmental Representative must be provided.

1.5 MASTER PLAN

.1 Structure schedule to allow orderly planning, organization and execution of Work as a Bar Chart (GANTT).

.2 Within 5 working days of Award of Contract, submit a Bar Chart (GANTT) Chart to Departmental Representative, which will serve as a Master Plan for project planning, monitoring and progress reporting.

.3 Departmental Representative will review and return revised schedules within 5 working days.

.4 Revise impractical schedule and resubmit within 5 working days.

.5 Accepted revised schedule will become Master Plan and be used as baseline for updates.

.6 Submit the execution schedule within 5 working days after acceptance of the Master Plan.

.7 Submit revised schedule of the Work with each payment request or whenever requested by the Departmental Representative.

.8 Distribute copies of the revised calendar to:
- .1 Site office;
- .2 Subcontractors;
- .3 Interested parties

.9 Require recipient to report any issues regarding compliance with the indicated deadlines within 5 days of receiving the schedule.

1.6 PROJECT SCHEDULE

.1 Develop a detailed Project Schedule derived from Master Plan.

.2 Ensure detailed Project Schedule includes as minimum milestone and activity types as follows:
- .1 Award of contract.
- .2 Shop Drawings, Samples.
- .3 Permits.
- .4 Mobilization.
- .5 Temporary protection.
- .6 Demolition.
- .7 Partitions.
- .8 Interior Architectural elements (Walls, Floors and Ceiling).
- .9 Doors, door frames and door hardware.
- .10 Plumbing.
- .11 Lighting.
- .12 Electrical.
- .13 Piping.
- .14 Controls.
- .15 Heating, Ventilating, and Air Conditioning.
- .16 Millwork.

.17 Painting.
.18 Fire Systems.
.19 Cable and wiring work by the Departmental Representative.
.20 Relocation of the high density mobile shelving system.
.21 Security and monitoring work by the Departmental Representative.
.22 Testing and Commissioning.
.23 Long delivery supplied equipment and material.
.24 Engineer supplied equipment required dates.

1.7 PROJECT SCHEDULE REPORTING

.1 Update Project Schedule once every two weeks, reflecting activity changes and completions, as well as activities in progress.

.2 Include as part of Project Schedule, narrative report identifying Work status to date, comparing current progress to baseline, presenting current forecasts, defining problem areas, anticipated delays and impact with possible mitigation.

1.8 PROJECT MEETINGS

.1 Discuss Project Schedule at regular site meetings, identify activities that are behind schedule and provide measures to regain slippage. Activities considered behind schedule are those with projected start or completion dates later than current approved dates shown on baseline schedule.

.2 Weather related delays with their remedial measures will be discussed and negotiated.

PART 2 – PRODUCTS

2.1 NOT USED

.1 Not Used.

PART 3 – EXECUTION

3.1 NOT USED

.1 Not Used.

END OF SECTION

PART 1 – GENERAL

1.1 ADMINISTRATIVE

.1 Submit to Departmental Representative submittals listed for review. Submit promptly and in orderly sequence to not cause delay in Work. Failure to submit in ample time is not considered sufficient reason for extension of Contract Time and no claim for extension by reason of such default will be allowed.

.2 Do not proceed with Work affected by submittal until review is complete.

.3 Present shop drawings, product data, samples and mock-ups in SI Metric units.

.4 Where items or information is not produced in SI Metric units converted values are acceptable.

.5 Review submittals prior to submission to Departmental Representative. This review represents that necessary requirements have been determined and verified, or will be, and that each submittal has been checked and co-ordinated with requirements of Work and Contract Documents. Submittals not stamped, signed, dated and identified as to specific project will be returned without being examined and considered rejected.

.6 Notify Departmental Representative, in writing at time of submission, identifying deviations from requirements of Contract Documents stating reasons for deviations.

.7 Verify field measurements and affected adjacent Work are co-ordinated.

.8 Contractor's responsibility for errors and omissions in submission is not relieved by Departmental Representative's review of submittals.

.9 Contractor's responsibility for deviations in submission from requirements of Contract Documents is not relieved by Departmental Representative review.

.10 Keep one reviewed copy of each submission on site.

1.2 SHOP DRAWINGS AND PRODUCT DATA

.1 The term "shop drawings" means drawings, diagrams, illustrations, schedules, performance charts, brochures and other data which are to be provided by Contractor to illustrate details of a portion of Work.

.2 Submit drawings stamped and signed by professional engineer registered or licensed in Province of Quebec, in Canada.

.3 Indicate materials, methods of construction and attachment or anchorage, erection diagrams, connections, explanatory notes and other information necessary for completion of Work. Where articles or equipment attach or connect to other articles or equipment, indicate that such items have been co-ordinated, regardless of Section under which adjacent items will be supplied and installed. Indicate cross references to design drawings and specifications.

.4 Allow 10 days for Departmental Representative's review of each submission.

.5 Adjustments made on shop drawings by Departmental Representative are not intended to change Contract Price. If adjustments affect value of Work, state such in writing to Departmental Representative prior to proceeding with Work.

.6 Make changes in shop drawings as Departmental Representative may require, consistent with Contract Documents. When resubmitting, notify Departmental Representative in writing of revisions other than those requested.

.7 Accompany submissions with transmittal letter, containing:
- .1 Date.
- .2 Project title and number.
- .3 Contractor's name and address.
- .4 Identification and quantity of each shop drawing, product data and sample.
- .5 Other pertinent data.

.8 Submissions include:
- .1 Date and revision dates.
- .2 Project title and number.
- .3 Name and address of:
  - .1 Subcontractor.
  - .2 Supplier.
  - .3 Manufacturer.
- .4 Contractor's stamp, signed by Contractor's authorized representative certifying approval of submissions, verification of field measurements and compliance with Contract Documents.
- .5 Details of appropriate portions of Work as applicable:
  - .1 Fabrication.
  - .2 Layout, showing dimensions, including identified field dimensions, and clearances.
  - .3 Setting or erection details.
  - .4 Capacities.
  - .5 Performance characteristics.
  - .6 Standards.
  - .7 Operating weight.
  - .8 Wiring diagrams.
  - .9 Single line and schematic diagrams.
  - .10 Relationship to adjacent work.

.9 After Departmental Representative's review, distribute copies.

.10 Submit electronic copy of shop drawings for each requirement requested in specification Sections and as Departmental Representative may reasonably request.

.11 Submit 1 electronic copy of product data sheets or brochures for requirements requested in specification Sections and as requested by Departmental Representative where shop drawings will not be prepared due to standardized manufacture of product.

.12 Submit electronic copies of test reports for requirements requested in specification Sections and as requested by Departmental Representative.
- .1 Report signed by authorized official of testing laboratory that material, product or system identical to material, product or system to be provided has been tested in accord with specified requirements.
- .2 Testing must have been within 3 years of date of contract award for project.

.13 Submit electronic copies of certificates for requirements requested in specification Sections and as requested by Departmental Representative.
- .1 Statements printed on manufacturer's letterhead and signed by responsible officials of manufacturer of product, system or material attesting that product, system or material meets specification requirements.

.2 Certificates must be dated after award of project contract complete with project name.

.14 Submit electronic copies of manufacturers instructions for requirements requested in specification Sections and as requested by Departmental Representative.

.1 Pre-printed material describing installation of product, system or material, including special notices and Material Safety Data Sheets concerning impedances, hazards and safety precautions.

.15 Submit electronic copies of Manufacturer's Field Reports for requirements requested in specification Sections and as requested by Departmental Representative.

.16 Documentation of the testing and verification actions taken by manufacturer's representative to confirm compliance with manufacturer's standards or instructions.

.17 Submit electronic copies of Operation and Maintenance Data for requirements requested in specification Sections and as requested by Departmental Representative.

.18 Delete information not applicable to project.

.19 Supplement standard information to provide details applicable to project.

.20 If upon review by Departmental Representative, no errors or omissions are discovered or if only minor corrections are made, they will be returned and fabrication and installation of Work may proceed. If shop drawings are rejected, noted copy will be returned and resubmission of corrected shop drawings, through same procedure indicated above, must be performed before fabrication and installation of Work may proceed.

.21 The review of shop drawings by Public Works and Government Services Canada (PWGSC) is for sole purpose of ascertaining conformance with general concept.

.1 This review shall not mean that PWGSC approves detail design inherent in shop drawings, responsibility for which shall remain with Contractor submitting same, and such review shall not relieve Contractor of responsibility for errors or omissions in shop drawings or of responsibility for meeting requirements of construction and Contract Documents.

.2 Without restricting generality of foregoing, Contractor is responsible for dimensions to be confirmed and correlated at job site, for information that pertains solely to fabrication processes or to techniques of construction and installation and for co-ordination of Work of sub-trades.

1.3 SAMPLES

.1 Submit for review samples in duplicate as requested in respective specification Sections. Label samples with origin and intended use.

.2 Deliver samples prepaid to Departmental Representative's business address site office.

.3 Notify Departmental Representative in writing, at time of submission of deviations in samples from requirements of Contract Documents.

.4 Where colour, pattern or texture is criterion, submit full range of samples.

.5 Adjustments made on samples by Departmental Representative are not intended to change Contract Price. If adjustments affect value of Work, state such in writing to Departmental Representative prior to proceeding with Work.

.6 Reviewed and accepted samples will become standard of workmanship and material against which installed Work will be verified.

1.4 MOCK-UPS

.1 Erect mock-ups in accordance with 01 45 00 - Quality Control.

1.5 CERTIFICATES AND TRANSCRIPTS

.1 Immediately after award of Contract, submit Workers' Compensation Board status.

PART 2 – PRODUCTS

2.1 NOT USED

.1 Not Used.

PART 3 – EXECUTION

3.1 NOT USED

.1 Not Used.

END OF SECTION

PART 1 GENERAL

1.1 RELATED REQUIREMENTS

.1 Building Orientation Guide (Annex A).

1.2 REFERENCES

.1 Canada Labour Code - Part II, Canadian Occupational Safety and Health Regulations.

.2 Canadian Standards Association (CSA)

.3 Workplace Hazardous Materials Information System (WHMIS)

.1 Material Safety Data Sheet (MSDF)

.4 Act Respecting Occupational Health and Safety, R.S.Q. Chapter S-2.1.

.5 Construction Safety Code, S-2.1, r.4.

1.3 SUBMITTALS

.1 Submit the documents required according to section 01 33 00 - Documents and samples to be submitted.

.2 Submit to Departmental Representative, the site-specific safety program, as outlined in 1.8 at least 10 days prior to start of work. The Contractor must review his program during the course of the project if any change occurs in work methods or site conditions. The Departmental Representative may, after receiving the program or at any time during the project, ask the Contractor to update or modify the program in order to better reflect the reality of the construction site and activities. The Contractor must make the required changes before work begins.

.3 Submit to Departmental Representative the site inspection sheet, duly completed, at the intervals indicated in 1.12.1.

.4 Submit to Departmental Representative within 24 hours a copy of any inspection report, correction notice or recommendation issued by federal or provincial inspectors.

.5 Submit to Departmental Representative within 24 hours an investigation report for any accident involving injury and any incident exposing a potential hazard.

.6 Submit to Departmental Representative all safety data sheets for hazardous material to be used at the site at least three days before they are to be used.

.7 Submit to Departmental Representative copies of all training certificates required for application of the safety program, in particular:
- .1 General construction site safety and health courses;
- .2 Safety officer attestations;
- .3 First aid in the workplace and cardiopulmonary resuscitation;
- .4 Work likely to release asbestos dust;
- .5 Work in confined spaces;
- .6 Lockout procedures;
- .7 Wearing and fitting of individual protective gear;
- .8 Forklift truck;

.9 Positioning platform;
.10 Any other requirement of Regulations or the safety program.

.8 Medical examinations: Wherever legislation, regulations, directives, specification or a safety program require medical examinations, Contractor must:
.1 Prior to start-up, submit to Departmental Representative certificates of medical examination for all concerned supervisory staff and employees who will be on duty when the site opens.
.2 Thereafter, submit without delay certificates of medical examination for any newly hired concerned personnel as and when they start work at the site.

.9 Emergency plan: The emergency plan, as defined in 1.8.3, shall be submitted to Departmental Representative at the same time as the site-specific safety program.

.10 Notice of site opening: Notice of site opening shall be submitted to the Commission *de la santé et de la sécurité du travail* before work begins. A copy of such notice shall be submitted to Departmental Representative at the same time and another posted in full view at the site. During demobilization, a notice of site closing shall be submitted to the CSST, with copy to Departmental Representative.

.11 Plans and certificates of compliance: Submit to the CSST and to Departmental Representative a copy signed and sealed by an engineer member of the OIQ, of all plans and certificates of compliance required pursuant to the Construction Safety Code (S-2.1, r. 6), or by any other legislation or regulation or by any other clause in the specifications or in this contract. Copies of these documents must be on hand at the site at all times.

.12 Certificate of compliance delivered by the CSST: The certificate of compliance is a document delivered by the CSST confirming that the contractor is in rule with the CSST, i.e. that he had pay out all the benefits concerning this contract. This document must be delivered to Departmental Representative at the end of the work.

1.4 HAZARDS ASSESSMENT

.1 The contractor must identify all hazards inherent in each task to be carried out at the site.

.2 The contractor must plan and organize work so as to eliminate hazards at source or promote mutual protection so that reliance on individual protective gear can be kept to a minimum. Where individual protection against falling is required, workers shall use safety harness that meets standard Can - CSA- Z-259.10 - M90. Safety belts shall not be used as protection against falling.

.3 Equipment, tools and protective gear which cannot be installed, fitted or used without compromising the health or safety of workers or the public shall be deemed inadequate for the work to be executed.

.4 All mechanical equipment shall be inspected before delivery to the site. Before using any mechanical equipment, submit to Departmental Representative a certificate of compliance signed by a qualified mechanic. Whenever he suspects a defect or accident risk, Departmental Representative may at any time order the immediate shut-down of equipment and require a new inspection by a specialist of his own choosing.

.5 For use of equipment for lifting persons or materials, ensure that the inspections required by the standards are met and be able to provide a copy of certificates of inspection upon request of Departmental Representative.

1.5 MEETINGS

.1 Contractor decisional representative must attend any meetings at which site safety and health issues are to be discussed

.2 Set up a site safety committee, and convene meetings every in accordance with the Construction Safety Code (S-2.1, r.4).

1.6 LEGAL AND REGULATORY REQUIREMENTS

.1 Comply with all legislation, regulations and standards applicable to the site and its related activities.

.2 Comply with specified standards and regulations to ensure safe operations at site containing hazardous or toxic materials.

.3 Regardless of the publication date shown in the construction safety code, always use the most recent version.

1.7 SITE-SPECIFIC CONDITIONS

.1 At the site, the contactor must take account of the following specific conditions:

- .1 Permanently occupied buildings, by occupants and public.
- .2 Other specialized contractors might be asked to intervene to assure the maintenance of existing equipments that must remain in operation 24 hours a day.
- .3 Evening and night work.
- .4 Circulation in parking lot to come to work, to bring tools and to deliver materials.
- .5 Locking procedures are necessary in this project, and they should be coordinated with building management.
- .6 Interventions on the sprinkler system are required in the work. It will be necessary to limit the duration of these interventions and to plan for ways to minimize risks associated to an occupied building.
- .7 The re-routing of fire alarm must be planned in the work. Coordination must be done with building management.
- .8 Security personnel will be required for displacements. Security personnel will wear safety helmet and security boots.
- .9 The project team will have to be informed together with all stakeholders (BGIS, PWGSC, CCC, subcontractors, etc.) of the risks pertinent to the site, and of the zones to be considered as construction sit, in order to maintain the rules and requirements in the construction areas.
- .10 Compressed air work.
- .11 Noisy work.
- .12 Confined spaces: the Contractor must evaluate each one of the existing confined spaces on his site in accordance with the nature of the intervention as well as the type of work (welding, gas, painting, etc.). Evaluation Forms to be used must minimally contain the information required in the ELF 104 Form. The Contractor must transmit the risks evaluation forms to the Departmental Representative at least five (5) days before start of work in those confined spaces. He must anticipate all applicable costs related to measures that must be followed and rigorously applied in order to respect the requirements related to the security for confined spaces.
- .13 Work in heights.
- .14 Dust-generating work.
- .15 Heavy machinery (trucks, etc.).

1.8 SAFETY AND HEALTH MANAGEMENT

.1 Acknowledge and assume all the tasks and obligations which customarily devolve upon a principal Contractor under the terms of the Act Respecting Occupational Health and Safety (R.S.Q., chapter S-2.1) and the Construction Safety Code (S-2.1, r.4).

.2 Develop a site-specific safety program based on the hazards identified and apply it from the start of project work until close-out is completed. The safety program must take account of all information

appearing in 1.7 and must be submitted to all parties concerned, in accordance with the provisions set forth in 1.3. At a minimum, the site-specific safety program must include:

.1 Company safety and health policy.
.2 A description of the work, total costs, schedule and projected workforce curve.
.3 Flow chart of safety and health responsibility.
.4 The physical and material layout of the site.
.5 First-aid and first-line treatment standards.
.6 Identification of site-specific hazards.
.7 Risk assessment for the tasks to be carried out, including preventive measures and the procedures for applying them.
.8 Training requirements.
.9 Procedures in case of accident/injury
.10 Written commitment from all parties to comply with the prevention program.
.11 A site inspection schedule based on the preventive measures.

.3 The contractor must draw up an effective emergency plan based on the characteristics and constraints of the site and its surroundings. Submit the emergency plan to all parties concerned, pursuant to the provisions of 1.3.The emergency plan must include:

.1 Evacuation procedure;
.2 Identification of resources (police, firefighters, ambulance services, etc.);
.3 Identification of persons in charge at the site;
.4 Identification of those with first-aid training;
.5 Training required for those responsible for applying the plan;
.6 Any other information needed, in the light of the site characteristics.

1.9 RESPONSIBILITIES

.1 No matter the size of the construction site or how many workers are present at the workplace, designate a competent person to supervise and take responsibility for health and safety. Take all necessary measures to ensure the health and safety of persons and property at or in the immediate vicinity of the site and likely to be affected by any of the work.

.2 Take all necessary measures to ensure application of and compliance with the safety and health requirements of the contract documents, applicable federal and provincial regulations and standards as well as the site-specific safety program, complying without delay with any order or correction notice issued by the “Commission de la santé et de la sécurité du travail”.

.3 Take all necessary measures to keep the site clean and in good order throughout the course of the work

1.10 COMMUNICATIONS AND POSTING

.1 Make all necessary arrangements to ensure effective communication of safety and health information at the site. As they arrive on site, all workers must be informed of their rights and obligations pertaining to the site specific safety program. The Contractor must insist on their right to refuse to perform work which they feel may threaten their own health, safety or physical integrity or that of other persons at the site. The Contractor must keep and update a written record of all information transmitted with signatures of all affected workers.

.2 The following information and documents must be posted in a location readily accessible to all workers:

.1 Notice of site opening;
.2 Identification of Owner;
.3 Company OSH policy;
.4 Site-specific safety program;

.5 Emergency plan;
.6 Data sheets for all hazardous material used at the site;
.7 Minutes of site committee meetings;
.8 Names of site committee representatives;
.9 Names of those with first-aid training;
.10 Action reports and correction notices issued by the CSST.

1.11 UNFORESEEN CIRCUMSTANCES

.1 Whenever a source of danger not defined in the specifications or identified in the preliminary site inspection arises as a result of or in the course of the work, immediately suspend work, take appropriate temporary measures to protect the workers and the public and notify Departmental Representative, both verbally and in writing. Then the Contractor must modify or update the site specific safety program in order to resume work in safe conditions.

1.12 INSPECTION OF SITE AND CORRECTION OF HAZARDOUS SITUATIONS

.1 Inspect the work site and complete the site inspection sheet at least once a week.

.2 Immediately take all necessary measures to correct any lapses from legislative or regulatory requirements and any hazards identified by a government inspector, by the Departmental Representative, by the site safety and health coordinator or during routine inspections.

.3 Submit to Departmental Representative written confirmation of all measures taken to correct lapses and hazardous situations.

.4 Work interruption: give the safety officer or, where there is no safety officer, the person assigned to safety and health responsibilities, full authority to order interruption and resuming of work as and when deemed necessary or desirable in the interests of safety and health. This person should always act so that the safety and health of the public and site workers and environmental protection take precedence over cost and scheduling considerations.

.5 Without limiting the scope of sections 1.8 and 1.9, Departmental Representative may order cessation of work if, in his/her view, there is any hazard or threat to the safety or health of site personnel or the public or to the environment.

1.13 BLASTING

.1 Blasting and other use of explosives are forbidden unless authorized in writing by the Departmental Representative.

1.14 POWDER ACTUATED DEVICES

.1 Use of power hammers and other explosive-actuated devices is forbidden.

1.15 HOT WORK

.1 Hot work means any work where a flame is used or a source of ignition may be produced, i.e., riveting, welding, cutting, grinding, burning and heating.

.2 Before the beginning of work, the Contractor must have received the “Hot Work Permit” of PWGSC (ELF 367) completed by the Departmental Representative when the duties to be undertaken involve hot work. The Contractor must also complete BGIS’s “Permit to work” (Annex A) in order to inform security of all work.

.3 A working portable fire extinguisher suitable to the fire risk shall be available and easily accessible within a 5 m radius from any flame, spark source or intense heat.

.4 The Contractor shall be appointed to do continuous monitoring of the fire risks for a period of one hour after the end of the shift. This individual shall countersign the permit and give it to the person in charge of the work site (or the individual he/she appoints) after the one hour period.

.5 The storage of propane cylinders shall comply with the CAN/CSA-B149.2-F00 Propane Storage and Handling Code and meet the specific conditions outlined in this document. The cylinders shall be stored outdoors, in a safe place, away from any unauthorized handling, in a storage cabinet specially designed for this purpose. The cylinders shall be securely kept upright and locked at all times in a place where no vehicles are allowed, unless the cylinders are protected by bars or the equivalent.

.6 All of the cylinders used or stored on the work site shall be equipped with a collar designed to protect the valve.

.7 Filling the cylinders on the work site is forbidden, unless a procedure compliant with the CAN/CSA B149.2 standard is approved and authorized by the Engineer.

.8 Welding and cutting: For welding and cutting activities, the Contractor must assure that the following conditions are met moreover that the ones mentioned above.

.1 The works must be carried out in accordance with the sections “3.13 Compressed gas supply” and “3.14 Welding and cutting” of the Safety Code for the construction industry, S-2.1, r. 6.

.2 The welding and cutting devices are excessively dangerous with regard to the fire risk on the building work place. The following precautions must be taken at the time of this type of work:

.1 Store all compressed gas cylinder on a fireproof fabrics and make sure that the room is well ventilated.

.2 Store all oxygen cylinders more than 6 metres from a flammable gas cylinder (ex: acetylene) or a combustible such as oil or grease, unless the oxygen cylinder is separated from it by a wall made of non-combustible material as mentioned in the article 3.13.4 of the Safety Code for the construction industry, S-2.1, r. 6.

.3 Set up fireproof fabrics when work of welding is done in superposition and that there is risk of spark fall.

.4 Store the bottles far from all heat sources.

.5 Not to store the bottles close to the staircases, exits, corridors and elevators.

.6 Not to put acetylene in contact with metals with metals such as silver, mercury, copper and alloys of brass having more than copper 65%, to avoid the risk of an explosive reaction.

.7 Check that welding equipment with electric arc has the necessary tension and are grounded.

.8 Ensure that the conducting wire of the electric welding equipment is not damaged.

.9 Place the welding equipment on a flat ground away from the bad weather.

.10 Move away or protect the combustible materials which can be near the welding equipment.

.11 Prohibition to weld or cut any closed container.

.12 Envisage protection measures when welding or cutting is carried out near drains, tanks or other containers containing inflammable materials.

.13 Do not perform any cutting, welding or work with naked flame on a container, a tank, a pipe or other container containing a flammable or explosive substance unless:

.1 Air Samples indicating that work can be made without danger has been taken; or

.2 Provisions to ensure the safety of the workers has been done.

1.16 LOCKOUT

.1 For every work on energized equipment or equipment that may be started accidentally, the Contractor shall draw up and implement a lockout procedure and complete the Request for Electrical Isolation Form provided by the Departmental Representative, although the hereunder list is not exhaustive, here are some examples for which the use of the form is obligatory:

- .1 Main building power feeders
- .2 Feeder supply panels and sub-panels
- .3 Bus ducts
- .4 Motor control centres
- .5 Emergency power circuits
- .6 Fire alarm and fire protection equipment
- .7 Mechanical protective equipment
- .8 Alarm circuit for building services, including all heating, ventilating and air conditioning equipment
- .9 Circuits supplying more than one (1) piece of equipment
- .10 Circuits affecting one (1) single piece of equipment used in a cooling or heating system.

.2 Notwithstanding the previous paragraphs, the Contractor shall, in emergency situation, receive an oral guarantee of isolation of the Manager in Charge of Worksite and immediately countersign the request of electrical isolation.

.3 The procedure requested at paragraph 1 must comply with the principles listed in the "*Le cadenassage*" pamphlet published by the *Association paritaire pour la santé et la sécurité du travail secteur construction (ASP Construction).*

.4 Supervisors and all workers concerned must have followed ASP Construction's "*Les techniques de cadenassage"* course (514 355-6190 or 1 800 361-2061) or an equivalent course given by another firm.

.5 Identify every work that must absolutely be done on live equipment and establish the safety measures that will be applied, including the personal protective equipment and complete a work permit for live equipment.

1.17 SPECIFIC CONDITIONS FOR CONFINED SPACES

.1 Not Used.

1.18 SILICA

.1 Preventive measures to apply to the work site

- .1 Source reduction methods
  - .1 Work in wet environment or use tools with inflow of water in order to reduce dustiness, if not, collect dust at the source and retain it with a high efficiency filter not to propagate dust in the environment.
  - .2 Clean surfaces and tools with water, never with compressed air.
  - .3 Sand and pickle surfaces by using an abrasive containing less than 1 % of silica (also called amorphous silica).
  - .4 When required, install shields or other containment device to prevent silica dust from migrating toward other workers or the public.
- .2 Individual protection equipment
  - .1 Wear individual respiratory protection equipment (mask) during all the operations that could generate silica dust. Select respiratory protection in accordance with the « *Guide des appareils de protection respiratoire utilisés au Québec* » http://www.prot.resp.csst.qc.ca/Guid_APR.pdf

.2 Wear an ocular protection (glasses or visors).
.3 Wear a coveralls to prevent contamination outside the worksite.

.3 Personal hygiene
.1 Do not eat, drink, or smoke in a dusty environment.
.2 Wash the hands and the face before drinking, eating or smoking.

1.19 SPECIAL REQUIREMENTS – SCAFFOLDING

.1 Foundation:
.1 Scaffolding shall be installed on a solid foundation so that it does not slip or rock.
.2 Contractors wishing to install scaffolding on a roof, overhang, canopy or awning shall submit their calculations and loads to the Departmental Representative and shall obtain permission from the Departmental Representative before beginning installation.

.2 Assembly, bracing and mooring:
.1 All scaffolding shall be assembled, braced and moored in accordance with the manufacturer's instructions and the provisions of the *Safety Code for the construction industry*.
.2 Where a situation requires the removal of part of the scaffolding (e.g., crosspieces), the Contractor shall submit an assembly procedure signed and sealed by an engineer member of OIQ certifying that the scaffolding assembled in that manner will allow the work to be done safely given the loads to which it will be subject.
.3 For scaffolding where the span between two supports is greater than 3 m, the Contractor shall provide an assembly plan signed and sealed by an engineer member of OIQ.

.3 Protection against falls during assembly:
.1 Workers working above the ground shall be protected against falls at all times during assembly.
.2 Before the work begins, the Contractor shall submit to the Departmental Representative a procedure stating the protective measures used and, if applicable, identifying the anchor points for the safety cables or moorings. This procedure shall be in accordance with sections 3.9.4.5, 2.9.1 and 2.10.12 of the *Safety Code for the construction industry* (amended on August 2, 2001).

.4 Platforms:
.1 Scaffolding platforms shall be designed and installed in accordance with the provisions of the *Safety Code for the construction industry.*
.2 If planks are used, they shall be approved and stamped in accordance with section 3.9.8 of the *Safety Code for the construction industry (*in force January 1, 2002).
.3 The platforms shall cover the entire surface protected by the guardrails.
.4 The above notwithstanding, scaffolding 4 sections (or 6 metres) high or higher shall have a full platform covering the entire surface of the putlogs every 3 m or fraction thereof, and the components of that platform shall not be moved at any time to create an intermediate landing.

.5 Guardrails:
.1 A guardrail shall be installed on every landing.
.2 Cross braces shall not be considered guardrails.
.3 Where scaffolding 4 sections (or 6 metres) high or higher requiring full platforms is used, guardrails shall be installed on each landing at the start of work and shall remain in place until the work is completed.

.6 Access:
.1 The Contractor shall ensure that access to the scaffolding does not compromise worker safety.
.2 Where the platforms of the scaffolding are comprised of planks, ladders shall be installed in such a way that planks extending beyond the platform do not block the way up or down.

.3 Notwithstanding the provisions of the Safety Code for the construction industry, stairs shall be installed on all scaffolding that has 6 or more rows of uprights or is 6 sections (or 9 metres) high or higher.

.7 Protection of the public and occupants:
.1 The Contractor shall identify the boundaries of and barricade the work area so as to limit access to authorized workers only.
.2 The Contractor shall install covered walkways, nets or other similar devices to protect the public or the occupants against falling objects.

.8 Use of public thoroughfares:
.1 Where it is necessary to encroach on a public thoroughfare, the Contractor shall obtain at the Contractor's expense any authorizations and permits required by the competent authority.
.2 The Contractor shall install at the Contractor's expense any signage, barricades or other devices needed to ensure the safety and security of the public and the Contractor's own facilities.

1.20 WORK IN HEIGHT

.1 The Contractor must ensure that any person carrying out work that poses a risk of falling more than 2,4 m use fall protection equipment.

.2 Plan and organize work so as to eliminate the danger at source or ensure collective protection, thereby minimizing the use of personal protective equipment. When personal fall protection is required, workers must use a safety harness that complies with CSA standard CAN/CSA Z-259.10 M90. A safety belt must not be used as fall protection.

.3 Every person using an elevating platform must have a training regarding this equipment.

.4 Wearing of safety harness is obligatory in any elevating platform with telescopic , articulated or rotary boom.

.5 Delimit a danger zone in any place where equipment for work in height is used.

.6 Everyone who works within 3 meters from the edge of a roof must use a safety harness in accordance with the regulation, unless there is presence of a guardrail on the perimeter of the roof which is between 900 mm to 1100 mm high.

1.21 LIFTING MATERIAL

.1 Lifting devices shall be positioned in such a way that loads are not carried over workers, occupants or the public.

.2 The Contractor must transmit to Departmental Representative a work procedure, signed and sealed by an engineer, including inter alia the position of the crane, a sketch of the trajectory of the transported loads, the length of the mast and a plan of lifting for the handling of loads above occupied buildings. The Departmental Representative can, if judge necessary, impose work of evening and weekend.

.3 All mobile cranes manufactured after January 1st 1980 must be equipped with a safety device against overload.

.4 All mobile cranes with cables manufactured after January 1st 1970, except if they are used for other end than lifting loads, must be provided with a safety device against two-blocking. Regarding mobile

cranes with cables manufactured before January 1st 1970, they will have to be equipped with the device at the latest on December 31, 2006.

.5 The Contractor shall provide the Departmental Representative with a mechanical service inspection certificate for each lifting device. Inspections must be carried out just prior to the delivery of the equipment to the work site.

.6 For all winch installations, the Contractor shall provide the Departmental Representative with the installation method recommended by the manufacturer. If unavailable, the Contractor shall then provide an installation procedure signed and sealed by an engineer. The installation procedure must take into account load bearing capacity, the amount, weight and location of counterweight and any other detail that may affect the capacity and stability of the device.

.7 In addition to the mechanical service inspection certificate, the annual inspection certificate and the crane logbook must be aboard all crane and crane-truck cabs.

.8 The entire lifting area shall be closed off to prevent non-authorized people from entering it.

.9 The Contractor shall obtain all of the permits at his own expense, in the event the thoroughfare must be temporarily closed off to meet the requirement stipulated in the preceding paragraph or for any other reason pertaining to the safety of workers, occupants or the public.

.10 The Contractor shall carefully inspect all of the slings and lifting accessories and make sure that those in poor condition are destroyed or scrapped.

.11 Compressed-gas cylinders shall be lifted with a basket specially designed for this purpose.

END OF SECTION

PART 1 – GENERAL

1.1 RELATED REQUIREMENTS

.1 Building Orientation Guide (Annex A).

1.2 REFERENCES AND CODES

.1 Perform Work in accordance with National Building Code of Canada (NBC) including amendments up to tender closing date and other codes of provincial or local application provided that in case of conflict or discrepancy, more stringent requirements apply.

.2 Meet or exceed requirements of:
- .1 Contract documents.
- .2 Specified standards, codes and referenced documents.

1.3 HAZARDOUS MATERIAL DISCOVERY

.1 According the analyses conducted in 2015 by the Departmental Representative, no hazardous material were found in the work area. The report is available upon request.

.2 PCB: Polychlorinated Biphenyl: stop work immediately when material resembling Polychlorinated Biphenyl is encountered during demolition work. Notify Departmental Representative if any materials containing this material are discovered during the work. Stop any work until the situation is taken care of.

.3 Mold: stop work immediately when material resembling mold is encountered during demolition work. Notify Departmental Representative.

1.4 BUILDING SMOKING ENVIRONMENT

.1 Comply with smoking restrictions and municipal by-laws.

1.5 NATIONAL PARKS ACT

.1 Perform Work in accordance with National Parks Act when projects are located within boundaries of National Park.

PART 2 – PRODUCTS

2.1 NOT USED

.1 Not Used.

PART 3 – EXECUTION

3.1 NOT USED

.1 Not Used.

END OF SECTION

PART 1 – GENERAL

1.1 RELATED REQUIREMENTS

.1 Not Used.

1.2 INSPECTION

.1 Allow Departmental Representative access to Work. If part of Work is in preparation at locations other than Place of Work, allow access to such Work whenever it is in progress.

.2 Give timely notice requesting inspection if Work is designated for special tests, inspections or approvals by Departmental Representative instructions, or law of Place of Work.

.3 If Contractor covers or permits to be covered Work that has been designated for special tests, inspections or approvals before such is made, uncover such Work, have inspections or tests satisfactorily completed and make good such Work.

.4 Departmental Representative will order part of Work to be examined if Work is suspected to be not in accordance with Contract Documents. If, upon examination such work is found not in accordance with Contract Documents, correct such Work and pay cost of examination and correction. If such Work is found in accordance with Contract Documents, Departmental Representative shall pay cost of examination and replacement.

1.3 INDEPENDENT INSPECTION AGENCIES

.1 Independent Inspection/Testing Agencies will be engaged by Departmental Representative for purpose of inspecting and/or testing portions of Work. Cost of such services will be borne by Departmental Representative.

.2 Provide equipment required for executing inspection and testing by appointed agencies.

.3 Employment of inspection/testing agencies does not relax responsibility to perform Work in accordance with Contract Documents.

.4 If defects are revealed during inspection and/or testing, appointed agency will request additional inspection and/or testing to ascertain full degree of defect. Correct defect and irregularities as advised by Departmental Representative at no cost to Departmental Representative. Pay costs for retesting and reinspection.

1.4 ACCESS TO WORK

.1 Allow inspection/testing agencies access to Work, off site manufacturing and fabrication plants.

.2 Co-operate to provide reasonable facilities for such access.

1.5 PROCEDURES

.1 Notify appropriate agency and Departmental Representative in advance of requirement for tests, in order that attendance arrangements can be made.

.2 Submit samples and/or materials required for testing, as specifically requested in specifications. Submit with reasonable promptness and in orderly sequence to not cause delays in Work.

.3 Provide labour and facilities to obtain and handle samples and materials on site. Provide sufficient space to store and cure test samples.

1.6 REJECTED WORK

.1 Remove defective Work, whether result of poor workmanship, use of defective products or damage and whether incorporated in Work or not, which has been rejected by Departmental Representative as failing to conform to Contract Documents. Replace or re-execute in accordance with Contract Documents.

.2 Make good other Contractor's work damaged by such removals or replacements promptly.

.3 If in opinion of Departmental Representative it is not expedient to correct defective Work or Work not performed in accordance with Contract Documents, Owner will deduct from Contract Price difference in value between Work performed and that called for by Contract Documents, amount of which will be determined by Departmental Representative.

1.7 REPORTS

.1 Submit 4 copies of inspection and test reports to Departmental Representative.

.2 Provide copies to subcontractor of work being manufacturer or fabricator of material being inspected or tested.

1.8 TESTS AND MIX DESIGNS

.1 Furnish test results and mix designs as requested.

.2 Cost of tests and mix designs beyond those called for in Contract Documents or beyond those required by law of Place of Work will be appraised by Departmental Representative and may be authorized as recoverable.

1.9 MOCK-UPS

.1 Prepare mock-ups for Work specifically requested in specifications. Include for Work of Sections required to provide mock-ups.

.2 Construct in locations acceptable to Departmental Representative.

.3 Prepare mock-ups for Departmental Representative review with reasonable promptness and in orderly sequence, to not cause delays in Work.

.4 Failure to prepare mock-ups in ample time is not considered sufficient reason for extension of Contract Time and no claim for extension by reason of such default will be allowed.

.5 If requested, Departmental Representative will assist in preparing schedule fixing dates for preparation.

.6 Remove mock-up at conclusion of Work or when acceptable to Departmental Representative.

.7 Mock-ups may remain as part of Work.

.8 Specification section identifies whether mock-up may remain as part of Work or if it is to be removed and when.

1.10 MILL TESTS

.1 Submit mill test certificates as required of specification Sections.

1.11 EQUIPMENT AND SYSTEMS

.1 Submit adjustment and balancing reports for mechanical, electrical and building equipment systems.

.2 Refer to Section 01 91 13 – General Commissioning Requirements, 01 91 31 – Commissioning Plan and 23 05 93 – Testing, Adjusting and Balancing for HVAC for definitive requirements.

PART 2 – PRODUCTS

2.1 NOT USED

.1 Not Used.

PART 3 – EXECUTION

3.1 NOT USED

.1 Not Used.

END OF SECTION

PART 1 – GENERAL

1.1 RELATED REQUIREMENTS

.1 Not Used.

1.2 INSTALLATION AND REMOVAL

.1 Provide temporary controls and utilities in order to execute Work expeditiously.

.2 Remove from site all such work after use.

.3 Make good and functional all damaged installations caused by use under this Contract, and to the satisfaction of Departmental Representative.

1.3 TEMPORARY WATER

.1 The Departmental Representative will assume the costs associated to the necessary drinking water for the Work

1.3 TEMPORARY HEATING AND VENTILATION

.1 The Departmental Representative will assume the costs associated to the necessary ventilation and heating for the Work.

1.4 TEMPORARY POWER AND LIGHT

.1 The Departmental Representative will provide and pay for temporary power during construction for temporary lighting and operating of power tools up to a maximum of 120V, 15 A. The electrical supply available on site is 120/208v, 3phases, 4f, 30A.

.2 Arrange for connection with appropriate connection to the existing electrical services in accordance with the Canadian Electrical Code and provide for communication equipment. Assume cost for installation, maintenance and disconnection.

.3 Provide and maintain temporary lighting throughout project. Ensure level of illumination on all floors and stairs is not less than 162 lux.

.4 Electrical power and lighting systems installed under this Contract may be used for construction requirements only with prior approval of Departmental Representative provided that guarantees are not affected. Make good damage to electrical system caused by use under this Contract. Replace lamps which have been used for more than 3 months.

1.5 TEMPORARY COMMUNICATION FACILITIES

.1 Provide and pay for temporary telephone and data hook up, lines equipment necessary for own use and use of Departmental Representative.

1.6 FIRE PROTECTION

.1 Provide and maintain temporary fire protection equipment during performance of Work required by insurance companies having jurisdiction and governing codes, regulations and bylaws.

.2 Burning rubbish and construction waste materials is not permitted on site.

PART 2 – PRODUCTS

2.1 NOT USED

.1 Not Used.

PART 3 – EXECUTION

3.1 NOT USED

.1 Not used.

END OF SECTION

PART 1 – GENERAL

1.1 RELATED REQUIREMENTS

.1 Not Used.

1.2 REFERENCES

.1 Canadian General Standards Board (CGSB)
- .1 CAN/CGSB 1.189-00, Exterior Alkyd Primer for Wood.
- .2 CGSB 1.59-97, Alkyd Exterior Gloss Enamel.

.2 Canadian Standards Association (CSA International)
- .1 CSA-A23.1/A23.2-04, Concrete Materials and Methods of Concrete Construction/Methods of Test and Standard Practices for Concrete.
- .2 CSA-0121-M1978(R2003), Douglas Fir Plywood.
- .3 CAN/CSA-S269.2-M1987(R2003), Access Scaffolding for Construction Purposes.
- .4 CAN/CSA-Z321-96(R2001), Signs and Symbols for the Occupational Environment.

1.3 INSTALLATION AND REMOVAL

.1 Provide construction facilities in order to execute work expeditiously.

.2 Remove from site all such work after use.

1.4 SCAFFOLDING

.1 Scaffolding in accordance with CAN/CSA-S269.2.

.2 Provide and maintain scaffolding, ramps, ladders, swing staging, platforms and temporary stairs in order to execute work.

1.5 ELEVATORS AND LIFT

.1 Existing elevator # 3 and lift may be used each working day upon arrival and departure by Contractor's personnel, as well as for transporting equipment and material. Co-ordinate use with Departmental Representative and Guy-Favreau Complex management. The lift is not exclusively available for Contractor's use, building operations will have priority over Contractor's Work.

.2 Provide protective coverings for finish surfaces of elevator cars and entrances.

1.6 SITE STORAGE/LOADING

.1 Confine work and operations of employees by Contract Documents. Do not unreasonably encumber premises with products.

.2 Do not load or permit to load any part of Work with weight or force that will endanger Work.

1.7 CONSTRUCTION PARKING

.1 Parking will be permitted at the Guy-Favreau Complex, in the public parking areas identified by the establishment's management. Contractor shall pay cost.

1.8 SECURITY

.1 Provide and pay for responsible security personnel to guard site and contents of site after working hours and during holidays.

1.9 EQUIPMENT, TOOL AND MATERIALS STORAGE

.1 Provide and maintain, in clean and orderly condition, lockable weatherproof sheds for storage of tools, equipment and materials.

.2 Locate materials not required to be stored in weatherproof sheds on site in manner to cause least interference with work activities.

1.10 SANITARY FACILITIES

.1 Sanitary facilities for the Contractor's personnel will be available on the 6th floor West Tower and on level 00 of the GFC.

.2 Post notices and take precautions as required by local health authorities. Keep area and premises in sanitary condition.

1.11 CONSTRUCTION SIGNAGE

.1 No other signs or advertisements, other than warning signs, are permitted on site.

1.12 CLEAN-UP

.1 Remove construction debris, waste materials, packaging material from work site daily.

.2 Store materials resulting from demolition activities that are salvageable.

PART 2– PRODUCTS

2.1 NOT USED

.1 Not Used.

PART 3 – EXECUTION

3.1 TEMPORARY EROSION AND SEDIMENTATION CONTROL

.1 Not Used.

END OF SECTION

PART 1 – GENERAL

1.1 RELATED REQUIREMENTS

.1 Not Used.

1.2 REFERENCES

.1 Canadian Standards Association (CSA International)
.1 CSA-O121-M1978(R2003), Douglas Fir Plywood.

1.3 INSTALLATION AND REMOVAL

.1 Provide temporary controls in order to execute Work expeditiously.

.2 Remove from site all such work after use.

1.4 DUST TIGHT SCREENS

.1 Provide dust tight screens or partitions to localize dust generating activities, and for protection of workers, finished areas of Work and public.

.2 Maintain and relocate protection until such work is complete.

1.5 PROTECTION OF BUILDING FINISHES

.1 Provide plastic covers on existing 6th floor elevator doors for protection against dust. Covers are to remain for the duration of Work.

.2 Provide protection for finished and partially finished building finishes and equipment during performance of Work.

.3 Provide necessary screens, covers, and hoardings.

.4 Confirm with Departmental Representative locations and installation schedule 3 days prior to installation.

.5 Be responsible for damage incurred due to lack of or improper protection.

.6 Provide proper protection for all supply, return and exhaust ducts throughout the demolition and construction process from beginning to end of Work.

1.6 WASTE MANAGEMENT AND DISPOSAL

.1 Separate waste materials for reuse or recycling in accordance with Section 01 74 21 - Construction/Demolition Waste Management And Disposal.

PART 2 – PRODUCTS

2.1 NOT USED

.1 Not Used.

PART 3 – EXECUTION

3.1 NOT USED

.1 Not Used.

END OF SECTION

PART 1 – GENERAL

1.1 RELATED REQUIREMENTS

.1 Not Used.

1.2 REFERENCES

.1 Within text of each specifications section, reference may be made to reference standards.

.2 Conform to these reference standards, as specifically requested in specifications.

.3 If there is question as to whether products or systems are in conformance with applicable standards, Departmental Representative reserves right to have such products or systems tested to prove or disprove conformance.

.4 Cost for such testing will be borne by Departmental Representative in event of conformance with Contract Documents or by Contractor in event of non-conformance.

1.3 QUALITY

.1 Products, materials, equipment and articles incorporated in Work shall be new, not damaged or defective, and of best quality for purpose intended. If requested, furnish evidence as to type, source and quality of products provided.

.2 Procurement policy is to acquire, in cost effective manner, items containing highest percentage of recycled and recovered materials practicable consistent with maintaining satisfactory levels of competition. Make reasonable efforts to use recycled and recovered materials and in otherwise utilizing recycled and recovered materials in execution of work.

.3 Defective products, whenever identified prior to completion of Work, will be rejected, regardless of previous inspections. Inspection does not relieve responsibility, but is precaution against oversight or error. Remove and replace defective products at own expense and be responsible for delays and expenses caused by rejection.

.4 Should disputes arise as to quality or fitness of products, decision rests strictly with Departmental Representative based upon requirements of Contract Documents.

.5 Unless otherwise indicated in specifications, maintain uniformity of manufacture for any particular or like item throughout building.

.6 Permanent labels, trademarks and nameplates on products are not acceptable in prominent locations, except where required for operating instructions, or when located in mechanical or electrical rooms.

1.4 AVAILABILITY

.1 Immediately upon signing Contract, review product delivery requirements and anticipate foreseeable supply delays for items. If delays in supply of products are foreseeable, notify Departmental Representative of such, in order that substitutions or other remedial action may be authorized in ample time to prevent delay in performance of Work.

.2 In event of failure to notify Departmental Representative at commencement of Work and should it

subsequently appear that Work may be delayed for such reason, Departmental Representative reserves right to substitute more readily available products of similar character, at no increase in Contract Price or Contract Time.

1.5 STORAGE, HANDLING AND PROTECTION

.1 Handle and store products in manner to prevent damage, adulteration, deterioration and soiling and in accordance with manufacturer's instructions when applicable.

.2 Store packaged or bundled products in original and undamaged condition with manufacturer's seal and labels intact. Do not remove from packaging or bundling until required in Work.

.3 Store products subject to damage from weather in weatherproof enclosures.

.4 Store cementitious products clear of earth or concrete floors, and away from walls.

.5 Keep sand, when used for grout or mortar materials, clean and dry. Store sand on wooden platforms and cover with waterproof tarpaulins during inclement weather.

.6 Store sheet and panel materials and lumber on flat, solid supports and keep clear of ground. Slope to shed moisture.

.7 Store and mix paints in heated and ventilated room. Remove oily rags and other combustible debris from site daily. Take every precaution necessary to prevent spontaneous combustion.

.8 Remove and replace damaged products at own expense and to satisfaction of Departmental Representative.

.9 Touch-up damaged factory finished surfaces to Departmental Representative's satisfaction. Use touch-up materials to match original. Do not paint over name plates.

1.6 TRANSPORTATION

.1 Pay costs of transportation of products required in performance of Work.

.2 Transportation cost of products supplied by Owner will be paid for by Departmental Representative. Unload, handle and store such products.

1.7 MANUFACTURER'S INSTRUCTIONS

.1 Unless otherwise indicated in specifications, install or erect products in accordance with manufacturer's instructions. Do not rely on labels or enclosures provided with products. Obtain written instructions directly from manufacturers.

.2 Notify Departmental Representative in writing, of conflicts between specifications and manufacturer's instructions, so that he will establish course of action.

.3 Improper installation or erection of products, due to failure in complying with these requirements, authorizes Departmental Representative to require removal and re-installation at no increase in Contract Price or Contract Time.

1.8 QUALITY OF WORK

.1 Ensure Quality of Work is of highest standard, executed by workers experienced and skilled in respective duties for which they are employed. Immediately notify Departmental Representative if required Work is such as to make it impractical to produce required results.

.2 Do not employ anyone unskilled in their required duties. Departmental Representative reserves right to require dismissal from site, workers deemed incompetent or careless.

.3 Decisions as to standard or fitness of Quality of Work in cases of dispute rest solely with Departmental Representative, whose decision is final.

1.9 CO-ORDINATION

.1 Ensure co-operation of workers in laying out Work. Maintain efficient and continuous supervision.

.2 Be responsible for coordination and placement of openings, sleeves and accessories.

1.10 CONCEALMENT

.1 In finished areas conceal pipes, ducts and wiring in floors, walls and ceilings, except where indicated otherwise.

.2 Before installation inform Departmental Representative if there is interference. Install as directed by Departmental Representative.

1.11 REMEDIAL WORK

.1 Perform remedial work required to repair or replace parts or portions of Work identified as defective or unacceptable. Co-ordinate adjacent affected Work as required.

.2 Perform remedial work by specialists familiar with materials affected. Perform in a manner to neither damage nor put at risk any portion of Work.

1.12 LOCATION OF FIXTURES

.1 Consider location of fixtures, outlets, and mechanical and electrical items indicated as approximate.

.2 Inform Departmental Representative of conflicting installation. Install as directed.

1.13 FASTENINGS

.1 Provide metal fastenings and accessories in same texture, colour and finish as adjacent materials, unless indicated otherwise.

.2 Prevent electrolytic action between dissimilar metals and materials.

.3 Use non-corrosive hot dip galvanized steel fasteners and anchors for securing exterior work, unless stainless steel or other material is specifically requested in affected specification Section.

.4 Space anchors within individual load limit or shear capacity and ensure they provide positive permanent anchorage. Wood, or any other organic material plugs are not acceptable.

.5 Keep exposed fastenings to a minimum, space evenly and install neatly.

.6 Fastenings which cause spalling or cracking of material to which anchorage is made are not acceptable.

1.14 FASTENINGS - EQUIPMENT

.1 Use fastenings of standard commercial sizes and patterns with material and finish suitable for service.

.2 Use heavy hexagon heads, semi-finished unless otherwise specified. Use No. 304 stainless steel for exterior areas.

.3 Bolts may not project more than one diameter beyond nuts.

.4 Use plain type washers on equipment, sheet metal and soft gasket lock type washers where vibrations occur. Use resilient washers with stainless steel.

1.15 PROTECTION OF WORK IN PROGRESS

.1 Prevent overloading of parts of building. Do not cut, drill or sleeve load bearing structural member, unless specifically indicated without written approval of Departmental Representative.

1.16 EXISTING UTILITIES

.1 When breaking into or connecting to existing services or utilities, execute Work at times directed in Building Orientation Guide with minimum of disturbance to Work, and/or building occupants.

.2 Protect, relocate or maintain existing active services. When services are encountered, cap off in manner approved by authority having jurisdiction. Stake and record location of capped service.

PART 2 – PRODUCTS

2.1 NOT USED

.1 Not Used.

PART 3 – EXECUTION

3.1 NOT USED

.1 Not Used.

END OF SECTION

PART 1 – GENERAL

1.1 RELATED REQUIREMENTS

.1 Not Used.

1.2 EXISTING SERVICES

.1 Before commencing work, establish location and extent of service lines in area of Work and notify Departmental Representative of findings. The Contractor must coordinate an on-site visit during the day between 7h00 and 15h00, to verify services and equipment with building maintenance personnel at least 48 hours before the visit.

.2 Remove abandoned service lines within 2 m of structures. Cap or otherwise seal lines at cut-off points as directed by Departmental Representative.

1.3 LOCATION OF EQUIPMENT AND FIXTURES

.1 Location of equipment, fixtures and outlets indicated or specified are to be considered as approximate.

.2 Locate equipment, fixtures and distribution systems to provide minimum interference and maximum usable space and in accordance with manufacturer's recommendations for safety, access and maintenance.

.3 Inform Departmental Representative of impending installation and obtain approval for actual location.

PART 2– PRODUCTS

2.1 NOT USED

.1 Not Used.

PART 3 – EXECUTION

3.1 NOT USED

.1 Not Used.

END OF SECTION

PART 1 – GENERAL

1.1 RELATED REQUIREMENTS

.1 The pertinent specification technical sections, for all cutting and patching work in the present Contract. It is important to warn all separate contractors involved prior to commencement of such work.

1.2 ACTION AND INFORMATIONAL SUBMITTALS

.1 Submittals: in accordance with Section 01 33 00 - Submittal Procedures.

.2 Submit written request in advance of cutting or alteration which affects:
- .1 Structural integrity of elements of project.
- .2 Integrity of weather-exposed or moisture-resistant elements.
- .3 Efficiency, maintenance, or safety of operational elements.
- .4 Visual qualities of sight-exposed elements.
- .5 Work of Owner or separate contractor.

.3 Include in request:
- .1 Identification of project.
- .2 Location and description of affected Work.
- .3 Statement on necessity for cutting or alteration.
- .4 Description of proposed Work, and products to be used.
- .5 Alternatives to cutting and patching.
- .6 Effect on Work of Owner or separate contractor.
- .7 Written permission of affected separate contractor.
- .8 Date and time work will be executed.

1.3 MATERIALS

.1 Required for original installation.

.2 Change in Materials: Submit request for substitution in accordance with Section 01 33 00 - Submittal Procedures.

1.4 PREPARATION

.1 Inspect existing conditions, including elements subject to damage or movement during cutting and patching.

.2 After uncovering, inspect conditions affecting performance of Work.

.3 Beginning of cutting or patching means acceptance of existing conditions.

.4 Provide supports to assure structural integrity of surroundings; provide devices and methods to protect other portions of project from damage.

.5 Provide protection from elements for areas which are to be exposed by uncovering work; maintain excavations free of water.

1.5 EXECUTION

.1 Execute cutting, fitting, and patching to complete Work.

.2 Fit several parts together, to integrate with other Work.

.3 Uncover Work to install ill-timed Work.

.4 Remove and replace defective and non-conforming Work.

.5 Remove samples of installed Work for testing.

.6 Provide openings in non-structural elements of Work for penetrations of mechanical and electrical Work.

.7 Execute Work by methods to avoid damage to other Work, and which will provide proper surfaces to receive patching and finishing.

.8 Employ original installer to perform cutting and patching for weather-exposed and moisture-resistant elements, and sight-exposed surfaces.

.9 Cut rigid materials using masonry saw or core drill. Pneumatic or impact tools not allowed on masonry work without prior approval.

.10 Restore work with new products in accordance with requirements of Contract Documents.

.11 Fit Work airtight to pipes, sleeves, ducts, conduit, and other penetrations through surfaces.

.12 At penetration of fire rated wall, ceiling, or floor construction, completely seal voids with firestopping material in accordance with Section 07 84 00 – Firestopping, full thickness of the construction element.

.13 Refinish surfaces to match adjacent finishes: Refinish continuous surfaces to nearest intersection. Refinish assemblies by refinishing entire unit.

.14 Conceal pipes, ducts and wiring in floor, wall and ceiling construction of finished areas except where indicated otherwise.

1.6 WASTE MANAGEMENT AND DISPOSAL

.1 Separate waste materials for reuse or recycling in accordance with Section 01 74 21 - Construction/Demolition Waste Management and Disposal.

PART 2 – PRODUCTS

2.1 NOT USED

.1 Not Used.

PART 3 – EXECUTION

3.1 NOT USED

.1 Not Used.

END OF SECTION

PART 1 – GENERAL

1.1 RELATED REQUIREMENTS

.1 Not Used.

1.2 REFERENCES

.1 Workplace Hazardous Materials Information System (WHMIS)

.1 Material Safety Data Sheet (MSDF)

1.3 PROJECT CLEANLINESS

.1 Maintain Work in tidy condition, free from accumulation of waste products and debris, other than that caused by Owner or other Contractors.

.2 Remove waste materials from site at daily regularly scheduled times or dispose of as directed by Departmental Representative. Do not burn waste materials on site, unless approved by Departmental Representative.

.3 Make arrangements with and obtain permits from authorities having jurisdiction for disposal of waste and debris.

.4 Provide on-site containers for collection of waste materials and debris.

.5 Provide and use marked separate bins for recycling. Refer to Section 01 74 21 - Construction/Demolition Waste Management and Disposal.

.6 Dispose of waste materials and debris off site, and dispose of trash in trash containers at the end of each work period.

.7 Clean interior areas prior to start of finishing work, and maintain areas free of dust and other contaminants during finishing operations.

.8 Store volatile waste in covered metal containers, and remove from premises at end of each working day.

.9 Provide adequate ventilation during use of volatile or noxious substances. Use of building ventilation systems is not permitted for this purpose.

.10 Use only cleaning materials recommended by manufacturer of surface to be cleaned, and as recommended by cleaning material manufacturer.

.11 Schedule cleaning operations so that resulting dust, debris and other contaminants will not fall on wet, newly painted surfaces nor contaminate building systems.

1.4 FINAL CLEANING

.1 When Work is Substantially Performed remove surplus products, tools, construction machinery and equipment not required for performance of remaining Work.

.2 Remove waste products and debris other than that caused by others, and leave Work clean and suitable for occupancy.

.3 Prior to final review remove surplus products, tools, construction machinery and equipment.

.4 Remove waste products and debris other than that caused by Owner or other Contractors.

.5 Remove waste materials from site at regularly scheduled times or dispose of as directed by Departmental Representative. Do not burn waste materials on site, unless approved by Departmental Representative.

.6 Make arrangements with and obtain permits from authorities having jurisdiction for disposal of waste and debris.

.7 Clean and polish glass, mirrors, hardware, wall tile, stainless steel, chrome, porcelain enamel, baked enamel, plastic laminate, and mechanical and electrical fixtures. Replace broken, scratched or disfigured glass.

.8 Remove stains, spots, marks and dirt from decorative work, electrical and mechanical fixtures, furniture fitments, walls, and floors.

.9 Clean lighting reflectors, lenses, and other lighting surfaces.

.10 Vacuum clean and dust building interiors, behind grilles, louvres and screens.

.11 Wax, seal, shampoo or prepare floor finishes, as recommended by manufacturer.

.12 Inspect finishes, fitments and equipment and ensure specified workmanship and operation.

.13 Clean equipment and fixtures to sanitary condition; clean or replace filters of mechanical equipment.

1.5 WASTE MANAGEMENT AND DISPOSAL

.1 Separate waste materials for reuse or recycling] in accordance with Section 01 74 21 - Construction/Demolition Waste Management and Disposal.

PART 2 – PRODUCTS

2.1 NOT USED

.1 Not Used.

PART 3 – EXECUTION

3.1 NOT USED

.1 Not Used.

END OF SECTION

PART 1 – GENERAL

1.1 WASTE MANAGEMENT GOALS

.1 Prior to start of Work conduct meeting with Departmental Representative to review and discuss PWGSC's waste management goal.

.2 PWGSC's waste management goal: to divert a minimum 75 percent of total Project Waste from landfill sites. Prior to project completion provide Departmental Representative documentation certifying that waste management, recycling, reuse of recyclable and reusable materials have been extensively practiced.

.3 Minimize amount of solid waste generated by project.

.4 Protect environment and prevent environmental pollution damage.

1.2 RELATED REQUIREMENTS

.1 Not Used.

1.3 DEFINITIONS

.1 Class III: non-hazardous waste - construction renovation and demolition waste.

.2 Construction, Renovation and/or Demolition (CRD) Waste: Class III solid, non-hazardous waste materials generated during construction, demolition, and/or renovation activities

.3 Cost/Revenue Analysis Workplan (CRAW): based on information from Waste Reduction Workplan, and intended as financial tracking tool for determining economic status of waste management practices (Schedule E).

.4 Inert Fill: inert waste - exclusively asphalt and concrete.

.5 Waste Source Separation Program (WSSP): implementation and co-ordination of ongoing activities to ensure designated waste materials will be sorted into pre-defined categories and sent for recycling and reuse, maximizing diversion and potential to reduce disposal costs.

.6 Recyclable: ability of product or material to be recovered at end of its life cycle and re-manufactured into new product for reuse.

.7 Recycle: process by which waste and recyclable materials are transformed or collected for purpose of being transferred into new products.

.8 Recycling: process of sorting, cleansing, treating and reconstituting solid waste and other discarded materials for purpose of using in altered form. Recycling does not include burning, incinerating, or thermally destroying waste.

.9 Reuse: repeated use of product in same form but not necessarily for same purpose. Reuse includes:

.1 Salvaging reusable materials from re-modelling projects, before demolition stage, for resale, reuse on current project or for storage for use on future projects.

.2 Returning reusable items including pallets or unused products to vendors.

.3 Salvage: removal of structural and non-structural materials from deconstruction/disassembly projects for purpose of reuse or recycling.
.4 Separate Condition: refers to waste sorted into individual types.
.5 Source Separation: act of keeping different types of waste materials separate beginning from the point they became waste.
.6 Waste Audit (WA): detailed inventory of estimated quantities of waste materials that will be generated during construction, demolition, deconstruction and/or renovation. Involves quantifying by volume/weight amounts of materials and wastes that will be reused, recycled or landfilled. Refer to Schedule A.
.7 Waste Management Co-ordinator (WMC): contractor representative responsible for supervising waste management activities as well as co-ordinating required submittal and reporting requirements.
.8 Waste Reduction Workplan (WRW): written report which addresses opportunities for reduction, reuse, or recycling of materials generated by project. Specifies diversion goals, implementation and reporting procedures, anticipated results and responsibilities. Waste Reduction Workplan (Schedule B) information acquired from Waste Audit.

1.4 DOCUMENTS

.1 Post and maintain in visible and accessible area at job site, one copy of following documents:
.1 Waste Audit (Schedule A).
.2 Waste Reduction Workplan (Schedule B).
.3 Waste Source Separation Program.
.4 Annex A completed for project.

1.5 ACTION AND INFORMATIONAL SUBMITTALS

.1 Submit in accordance with Section 01 33 00 - Submittal Procedures.

.2 Prepare and submit following:
.1 1 copy of completed Waste Audit (WA): Schedule A.

.3 Submit prior to final payment the following:
.1 Waste Diversion Report, indicating final quantities by material types salvaged for reuse, recycling or disposal in landfill and recycling centers, re-use depots, landfills and other waste processors that received waste materials (See Schedule C). Final payment may be withheld if report is not submitted.

1.6 WASTE AUDIT (WA)

.1 Complete WA prior to project start-up.

.2 Prepare WA (Schedule A).

.3 WA provides detailed inventory, estimated quantities and types of waste materials that will be generated as well as their potential to be reused and/or recycled and project's waste diversion goals and objectives.

1.7 STORAGE, HANDLING AND PROTECTION

.1 Store, materials to be reused, recycled and salvaged in locations as directed by Departmental Representative.

.2 Unless specified otherwise, materials for removal do not become Contractor's property.

.3 Protect, stockpile, store and catalogue salvaged items.

.4 Separate non-salvageable materials from salvaged items. Transport and deliver non-salvageable items to licensed disposal facility.

.5 Protect structural components not removed and salvaged materials from movement or damage.

.6 Support affected structures. If safety of building is endangered, cease operations and immediately notify Departmental Representative.

.7 Protect surface drainage, mechanical and electrical from damage and blockage.

.8 Provide on-site facilities and containers for collection and storage of reusable and recyclable materials.

.9 Separate and store materials produced during project in designated areas.

.10 Prevent contamination of materials to be salvaged and recycled and handle materials in accordance with requirements for acceptance by designated processing facilities.
- .1 On-site source separation is recommended.
- .2 Remove co-mingled materials to off-site processing facility for separation.
- .3 Obtain waybills, receipts and/or scale tickets for separated materials removed from site.
- .4 Materials reused on-site are considered to be diverted from landfill and as such are to be included in all reporting.

1.8 DISPOSAL OF WASTES

.1 Do not bury rubbish or waste materials.

.2 Do not dispose of waste into waterways, storm, or sanitary sewers.

.3 Keep records of construction waste including:
- .1 Number and size of bins.
- .2 Waste type of each bin.
- .3 Total tonnage generated.
- .4 Tonnage reused or recycled.
- .5 Reused or recycled waste destination.

.4 Remove materials on-site as Work progresses.

.5 Prepare project summary to verify destination and quantities on a material-by-material basis as identified in the waste audit.

1.9 SCHEDULING

.1 Co-ordinate Work with other activities at site to ensure timely and orderly progress of Work.

PART 2 – PRODUCTS

2.1 NOT USED

.1 Not Used.

PART 3 – EXECUTION

3.1 APPLICATION

.1 Do Work in compliance with WRW and WSSP.

.2 Handle waste materials not reused, salvaged, or recycled in accordance with appropriate regulations and codes.

3.2 CLEANING

.1 Progress Cleaning: clean in accordance with Section 01 74 11 – Cleaning.
  .1 Leave Work area clean at end of each day.

.2 Final Cleaning: upon completion remove surplus materials, rubbish, tools and equipment in accordance with Section 01 74 11 - Cleaning.

.3 Waste Management: separate waste materials for reuse or recycling in accordance with Section 01 74 21 - Construction/Demolition Waste Management and Disposal.
  .1 Remove recycling containers and bins from site and dispose of materials at appropriate facility.
  .2 Source separate materials to be reused/recycled into specified sort areas.

3.3 DIVERSION OF MATERIALS

.1 From following list, separate materials from general waste stream and stockpile in separate piles or containers, as reviewed by Departmental Representative, and consistent with applicable fire regulations.
  .1 Mark containers or stockpile areas.
  .2 Provide instruction on disposal practices.

3.4 WASTE DIVERSION REPORT

.1 At completion of Project, prepare written Waste Diversion Report indicating quantities of materials reused, recycled or disposed of as well as the following:
  .1 Identify final diversion results and measure success against goals from Waste Reduction Workplan.
  .2 Compare final quantities/percentages diverted with initial projections in Waste Audit and Waste Reduction Workplan and explain variances.
    .1 Supporting documentation.
    .2 Waybills and tracking forms.
    .3 Description of issues, resolutions and lessons learned.

.2 Demolition waste

Type of waste material	Recommended percentage of value	Real percentage of value
Acoustical ceiling tiles	50	[_____]
Acoustical materials	100	[_____]
Tile carpenting	100	[_____]
Movable partitions	80	[_____]
Doors and frames	100	[_____]
Electrical material	80	[_____]

Furniture	80	[_____]
Marble slab	100	[_____]
Mechanical material	100	[_____]
Metallic element	100	[_____]
Rubble	100	[_____]
Wood elements (non contaminated)	100	[_____]
Others		[_____]

.3 Construction waste

Type of waste material	Pourcentage recommandé de valorisation	Pourcentage réel de valorisation
Cartboard	100	[_____]
Plastic wrapping	100	[_____]
Rubble	100	[_____]
Steel elements	80	[_____]
Wood elements (non contaminated)	100	[_____]
Others		[_____]

3.5 WASTE AUDIT (WA)

.1 Schedule A - Waste Audit (WA)

(1) Material category	(2) Material quantity unit	(3) Estimated waste %	(4) Total quantity of waste (unit)	(5) Generation point	(6) % recycled	(7) % reused
Wood and plastics - Material description						
Off-cuts						
Warped pallet forms						
Plastic packaging						
Cardboard packaging						
Other						
Doors and windows – Material description						
Painted frames						
Glass						
Wood						
Metal						

Other						

3.6 WASTE REDUCTION WORKPLAN (WRW)

.1 Schedule B

(1) Material category	(2) Person (s) responsible	(3) Total quantity of waste (unit)	(4) Reused amount (units) projected	(5) Recycled amount (unit) projected	(6) Material (s) destination
Wood and plastics - Material description					
Off-cuts					
Warped pallet forms					
Plastic packaging					
Cardboard packaging					
Other					
Doors and windows – Material description					
Painted frames					
Glass					
Wood					
Metal					
Other					

3.7 COST/REVENUE ANALYSIS WORKPLAN (CRAW)

.1 Schedule E - Cost/Revenue Analysis Workplan (CRAW)

(1) Material description	(2) Total quantity (unit)	(3) Volume (cum)	(4) Weight (cum)	(5) Disposal cost/credit $ (+/-)	(6) Category sub-total $ (+/-)	(7) Cost (-) / Revenue (+)
Wood						
Wood stud plywood						
Baseboard – Wood						
Door trim - Wood						
Cabinet					$	

Doors and windows						
Panel regular						
Slab regular						
Wood laminate						
Byfold - Closet						
Glazing					$	

3.8 CANADIAN GOVERNMENTAL DEPARTMENTS CHIEF RESPONSIBILITY FOR THE ENVIRONMENT

.1 Schedule G - Government Chief Responsibility for the Environment:

Québec	Ministère de l'Environnement et de la Faune, Siège social 150, boul. René-Lévesque Est, Québec QC G1R 4Y1	418-643-3127 800-561-1616	418-646-5974

END OF SECTION

PART 1 – GENERAL

1.1 RELATED REQUIREMENTS

.1 Not Used

1.2 ADMINISTRATIVE REQUIREMENTS

.1 Acceptance of Work Procedures:
- .1 Contractor's Inspection: Contractor: conduct inspection of Work, identify deficiencies and defects, and repair as required to conform to Contract Documents.
  - .1 Notify Departmental Representative in writing of satisfactory completion of Contractor's inspection and submit verification that corrections have been made.
  - .2 Request Departmental Representative inspection.
- .2 Departmental Representative Inspection:
  - .1 Departmental Representative and Contractor to inspect Work and identify defects and deficiencies.
  - .2 Contractor to correct Work as directed.
- .3 Completion Tasks: submit written certificates in English that tasks have been performed as follows:
  - .1 Work: completed and inspected for compliance with Contract Documents.
  - .2 Defects: corrected and deficiencies completed.
  - .3 Equipment and systems: tested, adjusted and balanced, and fully operational.
  - .4 Certificates required by Utility companies: submitted.
  - .5 Operation of systems: demonstrated to Owner's personnel.
  - .6 Commissioning of mechanical systems: completed in accordance with 01 91 13 - General Commissioning Requirements and one final Commissioning Report submitted to Departmental Representative.
  - .7 Work: complete and ready for final inspection.
- .4 Final Inspection:
  - .1 When completion tasks are done, request final inspection of Work by Departmental Representative, and Contractor.
  - .2 When Work incomplete according to Departmental Representative, complete outstanding items and request re-inspection.
- .5 Declaration of Substantial Performance: when Departmental Representative considers deficiencies and defects corrected and requirements of Contract substantially performed, make application for Certificate of Substantial Performance.
- .6 Commencement of Lien and Warranty Periods: date of Owner's acceptance of submitted declaration of Substantial Performance to be date for commencement for warranty period and commencement of lien period unless required otherwise by lien statute of Place of Work.
- .7 Final Payment:
  - .1 When Departmental Representative considers final deficiencies and defects corrected and requirements of Contract met, make application for final payment.
- .8 Payment of Holdback: after issuance of Certificate of Substantial Performance of Work, submit application for payment of holdback amount in accordance with contractual agreement.

1.3 FINAL CLEANING

.1 Clean in accordance with Section 01 74 11 - Cleaning.
- .1 Remove surplus materials, excess materials, rubbish, tools and equipment.

.2 Waste Management: separate waste materials for reuse or recycling in accordance with Section 01 74 21 - Construction/Demolition Waste Management and Disposal.

PART 2 – PRODUCTS

2.1 NOT USED

.1 Not Used.

PART 3 – EXECUTION

3.1 NOT USED

.1 Not Used.

END OF SECTION

PART 1 – GENERAL

1.1 RELATED REQUIREMENTS

.1 Not Used.

1.2 ADMINISTRATIVE REQUIREMENTS

.1 Pre-warranty Meeting:
- .1 Convene meeting two weeks prior to contract completion with contractor's representative and Departmental Representative, in accordance with Section 01 31 19 - Project Meetings to:
  - .1 Verify Project requirements.
  - .2 Review manufacturer's installation instructions and warranty requirements.
- .2 Departmental Representative to establish communication procedures for:
  - .1 Notifying construction warranty defects.
  - .2 Determine priorities for type of defects.
  - .3 Determine reasonable response time.
- .3 Contact information for bonded and licensed company for warranty work action: provide name, telephone number and address of company authorized for construction warranty work action.
- .4 Ensure contact is located within local service area of warranted construction, is continuously available, and is responsive to inquiries for warranty work action.

1.3 ACTION AND INFORMATIONAL SUBMITTALS

.1 Provide submittals in accordance with Section 01 33 00 - Submittal Procedures.

.2 Two weeks prior to Substantial Performance of the Work, submit to the Departmental Representative, four final copies of operating and maintenance manuals in English.

.3 Provide spare parts, maintenance materials and special tools of same quality and manufacture as products provided in Work.

.4 Provide evidence, if requested, for type, source and quality of products supplied.

.5 Damaged material will be rejected, even if they had already been inspected, and they should be replaced without additional cost.

.6 Assume transport cost of these materials.

1.4 FORMAT

.1 Organize data as instructional manual.

.2 Binders: vinyl, hard covered, 3 'D' ring, loose leaf 219 x 279 mm with spine and face pockets.

.3 When multiple binders are used correlate data into related consistent groupings.
- .1 Identify contents of each binder on spine.

.4 Cover: identify each binder with type or printed title 'Project Record Documents'; list title of project and identify subject matter of contents.

.5 Arrange content by systems, under Section numbers and sequence of Table of Contents.

.6 Provide tabbed fly leaf for each separate product and system, with typed description of product and major component parts of equipment.

.7 Text: manufacturer's printed data, or typewritten data.

.8 Drawings: provide with reinforced punched binder tab.
- .1 Bind in with text; fold larger drawings to size of text pages.

.9 Provide 1:1 scaled CAD files in dwg format on CD.

.10 Provide a copy of End of Work manuals in electronic format.

1.5 CONTENTS - PROJECT RECORD DOCUMENTS

.1 Table of Contents for Each Volume: provide title of project;
- .1 Date of submission; names.
- .2 Addresses, and telephone numbers of Consultant and Contractor with name of responsible parties.
- .3 Schedule of products and systems, indexed to content of volume.

.2 For each product or system:
- .1 List names, addresses and telephone numbers of subcontractors and suppliers, including local source of supplies and replacement parts.

.3 Product Data: mark each sheet to identify specific products and component parts, and data applicable to installation; delete inapplicable information.

.4 Drawings: supplement product data to illustrate relations of component parts of equipment and systems, to show control and flow diagrams.

.5 Typewritten Text: as required to supplement product data.
- .1 Provide logical sequence of instructions for each procedure, incorporating manufacturer's instructions specified in Section 01 45 00 - Quality Control.

.6 Training: refer to Section 01 79 00 - Demonstration and Training.

1.6 AS -BUILT DOCUMENTS AND SAMPLES

.1 Maintain at site for Departmental Representative, one record copy of:
- .1 Contract Drawings.
- .2 Specifications.
- .3 Addenda.
- .4 Change Orders and other modifications to Contract.
- .5 Reviewed shop drawings, product data, and samples.
- .6 Field test records.
- .7 Inspection certificates.
- .8 Manufacturer's certificates.
- .9 Site Directives.
- .10 Minutes of meetings
- .11 SST file.

.2 Store record documents and samples in field office apart from documents used for construction.
- .1 Provide files, racks, and secure storage.

.3 Label record documents and file in accordance with Section number listings in List of Contents of this Project Manual.
.1 Label each document "PROJECT RECORD" in neat, large, printed letters.

.4 Maintain record documents in clean, dry and legible condition.
.1 Do not use record documents for construction purposes.

.5 Keep record documents and samples available for inspection by Departmental Representative.

1.7 RECORDING INFORMATION ON PROJECT RECORD DOCUMENTS

.1 Record information on set of black line opaque drawings, and in copy of Project Manual, provided by Departmental Representative.

.2 Use felt tip marking pens, maintaining separate colours for each major system, for recording information.

.3 Record information concurrently with construction progress.
.1 Do not conceal Work until required information is recorded.

.4 Contract Drawings and shop drawings: mark each item to record actual construction, including:
.1 Measured depths of elements of foundation in relation to finish first floor datum.
.2 Measured horizontal and vertical locations of underground utilities and appurtenances, referenced to permanent surface improvements.
.3 Measured locations of internal utilities and appurtenances, referenced to visible and accessible features of construction.
.4 Field changes of dimension and detail.
.5 Changes made by change orders.
.6 Details not on original Contract Drawings.
.7 References to related shop drawings and modifications.

.5 Specifications: mark each item to record actual construction, including:
.1 Manufacturer, trade name, and catalogue number of each product actually installed, particularly optional items and substitute items.
.2 Changes made by Addenda and change orders.

.6 Other Documents: maintain manufacturer's certifications, inspection certifications, field test records, required by individual specifications sections.

.7 Provide digital photos, if requested, for site records.

1.8 FINAL SURVEY

.1 Submit final site survey certificate in accordance with Section 01 71 00 - Examination and Preparation, certifying that elevations and locations of completed Work are in conformance, or non-conformance with Contract Documents.

1.9 EQUIPMENT AND SYSTEMS

.1 For each item of equipment and each system include description of unit or system, and component parts.
.1 Give function, normal operation characteristics and limiting conditions.
.2 Include performance curves, with engineering data and tests, and complete

nomenclature and commercial number of replaceable parts.

.2 Panel board circuit directories: provide electrical service characteristics, controls, and communications.

.3 Include installed colour coded wiring diagrams.

.4 Operating Procedures: include start-up, break-in, and routine normal operating instructions and sequences.
.1 Include regulation, control, stopping, shut-down, and emergency instructions.
.2 Include summer, winter, and any special operating instructions.

.5 Maintenance Requirements: include routine procedures and guide for trouble-shooting; disassembly, repair, and reassembly instructions; and alignment, adjusting, balancing, and checking instructions.

.6 Provide servicing and lubrication schedule, and list of lubricants required.

.7 Include manufacturer's printed operation and maintenance instructions.

.8 Include sequence of operation by controls manufacturer.

.9 Provide original manufacturer's parts list, illustrations, assembly drawings, and diagrams required for maintenance.

.10 Provide installed control diagrams by controls manufacturer.

.11 Provide Contractor's co-ordination drawings, with installed colour coded piping diagrams.

.12 Provide charts of valve tag numbers, with location and function of each valve, keyed to flow and control diagrams.

.13 Provide list of original manufacturer's spare parts, current prices, and recommended quantities to be maintained in storage.

.14 Include test and balancing reports as specified in Section 01 45 00 - Quality Control and 01 91 13 - General Commissioning Requirements.

.15 Additional requirements: as specified in individual specification sections.

1.10 MATERIALS AND FINISHES

.1 Building products, applied materials, and finishes: include product data, with catalogue number, size, composition, and colour and texture designations.
.1 Provide information for re-ordering custom manufactured products.

.2 Instructions for cleaning agents and methods, precautions against detrimental agents and methods, and recommended schedule for cleaning and maintenance.

.3 Moisture-protection and weather-exposed products: include manufacturer's recommendations for cleaning agents and methods, precautions against detrimental agents and methods, and recommended schedule for cleaning and maintenance.

.4 Additional requirements: as specified in individual specifications sections.

1.11 MAINTENANCE MATERIALS

.1 Spare Parts:
- .1 Provide spare parts, in quantities specified in individual specification sections.
- .2 Provide items of same manufacture and quality as items in Work.
- .3 Deliver to location as directed; place and store.
- .4 Receive and catalogue items.
  - .1 Submit inventory listing to Departmental Representative.
  - .2 Include approved listings in Maintenance Manual.
- .5 Obtain receipt for delivered products and submit prior to final payment.

.2 Extra Stock Materials:
- .1 Provide maintenance and extra materials, in quantities specified in individual specification sections.
- .2 Provide items of same manufacture and quality as items in Work.
- .3 Deliver to location as directed by Departmental Representative; place and store.
- .4 Receive and catalogue items.
  - .1 Submit inventory listing to Departmental Representative.
  - .2 Include approved listings in Maintenance Manual.
- .5 Obtain receipt for delivered products and submit prior to final payment.

.3 Special Tools:
- .1 Provide special tools, in quantities specified in individual specification section.
- .2 Provide items with tags identifying their associated function and equipment.
- .3 Deliver to location as directed by Departmental Representative; place and store.
- .4 Receive and catalogue items.
  - .1 Submit inventory listing to Departmental Representative.
  - .2 Include approved listings in Maintenance Manual.

1.12 DELIVERY, STORAGE AND HANDLING

.1 Store spare parts, maintenance materials, and special tools in manner to prevent damage or deterioration.

.2 Store in original and undamaged condition with manufacturer's seal and labels intact.

.3 Store components subject to damage from weather in weatherproof enclosures.

.4 Store paints and freezable materials in a heated and ventilated room.

.5 Remove and replace damaged products at own expense and for review by Departmental Representative.

1.13 WARRANTIES AND BONDS

.1 Develop warranty management plan to contain information relevant to Warranties.

.2 Submit warranty management plan, 30 days before planned pre-warranty conference, to Departmental Representative approval.

.3 Warranty management plan to include required actions and documents to assure that Departmental Representative receives warranties to which it is entitled.

.4 Provide plan in narrative form and contain sufficient detail to make it suitable for use by future maintenance and repair personnel.

.5 Submit, warranty information made available during construction phase, to Departmental Representative for approval prior to each monthly pay estimate.

.6 Assemble approved information in binder, submit upon acceptance of work and organize binder as follows:
- .1 Separate each warranty or bond with index tab sheets keyed to Table of Contents listing.
- .2 List subcontractor, supplier, and manufacturer, with name, address, and telephone number of responsible principal.
- .3 Obtain warranties and bonds, executed in duplicate by subcontractors, suppliers, and manufacturers, within [ten] days after completion of applicable item of work.
- .4 Verify that documents are in proper form, contain full information, and are notarized.
- .5 Co-execute submittals when required.
- .6 Retain warranties and bonds until time specified for submittal.

.7 Except for items put into use with Owner's permission, leave date of beginning of time of warranty until Date of Substantial Performance is determined.

.8 Conduct joint 4 month and 9 month warranty inspection, measured from time of acceptance, by Departmental Representative.

.9 Include information contained in warranty management plan as follows:
- .1 Roles and responsibilities of personnel associated with warranty process, including points of contact and telephone numbers within the organizations of Contractors, subcontractors, manufacturers or suppliers involved.
- .2 Listing and status of delivery of Certificates of Warranty for extended warranty items, to include HVAC balancing, pumps, motors, transformers, and commissioned systems such as fire protection, alarm systems, sprinkler systems.
- .3 Provide list for each warranted equipment, item, feature of construction or system indicating:
  - .1 Name of item.
  - .2 Model and serial numbers.
  - .3 Location where installed.
  - .4 Name and phone numbers of manufacturers or suppliers.
  - .5 Names, addresses and telephone numbers of sources of spare parts.
  - .6 Warranties and terms of warranty: include one-year overall warranty of construction. Indicate items that have extended warranties and show separate warranty expiration dates.
  - .7 Cross-reference to warranty certificates as applicable.
  - .8 Starting point and duration of warranty period.
  - .9 Summary of maintenance procedures required to continue warranty in force.
  - .10 Cross-Reference to specific pertinent Operation and Maintenance manuals.
  - .11 Organization, names and phone numbers of persons to call for warranty service.
  - .12 Typical response time and repair time expected for various warranted equipment.
- .4 Contractor's plans for attendance at 4 and 9 month post-construction warranty inspections.
- .5 Procedure and status of tagging of equipment covered by extended warranties.
- .6 Post copies of instructions near selected pieces of equipment where operation is critical for warranty and/or safety reasons.

.10 Respond in timely manner to oral or written notification of required construction warranty repair work.

.11 Written verification to follow oral instructions.
  .1 Failure to respond will be cause for the Departmental Representative proceed with action against Contractor.

1.14 WARRANTY TAGS

.1 Tag, at time of installation, each warranted item. Provide durable, oil and water resistant tag approved by Departmental Representative.

.2 Attach tags with copper wire and spray with waterproof silicone coating.

.3 Leave date of acceptance until project is accepted for occupancy.

.4 Indicate following information on tag:
  .1 Type of product/material.
  .2 Model number.
  .3 Serial number.
  .4 Contract number.
  .5 Warranty period.
  .6 Inspector's signature.
  .7 Construction Contractor.

PART 2 – PRODUCTS

2.1 NOT USED

.1 Not Used.

PART 3 – EXECUTION

3.1 NOT USED

.1 Not Used.

END OF SECTION

Part 1 General

1.1 ADMINISTRATIVE REQUIREMENTS

.1 Demonstrate scheduled operation and maintenance of equipment and systems to Owner's personnel two weeks prior to date of substantial performance.

.2 Owner: provide list of personnel to receive instructions, and co-ordinate their attendance at agreed-upon times.

.3 Preparation:

.1 Verify conditions for demonstration and instructions comply with requirements.

.2 Verify designated personnel are present.

.3 Ensure equipment has been inspected and put into operation in accordance.

.4 Ensure testing, adjusting, and balancing have been performed in accordance with Section 01 91 13- General Commissioning (Cx) Requirements and equipment and systems are fully operational.

.4 Demonstration and Instructions:

.1 Demonstrate start-up, operation, control, adjustment, trouble-shooting, at the scheduled location.

.2 Instruct personnel in phases of operation and maintenance using operation and maintenance manuals as basis of instruction.

.3 Review contents of manual in detail to explain aspects of operation and maintenance.

.4 Prepare and insert additional data in operations and maintenance manuals when needed during instructions.

.5 Time Allocated for Instructions: ensure amount of time required for instruction of each item of equipment or system as follows:

.1 Section 21.

.2 Section 22.

.3 Section 23.

.4 Section 25.

.5 Section 26.

1.2 ACTION AND INFORMATIONAL SUBMITTALS

.1 Provide submittals in accordance with Section 01 33 00- Submittal Procedures.

.2 Submit schedule of time and date for demonstration of each item of equipment and each system two weeks prior to designated dates, for Departmental Representative's approval.

.3 Submit reports within one week after completion of demonstration, that demonstration and instructions have been satisfactorily completed.

.4 Give time and date of each demonstration, with list of persons present.

.5 Provide copies of completed operation and maintenance manuals for use in demonstrations and instructions.

1.3 QUALITY ASSURANCE

.1 When specified in individual Sections requiring manufacturer to provide authorized representative to demonstrate operation of equipment and systems:

.1 Instruct Owner's personnel.

.2 Provide written report that demonstration and instructions have been completed.

Part 2 Products

2.1 NOT USED

Part 3 Execution

3.1 NOT USED

END OF SECTION

Part 1 General

1.1 SUMMARY

.1 Section Includes:

.1 General requirements relating to commissioning of project's components and systems, specifying general requirements to PV of components, equipment, sub-systems, systems, and integrated systems.

.2 Acronyms:

.1 AFD - Alternate Forms of Delivery, service provider.

.2 BMM - Building Management Manual.

.3 Cx - Commissioning.

.4 EMCS - Energy Monitoring and Control Systems.

.5 O&M - Operation and Maintenance.

.6 PI - Product Information.

.7 PV - Performance Verification.

.8 TAB - Testing, Adjusting and Balancing.

1.2 GENERAL

.1 Cx is a planned program of tests, procedures and checks carried out systematically on systems and integrated systems of the finished Project. Cx is performed after systems and integrated systems are completely installed, functional and Contractor's Performance Verification responsibilities have been completed and approved. Objectives:

.1 Verify installed equipment, systems and integrated systems operate in accordance with Contract Documents and design criteria and intent.

.2 Ensure appropriate documentation is compiled into the BMM.

.3 Effectively train O&M staff.

.2 Contractor assists in Cx process, operating equipment and systems, troubleshooting and making adjustments as required.

.1 Systems to be operated at full capacity under various modes to determine if they function correctly and consistently at peak efficiency. Systems to be interactively with each other as intended in accordance with Contract Documents and design criteria.

.2 During these checks, adjustments to be made to enhance performance to meet environmental or user requirements.

.3 Design Criteria: as per client's requirements or determined by designer. To meet Project functional and operational requirements.

.4 AFD managed projects the term Departmental Representative in Cx specifications to be interpreted as AFD Service Provider.

1.3 COMMISSIONING OVERVIEW

.1 Section 01 91 31- Commissioning (Cx) Plan.

.2 For Cx responsibilities refer to Section 01 91 31- Commissioning (Cx) Plan.

.3 Cx to be a line item of Contractor's cost breakdown.

.4 Cx activities supplement field quality and testing procedures described in relevant technical sections.

.5 Cx is conducted in concert with activities performed during stage of project delivery. Cx identifies issues in Planning and Design stages which are addressed during Construction and Cx stages to ensure the built [facility]is constructed and proven to operate satisfactorily under weather, environmental and occupancy conditions to meet functional and operational requirements. Cx activities includes transfer of critical knowledge to facility operational personnel.

.6 Departmental Representative will issue Interim Acceptance Certificate when:

.1 Completed Cx documentation has been received, reviewed for suitability and approved by Departmental Representative.

.2 Equipment, components and systems have been commissioned.

.3 O&M training has been completed.

1.4 NON-CONFORMANCE TO PERFORMANCE VERIFICATION REQUIREMENTS

.1 Should equipment, system components, and associated controls be incorrectly installed or malfunction during Cx, correct deficiencies, re-verify equipment and components within the unfunctional system, including related systems as deemed required by Departmental Representative, to ensure effective performance.

.2 Costs for corrective work, additional tests, inspections, to determine acceptability and proper performance of such items to be borne by Contractor. Above costs to be in form of progress payment reductions or hold-back assessments.

1.5 PRE-CX REVIEW

.1 Before Construction:

.1 Review Contract Documents, confirm by writing to Departmental Representative.

.1 Adequacy of provisions for Cx.

.2 Aspects of design and installation pertinent to success of Cx.

.2 During Construction:

.1 Co-ordinate provision, location and installation of provisions for Cx.

.3 Before start of Cx:

.1 Have completed Cx Plan up-to-date.

.2 Ensure installation of related components, equipment, sub-systems, systems is complete.

.3 Fully understand Cx requirements and procedures.

.4 Have Cx documentation shelf-ready.

.5 Understand completely design criteria and intent and special features.

.6 Submit complete start-up documentation to Departmental Representative.

.7 Have Cx schedules up-to-date.

.8 Ensure systems have been cleaned thoroughly.

.9 Complete TAB procedures on systems, submit TAB reports to Departmental Representative for review and approval.

.10 Ensure "As-Built" system schematics are available.

.4 Inform Departmental Representative in writing of discrepancies and deficiencies on finished works.

1.6 CONFLICTS

.1 Report conflicts between requirements of this section and other sections to Departmental Representative before start-up and obtain clarification.

.2 Failure to report conflict and obtain clarification will result in application of most stringent requirement.

1.7 ACTION AND INFORMATIONAL SUBMITTALS

.1 Submittals: in accordance with Section 01 33 00- Submittal Procedures.

.1 Submit no later than 4 weeks after award of Contract:

.1 Name of Contractor's Cx agent.

.2 Draft Cx documentation.

.3 Preliminary Cx schedule.

.2 Request in writing to Departmental Representative for changes to submittals and obtain written approval at least 8 weeks prior to start of Cx.

.3 Submit proposed Cx procedures to Departmental Representative where not specified and obtain written approval at least 8 weeks prior to start of Cx.

.4 Provide additional documentation relating to Cx process required by Departmental Representative.

1.8 COMMISSIONING DOCUMENTATION

.1 Refer to Section 01 91 33 - Commissioning (Cx) Forms: Installation Check Lists and Product Information (PI) / Performance Verification (PV) Forms for requirements and instructions for use.

.2 Departmental Representative to review and approve Cx documentation.

.3 Provide completed and approved Cx documentation to Departmental Representative.

1.9 COMMISSIONING SCHEDULE

.1 Provide detailed Cx schedule as part of construction schedule in accordance with Section 01 32 16.07- Construction Progress Schedules - Bar (GANTT) Chart.

.2 Provide adequate time for Cx activities prescribed in technical sections and commissioning sections including:

.1 Approval of Cx reports.

.2 Verification of reported results.

.3 Repairs, retesting, re-commissioning, re-verification.

.4 Training.

1.10 COMMISSIONING MEETINGS

.1 Convene Cx meetings following project meetings: Section 01 32 16.07- Construction Progress Schedules - Bar (GANTT) Chart and as specified herein.

.2 Purpose: to resolve issues, monitor progress, identify deficiencies, relating to Cx.

.3 Continue Cx meetings on regular basis until commissioning deliverables have been addressed.

.4 At 60 % construction completion stage. Section 01 32 16.07- Construction Progress Schedules - Bar (GANTT) Chart. Departmental Representative to call a separate Cx scope meeting to review progress, discuss schedule of equipment start-up activities and prepare for Cx. Issues at meeting to include:

.1 Review duties and responsibilities of Contractor and subcontractors, addressing delays and potential problems.

.2 Determine the degree of involvement of trades and manufacturer's representatives in the commissioning process.

.5 Thereafter Cx meetings to be held until project completion and as required during equipment start-up and functional testing period.

.6 Meeting will be chaired by Departmental Representative, who will record and distribute minutes.

.7 Ensure subcontractors and relevant manufacturer representatives are present at 60% and subsequent Cx meetings and as required.

1.11 STARTING AND TESTING

.1 Contractor assumes liabilities and costs for inspections. Including disassembly and re-assembly after approval, starting, testing and adjusting, including supply of testing equipment.

1.12 WITNESSING OF STARTING AND TESTING

.1 Provide days notice prior to commencement.

.2 Departmental Representative to witness of start-up and testing.

.3 Contractor's Cx Agent to be present at tests performed and documented by sub-trades, suppliers and equipment manufacturers.

1.13 MANUFACTURER'S INVOLVEMENT

.1 Factory testing: manufacturer to:

.1 Coordinate time and location of testing.

.2 Provide testing documentation for approval by Departmental Representative.

.3 Arrange for Departmental Representative to witness tests.

.4 Obtain written approval of test results and documentation from Departmental Representative before delivery to site.

.2 Obtain manufacturers installation, start-up and operations instructions prior to start-up of components, equipment and systems and review with Departmental Representative

.1 Compare completed installation with manufacturer's published data, record discrepancies, and review with manufacturer.

.2 Modify procedures detrimental to equipment performance and review same with manufacturer before start-up.

.3 Integrity of warranties:

.1 Use manufacturer's trained start-up personnel where specified elsewhere in other divisions or required to maintain integrity of warranty.

.2 Verify with manufacturer that testing as specified will not void warranties.

.4 Qualifications of manufacturer's personnel:

.1 Experienced in design, installation and operation of equipment and systems.

.2 Ability to interpret test results accurately.

.3 To report results in clear, concise, logical manner.

1.14 PROCEDURES

.1 Verify that equipment and systems are complete, clean, and operating in normal and safe manner prior to conducting start-up, testing and Cx.

.2 Conduct start-up and testing in following distinct phases:

.1 Included in delivery and installation:

.1 Verification of conformity to specification, approved shop drawings and completion of PI report forms.

.2 Visual inspection of quality of installation.

.2 Start-up: follow accepted start-up procedures.

.3 Operational testing: document equipment performance.

.4 System PV: include repetition of tests after correcting deficiencies.

.5 Post-substantial performance verification: to include fine-tuning.

.3 Correct deficiencies and obtain approval from Departmental Representative after distinct phases have been completed and before commencing next phase.

.4 Document require tests on approved PV forms.

.5 Failure to follow accepted start-up procedures will result in re-evaluation of equipment by an independent testing agency selected by Departmental Representative. If results reveal that equipment start-up was not in accordance with requirements, and resulted in damage to equipment, implement following:

.1 Minor equipment/systems: implement corrective measures approved by Departmental Representative.

.2 Major equipment/systems: if evaluation report concludes that damage is minor, implement corrective measures approved by Departmental Representative.

.3 If evaluation report concludes that major damage has occurred, Departmental Representative shall reject equipment.

.1 Rejected equipment to be remove from site and replace with new.

.2 Subject new equipment/systems to specified start-up procedures.

1.15 START-UP DOCUMENTATION

.1 Assemble start-up documentation and submit to Departmental Representative for approval before commencement of commissioning.

.2 Start-up documentation to include:

.1 Factory and on-site test certificates for specified equipment.

.2 Pre-start-up inspection reports.

.3 Signed installation/start-up check lists.

.4 Start-up reports,

.5 Step-by-step description of complete start-up procedures, to permit Departmental Representative to repeat start-up at any time.

1.16 OPERATION AND MAINTENANCE OF EQUIPMENT AND SYSTEMS

.1 After start-up, operate and maintain equipment and systems as directed by equipment/system manufacturer.

.2 With assistance of manufacturer develop written maintenance program and submit Departmental Representative for approval before implementation.

.3 Operate and maintain systems for length of time required for commissioning to be completed.

.4 After completion of commissioning, operate and maintain systems until issuance of certificate of interim acceptance.

1.17 TEST RESULTS

.1 If start-up, testing and/or PV produce unacceptable results, repair, replace or repeat specified starting and/or PV procedures until acceptable results are achieved.

.2 Provide manpower and materials, assume costs for re-commissioning.

1.18 START OF COMMISSIONING

.1 Notify Departmental Representative at least days prior to start of Cx.

.2 Start Cx after elements of building affecting start-up and performance verification of systems have been completed.

1.19 INSTRUMENTS / EQUIPMENT

.1 Submit to Departmental Representative for review and approval:

.1 Complete list of instruments proposed to be used.

.2 Listed data including, serial number, current calibration certificate, calibration date, calibration expiry date and calibration accuracy.

.2 Provide the following equipment as required:

.1 2-way radios.

.2 Ladders.

.3 Equipment as required to complete work.

1.20 COMMISSIONING PERFORMANCE VERIFICATION

.1 Carry out Cx:

.1 Under actual & accepted simulated operating conditions, over entire operating range, in all modes.

.2 On independent systems and interacting systems.

.2 Cx procedures to be repeatable and reported results are to be verifiable.

.3 Follow equipment manufacturer's operating instructions.

.4 EMCS trending to be available as supporting documentation for performance verification.

1.21 WITNESSING COMMISSIONING

.1 Departmental Representative to witness activities and verify results.

1.22 AUTHORITIES HAVING JURISDICTION

.1 Where specified start-up, testing or commissioning procedures duplicate verification requirements of authority having jurisdiction, arrange for authority to witness procedures so as to avoid duplication of tests and to facilitate expedient acceptance of facility.

.2 Obtain certificates of approval, acceptance and compliance with rules and regulation of authority having jurisdiction.

.3 Provide copies to Departmental Representative within 5 days of test and with Cx report.

1.23 COMMISSIONING CONSTRAINTS

.1 Since access into secure or sensitive areas will be very difficult after occupancy it is necessary to complete Cx of occupancy, weather, and seasonal sensitive equipment and systems in these areas before issuance of the Interim Certificate, using, if necessary, simulated thermal loads.

1.24 EXTRAPOLATION OF RESULTS

.1 Where Cx of weather, occupancy, or seasonal-sensitive equipment or systems cannot be conducted under near-rated or near-design conditions, extrapolate part-load results to design conditions when approved by Departmental Representative in accordance with equipment manufacturer's instructions, using manufacturer's data, with manufacturer's assistance and using approved formulae.

1.25 EXTENT OF VERIFICATION

.1 Laboratory areas:

.1 Provide manpower and instrumentation to verify up to 100% of reported results.

.2 Elsewhere:

.1 Provide manpower and instrumentation to verify up to 30% of reported results, unless specified otherwise in other sections.

.3 Number and location to be at discretion of Departmental Representative.

.4 Conduct tests repeated during verification under same conditions as original tests, using same test equipment, instrumentation.

.5 Review and repeat commissioning of systems if inconsistencies found in more than 20% of reported results.

.6 Perform additional commissioning until results are acceptable to Departmental Representative.

1.26 REPEAT VERIFICATIONS

.1 Assume costs incurred by Departmental Representative for third and subsequent verifications where:

.1 Verification of reported results fail to receive Departmental Representative's approval.

.2 Repetition of second verification again fails to receive approval.

.3 Departmental Representative deems Contractor's request for second verification was premature.

1.27 SUNDRY CHECKS AND ADJUSTMENTS

.1 Make adjustments and changes which become apparent as Cx proceeds.

.2 Perform static and operational checks as applicable and as required.

1.28 DEFICIENCIES, FAULTS, DEFECTS

.1 Correct deficiencies found during start-up and Cx to satisfaction of Departmental Representative.

.2 Report problems, faults or defects affecting Cx to Departmental Representative in writing. Stop Cx until problems are rectified. Proceed with written approval from Departmental Representative.

1.29 COMPLETION OF COMMISSIONING

.1 Upon completion of Cx leave systems in normal operating mode.

.2 Except for warranty and seasonal verification activities specified in Cx specifications, complete Cx prior to issuance of Interim Certificate of Completion.

.3 Cx to be considered complete when contract Cx deliverables have been submitted and accepted by Departmental Representative.

1.30 ACTIVITIES UPON COMPLETION OF COMMISSIONING

.1 When changes are made to baseline components or system settings established during Cx process, provide updated Cx form for affected item.

1.31 TRAINING

.1 In accordance with Section 01 91 41- Commissioning (Cx) - Training.

1.32 MAINTENANCE MATERIALS, SPARE PARTS, SPECIAL TOOLS

.1 Supply, deliver, and document maintenance materials, spare parts, and special tools as specified in contract.

1.33 OCCUPANCY

.1 Cooperate fully with Departmental Representative during stages of acceptance and occupancy of facility.

1.34 INSTALLED INSTRUMENTATION

.1 Use instruments installed under Contract for TAB and PV if:

.1 Accuracy complies with these specifications.

.2 Calibration certificates have been deposited with Departmental Representative.

.2 Calibrated EMCS sensors may be used to obtain performance data provided that sensor calibration has been completed and accepted.

1.35 PERFORMANCE VERIFICATION TOLERANCES

.1 Application tolerances:

.1 Specified range of acceptable deviations of measured values from specified values or specified design criteria. Except for special areas, to be within +/- 10% of specified values.

.2 Instrument accuracy tolerances:

.1 To be of higher order of magnitude than equipment or system being tested.

.3 Measurement tolerances during verification:

.1 Unless otherwise specified actual values to be within +/- 2% of recorded values.

1.36 OWNER'S PERFORMANCE TESTING

.1 Performance testing of equipment or system by Departmental Representative will not relieve.Contractor from compliance with specified start-up and testing procedures.

Part 2 Products

2.1 NOT USED

Part 3 Execution

3.1 NOT USED

END OF SECTION

Part 1 General

1.1 SUMMARY

.1 Section Includes:

.1 Description of overall structure of Cx Plan and roles and responsibilities of Cx team.

1.2 REFERENCE STANDARDS

.1 American Water Works Association (AWWA)

.2 National Fire Protection Association (NFPA)

.1 NFPA-13-02, Installation of Sprinkler Systems Handbook.

.2 NFPA-14-02, Automatic Sprinkler Systems Handbook.

.3 NFPA-20-03, Standard for the Installation of Stationary Fire Pumps for Fire Protection.

.3 Public Works and Government Services Canada (PSPC)

.1 PSPC - Commissioning Guidelines CP.4 -3rd edition-03.

.4 Underwriters' Laboratories of Canada (ULC)

1.3 GENERAL

.1 Provide a fully functional facility:

.1 Systems, equipment and components meet user's functional requirements before date of acceptance, and operate consistently at peak efficiencies and within specified energy budgets under normal loads.

.2 Facility user and O&M personnel have been fully trained in aspects of installed systems.

.3 Optimized life cycle costs.

.4 Complete documentation relating to installed equipment and systems.

.2 Term "Cx" in this section means "Commissioning".

.3 Use this Cx Plan as master planning document for Cx:

.1 Outlines organization, scheduling, allocation of resources, documentation, pertaining to implementation of Cx.

.2 Communicates responsibilities of team members involved in Cx Scheduling, documentation requirements, and verification procedures.

.3 Sets out deliverables relating to O&M, process and administration of Cx.

.4 Describes process of verification of how built works meet design’s requirements.

.5 Produces a complete functional system prior to issuance of Certificate of Occupancy.

.6 Management tool that sets out scope, standards, roles and responsibilities, expectations, deliverables, and provides:

.1 Overview of Cx.

.2 General description of elements that make up Cx Plan.

.3 Process and methodology for successful Cx.

.4 Acronyms:

.1 Cx - Commissioning.

.2 BMM - Building Management Manual.

.3 EMCS - Energy Monitoring and Control Systems.

.4 MSDS - Material Safety Data Sheets.

.5 PI - Product Information.

.6 PV - Performance Verification.

.7 TAB - Testing, Adjusting and Balancing.

.8 WHMIS - Workplace Hazardous Materials Information System.

.5 Commissioning terms used in this Section:

.1 Bumping: short term start-up to prove ability to start and prove correct rotation.

.2 Deferred Cx - Cx activities delayed for reasons beyond Contractor's control due to lack of occupancy, weather conditions, need for heating/cooling loads.

1.4 DEVELOPMENT OF 100% CX PLAN

.1 Cx Plan to be 95% completed before added into Project Specifications.

.2 Cx Plan to be 100% completed within 8 weeks of award of contract to take into account:

.1 Approved shop drawings and product data.

.2 Approved changes to contract.

.3 Contractor's project schedule.

.4 Cx schedule.

.5 Contractor's, sub-contractor's, suppliers' requirements.

.6 Project construction team's and Cx team's requirements.

.3 Submit completed Cx Plan to Departmental Representative and obtain written approval.

1.5 REFINEMENT OF CX PLAN

.1 During construction phase, revise, refine and update Cx Plan to include:

.1 Changes resulting from Client program modifications.

.2 Approved design and construction changes.

.2 Revise, refine and update every 6 months during construction phase. At each revision, indicate revision number and date.

.3 Submit each revised Cx Plan to Departmental Representative for review and obtain written approval.

.4 Include testing parameters at full range of operating conditions and check responses of equipment and systems.

1.6 COMPOSITION, ROLES AND RESPONSIBILITIES OF CX TEAM

.1 Departmental Representative to maintain overall responsibility for project and is sole point of contact between members of commissioning team.

.2 Project Manager will select Cx Team consisting of following members:

.1 PSPC Design Quality Review Team: during construction, will conduct periodic site reviews to observe general progress.

.2 PSPC Quality Assurance Commissioning Manager: ensures Cx activities are carried out to ensure delivery of a fully operational project including:

.1 Review of Cx documentation from operational perspective.

.2 Review for performance, reliability, durability of operation, accessibility, maintainability, operational efficiency under conditions of operation.

.3 Protection of health, safety and comfort of occupants and O&M personnel.

.4 Monitoring of Cx activities, training, development of Cx documentation.

.5 Work closely with members of Cx Team.

.3 Departmental Representative is responsible for:

.1 Organizing Cx.

.2 Monitoring operations Cx activities.

.3 Witnessing, certifying accuracy of reported results.

.4 Witnessing and certifying TAB and other tests.

.5 Developing BMM.

.6 Ensuring implementation of final Cx Plan.

.7 Performing verification of performance of installed systems and equipment.

.8 Implementation of Training Plan.

.4 Construction Team: contractor, sub-contractors, suppliers and support disciplines, is responsible for construction/installation in accordance with Contract Documents, including:

.1 Testing.

.2 TAB.

.3 Performance of Cx activities.

.4 Delivery of training and Cx documentation.

.5 Assigning one person as point of contact with Consultant and PSPC Cx Manager for administrative and coordination purposes.

.5 Contractor's Cx agent implements specified Cx activities including:

.1 Demonstrations.

.2 Training.

.3 Testing.

.4 Preparation, submission of test reports.

.6 Property Manager: represents lead role in Operation Phase and onwards and is responsible for:

.1 Receiving facility.

.2 Day-To-Day operation and maintenance of facility.

1.7 CX PARTICIPANTS

.1 Employ the following Cx participants to verify performance of equipment and systems:

.1 Installation contractor/subcontractor:

.1 Equipment and systems except as noted.

.2 Equipment manufacturer: equipment specified to be installed and started by manufacturer.

.1 To include performance verification.

.3 Specialist subcontractor: equipment and systems supplied and installed by specialist subcontractor.

.4 Specialist Cx agency:

.1 Possessing specialist qualifications and installations providing environments essential to client's program but are outside scope or expertise of Cx specialists on this project.

.5 Client: responsible for intrusion and access security systems.

.6 Ensure that Cx participant:

.1 Could complete work within scheduled time frame.

.2 Available for emergency and troubleshooting service during first year of occupancy by user for adjustments and modifications outside responsibility of O&M personnel, including:

.1 Modify ventilation rates to meet changes in off-gassing.

.2 Changes to heating or cooling loads beyond scope of EMCS.

.3 Changes to EMCS control strategies beyond level of training provided to O&M personnel.

.4 Redistribution of electrical services.

.5 Modifications of fire alarm systems.

.6 Modifications to voice communications systems.

.7 Provide names of participants to Departmental Representative and details of instruments and procedures to be followed for Cx 3 months prior to starting date of Cx for review and approval.

1.8 EXTENT OF CX

.1 Cx Structural and Architectural Systems:

.1 Architectural and structural:

.1 Equipment:

.1 Security and monitoring systems

.2 Doors, windows, related hardware:

.1 Electrified hardware for new doors

.2 Commission mechanical systems and associated equipment:

.1 Plumbing systems:

.1 Domestic CWS and HWS.

.2 HVAC and exhaust systems:

.1 HVAC systems

.2 General exhaust systems

.3 Exhaust systems and related systems

.4 Heat recovery systems

.5 Smoke control systems installed is contract.

.6 Stair shaft pressurization systems.

.7 Dynamic Barrier Zone (DBZ)

.3 Fire and life safety systems:

.1 Wet pipe sprinkler systems.

.2 Fire extinguishers.

.4 Noise and vibration control systems for mechanical systems.

.5 Seismic restraint and control measures.

.6 EMCS:

.7 Energy metering systems for electricity.

.3 Commission electrical systems and equipment:

.1 High voltage:

.1 High voltage switch gear and transformation equipment.
.2 High voltage distribution systems.

.2 Low voltage below 750 V:
.1 Low voltage equipment.
.2 Low voltage distribution systems.
.3 Central clock systems.
.4 Voice communications systems.
.5 Audio/visual systems.
.6 Electronic data and communications information systems.
.7 Simultaneous translation systems.
.8 MP's call systems.
.9 Messenger call systems.
.10 Division bells systems.
.3 Emergency power generation systems:
.1 Fuel systems.
.2 Transfer switchgear and controllers.
.3 Uninterruptible power systems.
.4 Lighting systems:
.1 Lighting equipment.
.2 Distribution systems.
.3 Emergency lighting systems, including battery packs.
.4 Fire exit emergency signage.
.5 Fire alarm systems, equipment:
.1 Annunciators.
.2 Control panels.
.3 Fire alarm battery banks.
.6 Other systems and equipment:
.1 Intrusion and access security and safety systems as follows:
.2 Lightning protection systems.
.3 Watchman's tour system.

1.9 DELIVERABLES RELATING TO O&M PERSPECTIVES

.1 General requirements:
.1 Compile French documentation.
.2 Documentation to be computer-compatible format ready for inputting for data management.

.2 Provide deliverables:
.1 Warranties.
.2 Project record documentation.
.3 Inventory of spare parts, special tools and maintenance materials.
.4 Maintenance Management System (MMS) identification system used.
.5 WHMIS information.

.6 MSDS data sheets.

.7 Electrical Panel inventory containing detailed inventory of electrical circuitry for each panel board. Duplicate of inventory inside each panel.

1.10 DELIVERABLES RELATING TO THE CX PROCESS

.1 General:

.1 Start-up, testing and Cx requirements, conditions for acceptance and specifications form part of relevant technical sections of these specifications.

.2 Definitions:

.1 Cx as used in this section includes:

.1 Cx of components, equipment, systems, subsystems, and integrated systems.

.2 Factory inspections and performance verification tests.

.3 Deliverables: provide:

.1 Cx Specifications.

.2 Startup, pre-Cx activities and documentation for systems, and equipment.

.3 Completed installation checklists (ICL).

.4 Completed product information (PI) report forms.

.5 Completed performance verification (PV) report forms.

.6 Results of Performance Verification Tests and Inspections.

.7 Description of Cx activities and documentation.

.8 Description of Cx of integrated systems and documentation.

.9 Tests of following witnessed by PSPC Design Quality Review Team:

.10 Tests performed by Owner/User.

.11 Training Plans.

.12 Cx Reports.

.13 Prescribed activities during warranty period.

.4 Departmental Representative to witness and certify tests and reports of results provided to Departmental Representative.

.5 Departmental Representative to participate.

1.11 PRE-CX ACTIVITIES AND RELATED DOCUMENTATION

.1 Items listed in this Cx Plan include the following:

.1 Pre-Start-Up inspections: by Departmental Representative prior to permission to start up and rectification of deficiencies to Departmental Representative's satisfaction.

.2 Departmental Representative to use approved check lists.

.3 Departmental Representative will monitor some of these pre-start-up inspections.

.4 Include completed documentation with Cx report.

.5 Conduct pre-start-up tests: conduct pressure, static, flushing, cleaning, and "bumping" during construction as specified in technical sections. To be witnessed and certified by Departmental Representative and does not form part of Cx specifications.

.6 Departmental Representative will monitor some of these inspections and tests.

.7 Include completed documentation in Cx report.

.2 Pre-Cx activities - ARCHITECTURAL AND STRUCTURAL:

.1 Equipment:

.1 Security and monitoring systems

.2 Doors, windows, related hardware:

.1 Electrified hardware for new doors

.3 Pre-Cx activities - MECHANICAL:

.1 HVAC equipment and systems:

.1 "Bump" each item of equipment in its "stand-alone" mode.

.2 At this time, complete pre-start-up checks and complete relevant documentation.

.3 After equipment has been started, test related systems in conjunction with control systems on a system-by-system basis.

.4 Perform TAB on systems. TAB reports to be approved by Departmental Representative.

.2 EMCS:

.1 EMCS trending to be available as supporting documentation for performance verification.

.2 Perform point-by-point testing in parallel with start-up.

.3 Carry out point-by-point verification.

.4 Demonstrate performance of systems, to be witnessed by Departmental Representative prior to start of 30 day Final Acceptance Test period.

.5 Perform final Cx and operational tests during demonstration period and 30 day test period.

.6 Only additional testing after foregoing have been successfully completed to be "Off-Season Tests".

.4 Pre-Cx activities - LIFE SAFETY SYSTEMS

.1 Include equipment and systems identified above.

.2 Reports of test results to be witnessed and certified by Departmental Representative before verification.

.5 Pre-Cx activities - ELECTRICAL:

.1 Low voltage distribution systems under 750 V:

.1 Requires independent testing agency to perform pre- energization and post-energization tests.

.2 Emergency power generation systems

.1 Transfer switches: test by simulating loss of power. Verify availability of power at equipment requiring same.

.2 Uninterruptible power systems: test under full and partial load conditions.

.3 Lighting systems

.1 Emergency lighting systems:

.1 Tests to include verification of lighting levels and coverage, initially by disrupting normal power.

.4 Fire alarm systems: test after other safety and security systems are completed. Testing to include a complete verification in accordance with ULC requirements. Departmental Representative has witnessed and certified report, demonstrate devices and zones to Departmental Representative.

.5 Low voltage systems: these include:

.1 Clock, communications, low voltage lighting control systems and data communications systems.

.2 Special systems such as Simultaneous Translation systems, MPs Call systems, Messenger Call systems, Division Bell systems.

.6 Security, surveillance and intrusion alarm systems: to include verification by Departmental Representative.

.7 Lightning protection systems.

.8 Watchman's tour systems.

1.12 START-UP

.1 Start up components, equipment and systems.

.2 Equipment manufacturer, supplier, installing specialist sub-contractor, as appropriate, to start-up, under Contractor's direction, following equipment.

.3 Departmental Representative to monitor some of these start-up activities.

.1 Rectify start-up deficiencies to satisfaction of Departmental Representative.

.4 Performance Verification (PV):

.1 Approved Cx Agent to perform.

.1 Repeat when necessary until results are acceptable to Departmental Representative.

.2 Use procedures modified generic procedures to suit project requirements.

.3 Departmental Representative to witness and certify reported results using approved PI and PV forms.

.4 Departmental Representative to approve completed PV reports and provide to Departmental Representative.

.5 Departmental Representative reserves right to verify up to 30% of reported results at random.

.6 Failure of randomly selected item shall result in rejection of PV report or report of system startup and testing.

1.13 CX ACTIVITIES AND RELATED DOCUMENTATION

.1 Perform Cx by specified Cx agency using procedures developed by Departmental Representative and approved by Departmental Representative.

.2 Departmental Representative to monitor Cx activities.

.3 Upon satisfactory completion, Cx agency performing tests to prepare Cx Report using approved PV forms.

.4 Departmental Representative to witness, certify reported results of, Cx activities and forward to Departmental Representative.

.5 Departmental Representative reserves right to verify a percentage of reported results at no cost to contract.

1.14 CX OF INTEGRATED SYSTEMS AND RELATED DOCUMENTATION

.1 Cx to be performed by specified Cx specialist, using procedures developed by Departmental Representative and approved by Departmental Representative.

.2 Tests to be witnessed by Departmental Representative and documented on approved report forms.

.3 Upon satisfactory completion, Cx specialist to prepare Cx Report, to be certified by Departmental Representative and submitted to Departmental Representative for review.

.4 Departmental Representative reserves right to verify percentage of reported results.

.5 Integrated systems to include:

.1 HVAC and associated systems forming part of integrated HVAC systems.

.2 Smoke control systems.

.3 Stair shaft pressurization systems.

.4 Indoor air quality.

.5 Environmental space conditions.

.6 Fire alarm systems.

.7 Voice communications systems.

.8 Transfer switch and controllers.

.9 Emergency lighting systems.

.6 Identification:

.1 In later stages of Cx, before hand-over and acceptance Departmental Representative and Cx Manager to co-operate to complete inventory data sheets and provide assistance to PSPC in full implementation of MMS identification system of components, equipment, sub-systems, systems.

1.15 INSTALLATION CHECK LISTS (ICL)

.1 Refer to Section 01 91 33- Commissioning (Cx) Forms: Installation Check Lists and Product Information (PI) / Performance Verification (PV) Forms.

1.16 PRODUCT INFORMATION (PI) REPORT FORMS

.1 Refer to Section 01 91 33- Commissioning (Cx) Forms: Installation Check Lists and Product Information (PI) / Performance Verification (PV) Forms.

1.17 PERFORMANCE VERIFICATION (PV) REPORT

.1 Refer to Section 01 91 33- Commissioning (Cx) Forms: Installation Check Lists and Product Information (PI) / Performance Verification (PV) Forms.

1.18 DELIVERABLES RELATING TO ADMINISTRATION OF CX

.1 General:

.1 Because of risk assessment, complete Cx of occupancy, weather and seasonal-sensitive equipment and systems in these areas before building is occupied.

1.19 CX SCHEDULES

.1 Prepare detailed critical path Cx Schedule and submit to Departmental Representative for review and approval same time as project Construction Schedule. Include:

.1 Milestones, testing, documentation, training and Cx activities of components, equipment, subsystems, systems and integrated systems, including:

.1 Design criteria, design intents.

.2 Pre-TAB review: 28 days after contract award, and before construction starts.

.3 Cx agents' credentials: 60days before start of Cx.

.4 Cx procedures: 3 months after award of contract.

.5 Cx Report format: 3 months after contract award.

.6 Discussion of heating/cooling loads for Cx: 3 months before start-up.

.7 Submission of list of instrumentation with relevant certificates: 21 days before start of Cx.

.8 Notification of intention to start TAB: 21 days before start of TAB.

.9 TAB: after successful start-up, correction of deficiencies and verification of normal and safe operation.

.10 Notification of intention to start Cx: 14days before start of Cx.

.11 Notification of intention to start Cx of integrated systems: after Cx of related systems is completed 14 days before start of integrated system Cx.

.12 Identification of deferred Cx.

.13 Implementation of training plans.

.14 Cx of smoke management/control systems: after Cx of related systems is completed and 7 days before proposed date of Cx these systems.

.15 Cx stair shaft pressurization systems: before issuance of occupancy certificate.

.16 Cx reports: immediately upon successful completion of Cx.

.17 Emergency evacuation exercises: after 80% occupancy and at same time as Cx of stair shaft pressurization systems.

.2 Detailed training schedule to demonstrate no conflicts with testing, completion of project and hand-over to Property Manager.

.3 6 months in Cx schedule for verification of performance in all seasons and wear conditions.

.2 After approval, incorporate Cx Schedule into Construction Schedule.

.3 Consultant, Contractor, Contractor's Cx agent, and Departmental Representative will monitor progress of Cx against this schedule.

1.20 CX REPORTS

.1 Submit reports of tests, witnessed and certified by Departmental Representative to Departmental Representative who will verify reported results.

.2 Include completed and certified PV reports in properly formatted Cx Reports.

.3 Before reports are accepted, reported results to be subject to verification by Departmental Representative.

1.21 ACTIVITIES DURING WARRANTY PERIOD

.1 Cx activities must be completed before issuance of Interim Certificate, it is anticipated that certain Cx activities may be necessary during Warranty Period, including:

.1 Fine tuning of HVAC systems.

.2 Adjustment of ventilation rates to promote good indoor air quality and reduce deleterious effects of VOCs generated by off-gassing from construction materials and furnishings.

.3 Full-scale emergency evacuation exercises.

1.22 TESTS TO BE PERFORMED BY OWNER/USER

.1 None is anticipated on this project.

1.23 TRAINING PLANS

.1 Refer to Section 01 91 41- Commissioning (Cx) - Training.

1.24 FINAL SETTINGS

.1 Upon completion of Cx to satisfaction of Departmental Representative lock control devices in their final positions, indelibly mark settings marked and include in Cx Reports.

Part 2 Products

2.1 NOT USED

Part 3 Execution

3.1 NOT USED

END OF SECTION

Part 1 General

1.1 SUMMARY

.1 Section Includes:

.1 Commissioning forms to be completed for equipment, system and integrated system.

1.2 INSTALLATION/START-UP CHECK LISTS

.1 Include the following data:

.1 Product manufacturer's installation instructions and recommended checks.

.2 Special procedures as specified in relevant technical sections.

.3 Items considered good installation and engineering industry practices deemed appropriate for proper and efficient operation.

.2 Equipment manufacturer's installation/start-up check lists are acceptable for use. As deemed necessary by Departmental Representative supplemental additional data lists will be required for specific project conditions.

.3 Use check lists for equipment installation. Document check list verifying checks have been made, indicate deficiencies and corrective action taken.

.4 Installer to sign check lists upon completion, certifying stated checks and inspections have been performed. Return completed check lists to Departmental Representative. Check lists will be required during Commissioning and will be included in Building Maintenance Manual (BMM) at completion of project.

.5 Use of check lists will not be considered part of commissioning process but will be stringently used for equipment pre-start and start-up procedures.

1.3 PRODUCT INFORMATION (PI) REPORT FORMS

.1 Product Information (PI) forms compiles gathered data on items of equipment produced by equipment manufacturer, includes nameplate information, parts list, operating instructions, maintenance guidelines and pertinent technical data and recommended checks that is necessary to prepare for start-up and functional testing and used during operation and maintenance of equipment. This documentation is included in the BMM at completion of work.

.2 Prior to Performance Verification (PV) of systems complete items on PI forms related to systems and obtain Departmental Representative's approval.

1.4 PERFORMANCE VERIFICATION (PV) FORMS

.1 PV forms to be used for checks, running dynamic tests and adjustments carried out on equipment and systems to ensure correct operation, efficiently and function independently and interactively with other systems as intended with project requirements.

.2 PV report forms include those developed by Contractor records measured data and readings taken during functional testing and Performance Verification procedures.

.3 Prior to PV of integrated system, complete PV forms of related systems and obtain DCC Representative's approval.

1.5 SAMPLES OF COMMISSIONING FORMS

.1 Departmental Representative will develop and provide to Contractor required project-specific Commissioning forms in electronic format complete with specification data.

.2 Revise items on Commissioning forms to suit project requirements.

.3 Samples of Commissioning forms and a complete index of produced to date will be attached to this section.

1.6 CHANGES AND DEVELOPMENT OF NEW REPORT FORMS

.1 When additional forms are required, but are not available from Departmental Representative develop appropriate verification forms and submit to Departmental Representative for approval prior to use.

.1 Additional commissioning forms to be in same format as provided by Departmental Representative.

1.7 COMMISSIONING FORMS

.1 Use Commissioning forms to verify installation and record performance when starting equipment and systems.

.2 Strategy for Use:

.1 Departmental Representative provides Contractor project-specific Commissioning forms with Specification data included.

.2 Contractor will provide required shop drawings information and verify correct installation and operation of items indicated on these forms.

.3 Confirm operation as per design criteria and intent.

.4 Identify variances between design and operation and reasons for variances.

.5 Verify operation in specified normal and emergency modes and under specified load conditions.

.6 Record analytical and substantiating data.

.7 Verify reported results.

.8 Form to bear signatures of recording technician and reviewed and signed off by Departmental Representative.

.9 Submit immediately after tests are performed.

.10 Reported results in true measured SI unit values.

.11 Provide Departmental Representative with originals of completed forms.

.12 Maintain copy on site during start-up, testing and commissioning period.

.13 Forms to be both hard copy and electronic format with typed written results in Building Management Manual in accordance with Section 01 91 51- Building Management Manual (BMM).

1.8 LANGUAGE

.1 To suit the language profile of the awarded contract.

Part 2 Products

2.1 NOT USED

Part 3 Execution

3.1 NOT USED

PERFORMANCE VERIFICATION (PV) FORMS

Index

PERFORMANCE VERIFICATION (PV)

Project: **PWGSC**
Relocation of the Canada Revenue
Agency – 6th floor West Tower

Project No.: R.078221

Equipment: **FAN NO.**

Service:

Location:

Identification:

Manufacturer:

Model:

Serial No.:

Measured Element	**Specified**	**Measured 1**	**Measured 2**
Air flow rate, l/ s			
Air pressure drop, Pa			
Fan– RPM			
Motor - HP/RPM			
Electrical supply V/ph/Hz			

FAN NO.

Testing personnel:

Company:

_____

Signature and date:

_____

Witness:

Company:

_____

Signature and date:

_____

Approved by:

Company:

_____

Signature and date:

_____

COMMENTS:

_____

_____

_____

_____

_____

PERFORMANCE VERIFICATION (PV)

Project: **PWGSC**
Relocation of the Canada Revenue
Agency – 6th floor West Tower

Project No.: R.078221

Equipment: **ELECTRIC WATER HEATER No.**

Service:

Location:

Identification:

Manufacturer:

Model:

Serial No.:

Measured Element	**Specified**	**Measured 1**	**Measured 2**
Electric power, kW			
Electric supply V/ph/Hz			
Amperage T_1 ,T_2, T_3			

ELECTRIC WATER HEATER N°

Testing personnel:

Company:

_____

Signature and date:

_____

Witness:

Company:

_____

Signature and date:

_____

Approved by:

Company:

_____

Signature and date:

_____

COMMENTS:

_____

_____

_____

_____

_____

PERFORMANCE VERIFICATION (PV)

Project: **PWGSC**
Relocation of the Canada Revenue
Agency – 6th floor West Tower

Project No.: R.078221

Equipment: **ELECTRIC BASEBOARD**

Service:

Localisation:

Identification:

Manufacturer:

Model:

Serial No.:

Measured Element	**Specified**	**Measured 1**	**Measured 2**
Transfered heat, kW			

ELECTRIC BASEBOARD

Testing personnel:

Company:

_____

Signature and date:

_____

Witness:

Company:

_____

Signature and date:

_____

Approved by:

Company:

_____

Signature and date:

_____

COMMENTS:

_____

_____

_____

_____

_____

PERFORMANCE VERIFICATION (PV)

Project: **PWGSC**
Relocation of the Canada Revenue
Agency – 6th floor West Tower

Project No.: R.078221

Equipment: **LIGHTING FIXTURE NO.**

Service:

Location:

Identification:

Manufacturer:

Model:

Serial No.:

Measured Element	**Specified**	**Measured 1**	**Measured 2**
Electric supply V/ph/Hz			
Light intensity, lux			

LITGHTING FIXTURE NO.

Testing personnel:

Company:

_____

Signature and date:

_____

Witness:

Company:

_____

Signature and date:

_____

Approved by:

Company:

_____

Signature and date:

_____

COMMENTS:

_____

_____

_____

_____

_____

PERFORMANCE VERIFICATION (PV)

Project: **PWGSC**
Relocation of the Canada Revenue
Agency – 6th floor West Tower

Project No.: R.078221

Equipement: **OCCUPANCY SENSOR N^{O}**

Service:

Location:

Identification:

Manufacturer:

Model:

Serial No.:

Measured Element	**Specified**	**Measured 1**	**Measured 2**
Electric supply V/ph/Hz			
Amperage T_1 ,T_2, T_3			

OCCUPANCY SENSOR N^{O}

Testing personnel:

Company:

_____

Signature and date:

_____

Witness:

Company:

_____

Signature and date:

_____

Approved by:

Company:

_____

Signature and date:

_____

COMMENTS:

_____

_____

_____

_____

_____

PERFORMANCE VERIFICATION (PV)

Project: **PWGSC** **Project No.**: R.078221
Relocation of the Canada Revenue
Agency – 6th floor West Tower

Equipment: **MOTOR**

Service:

Location:

Identification:

Manufacturer:

Model:

Serial No.:

Measured Element	**Specified**	**Measured 1**	**Measured 2**
Number of poles			
rotational direction			
Speed (rpm)			
Insulation (Megohms)			
Current (A) Phase A			
Current (A) Phase B			
Current (A) Phase C			
Voltage (V) Phase A			
Voltage (V) Phase B			
Voltage (V) Phase C			
Protection sizing			
Fuse (A)			
Breaker (A)			
Surge (A)			
Element number			

MOTOR

Testing personnel:

Company:

_____

Signature and date:

_____

Witness:

Company:

_____

Signature and date:

_____

Approved by:

Company:

_____

Signature and date:

_____

COMMENTS:

_____

_____

_____

_____

_____

PERFORMANCE VERIFICATION (PV)

Project: **PWGSC**
Relocation of the Canada Revenue Agency – 6th floor West Tower

Project No.: R.078221

Equipment: **DISTRIBUTION PANEL**

Service:

Location:

Identification:

Manufacturer:

Model:

Serial No.:

Measured Element	Specified	Measured 1	Measured 2
Verification of installation			
Abcense of water, humidity and dust			
Exterior appearance: paint, equipment's surface finish, indicators, lamps, nameplates			
Wiring : Identification (cables & wires), caliber, connections and tightening screw-ons			

DISTRIBUTION PANEL

Testing personnel:

Company:

_____

Signature and date:

_____

Witness:

Company:

_____

Signature and date:

_____

Approved by:

Company:

_____

Signature and date:

_____

COMMENTS:

_____

_____

_____

_____

_____

PERFORMANCE VERIFICATION (PV)

Project: **PWGSC**
Relocation of the Canada Revenue
Agency – 6th floor West Tower

Project No.: R.078221

Equipment: **FIRE ALARM TESTING**

Service:

Location:

Identification:

Manufacturer:

Model:

Serial No.:

Measured Element	**Specified**	**Measured 1**	**Measured 2**
Sound level dB			
Vocal message audibility and intelligibility			

FIRE ALARM TESTING

Testing personnel:

Company:

_____

Signature and date:

_____

Witness:

Company:

_____

Signature and date:

_____

Approved by:

Company:

_____

Signature and date:

_____

COMMENTS:

_____

_____

_____

_____

_____

PERFORMANCE VERIFICATION (PV)

Project: **PWGSC** **Project No.**: R.078221
Relocation of the Canada Revenue
Agency – 6th floor West Tower

Equipment: **HEAT PUMPS NO.**

Service:

Location:

Identification:

Manufacturer:

Model:

Serial No.:

Measured Element	**Specified**	**Measured 1**	**Measured 2**
Evaporator			
- Entering water temperature, ºC			
- Leaving water temperature, ºC			
- Temperature differentia, ºC			
- Water pressure loss, kPa			
- Water flow rate, l/s			
- Heat transferred, kW (ton)			
Condenser			
- Entering water temperature, ºC			
- Leaving water temperature, ºC			
- Temperature differentia, ºC			
- Water pressure loss, kPa			
- Water flow rate, l/s			
- Heat transferred, kW (ton)			
Compressor			
- Electrical supply V/ph/Hz			
- Amperage T_1, T_2, T_3			
- Efficacy (kW/t)			

HEAT PUMPS NO.

Testing personnel:

Company:

_____

Signature and date:

_____

Witness:

Company:

_____

Signature and date:

_____

Approved by:

Company:

_____

Signature and date:

_____

COMMENTS:

_____

_____

_____

_____

_____

PERFORMANCE VERIFICATION (PV)

Project: **PWGSC** **Project No.**: R.078221
Relocation of the Canada Revenue
Agency – 6th floor West Tower

Equipment: **TESTING OF PIPING**

Service: Plumbing, piping, fire protection

Location:

Identification of the section tested:

Measured Element	**Specified**	**Measured 1**	**Measured 2**
Initial pressure, kPa			
Pressure after 30 minutes, kPa			
- Pressure restored to the initial pressure, kPa			
Pressure after 1 hour, kPa			
- Pressure restored to the initial pressure, kPa			
Pressure stabilised at , kPa			
- Start time			
- End time			
- Duration, hours/minutes			

TESTING OF PIPING
SERVICE:

Testing personnel:

Company:

_____

Signature and date:

_____

Witness:

Company:

_____

Signature and date:

_____

Approved by:

Company:

_____

Signature and date:

_____

COMMENTS:

_____

_____

_____

_____

_____

PERFORMANCE VERIFICATION (PV)

Project: **PWGSC**
Relocation of the Canada Revenue
Agency – 6th floor West Tower

Project No.: R.078221

Equipment: **PROBE NO.**

Service:

Location:

Identification:

Manufacturer:

Model:

Serial No.:

Measured Element	**Specified**	**Measured 1**	**Measured 2**
Ambient temperature °C			

PROBE NO.

Testing personnel:

Company:

_____

Signature and date:

_____

Witness:

Company:

_____

Signature and date:

_____

Approved by:

Company:

_____

Signature and date:

_____

COMMENTS:

_____

_____

_____

_____

_____

PERFORMANCE VERIFICATION (PV)

Project: **PWGSC**
Relocation of the Canada Revenue Agency – 6th floor West Tower

Project No.: R.078221

Equipment: **TESTING OF AIR DUCTS**

Service:

Location:

Identification of the section tested:

Pressure (High-Medium-Low):

Measured Element	Specified	Measured 1	Measured 2
Air pressure, Pa or kPa			
Air supply rate, l/s			
Air flow rate at exits (grilles and diffusers) – Total, l/s			
Leakage %			
Presence of audible leakage			

TESTING OF AIR DUCTS
SYSTEM:

Testing personnel:

Company:

_____

Signature and date:

_____

Witness:

Company:

_____

Signature and date:

_____

Approved by:

Company:

_____

Signature and date:

_____

COMMENTS:

_____

_____

_____

_____

_____

END OF SECTION

Part 1 General

1.1 SUMMARY

.1 Section Includes:

.1 This Section specifies roles and responsibilities of Commissioning Training.

1.2 TRAINEES

.1 Trainees: personnel selected for operating and maintaining this facility. Includes Facility Manager, building operators, maintenance staff, security staff, and technical specialists as required.

.2 Trainees will be available for training during later stages of construction for purposes of familiarization with systems.

1.3 INSTRUCTORS

.1 Departmental Representative will provide:

.1 Descriptions of systems.

.2 Instruction on design philosophy, design criteria, and design intent.

.2 Contractor and certified factory-trained manufacturers' personnel: to provide instruction on the following:

.1 Start-Up, operation, shut-down of equipment, components and systems.

.2 Control features, reasons for, results of, implications on associated systems of, adjustment of set points of control and safety devices.

.3 Instructions on servicing, maintenance and adjustment of systems, equipment and components.

.3 Contractor and equipment manufacturer to provide instruction on:

.1 Start-up, operation, maintenance and shut-down of equipment they have certified installation, started up and carried out PV tests.

1.4 TRAINING OBJECTIVES

.1 Training to be detailed and duration to ensure:

.1 Safe, reliable, cost-effective, energy-efficient operation of systems in normal and emergency modes under all conditions.

.2 Effective on-going inspection, measurements of system performance.

.3 Proper preventive maintenance, diagnosis and trouble-shooting.

.4 Ability to update documentation.

.5 Ability to operate equipment and systems under emergency conditions until appropriate qualified assistance arrives.

1.5 TRAINING MATERIALS

.1 Instructors to be responsible for content and quality.

.2 Training materials to include:

.1 "As-Built" Contract Documents.

.2 Operating Manual.

.3 Maintenance Manual.

.4 Management Manual.

.5 TAB and PV Reports.

.3 Project Manager, Commissioning Manager and Facility Manager will review training manuals.

.4 Training materials to be in a format that permits future training procedures to same degree of detail.

.5 Supplement training materials:

.1 Transparencies for overhead projectors.

.2 Multimedia presentations.

.3 Manufacturer's training videos.

.4 Equipment models.

1.6 SCHEDULING

.1 Include in Commissioning Schedule time for training.

.2 Deliver training during regular working hours, training sessions to be 3 hours in length.

.3 Training to be completed prior to acceptance of facility.

1.7 RESPONSIBILITIES

.1 Be responsible for:

.1 Implementation of training activities,

.2 Coordination among instructors,

.3 Quality of training, training materials,

.2 Departmental Representative will evaluate training and materials.

.3 Upon completion of training, provide written report, signed by Instructors, witnessed by Departmental Representative.

1.8 TRAINING CONTENT

.1 Training to include demonstrations by Instructors using the installed equipment and systems.

.2 Content includes:

.1 Review of facility and occupancy profile.

.2 Functional requirements.

.3 System philosophy, limitations of systems and emergency procedures.

.4 Review of system layout, equipment, components and controls.

.5 Equipment and system start-up, operation, monitoring, servicing, maintenance and shut-down procedures.

.6 System operating sequences, including step-by-step directions for starting up, shut-down, operation of valves, dampers, switches, adjustment of control settings and emergency procedures.

.7 Maintenance and servicing.

.8 Trouble-shooting diagnosis.

.9 Inter-Action among systems during integrated operation.

.10 Review of O&M documentation.

.3 Provide specialized training as specified in relevant Technical Sections of the construction specifications.

Part 2 Products

2.1 NOT USED

Part 3 Execution

3.1 NOT USED

END OF SECTION

Part 1 General

1.1 SUMMARY

.1 Section Includes:

.1 This section is limited to portions of the Building Management Manual (BMM) provided to Departmental Representative by Contractor.

.2 Acronyms:

.1 BMM - Building Management Manual.

.2 Cx - Commissioning.

.3 HVAC - Heating, Ventilation and Air Conditioning.

.4 PI - Product Information.

.5 PV - Performance Verification.

.6 TAB - Testing, Adjusting and Balancing.

.7 WHMIS - Workplace Hazardous Materials Information System.

1.2 GENERAL REQUIREMENTS

.1 Standard letter size paper 216 mm x 279 mm.

.2 Methodology used to facilitate updating.

.3 Drawings, diagrams and schematics to be professionally developed.

.4 Electronic copy of data to be in a format accepted and approved by Departmental Representative.

1.3 APPROVALS

.1 Prior to commencement, co-ordinate requirements for preparation, submission and approval with Departmental Representative.

1.4 GENERAL INFORMATION

.1 Provide Departmental Representative the following for insertion into appropriate Part and Section of BMM:

.1 Complete list of names, addresses, telephone and fax numbers of contractor, sub-contractors that participated in delivery of project - as indicated in Section 1.2 of BMM.

.2 Summary of architectural, structural, fire protection, mechanical and electrical systems installed and commissioned - as indicated in Section 1.4 of BMM.

.1 Including sequence of operation as finalized after commissioning is complete as indicated in Section 2.0 of BMM.

.3 Description of building operation under conditions of heightened security and emergencies as indicated in Section 2.0 of BMM.

.4 System, equipment and components Maintenance Management System (MMS) identification - Section 2.1 of BMM..

.5 Information on operation and maintenance of architectural systems and equipment installed and commissioned - Section 2.0 of BMM.

.6 Information on operation and maintenance of fire protection and life safety systems and equipment installed and commissioned - Section 2.0 of BMM.

.7 Information on operation and maintenance of mechanical systems and equipment installed and commissioned - Section 2.0 of BMM.

.8 Operating and maintenance manual - Section 3.2 of BMM.

.9 Final commissioning plan as actually implemented.

.10 Completed commissioning checklists.

.11 Commissioning test procedures employed.

.12 Completed Product Information (PI) and Performance Verification (PV) report forms, approved and accepted by Departmental Representative.

.13 Commissioning reports.

1.5 CONTENTS OF OPERATING AND MAINTENANCE MANUAL

.1 For detailed requirements refer to Section 01 78 00- Closeout Submittals.

.2 Departmental Representative to review and approve format and organization within 12 weeks of award of contract.

.3 Include original manufactures brochures and written information on products and equipment installed on this project.

.4 Record and organize for easy access and retrieval of information contained in BMM.

.5 Include completed PI report forms, data and information from other sources as required.

.6 Inventory directory relating to information on installed systems, equipment and components.

.7 Approved project shop-drawings, product and maintenance data.

.8 Manufacturer's data and recommendations relating: manufacturing process, installation, commissioning, start-up, O&M, shutdown and training materials.

.9 Inventory and location of spare parts, special tools and maintenance materials.

.10 Warranty information.

.11 Inspection certificates with expiration dates, which require on-going re-certification inspections.

.12 Maintenance program supporting information including:

.1 Recommended maintenance procedures and schedule.

.2 Information to removal and replacement of equipment including, required equipment, points of lift and means of entry and egress.

1.6 LIFE SAFETY COMPLIANCE (LSC) MANUAL

.1 Samples of LSC Manual will be available from Departmental Representative.

.2 Content of Manual:

.1 All possible Emergency situations modes including: presence of fire and smoke, power failure, lose of water or pressure, chemical spills and refrigerant release.

.2 Failure of elevators and escalators.

.3 HVAC emergencies and fuel supply failures.

.4 Intrusion and security breach.

.5 Emergency provisions for natural disasters, bomb threats and other disruptive situations.

.6 Dedicated emergency generators for high security projects, medical facilities and computer systems.

.7 Emergency control procedures for fire, power and major equipment failure.

.8 Emergency contacts and numbers.

.9 Manual to be readily available and comprehensible to non- technical readers.

1.7 SUPPORTING DOCUMENTATION FOR INSERTION INTO SUPPORTING APPENDICES

.1 Provide Departmental Representative supporting documentation relating to installed equipment and system, including:

.1 General:

.1 Finalized commissioning plan.

.2 WHMIS information manual.

.3 Approved "as-built" drawings and specifications.

.4 Procedures used during commissioning.

.5 Cross-Reference to specification sections.

.2 Architectural and structural:

.1 Inspection certificates, construction permits.

.2 Roof anchor log books.

.3 PV reports.

.3 Fire prevention, suppression and protection:

.1 Test reports.

.2 Smoke test reports.

.3 PV reports.

.4 Mechanical:

.1 Installation permits, inspection certificates.

.2 Piping pressure test certificates.

.3 Ducting leakage test reports.

.4 TAB and PV reports.

.5 Charts of valves and steam traps.

.6 Copies of posted instructions.

.5 Electrical:

.1 Installation permits, inspection certificates.

.2 TAB and PV reports.

.3 Electrical work log book.

.4 Charts and schedules.

.5 Locations of cables and components.

.6 Copies of posted instructions.

.2 Assist Departmental Representative with preparation of BMM.

1.8 LANGUAGE

.1 English and French Language to be in separate binders.

1.9 IDENTIFICATION OF FACILITY

.1 When submitting information to Departmental Representative for incorporation into BMM, use following system for identification of documentation:

1.10 USE OF CURRENT TECHNOLOGY

.1 Use current technology for production of documentation. Emphasis on ease of accessibility at all times, maintain in up-to-date state, compatibility with user's requirements.

.2 Obtain Departmental Representative's approval before starting Work.

Part 2 Products

2.1 NOT USED

Part 3 Execution

3.1 NOT USED

END OF SECTION

PART 1 – GENERAL

1.1 RELATED REQUIREMENTS

.1 Section 08 11 00 – Metal doors and frame.

.2 Section 08 14 16 – Flush wood doors.

.3 Section 08 71 00 – Door hardware.

.4 Section 09 21 99 – Partition for minor work.

.5 Section 09 51 13 – Acoustical ceiling for minor works

.6 Section 09 53 00.01 – Acoustical suspension

.7 Section 10 22 19 – Post and panel de mountable partitions

1.2 REFERENCES

.1 CSA International
  .1 CSA S350-M1980(R2003), Code of Practice for Safety in Demolition of Structures.

.2 U.S. Environmental Protection Agency (EPA)/Office of Water
  .1 EPA 832/R-92-005, Storm Water Management for Construction Activities: Developing Pollution Prevention Plans and Best Management Practices.

1.3 ACTION AND INFORMATIONAL SUBMITTALS

.1 Submit in accordance with Section 01 33 00 - Submittal Procedures and 01 74 21 - Construction/Demolition Waste Management Disposal.

.2 Submit demolition drawings:
  .1 Submit for review and approval by Departmental Representative shoring and underpinning drawings stamped and signed by professional engineer registered or licensed in the Province of Quebec Canada, showing proposed method.

1.4 SITE CONDITIONS

.1 Review "Designated Substance Report" and take precautions to protect environment.

.2 If material resembling spray or trowel-applied asbestos or other designated substance listed as hazardous be encountered, stop work, take preventative measures, and notify Departmental Representative immediately.
  .1 Proceed only after receipt of written instructions have been received from Departmental Representative.

.3 Notify Departmental Representative before disrupting building access or services.

PART 2 – PRODUCTS

2.1 NOT USED

.1 Not used.

PART 3 – EXECUTION

3.1 EXAMINATION

.1 Inspect site with Departmental Representative and verify extent and location of items designated for removal, disposal, alternative disposal, recycling, salvage and items to remain.

.2 Locate and protect utilities. Preserve active utilities traversing site in operating condition.

.3 Notify and obtain approval of utility companies before starting demolition.

.4 Disconnect, cap, plug or divert, as required, existing public utilities within the property where they interfere with the execution of the work, in conformity with the requirements of the authorities having jurisdiction. Mark the location of these and previously capped or plugged services on the site and indicate location (horizontal and vertical) on the record drawings. Support, shore up and maintain pipes and conduits encountered.

- .1 Immediately notify Departmental Representative and utility company concerned in case of damage to any utility or service, designated to remain in place.
- .2 Immediately notify the Departmental Representative should uncharted utility or service be encountered, and await instruction in writing regarding remedial action.

3.2 PREPARATION

.1 Protection of In-Place Conditions:

- .1 Prevent movement, settlement, or damage to adjacent structures, utilities, and parts of building to remain in place. Provide bracing and shoring required.
- .2 Keep noise, dust, and inconvenience to occupants to minimum.
- .3 Protect building systems, services and equipment.
- .4 Provide temporary dust screens, covers, railings, supports and other protection as required.
- .5 Do Work in accordance with Section 01 35 29.06 - Health and Safety Requirements.

.2 Demolition/Removal:

- .1 Remove items as indicated.
- .2 Removal of Pavements, Curbs and Gutters:
  - .1 Square up adjacent surfaces to remain in place by saw cutting or other method approved by Departmental Representative.
  - .2 Protect adjacent joints and load transfer devices.
- .3 Remove parts of existing building to permit new construction.
- .4 Trim edges of partially demolished building elements to tolerances as defined by Departmental Representative to suit future use.

3.3 CLEANING

.1 Progress Cleaning: clean in accordance with Section 01 74 11 - Cleaning.
  .1 Leave Work area clean at end of each day.

.2 Final Cleaning: upon completion remove surplus materials, rubbish, tools and equipment in accordance with Section 01 74 11 - Cleaning.

.3 Refer to demolition drawings and specifications for items to be salvaged for reuse.

.4 Waste Management: separate waste materials for reuse and recycling in accordance with Section 01 74 21 - Construction/Demolition Waste Management and Disposal.

END OF SECTION

PART 1 – GENERAL

1.1 RELATED REQUIREMENTS

.1 Section 06 40 00 – Architectural woodwork.

1.2 REFERENCES

.1 CSA International
- .1 CSA B111-1974(R2003), Wire Nails, Spikes and Staples.
- .2 CSA O121-08, Douglas Fir Plywood.
- .3 CSA O141-05(R2009), Softwood Lumber.
- .4 CSA O151-09, Canadian Softwood Plywood.
- .5 CAN/CSA-O325.0-07, Construction Sheathing.
- .6 CAN/CSA-Z809-08, Sustainable Forest Management.

.2 Forest Stewardship Council (FSC)
- .1 FSC-STD-01-001-2004, FSC Principle and Criteria for Forest Stewardship.

.3 National Lumber Grades Authority (NLGA)
- .1 Standard Grading Rules for Canadian Lumber 2010.

.4 Sustainable Forestry Initiative (SFI)
- .1 SFI-2010-2014 Standard.

1.3 ACTION AND INFORMATIONAL SUBMITTALS

.1 Submit in accordance with Section 01 33 00 - Submittal Procedures.

.2 Product Data:
- .1 Submit manufacturer's instructions, printed product literature and data sheets for rough carpentry work and include product characteristics, performance criteria, physical size, finish and limitations.

1.4 MAINTENANCE MATERIALS SUBMITTALS

.1 Extra Stock Materials:
- .1 Provide electrical equipment backboards for mounting electrical equipment as indicated. Use 19 mm thick plywood on 19 x 38 mm furring around spacing, perimeter and at maximum 300 mm intermediate

1.5 QUALITY ASSURANCE

.1 Lumber identification: by grade stamp of an agency certified by Canadian Lumber Standards Accreditation Board.

.2 Plywood identification: by grade mark in accordance with applicable CSA standards.

.3 Plywood, OSB and wood based composite panel construction sheathing identification: by grademark in accordance with applicable CSA standards.

.4 Sustainable Standards Certification:
- .1 Certified Wood: submit listing of wood products and materials used in accordance with CAN/CSA-Z809 or FSC or SFI.

1.6 DELIVERY, STORAGE AND HANDLING

.1 Deliver, store and handle materials in accordance with Section 01 61 00 - Common Product Requirements and with manufacturer's written instructions.

.2 Delivery and Acceptance Requirements: deliver materials to site in original factory packaging, labelled with manufacturer's name and address.

.3 Storage and Handling Requirements:
- .1 Store materials indoors in dry location and in accordance with manufacturer's recommendations in clean, dry, well-ventilated area.
- .2 Store and protect wood from nicks, scratches, and blemishes.
- .3 Replace defective or damaged materials with new.

PART 2– PRODUCTS

2.1 MATERIALS

.1 Lumber: unless specified otherwise, softwood, S4S, moisture content 19% or less in accordance with following standards:
- .1 CAN/CSA-O141.
- .2 NLGA Standard Grading Rules for Canadian Lumber.
- .3 CAN/CSA-Z809 or FSC or SFI certified.

.2 Furring, blocking, nailing strips, grounds, rough bucks, [cants,] curbs, fascia backing and sleepers:
- .1 S2S is acceptable.
- .2 Board sizes: "Standard" or better grade.
- .3 Dimension sizes: "Standard" light framing or better grade.
- .4 Post and timbers sizes: "Standard" or better grade.

.3 Panel Materials:
- .1 Douglas fir plywood (DFP): to CSA O121, standard construction.
  - .1 Urea-formaldehyde free.
- .2 Canadian softwood plywood (CSP): to CSA O151, standard construction.
  - .1 Urea-formaldehyde free.
- .3 Plywood, OSB and wood based composite panels: to CAN/CSA-O325.
  - .1 Urea-formaldehyde free.

2.2 ACCESSORIES

.1 Fasteners: to CAN/CSA-G164, for interior work.

.2 Nails, spikes and staples: to CSA B111.

.3 Bolts: 12.5 mm diameter unless indicated otherwise, complete with nuts and washers.

PART 3– EXECUTION

3.1 EXAMINATION

.1 Verification of Conditions: verify conditions of substrates previously installed under other Sections or Contracts are acceptable for rough carpentry installation in accordance with manufacturer's written instructions.
- .1 Visually inspect substrate in presence of Departmental Representative.
- .2 Inform Departmental Representative of unacceptable conditions immediately upon discovery.
- .3 Proceed with installation only after unacceptable conditions have been remedied and after receipt of written approval to proceed from Departmental Representative.

3.2 PREPARATION

.1 Treat surfaces of material that will be exposed to humidity with wood preservative, before installation.

.2 Apply preservative by dipping, or by brush to completely saturate and maintain wet film on surface for minimum 3 minute soak on lumber and 1 minute soak on plywood.

.3 Re-treat surfaces exposed by cutting, trimming or boring with liberal brush application of preservative before installation.

3.3 INSTALLATION

.1 Comply with requirements of NBC, supplemented by the following paragraphs.

.2 Install furring and blocking as required to space-out and support casework, cabinets, wall and ceiling finishes, facings, fascia, soffit, siding and other work as required.

.3 Provide and install all nail backing necessary for installing equipment and furniture on interior partitions. Provide the necessary nail backing according to the type of equipment, the use of the later or according to the weight of the furniture to be installed.

.4 Align and plumb faces of furring and blocking to tolerance of 1:600.

.5 Install rough bucks, nailers and linings to rough openings as required to provide backing for frames and other work.

.6 Use caution when working with particle board. Use dust collectors and high quality respirator masks.

.7 Assemble, anchor, fasten and brace all components to ensure strength and rigidity.

.8 If necessary, droll holes so that the bolt heads do not protrude.

3.4 CLEANING

.1 Progress Cleaning: clean in accordance with Section 01 74 11 - Cleaning.
- .1 Leave Work area clean at end of each day.

.2 Final Cleaning: upon completion remove surplus materials, rubbish, tools and equipment in accordance with Section 01 74 11 - Cleaning.

.3 Waste Management: separate waste materials for reuse and recycling in accordance with Section 01 74 21 - Construction/Demolition Waste Management and Disposal.

.1 Remove recycling containers and bins from site and dispose of materials at appropriate facility.

END OF SECTION

PART 1 – GENERAL

1.1 RELATED REQUIREMENTS

.1 Section 06 08 99 – Rough carpentry for minor works.

1.2 REFERENCES

.1 American National Standards Institute (ANSI)
- .1 ANSI A208.1-09, Particleboard.
- .2 ANSI A208.2-09, Medium Density Fiberboard (MDF) for Interior Applications.
- .3 ANSI/HPVA HP-1-10, Standard for Hardwood and Decorative Plywood.

.2 ASTM International
- .1 ASTM E 1333-10, Standard Test Method for Determining Formaldehyde Concentrations in Air and Emission Rates From Wood Products Using a Large Chamber.
- .2 ASTM D 2832-92(R2011), Standard Guide for Determining Volatile and Nonvolatile Content of Paint and Related Coatings.
- .3 ASTM D 5116-10, Standard Guide For Small-Scale Environmental Chamber Determinations of Organic Emissions From Indoor Materials/Products.

.3 Architectural Woodwork Manufacturers Association of Canada (AWMAC) and Architectural Woodwork Institute (AWI)
- .1 Architectural Woodwork Quality Standards Illustrated, 8th edition, Version 1.0 (2009).

.4 Canadian General Standards Board (CGSB)
- .1 CAN/CGSB-71.20-M88, Adhesive, Contact, Brushable.

.5 CSA International
- .1 CSA B111-74(R2003), Wire Nails, Spikes and Staples.
- .2 CSA O112.10-08, Evaluation of Adhesives for Structural Wood Products (Limited Moisture Exposure).
- .3 CSA O121-08, Douglas Fir Plywood.
- .4 CSA O141-05(R2009), Softwood Lumber.
- .5 CSA O151-09, Canadian Softwood Plywood.
- .6 CSA O153-M1980(R2008), Poplar Plywood.
- .7 CAN/CSA-Z809-08, Sustainable Forest Management.

.6 Forest Stewardship Council (FSC)
- .1 FSC-STD-01-001-2004, FSC Principle and Criteria for Forest Stewardship.

.7 Green Seal Environmental Standards (GS)
- .1 GS-11-11, Paints and Coatings.
- .2 GS-36-11, Commercial Adhesives.

.8 Health Canada/Workplace Hazardous Materials Information System (WHMIS)
- .1 Material Safety Data Sheets (MSDS).

.9 International Organization for Standardization (ISO)
- .1 ISO 14040-2006, Environmental Management-Life Cycle Assessment - Principles and Framework.
- .2 ISO 14041-98, Environmental Management-Life Cycle Assessment - Goal and Scope Definition and Inventory Analysis.

.10 National Electrical Manufacturers Association (NEMA)
.1 ANSI/NEMA LD-3-05, High-Pressure Decorative Laminates (HPDL).

.11 National Hardwood Lumber Association (NHLA)
.1 Rules for the Measurement and Inspection of Hardwood and Cypress 2011.

.12 National Lumber Grades Authority (NLGA)
.1 Standard Grading Rules for Canadian Lumber 2010.

.13 South Coast Air Quality Management District (SCAQMD), California State, Regulation XI. Source Specific Standards
.1 SCAQMD Rule 1113-A2011, Architectural Coatings.
.2 SCAQMD Rule 1168-A2005, Adhesives and Sealants Applications.

.14 Sustainable Forestry Initiative (SFI)
.1 SFI-2010-2014 Standard.

1.3 ACTION AND INFORMATIONAL SUBMITTALS

.1 Submit in accordance with Section 01 33 00 - Submittal Procedures.

.2 Product Data:
.1 Submit manufacturer's instructions, printed product literature and data sheets for architectural woodwork and include product characteristics, performance criteria, physical size, finish and limitations.
.2 Submit copies of WHMIS MSDS in accordance with Section 01 35 29.06 - Health and Safety Requirements and 01 35 43 - Environmental Procedures.

.3 Shop Drawings:
.1 Submit drawings stamped and signed by professional engineer registered or licensed in Province Quebec, Canada.
.2 Indicate details of construction, profiles, jointing, fastening and other related details.
.1 Scales: profiles full size, details half full size.
.3 Indicate materials, thicknesses, finishes and hardware.
.4 Indicate locations of service outlets in casework, typical and special installation conditions, and connections, attachments, anchorage and location of exposed fastenings.

.4 Samples:
.1 Submit for review and acceptance of each unit.
.2 Submit duplicate samples : sample size 300mm x 300 mm.
.3 Submit duplicate samples of laminated plastic for colour selection.
.4 Submit duplicate samples of laminated plastic joints, edging, cutouts and postformed profiles.

.5 Certifications: submit certificates signed by manufacturer certifying that materials comply with specified performance characteristics and physical properties.

1.4 QUALITY ASSURANCE

.1 Lumber by grade stamp of an agency certified by Canadian Lumber Standards Accreditation Board.

.2 Plywood, particleboard, OSB and wood based composite panels to CSA and ANSI standards.

.3 Mock-ups:

.1 Construct mock-ups in accordance with Section 01 45 00 - Quality Control.
  .1 Shop prepare one base cabinet unit, wall cabinet, counter top, shelving unit, complete with hardware and shop applied finishes, and install where directed by Departmental Representative.
  .2 When accepted, mock-up will demonstrate minimum standard for Work.
  .3 Do not proceed with work prior to receipt of written acceptance of mock-up by Departmental Representative.
  .4 Mock-up may remain as part of finished work.

1.5 DELIVERY, STORAGE AND HANDLING

.1 Deliver, store and handle materials in accordance with Section 01 61 00 - Common Product Requirements and with manufacturer's written instructions.

.2 Delivery and Acceptance Requirements: deliver materials to site in original factory packaging, labelled with manufacturer's name and address.
  .1 Protect millwork against dampness and damage during and after delivery.
  .2 Store millwork in ventilated areas, protected from extreme changes of temperature or humidity.

.3 Storage and Handling Requirements:
  .1 Store materials off ground, indoors, in dry location and in accordance with manufacturer's recommendations in clean, dry, well-ventilated area.
  .2 Store and protect architectural woodwork from [nicks, scratches, and blemishes.
  .3 Replace defective or damaged materials with new.

.4 Packaging Waste Management: remove for reuse and return by manufacturer of pallets, crates, padding, and packaging materials as specified in Construction Waste Management Plan in accordance with Section 01 74 21 - Construction/Demolition Waste Management and Disposal.

1.6 WARRANTIES

.1 Provide written warranty issued on behalf of the owner against warpage, delamination or shift of the architectural woodwork for a period of 24 months exceeding the warranty specified in the contract, for a total of 3 years.

1.7 REINFORCEMENT AND RETOUCHING

.1 Include all required but unidentified fasteners and reinforcements to ensure the strength of the furniture.

.2 All necessary retouching to remove joints or correct the surface will be carried out simultaneously, as well as for mechanical and electrical fitting.

1.8 COORDINATION

.1 Coordinate the position of all reinforcements (nail backings) required for the work.

.2 Prior to manufacturing the concerned furniture, coordinate with the Departmental Representative the mechanical, electrical, gas and other whose dimension could influence the furniture dimension.

PART 2 – PRODUCTS

2.1 MATERIALS

.1 Softwood lumber: unless specified otherwise, S4S, moisture content 19% or less in accordance with following standards:
- .1 CSA O141.
- .2 CAN/CSA-Z809 or FSC or SFI certified.
- .3 NLGA Standard Grading Rules for Canadian Lumber.
- .4 AWMAC premium grade, moisture content as specified.

.2 Machine stress-rated lumber is acceptable for all purposes.

.3 Douglas fir plywood (DFP): to CSA O121, standard construction, CAN/CSA-Z809 or FSC or SFI certified.
- .1 Plywood resin to contain no added urea-formaldehyde.

.4 Canadian softwood plywood (CSP): to CSA O151, standard construction, CAN/CSA-Z809 or FSC or SFI certified.
- .1 Plywood resin to contain no added urea-formaldehyde.

.5 Hardwood plywood: to ANSI/HPVA HP-1, CAN/CSA-Z809 or FSC or SFI certified.
- .1 Plywood resin to contain no added urea-formaldehyde.

.6 Interior mat-formed wood particleboard: to ANSI/NPA A208.1, CAN/CSA-Z809 or FSC or SFI certified.
- .1 Particleboard resin to contain no added urea-formaldehyde.

.7 Fibreboard must contain less than 10% roundwood by weight, using weighted average over three month period at manufacturing locations.
- .1 Fibreboard resin to contain no added urea-formaldehyde.
- .2 CAN/CSA-Z809 or FSC or SFI certified.

.8 MDF (medium density fibreboard) core: to ANSI A208.2, density 769 kg/mý, CAN/CSA-Z809 or FSC or SFI certified.
- .1 Medium density fibreboard performance requirements to: ANSI A208.2.
- .2 MDF resin to contain no added urea-formaldehyde.

.9 Laminated plastic for flatwork: to NEMA LD3, Grade VGL, Type T4, 1.15 mm thick; based on printed pattern, color indicated on plans.
- .1 Coloration and approved productes for laminated plastic:
  - .1 PS1: White laminated: NEVAMAR, Bone White, S7032T.
  - .2 PS2: Grey laminated: NEVAMAR, Iconic Maple, WM0047.

.10 Thermofused Melamine: to NEMA LD3 Grade VG, for vertical surfaces.
- .1 High wear resistant thermofused melamine: equal or exceed 400 cycles (Minimum standard for HPL abrasion test).

.11 Nails and staples: to CSA B111.

.12 Wood screws: steel, type and size to suit application.

.13 Splines: metal.

.14 Sealant: in accordance with Section 07 92 00 - Joint Sealants.

.15 Laminated plastic adhesive:
- .1 Adhesive: contact adhesive to CAN/CGSB-71.20.
- .2 Adhesives: VOC limit 250 g/L maximum.
- .3 Product without urea-formaldehyde.

2.2 MANUFACTURED UNITS

.1 Casework:
- .1 Fabricate caseworks to AWMAC premium quality grade.
- .2 Casework frame (back, sides bottom and top, exposed and not apparent framework including edges):
  - .1 Particleboard:16 mm thick with thermofused melamine 2 sides including edges, refer to details on the drawings.
- .3 Shelving:
  - .1 Particleboard, laminated with thermofused melamine 2 sides.
  - .2 Edge banding: Matching colour in 3 mm PVC.
- .4 Furring, spacers, nailing strip, sub-frame and support:
  - .1 Elements with S2S finish are acceptable.
  - .2 Boards: standard or higher quality.
  - .3 Lumber: ''Lightweight'', ''Standard'' or higher category.
  - .4 Product free of urea-formaldehyde.

.2 Drawers:
- .1 Fabricate drawers to AWMAC premium grade supplemented as follows:
- .2 Sides and Backs.
  - .1 Particleboard:16 mm thick with laminate surfacing as indicated on the drawings.
  - .2 Thermofused melamine: 2 sides including edges.
- .3 Bottoms:
  - .1 Particleboard:16 mm thick with laminate surfacing as indicated on the drawings.
  - .2 Thermofused melamine: 2 sides including edges.
- .4 Fronts:
  - .1 Poplar plywood: Douglas-fir plywood, square edges, 16mm thick.
  - .2 Plastic laminate 2 side including edges.

.3 Casework Doors:
- .1 Fabricate doors to AWMAC premium grade supplemented as follows:
- .2 Poplar plywood: Douglas-fir plywood, square edges, 16mm thick.
- .3 Plastic laminate 2 side including edges.

.4 Countertop and backsplash:
- .1 Poplar plywood: Douglas-fir plywood, square edges, 2x16mm thick.
- .2 Plastic laminate 2 side including edges.

.5 Separating panels and cabinet
- .1 Poplar plywood: Douglas-fir plywood, square edges, 16mm thick.
- .2 Plastic laminate 2 side including edges.

2.3 FABRICATION

.1 Set nails and countersink screws apply stained wood filler to indentations, sand smooth and leave ready to receive finish.

.2 Shop install cabinet hardware for doors, shelves and drawers. Recess shelf standards unless noted otherwise.

.3 Shelving to cabinetwork to be adjustable unless otherwise noted.

.4 Provide cutouts for plumbing fixtures, inserts, appliances, outlet boxes and other fixtures.

.5 Shop assemble work for delivery to site in size easily handled and to ensure passage through building openings.

.6 Obtain governing dimensions before fabricating items which are to accommodate or abut appliances, equipment and other materials.

.7 Ensure adjacent parts of continuous laminate work match in colour and pattern.

.8 Veneer laminated plastic to core material in accordance with adhesive manufacturer's instructions. Ensure core and laminate profiles coincide to provide continuous support and bond over entire surface. Use continuous lengths up to 3000 mm. Keep joints 600 mm from sink cutouts.

.9 Form shaped profiles and bends as indicated, using postforming grade laminate to laminate manufacturer's instructions.

.10 Use straight self-edging laminate strip for flatwork to cover exposed edge of core material. Chamfer exposed edges uniformly at approximately 20 degrees. Do not mitre laminate edges.

.11 Apply laminate backing sheet to reverse side of core of plastic laminate work.

.12 Apply laminated plastic liner sheet to interior of cabinetry, where indicated.

.13 Provide a pair of concealed hinges to all cabinet doors.

.14 Provide a lock for all cabinet door with a cam lock on the right door and a magnetic latch and a bent latch on the left door,

.15 Provide a handle for all doors, drawers and sliding shelves.

.16 Provide slides to all drawers and sliding shelves on each sides.

2.4 HARDWARE

.1 Handles:
- .1 Type 1: Surface handles for cabinet doors and drawers: stainless steel handles. To be installed horizontally or vertically. Refer to indications on plans.
  - .1 Brushed stainless steel handle in accordance with CAN/CGSB-69.25-M90.
  - .2 Approved product: model 3487.181 and 3487-143, finish 170, length indicated on plans, distributed by Richelieu Hardware or equivalent product.

.2 Hidden hinges:
- .1 Hinges: generally, for doors with semi-applied or applied with nickel-plated steel casing, opening at +110º and automatic closing, zamac nickel-plated mounting plate, adjustable in height. Provide 2 hinges for 915mm high door, 3 hinges for 1220mm high doors and 4 hinges for full height door.
  - .1 Approved products: Model 75T175180 Clip Top, Straight Flange 175H310180, Blumotion damper 973A050001 and Flat head screws FCZ658PR, distributed by Richelieu Hardware or equivalent product.

.3 Cam lock:
- .1 Doors and drawers:

.1 Approved product: 1202, strike 20-21-31, distributed by Richelieu Hardware Ltd or equivalent product. Barrel provided by the establishment and installed by the contractor.
.2 Provide 1 key for all project furniture.
.3 The establishment will validate the position of the locks.

.4 Bumper:
.1 Cabinet door bumper: clear rubber.
.1 Approved product: Model MP531211 distributed by Richelieu Hardware Ltd or equivalent product.

.5 Drawer slides:
.1 Complies with CAN/CGSB-69.25-M90.
.1 File drawers:
.1 Approved product: Richelieu/Accuride series 4032 or 4034 or equivalent approved.
.2 Other drawers:
.1 Approved product: Richelieu/Accurid 3832 series or equivalent approved.

.6 Adjustable shelf and recessed shelf support strip inside cabinets:
.1 Shelf support system in general: metal mounting brackets and supports (4 brackets per shelf) made of metal, for length refer to plans.
.1 Approved products: 2552 G zinc finish MP531211 distributed by Richelieu Hardware Ltd or equivalent product.

.7 Gommet:
.1 Approved product: A-60.09 10-90 Passe-fils :
.1 Acceptable product: A-60.0910-90 distributed by Richelieu Hardware Ltd or equivalent product.

PART 3 – EXECUTION

3.1 EXAMINATION

.1 Verification of Conditions: verify conditions of substrates previously installed under other Sections or Contracts are acceptable for architectural woodwork installation in accordance with manufacturer's instructions.
.1 Visually inspect substrate in presence of Departmental Representative.
.2 Inform Departmental Representative of unacceptable conditions immediately upon discovery.
.3 Proceed with installation only after unacceptable conditions have been remedied [and after receipt of written approval to proceed from Departmental Representative.

3.2 INSTALLATION

.1 Do architectural woodwork to Quality Standards of AWMAC.

.2 Install prefinished millwork at locations shown on drawings.
.1 Position accurately, level, plumb straight.

.3 Fasten and anchor millwork securely.
.1 Supply and install heavy duty fixture attachments for wall mounted cabinets.

.4 Use draw bolts in countertop joints.

.5 Scribe and cut as required to fit abutting walls and to fit properly into recesses and to accommodate piping, columns, fixtures, outlets or other projecting, intersecting or penetrating objects.

.6 At junction of plastic laminate counter back splash and adjacent wall finish, apply small bead of sealant in accordance with Section 07 92 00 - Joint Sealants.

.7 Fit hardware accurately and securely in accordance with manufacturer's written instructions.

.8 Install hardware, at location indicated.

.9 Site apply laminated plastic to units as indicated.
- .1 Adhere laminated plastic over entire surface.
- .2 Make corners with hairline joints.
- .3 Use full sized laminate sheets.
- .4 Make joints only where indicated by Departmental Representative.
- .5 Slightly bevel arises.

.10 For site application, offset joints in plastic laminate facing from joints in core.

3.3 CLEANING

.1 Progress Cleaning: clean in accordance with Section 01 74 11 - Cleaning.
- .1 Leave Work area clean at end of each day.

.2 Final Cleaning: upon completion remove surplus materials, rubbish, tools and equipment in accordance with Section 01 74 11 - Cleaning.
- .1 Clean millwork and cabinet work, inside cupboards and drawers, and outside surfaces.
- .2 Remove excess glue from surfaces.

.3 Waste Management: separate waste materials for reuse and recycling in accordance with Section 01 74 21 - Construction/Demolition Waste Management and Disposal.
- .1 Remove recycling containers and bins from site and dispose of materials at appropriate facility.

3.4 PROTECTION

.1 Protect millwork and cabinet work from damage until final inspection.

.2 Protect installed products and components from damage during construction.

.3 Repair damage to adjacent materials caused by architectural woodwork installation.

END OF SECTION

PART 1 – GENERAL

1.1 REFERENCES

.1 Health Canada/Workplace Hazardous Materials Information System (WHMIS)
  .1 Material Safety Data Sheets (MSDS).

.2 Underwriter's Laboratories of Canada (ULC)
  .1 ULC-S115-1995, Fire Tests of Fire stop Systems.

1.2 DEFINITIONS

.1 Fire Stop Material: device intended to close off opening or penetration during fire or materials that fill openings in wall or floor assembly where penetration is by cables, cable trays, conduits, ducts and pipes and poke-through termination devices, including electrical outlet boxes along with their means of support through wall or floor openings.

.2 Single Component Fire Stop System: fire stop material that has Listed Systems Design and is used individually without use of high temperature insulation or other materials to create fire stop system.

.3 Multiple Component Fire Stop System: exact group of fire stop materials that are identified within Listed Systems Design to create on site fire stop system.

.4 Tightly Fitted; (ref: NBC Part 3.1.9.1.1 and 9.10.9.6.1): penetrating items that are cast in place in buildings of noncombustible construction or have "0" annular space in buildings of combustible construction.
  .1 Words "tightly fitted" should ensure that integrity of fire separation is such that it prevents passage of smoke and hot gases to unexposed side of fire separation.

1.3 ACTION AND INFORMATIONAL SUBMITTALS

.1 Provide submittals in accordance with Section 01 33 00 - Submittal Procedures.

.2 Product Data:
  .1 Submit manufacturer's printed product literature, specifications and datasheet and include product characteristics, performance criteria, physical size, finish and limitations.
  .2 Submit copies of WHMIS MSDS - Material Safety Data Sheets in accordance with Section 02 81 01 - Hazardous Materials.

.3 Shop Drawings:
  .1 Submit shop drawings to show location, proposed material, reinforcement, anchorage, fastenings and method of installation.
  .2 Construction details should accurately reflect actual job conditions.

.4 Samples:
  .1 Submit duplicate 300 x 300 mm samples showing actual fire stop material proposed for project.

.5 Quality assurance submittals: submit following in accordance with Section 01 45 00 - Quality Control.
  .1 Test reports: in accordance with CAN-ULC-S101 for fire endurance and CAN-ULC-S102 for surface burning characteristics.

.1 Submit certified test reports from approved independent testing laboratories, indicating compliance of applied fire stopping with specifications for specified performance characteristics and physical properties.

.2 Certificates: submit certificates signed by manufacturer certifying that materials comply with specified performance characteristics and physical properties.

.3 Manufacturer's Instructions: submit manufacturer's installation instructions and special handling criteria, installation sequence, cleaning procedures.

.4 Manufacturer's Field Reports: submit to manufacturer's written reports within 3 days of review, verifying compliance of Work, as described in PART 3 - FIELD QUALITY CONTROL.

1.4 QUALITY ASSURANCE

.1 Qualifications:

.1 Installer: company or person specializing in fire stopping installations with 5 years documented experience and approved by manufacturer.

.2 Pre-Installation Meetings: convene pre-installation meeting one week prior to beginning work of this Section, with contractor's representative and Departmental Representative in accordance with Section 01 32 16.07 - Construction Progress Schedule - Bar (GANTT) Chart to:

.1 Verify project requirements.

.2 Review installation and substrate conditions.

.3 Co-ordination with other building subtrades.

.4 Review manufacturer's installation instructions and warranty requirements.

.3 Site Meetings: as part of Manufacturer's Services described in PART 3 - FIELD QUALITY CONTROL, schedule site visits, to review Work, at stages listed.

.1 After delivery and storage of products, and when preparatory Work is complete, but before installation begins.

.2 Twice during progress of Work at 25% and 60% complete.

.3 Upon completion of Work, after cleaning is carried out.

1.5 DELIVERY, STORAGE AND HANDLING

.1 Packing, shipping, handling and unloading:

.1 Deliver, store and handle materials in accordance with Section 01 61 00 - Common Product Requirements.

.2 Deliver, store and handle materials in accordance with manufacturer's written instructions.

.3 Deliver materials to the site in undamaged condition and in original unopened containers, marked to indicate brand name, manufacturer, ULC markings.

.2 Storage and Protection:

.1 Store materials indoors, in dry location and in accordance with manufacturer's recommendations in clean, dry, well-ventilated area.

.2 Replace defective or damaged materials with new.

.3 Waste Management and Disposal:

.1 Separate waste materials for reuse andrecycling in accordance with Section 01 74 21 - Construction/Demolition Waste Management and Disposal.

PART 2 – PRODUCTS

2.1 MATERIALS

.1 Fire stopping and smoke seal systems: in accordance with CAN-ULC-S115.
  .1 Asbestos-free materials and systems capable of maintaining effective barrier against flame, smoke and gases in compliance with requirements of CAN- ULC-S115 and not to exceed opening sizes for which they are intended and conforming to specified special requirements described in PART 3.
  .2 Fire stop system rating: 1 hour.

.2 Service penetration assemblies: systems tested to CAN-ULC-S115.

.3 Service penetration fire stop components: certified by test laboratory to CAN-ULC-S115.

.4 Fire-resistance rating of installed fire stopping assembly in accordance with NBC.

.5 Fire stopping and smoke seals at openings intended for ease of re-entry such as cables: elastomeric seal.

.6 Fire stopping and smoke seals at openings around penetrations for pipes, ductwork and other mechanical items requiring sound and vibration control: elastomeric seal.

.7 Primers: to manufacturer's recommendation for specific material, substrate, and end use.

.8 Water (if applicable): potable, clean and free from injurious amounts of deleterious substances.

.9 Damming and backup materials, supports and anchoring devices: to manufacturer's recommendations, and in accordance with tested assembly being installed as acceptable to authorities having jurisdiction.

.10 Sealants for vertical joints: non-sagging.

PART 3 – EXECUTION

3.1 MANUFACTURER'S INSTRUCTIONS

.1 Compliance: comply with manufacturer's written recommendations or specifications, including product technical bulletins, handling, storage and installation instructions, and datasheets.

3.2 PREPARATION

.1 Examine sizes and conditions of voids to be filled to establish correct thicknesses and installation of materials.
  .1 Ensure that substrates and surfaces are clean, dry and frost free.

.2 Prepare surfaces in contact with fire stopping materials and smoke seals to manufacturer's instructions.

.3 Maintain insulation around pipes and ducts penetrating fire separation without interruption to vapour barrier.

.4 Mask where necessary to avoid spillage and over coating onto adjoining surfaces; remove stains on adjacent surfaces.

3.3 INSTALLATION

.1 Install fire stopping and smoke seal material and components in accordance with manufacturer's certified tested system listing.

.2 Seal holes or voids made by through penetrations, poke-through termination devices, and unpenetrated openings or joints to ensure continuity and integrity of fire separation are maintained.

.3 Provide temporary forming as required and remove forming only after materials have gained sufficient strength and after initial curing.

.4 Tool or trowel exposed surfaces to neat finish.

.5 Remove excess compound promptly as work progresses and upon completion.

3.4 SEQUENCES OF OPERATION

.1 Proceed with installation only when submittals have been reviewed by Departmental Representative.

.2 Install floor fire stopping before interior partition erections.

.3 Metal deck bonding: fire stopping to precede spray applied fireproofing to ensure required bonding.

.4 Mechanical pipe insulation: certified fire stop system component.
- .1 Ensure pipe insulation installation precedes fire stopping.

3.5 FIELD QUALITY CONTROL

.1 Inspections: notify Departmental Representative when ready for inspection and prior to concealing or enclosing fire stopping materials and service penetration assemblies.

.2 Manufacturer's Field Services:
- .1 Obtain written report from manufacturer verifying compliance of Work, in handling, installing, applying, protecting and cleaning of product and submit Manufacturer's Field Reports as described in PART 1 - SUBMITTALS.
- .2 Provide manufacturer's field services consisting of product use recommendations and periodic site visits for inspection of product installation in accordance with manufacturer's instructions.
- .3 Schedule site visits, to review Work, as directed in PART 1 - QUALITY ASSURANCE.

3.6 CLEANING

.1 Proceed in accordance with Section 01 74 11 - Cleaning.

.2 On completion and verification of performance of installation, remove surplus materials, excess materials, rubbish, tools and equipment.

.3 Remove temporary dams after initial set of fire stopping and smoke seal materials.

3.7 SCHEDULE

.1 Fire stop and smoke seal at:
- .1 Penetrations through fire-resistance rated masonry, concrete, and gypsum board partitions and walls.
- .2 Top of fire-resistance rated masonry and gypsum board partitions.
- .3 Intersection of fire-resistance rated masonry and gypsum board partitions.
- .4 Control and sway joints in fire-resistance rated masonry and gypsum board partitions and walls.
- .5 Penetrations through fire-resistance rated floor slabs, ceilings and roofs.
- .6 Around mechanical and electrical assemblies penetrating fire separations.

END OF SECTION

PART 1 – GENERAL

1.1 RELATED REQUIREMENTS

.1 Section 06 40 00 – Architectural woodwork.

.2 Section 08 11 00 – Metal doors and frames.

.3 Section 09 21 99 – Partitions for minor works.

.4 Section 10 22 19 – Post and panel for demountable partition.

1.2 REFERENCES

.1 ASTM International
- .1 ASTM C 919-08, Standard Practice for Use of Sealants in Acoustical Applications.

.2 Canadian General Standards Board (CGSB)
- .1 CGSB 19-GP-5M-1984, Sealing Compound, One Component, Acrylic Base, Solvent Curing (Issue of 1976 reaffirmed, incorporating Amendment No. 1).
- .2 CAN/CGSB-19.13-M87, Sealing Compound, One-component, Elastomeric, Chemical Curing.
- .3 CGSB 19-GP-14M-1984, Sealing Compound, One Component, Butyl-Polyisobutylene Polymer Base, Solvent Curing (Reaffirmation of April 1976).
- .4 CAN/CGSB-19.17-M90, One-Component Acrylic Emulsion Base Sealing Compound.
- .5 CAN/CGSB-19.24-M90, Multi-component, Chemical Curing Sealing Compound.

.3 General Services Administration (GSA) - Federal Specifications (FS)
- .1 FS-SS-S-200-E(2)1993, Sealants, Joint, Two-Component, Jet-Blast-Resistant, Cold Applied, for Portland Cement Concrete Pavement.

.4 Health Canada/Workplace Hazardous Materials Information System (WHMIS)
- .1 Material Safety Data Sheets (MSDS).

1.3 ACTION AND INFORMATIONAL SUBMITTALS

.1 Submit in accordance with Section 01 33 00 - Submittal Procedures.

.2 Product Data:
- .1 Submit manufacturer's instructions, printed product literature and data sheets for joint sealants and include product characteristics, performance criteria, physical size, finish and limitations.
- .2 Manufacturer's product to describe:
  - .1 Caulking compound.
  - .2 Primers.
  - .3 Sealing compound, each type, including compatibility when different sealants are in contact with each other.
- .3 Submit copies of WHMIS MSDS in accordance with Section 01 35 29.06 - Health and Safety Requirements.

.3 Samples:
- .1 Submit 2 samples of each type of material and colour.

.2 Cured samples of exposed sealants for each colour where required to match adjacent material.

.4 Manufacturer's Instructions:
.1 Submit instructions to include installation instructions for each product used.

.5 Sustainable Design Submittals:
.1 Construction Waste Management:
.1 Submit project Waste Management Plan and Waste Reduction Workplan highlighting recycling and salvage requirements.
.2 Submit calculations on end-of-project recycling rates, salvage rates, and landfill rates demonstrating that 50% of construction wastes were recycled or salvaged.

1.4 CLOSEOUT SUBMITTALS

.1 Submit in accordance with Section 01 78 00 - Closeout Submittals.

.2 Operation and Maintenance Data: submit operation and maintenance data for incorporation into manual.

1.5 DELIVERY, STORAGE AND HANDLING

.1 Deliver, store and handle materials in accordance with Section 01 61 00 - Common Product Requirements and with manufacturer's written instructions.

.2 Delivery and Acceptance Requirements: deliver materials to site in original factory packaging, labelled with manufacturer's name and address.

.3 Storage and Handling Requirements:
.1 Store materials off ground, indoors, in dry location and in accordance with manufacturer's recommendations in clean, dry, well-ventilated area.
.2 Store and protect joint sealants from nicks, scratches, and blemishes.
.3 Replace defective or damaged materials with new.

.4 Packaging Waste Management: remove for reuse and return by manufacturer of pallets, crates, padding, and packaging materials as specified in Construction Waste Management Plan and Waste Reduction Workplan in accordance with Section 01 74 21 - Construction/Demolition Waste Management and Disposal.

1.6 SITE CONDITIONS

.1 Ambient Conditions:
.1 Proceed with installation of joint sealants only when:
.1 Ambient and substrate temperature conditions are within limits permitted by joint sealant manufacturer or are above 4.4 degrees C.
.2 Joint substrates are dry.
.3 Conform to manufacturer's recommended temperatures, relative humidity, and substrate moisture content for application and curing of sealants including special conditions governing use.

.2 Joint-Width Conditions:
.1 Proceed with installation of joint sealants only where joint widths are more than those allowed by joint sealant manufacturer for applications indicated.

.3 Joint-Substrate Conditions:
.1 Proceed with installation of joint sealants only after contaminants capable of interfering with adhesion are removed from joint substrates.

1.7 ENVIRONMENTAL REQUIREMENTS

.1 Comply with requirements of Workplace Hazardous Materials Information System (WHMIS) regarding use, handling, storage, and disposal of hazardous materials; and regarding labelling and provision of Material Safety Data Sheets (MSDS) acceptable to Health Canada.

.2 Departmental Representative will arrange for ventilation system to be operated on maximum outdoor air and exhaust during installation of caulking and sealants. Ventilate area of work as directed by Departmental Representative by use of approved portable supply and exhaust fans.]

PART 2 – PRODUCTS

2.1 SEALANT MATERIALS

.1 Do not use caulking that emits strong odours, contains toxic chemicals or is not certified as mould resistant in air handling units.

.2 When low toxicity caulks are not possible, confine usage to areas which off gas to exterior, are contained behind air barriers, or are applied several months before occupancy to maximize off gas time.

.3 Where sealants are qualified with primers use only these primers.

2.2 SEALANT MATERIAL DESIGNATIONS

.1 Type 1:
.1 Three-component polyurethane epoxy termopolymer sealant, chemically polymerized, color choice by Departmental Representative and in accordance with CAN/CGSB-19.24-M90.

.2 Type 2:
.1 One-component with high modulus silicone sealant, color choice by Departmental Representative and in accordance with CAN/CGSB-19.13-M87.
.1 Approved product: Tremco 200 or other acceptable equivalent.

.3 Type 3:
.1 Fast drying latex acrylic sealant paintable with minimal shrinkage, color choice by Departmental Representative.
.1 Approved product: Tremflex 834 from Tremco, or other acceptable equivalent.

.4 Type 4:
.1 Acoustic sealant remaining permanentrly flexible with a synthetic rubber base, in accordance with ASTM D-217 and CAN/ONGC-19.21-M87.
.1 Approved product: Scellant acoustic Tremco, or other acceptable product.

.5 Type 5:
.1 Fire stopping sealant: refer to section 07 84 00 – Fire protection.

.6 Preformed compressible and non-compressible back-up materials:

.1 Polyethylene, urethane, neoprene or vinyl foam:
  .1 Extruded closed cell foam backer rod.
  .2 Size: oversize 30 to 50 %.
.2 Neoprene or butyl rubber:
  .1 Round solid rod, Shore A hardness 70.
.3 High density foam:
  .1 Extruded closed cell polyvinyl chloride (PVC), extruded polyethylene, closed cell, Shore A hardness 20, tensile strength 140 to 200 kPa, extruded polyolefin foam, 32 kg/mü density, or neoprene foam backer, size as recommended by manufacturer.
.4 Bond breaker tape:
  .1 Polyethylene bond breaker tape which will not bond to sealant.

2.3 SEALANT SELECTION

.1 Perimeters of interior frames, as shown on details: sealant type: 3.

.2 Interior masonry vertical control joints (block-to-block, block-to-concrete, and intersecting masonry walls): sealant type: 1.

.3 Joints at tops of non-load bearing masonry walls at the underside of poured concrete: sealant type: 1.

.4 Perimeter of integrated furniture: sealant type: 3.

.5 Perimeter of plumbing fixtures and between top of the countertop and other adjacent materials: sealant type: 2.

.6 Exposed interior control joints in drywall: sealant type: 4.

.7 Acoustic bulkheads sealant: sealant type: 4.

.8 Fire stopping sealant: refer to section 07 84 00 – Fire protection.

2.4 JOINT CLEANER

.1 Non-corrosive and non-staining type, compatible with joint forming materials and sealant in accordance with sealant manufacturer's written recommendations.

.2 Primer: in accordance with sealant manufacturer's written recommendations.

PART 3 – EXECUTION

3.1 EXAMINATION

.1 Verification of Conditions: verify that conditions of substrate previously installed under other Sections or Contracts are acceptable for joint sealants installation in accordance with manufacturer's written instructions.
  .1 Visually inspect substrate in presence of Departmental Representative.
  .2 Inform Departmental Representative of unacceptable conditions immediately upon discovery.
  .3 Proceed with installation only after unacceptable conditions have been remedied and after receipt of written approval to proceed from Departmental Representative.

3.2 SURFACE PREPARATION

.1 Examine joint sizes and conditions to establish correct depth to width relationship for installation of backup materials and sealants.

.2 Clean bonding joint surfaces of harmful matter substances including dust, rust, oil grease, and other matter which may impair Work.

.3 Do not apply sealants to joint surfaces treated with sealer, curing compound, water repellent, or other coatings unless tests have been performed to ensure compatibility of materials. Remove coatings as required.

.4 Ensure joint surfaces are dry and frost free.

.5 Prepare surfaces in accordance with manufacturer's directions.

3.3 PRIMING

.1 Where necessary to prevent staining, mask adjacent surfaces prior to priming and caulking.

.2 Prime sides of joints in accordance with sealant manufacturer's instructions immediately prior to caulking.

3.4 BACKUP MATERIAL

.1 Apply bond breaker tape where required to manufacturer's instructions.

.2 Install joint filler to achieve correct joint depth and shape, with approximately 30% compression.

3.5 MIXING

.1 Mix materials in strict accordance with sealant manufacturer's instructions.

3.6 APPLICATION

.1 Sealant:
- .1 Apply sealant in accordance with manufacturer's written instructions.
- .2 Mask edges of joint where irregular surface or sensitive joint border exists to provide neat joint.
- .3 Apply sealant in continuous beads.
- .4 Apply sealant using gun with proper size nozzle.
- .5 Use sufficient pressure to fill voids and joints solid.
- .6 Form surface of sealant with full bead, smooth, free from ridges, wrinkles, sags, air pockets, embedded impurities.
- .7 Tool exposed surfaces before skinning begins to give slightly concave shape.
- .8 Remove excess compound promptly as work progresses and upon completion.

.2 Curing:
- .1 Cure sealants in accordance with sealant manufacturer's instructions.
- .2 Do not cover up sealants until proper curing has taken place.

3.7 CLEANING

.1 Progress Cleaning: clean in accordance with Section 01 74 11 - Cleaning.
- .1 Leave Work area clean at end of each day.

.2 Clean adjacent surfaces immediately.
.3 Remove excess and droppings, using recommended cleaners as work progresses.
.4 Remove masking tape after initial set of sealant.

.2 Final Cleaning: upon completion remove surplus materials, rubbish, tools and equipment in accordance with Section 01 74 11 - Cleaning.

.3 Waste Management: separate waste materials for reuse and recycling in accordance with Section 01 74 21 - Construction/Demolition Waste Management and Disposal.
.1 Remove recycling containers and bins from site and dispose of materials at appropriate facility.

3.8 PROTECTION

.1 Protect installed products and components from damage during construction.

.2 Repair damage to adjacent materials caused by joint sealants installation.

END OF SECTION

LEGEND

GENERAL

EX Existing to remain

Doors

Materials

AC	Reinforced steel core
ACS	Sound-proof steel
Ai	Reinforced and insulated steel core
AL	Aluminum
Ali	Insulated aluminum
B	Solid wood core cherry plated
BAP	Solid wood core
BM	Solid wood core masonite finish
BME	Hollow core door

Finish

AN	Annodized
P	Paint
V	Factory dye and varnish

Glazing

BR	Armed (simple, clear)
SC	Simple clear
TR	Termpered glass
TT	Simple tempered clear
TTH	Double insulated, tempered clear
TRC	Simple tempered colored

FRAMES

Materials

AC	Steel gauge 16
Ai	Insulated steel (polyurethane)
AL	Aluminum
Ali	Insulated aluminum

Finish

AN	Annodized
P	Paint

Glazing

BR	Armed (simple, clear)
SC	Simple clear
TTH	Double insulated, tempered clear
VS1	Simple clear tempered glass 6mm
VS2	Textured tempered glass 6mm
TH1	Clear insulated unit (VS1+VS1)
TH2	Textured insulated unit (VS1+VS2)
TH3	Textured insulated unit (VS1+BR côté intérieur)
TH4	Textured insulated unit (VS2+BR côté intérieur)

REMARQUES

1. All existing doors and frames at the perimeter of the not in contract zones are to be painted.

IDENTIFICATION			DOORS							FRAMES								
DOOR NUMBER	FROM	TO	TYPE	WIDTH (W), mm	HEIGHT (H), mm	THICKNESS, mm	MATERIALS	FINISH	GLAZING	TYPE	WIDTH (W), mm	HEIGHT (H), mm	MATERIALS	FINISH	GLAZING	DETAILS	ULC (heures)	HARDWARE GROUP (refer to section 08 71 00)
6th FLOOR WEST TOWER																		
600-01	600-A	600-01	P1	914	2560	44	BAP	V	-	C1	990	2600	AC	P	-	1,7	-	GR.5
601-01A	600-A	601-01	P2	914	2560	44	BAP	V	BR	C1	990	2600	AC	P	-	1,7	-	GR.8
601-01B	601-01	601	P2	914	2560	44	BAP	V	BR	C1	990	2600	AC	P	-	1,7	-	GR.8
601-02A	600-A	601-02	P2	914	2560	44	BAP	V	BR	C1	990	2600	AC	P	-	1,7	-	GR.9
601-02B	601	601-02	P2	914	2560	44	BAP	V	BR	C1	990	2600	AC	P	-	1,7	-	GR.6
601-03A	601	601-03	P3	914	2560	44	BAP	V	-	C1	990	2600	AC	P	-	1,7	-	GR.4
601-03B	601	601-03	P3	914	2560	44	BAP	V	-	C1	990	2600	AC	P	-	1,7	-	GR.4
601-04A	600-A	601-04	P2	914	2560	44	BAP	V	BR	C1	990	2600	AC	P	-	1,7	-	GR.9
601-04B	601	601-04	P2	914	2560	44	BAP	V	BR	C1	990	2600	AC	P	-	1,7	-	GR.6
601-05	601-08	601-05	P1	914	2560	44	BAP	V	-	C1	990	2600	AC	P	-	1,7	-	GR.1
601-06A	600-A	601-06	P2	914	2560	44	BAP	V	BR	C1	990	2600	AC	P	-	1,7	-	GR.9
601-06B	601-08	601-06	P2	914	2560	44	BAP	V	BR	C1	990	2600	AC	P	-	1,7	-	GR.6
601-07A	600-A	601-07	P2	914	2560	44	BAP	V	BR	C1	990	2600	AC	P	-	1,7	-	GR.9
601-07B	601-10	601-07	P2	914	2560	44	BAP	V	BR	C1	990	2600	AC	P	-	1,7	-	GR.6
601-08	-	-	-	-	-	-	-	-	-	-	-	-	-	-	-		-	-
601-09	601	601-09	P1	914	2560	44	BAP	V		C2	2250	2600	AC	P	TH1+TH2	1à7	-	GR.2
601-10	-	-	-	-	-	-	-	-	-	-	-	-	-	-	-		-	-
601-11	601	601-11	P1	914	2560	44	BAP	V	-	C2	2250	2600	AC	P	TH1+TH2	1à7	-	GR.3
601-12	601	601-12	P1	914	2560	44	BAP	V	-	C1	990	2600	AC	P	-	1,7	-	GR.7
601-13	-	-	-	-	-	-	-	-	-	-	-	-	-	-	-		-	-
601-14	601	601-14	P1	914	2560	44	BAP	V	-	C2	2250	2600	AC	P	TH1+TH2	1à7	-	GR.3
601-15	601	601-15	P1	914	2560	44	BAP	V	-	C2	2250	2600	AC	P	TH1+TH2	1à7	-	GR.2
601-16	601	601-16	P1	914	2560	44	BAP	V	-	C2	2250	2600	AC	P	TH1+TH2	1à7	-	GR.3
601-17	601	601-17	P1	914	2560	44	BAP	V	-	C2	2250	2600	AC	P	TH1+TH2	1à7	-	GR.2
601-18	601	601-18	P1	914	2560	44	BAP	V	-	C2	2250	2600	AC	P	TH1+TH2	1à7	-	GR.3
601-19	601	601-19	P1	914	2560	44	BAP	V	-	C2	1333	2600	AC	P	TH1+TH2	1à7	-	GR.3
601-20A	600-C	601-20	P2	914	2560	44	BAP	V	BR	C1	990	2600	AC	P	-	1,7	-	GR.8
601-20B	601-20	601	P2	914	2560	44	BAP	V	BR	C1	990	2600	AC	P	-	1,7	-	GR.8
601-21	601	601-21	P1	914	2560	44	BAP	V	-	C2	2250	2600	AC	P	TH3+TH4	1à7	45 min	GR.3.1
601-22	601	601-22	P1	914	2560	44	BAP	V	-	C2	2250	2600	AC	P	TH3+TH4	1à7	45 min	GR.3.1
601-23	601	601-23	P1	914	2560	44	BAP	V	-	C2	2250	2600	AC	P	TH3+TH4	1à7	45 min	GR.3.1
601-24	601	601-24	P1	914	2560	44	BAP	V	-	C2	2250	2600	AC	P	TH3+TH4	1à7	45 min	GR.3.1
601-25A	601-13	601-25	P2	914	2560	44	BAP	V	-	C1	990	2600	AC	P	-	1,7	45 min	GR.11
601-25B	601-26	601-25	P2	1067	2560	44	BAP	V	BR	C3	1143	2600	AC	P	-	1,7	-	GR.11
601-26	600-A	601-26	P2	1067	2560	44	BAP	V	BR	C3	1143	2600	AC	P	-	1,7	45 min	GR.11
603	603	605	P2	914	2560	44	BAP	V	BR	C1	990	2600	AC	P	-	1,7	45 min	GR.11
603-01A	600-B	603-01	P2	914	2560	44	BAP	V	BR	C1	990	2600	AC	P	-	1,7	45 min	GR.11
603-01B	603-01	603	P2	914	2560	44	BAP	V	BR	C1	990	2600	AC	P	-	1,7	-	GR.8
603-02	603	603-02	P1	914	2560	44	BAP	V	-	C1	990	2600	AC	P	-	1,7	45 min	GR.10
603-03	603	603-03	P1	914	2560	44	BAP	V	-	C1	990	2600	AC	P	-	1,7	-	GR.11
603-04	603	603-04	P1	914	2560	44	BAP	V	-	C1	990	2600	AC	P	-	1,7	45 min	GR.10
605-01A	600-B	605-01	P2	914	2560	44	BAP	V	BR	C1	990	2600	AC	P	-	1,7	-	GR.8
605-01B	605-01	605	P2	914	2560	44	BAP	V	BR	C1	990	2600	AC	P	-	1,7	-	GR.8
607	600-B	607	P2	914	2560	44	BAP	V	BR	C1	990	2600	AC	P	-	1,7	-	GR.8
609	600-A	609	P1	914	2560	44	BAP	V	-	C1	990	2600	AC	P	-	1,7	45 min	GR.5

DOOR TYPE

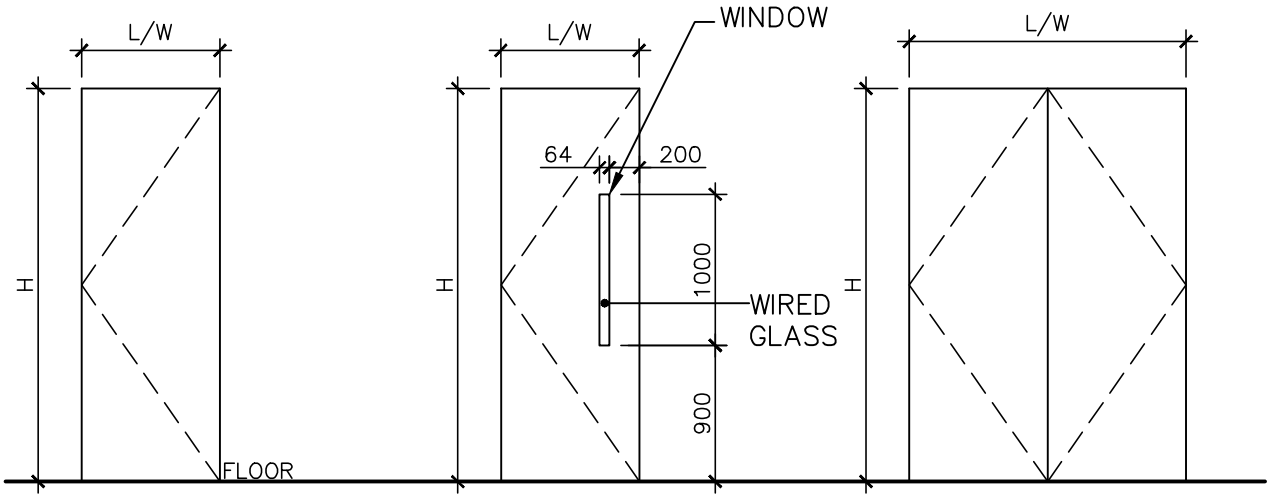

TYPE P1 TYPE P2 TYPE P3

FRAME TYPE

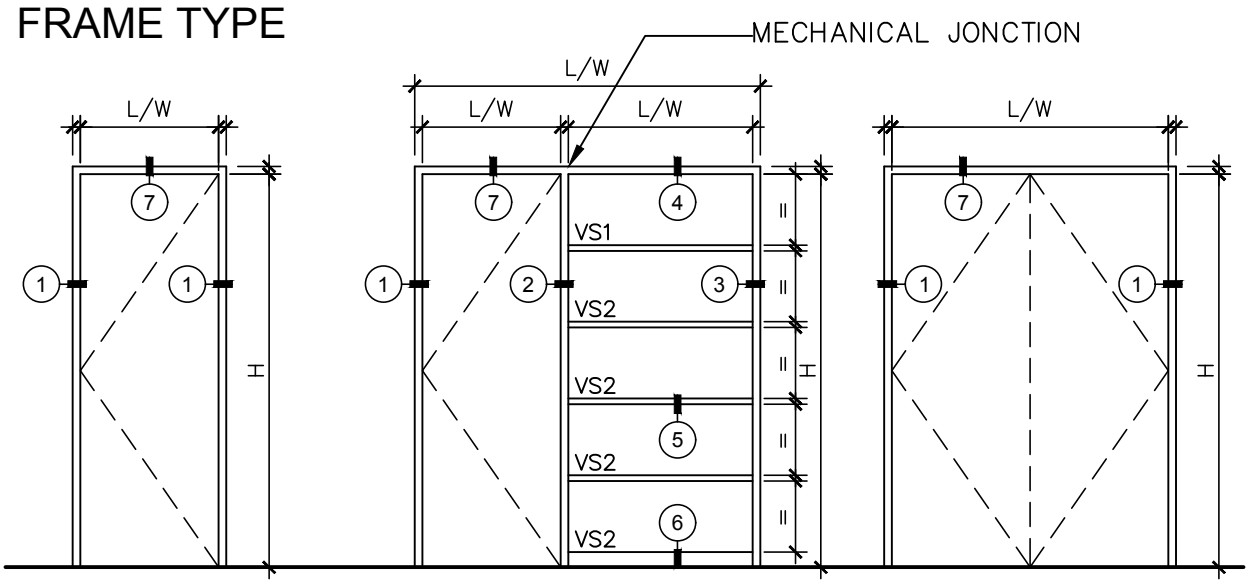

TYPE C1 TYPE C2 TYPE C3

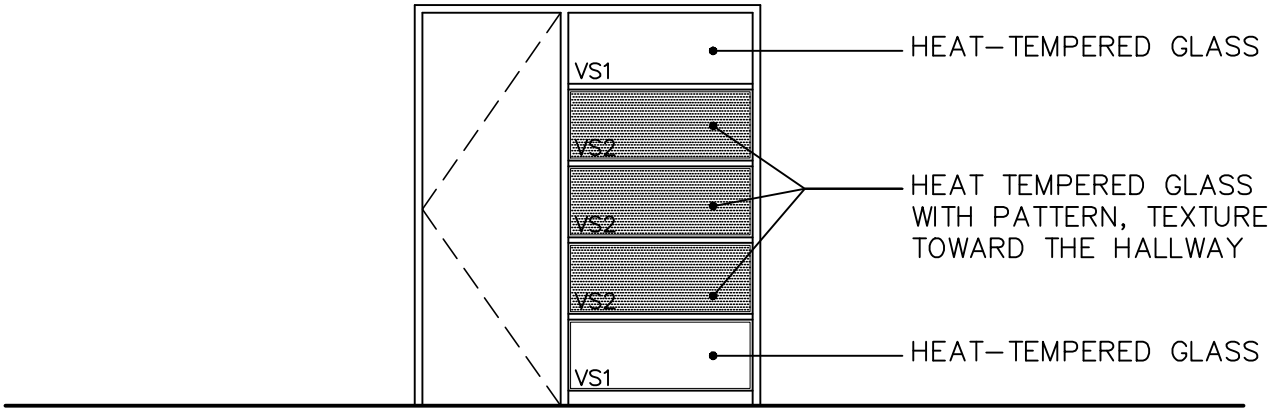

TYPICAL GLAZING ELEVATION
FOR ALL FRAMES

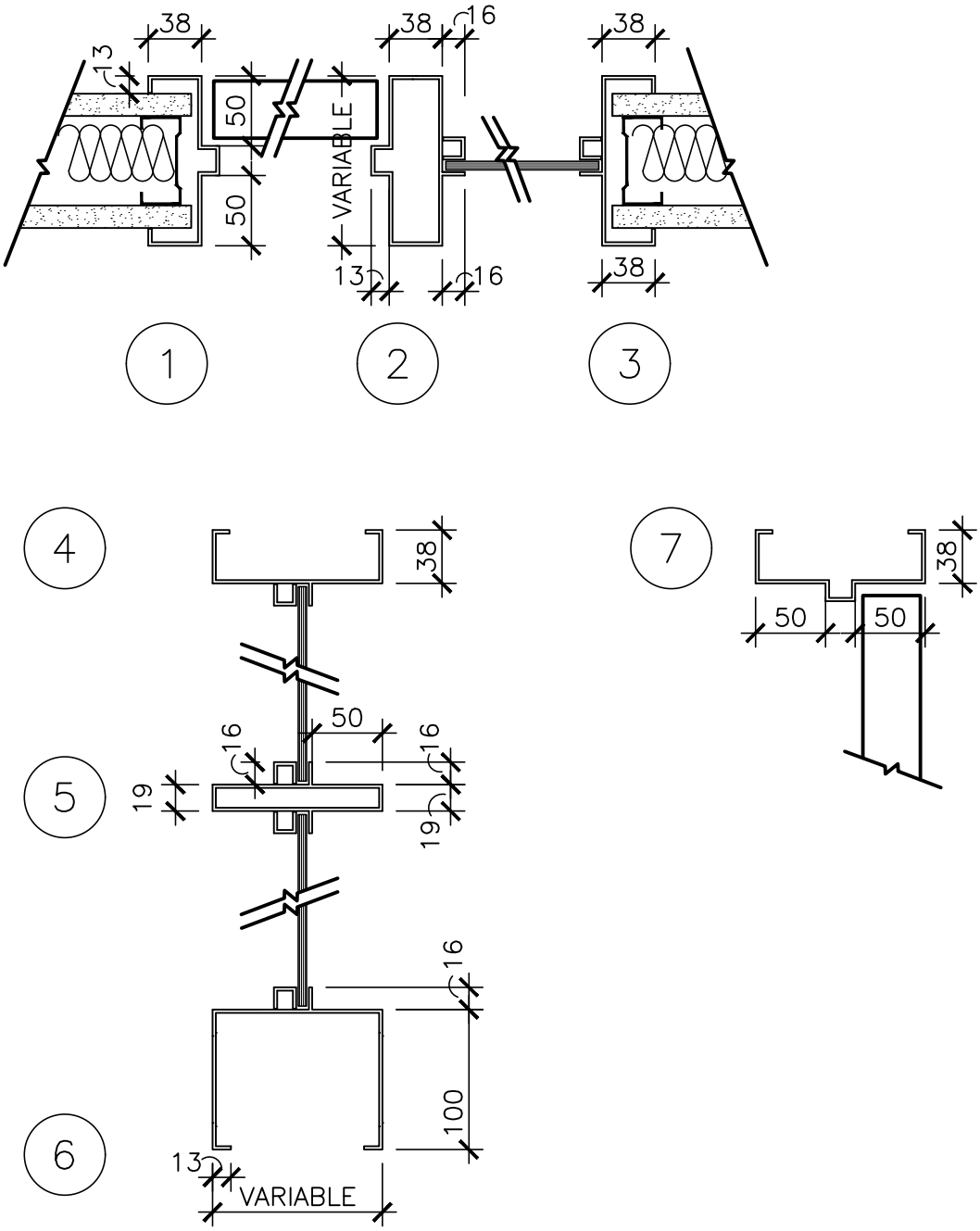

FRAME DETAILS

0 0.25 1: 5

PART 1 – GENERAL

1.1 RELATED REQUIREMENTS

.1 Section 07 92 00 – Joint sealants.

.2 Section 08 71 00 – Door hardware.

.3 Section 08 80 50 – Glazing.

.4 Section 09 21 99 – Partition for minor work.

.5 Section 09 91 23 – Interior painting.

1.2 REFERENCES

.1 American Society for Testing and Materials International (ASTM)
- .1 ASTM A 653/A 653M-06a, Specification for Steel Sheet, Zinc-Coated (Galvanized) or Zinc-Iron Alloy-Coated (Galvannealed) by the Hot-Dip Process.
- .2 ASTM B 29-03, Standard Specification for Refined Lead.
- .3 ASTM B 749-03, Standard Specification for Lead and Lead Alloy Strip, Sheet and Plate Products.

.2 Canadian General Standards Board (CGSB)
- .1 CAN/CGSB-1.181-99, Ready-Mixed Organic Zinc-Rich Coating.
- .2 CGSB 41-GP-19Ma-84, Rigid Vinyl Extrusions for Windows and Doors.

.3 Canadian Standards Association (CSA International)
- .1 CSA-G40.20-04/G40.21-04, General Requirements for Rolled or Welded Structural Quality Steel/Structural Quality Steel.
- .2 CSA W59-[03], Welded Steel Construction (Metal Arc Welding).

.4 Canadian Steel Door Manufacturers' Association (CSDMA)
- .1 CSDMA, Recommended Specifications for Commercial Steel Doors and Frames, 2000.
- .2 CSDMA, Selection and Usage Guide for Commercial Steel Doors, 1990.

.5 National Fire Protection Association (NFPA)
- .1 NFPA 80-[99], Standard for Fire Doors and Fire Windows.
- .2 NFPA 252-[03], Standard Methods of Fire Tests of Door Assemblies.

.6 Underwriters' Laboratories of Canada (ULC)
- .1 CAN/ULC-S701-01, Standard for Thermal Insulation, Polystyrene, Boards and Pipe Covering.
- .2 CAN/ULC-S702-97, Standard for Thermal Insulation, Mineral Fibre, for Buildings.
- .3 CAN/ULC-S704-03, Standard for Thermal Insulation, Polyurethane and Polyisocyanurate Boards, Faced.
- .4 CAN4-S104-M80, Standard Method for Fire Tests of Door Assemblies.
- .5 CAN4-S105-M85, Standard Specification for Fire Door Frames Meeting the Performance Required by CAN4-S104.

1.3 SYSTEM DESCRIPTION

.1 Design Requirements:

.1 Design exterior frame assembly to accommodate to expansion and contraction when subjected to minimum and maximum surface temperature of -35 degrees C to 35 degrees C.

.2 Maximum deflection for exterior steel entrance screens under wind load of 1.2 kPa not to exceed 1/175th of span.

.3 Steel fire rated doors and frames: labelled and listed by an organization accredited by Standards Council of Canada in conformance with CAN4-S104 and NFPA 252 for ratings specified or indicated.

.4 Provide fire labelled frames for openings requiring fire protection ratings. Test products in conformance with CAN4-S104, ASTM E 152 or NFPA 252 and listed by nationally recognized agency having factory inspection services.

1.4 ACTION AND INFORMATIONAL SUBMITTALS

.1 Provide submittals in accordance with Section 01 33 00 - Submittal Procedures.

.2 Provide product data: in accordance with Section 01 33 00 - Submittal Procedures.

.3 Provide shop drawings: in accordance with Section 01 33 00 - Submittal Procedures.

.1 Submit drawings stamped and signed by professional engineer registered or licensed in Province of Quebec, Canada.

.2 Indicate each type of door, material, steel core thicknesses, mortises, reinforcements, location of exposed fasteners, openings, glazed, arrangement of hardware and fire rating and finishes.

.3 Indicate each type frame material, core thickness, reinforcements, glazing stops, location of anchors and exposed fastenings and reinforcing fire rating finishes.

.4 Include schedule identifying each unit, with door marks and numbers relating to numbering on drawings and door schedule.

.5 Submit test and engineering data, and installation instructions.

.4 Provide samples in accordance with Section 01 33 00 - Submittal Procedures.

1.5 SUSTAINABLE REQUIREMENTS

.1 Materials and products in accordance with Section 01 47 15 - Sustainable Requirements: Construction.

1.6 DELIVERY, STORAGE AND HANDLING

.1 Deliver, store and handle materials in accordance with Section 01 61 00 - Common Product Requirements.

.2 Waste Management and Disposal:

.1 Separate waste materials for reuse and recycling in accordance with Section 01 74 21 - Construction/Demolition Waste Management and Disposal.

.2 Evacuate all wrapping material from site and send them to appropriated installation for recycling.

.3 Place all wrapping materials in disposal dumpsters on site for recycling. Conform to the Waste disposal schedule.

.4 Transport unused paint and sealant products to approved hazardous materials collection site approved by Departmental Representative.

.5 It is forbidden to dump unused paint and sealants into sewers, open water, lakes, ground or any other place where there is a risk to health or to the environment.

.6 Transport unused metal components to metal recycling facility approved by Departmental Representative.

.7 Damaged or broken windows are not recyclable; they must be separated from the material for recycling.

1.7 WARRANTY

.1 For the material prescribed in this section, the 12 months warranty described in the general conditions will be extended by 48 months for a total of 5 years.

.2 Provide the written warranty, issued in the owner's name, certifying that the work specified in this section will be free of defects in material and installation from the final acceptance.

.3 The warranty must cover the cost of any expenses arising from the repair of the defect or other damage to the building resulting from defect of the work of this section.

.4 The warranty must be approved by the Departmental Representative and owner.

PART 2 – PRODUCTS

2.1 MATERIALS

.1 Hot dipped galvanized steel sheet: to ASTM A 653M, ZF75, minimum base steel thickness in accordance with CSDMA Table 1 - Thickness for Component Parts.

.2 Reinforcement channel: to CSA G40.20/G40.21, Type 44W, coating designation to ASTM A 653M, ZF75.

2.2 ADHESIVES

.1 Lock-seam doors: fire resistant, resin reinforced polychloroprene, high viscosity, sealant/adhesive.

2.3 PRIMER

.1 Touch-up prime CAN/CGSB-1.181.

.1 Maximum VOC limit 50 g/L to GC-03.

2.4 PAINT

.1 Field paint steel doors and frames in accordance with Section 09 91 23 - Interior Painting. Protect weatherstrips from paint. Provide final finish free of scratches or other blemishes.

.1 Maximum VOC emission level 50 g/L to GS-11.

2.5 ACCESSORIES

.1 Door silencers: single stud rubber/neoprene type.

.2 Fabricate glazing stops as formed channel, minimum 16 mm height, accurately fitted, butted at corners and fastened to frame sections with counter-sunk oval head sheet metal screws.

.3 Metallic paste filler: to manufacturer's standard.

.4 Fire labels: metal rivited.

.5 Sealant: type 2: as prescribed to Section 07 92 00 – Joint sealants.

.6 Glazing: as prescribed to Section 07 92 00.

.7 Make provisions for glazing as indicated and provide necessary glazing stops.

.1 Provide removable stainless steel glazing beads for[use with glazing tapes and compounds and secured with countersunk stainless steel screws and dry glazing of snap-on type.

2.6 FRAMES FABRICATION GENERAL

.1 Fabricate frames in accordance with CSDMA specifications.

.2 Fabricate frames to profiles and maximum face sizes as indicated.

.3 Indoor frames: 1,6mm thick, welded.

.4 Blank, reinforce, drill and tap frames for mortised, templated hardware, and electronic hardware using templates provided by finish hardware supplier. Reinforce frames for surface mounted hardware.

.5 Protect mortised cutouts with steel guard boxes.

.6 Prepare frame for door silencers, 3 for single door, 2 at head for double door.

.7 Manufacturer's nameplates on frames and screens are not permitted.

.8 Conceal fastenings except where exposed fastenings are indicated.

.9 Provide factory-applied touch up primer at areas where zinc coating has been removed during fabrication.

2.7 FRAME ANCHORAGE

.1 Provide appropriate anchorage to floor and wall construction.

.2 Locate each wall anchor immediately above or below each hinge reinforcement on hinge jamb and directly opposite on strike jamb.

.3 Provide 2 anchors for rebate opening heights up to 1520 mm and 1 additional anchor for each additional 760 mm of height or fraction thereof.

.4 Locate anchors for frames in existing openings not more than 150 mm from top and bottom of each jambs and intermediate at 660 mm on centre maximum.

2.8 FRAMES: WELDED TYPE

.1 Welding in accordance with CSA W59.

.2 Accurately mitre or mechanically joint frame product and securely weld on inside of profile.

.3 Cope accurately and securely weld butt joints of mullions, transom bars, centre rails and sills.

.4 Grind welded joints and corners to a flat plane, fill with metallic paste and sand to uniform smooth finish.

.5 Securely attach floor anchors to inside of each jamb profile.

.6 Weld in 2 temporary jamb spreaders per frame to maintain proper alignment during shipment.

.7 Fabricate frame products, fabricate the frame in sections as indicated to the door and frame schedule and splice joints for field assembly.

PART 3– EXECUTION

3.1 MANUFACTURER'S INSTRUCTIONS

.1 Compliance: comply with manufacturer's written recommendations or specifications, including product technical bulletins, handling, storage and installation instructions, and datasheets.

3.2 INSTALLATION GENERAL

.1 Install labelled steel fire rated doors and frames to NFPA 80 except where specified otherwise.

.2 Install doors and frames to CSDMA Installation Guide.

3.3 FRAME INSTALLATION

.1 Set frames plumb, square, level and at correct elevation.

.2 Secure anchorages and connections to adjacent construction.

.3 Brace frames rigidly in position while building-in. Install temporary horizontal wood spreader at third points of door opening to maintain frame width. Provide vertical support at centre of head for openings over 1200 mm wide. Remove temporary spreaders after frames are built-in.

.4 Make allowances for deflection of structure to ensure structural loads are not transmitted to frames.

.5 Caulk perimeter of frames between frame and adjacent material.

3.4 FINISH REPAIRS

.1 Touch up with primer finishes damaged during installation.

.2 Fill exposed frame anchors and surfaces with imperfections with metallic paste filler and sand to a uniform smooth finish.

3.5 GLAZING

.1 Install glazing for doors and frames in accordance with Section 08 80 50 - Glazing.

END OF SECTION

PART 1 - GENERAL

1.1 RELATED REQUIREMENTS

.1 Section 08 11 00 – Metal doors and frames.

.2 Section 08 71 00 – Door hardware.

1.2 REFERENCES

.1 Architectural Woodwork Manufacturers Association of Canada (AWMAC).
- .1 Quality Standards for Architectural Woodwork 1998.

.2 Canadian General Standards Board (CGSB).
- .1 CAN/CGSB-71.19-M88, Adhesive, Contact, Sprayable.
- .2 CAN/CGSB-71.20-M88, Adhesive, Contact, Brushable.

.3 Canadian Standards Association (CSA International).
- .1 CSA A440.2-98, Energy Performance of Windows and Other Fenestration Systems.
- .2 CSA O115-M1982(R2001), Hardwood and Decorative Plywood.
- .3 CAN/CSA O132.2 Series-90(R1998), Wood Flush Doors.
- .4 CAN/CSA-O132.5-M1992(R1998), Stile and Rail Wood Doors.
- .5 CAN/CSA-Z808-96, A Sustainable Forest Management System: Guidance Document.
- .6 CSA Certification Program for Windows and Doors 00.

.4 Environmental Choice Program (ECP).
- .1 CCD-045-92, Sealants and Caulking Compounds.
- .2 CCD-046-92, Adhesives.

.5 National Fire Protection Association (NFPA).
- .1 NFPA 80-1999, Standard for Fire Doors and Fire Windows.
- .2 NFPA 252-1999, Standard Method of Fire Tests of Door Assemblies.

.6 Underwriters' Laboratories of Canada (ULC).
- .1 CAN-4S104M-80(R1985), Fire Tests of Door Assemblies.
- .2 CAN4-S105M-85 (R1992), Fire Door Frames Meeting the Performance Required by CAN4-S104.

1.3 ACTION AND INFORMATIONAL SUBMITTALS

.1 Product Data:
- .1 Submit manufacturer's printed product literature, specifications and data sheet in accordance with Section 01 33 00 - Submittal Procedures.
- .2 Submit copies of WHMIS MSDS - Material Safety Data Sheets in accordance with Section 01 33 00 - Submittal Procedures. Indicate VOC's:
  - .1 For caulking materials during application and curing.
  - .2 For door materials and adhesives.

.2 Shop Drawings:
- .1 Submit shop drawings in accordance with Section 01 33 00 - Submittal Procedures.
- .2 Indicate door types and cutouts for lights and louvres, sizes, core construction, transom panel construction and cutouts.

1.4 SAMPLES

.1 Submit samples in accordance with Section 01 33 00 - Submittal Procedures.

.2 Submit one 300 x 300 mm corner sample of each type wood door.

.3 Show door construction, core, glazing detail and faces.

.4 Manufacturer's Instructions:
  .1 Submit manufacturer's installation instructions.

1.5 QUALITY ASSURANCE

.1 Regulatory Requirements:
  .1 Wood fire rated doors: labelled and listed by an organization accredited by Standards Council of Canada.

.2 Test Reports: certified test reports showing compliance with specified performance characteristics and physical properties.

.3 Certificates: product certificates signed by manufacturer certifying materials comply with specified performance characteristics and criteria and physical requirements.

.4 Pre-installation Meetings: conduct pre-installation meeting to verify project requirements, manufacturer's installation instructions and manufacturer's warranty requirements.

1.6 DELIVERY, STORAGE, AND HANDLING

.1 Storage and Protection:
  .1 Protect doors from dampness. Arrange for delivery after work causing abnormal humidity has been completed.
  .2 Store doors in well ventilated room, off floor, in accordance with manufacturer's recommendations.
  .3 Protect doors from scratches, handling marks and other damage. Wrap doors.
  .4 Store doors away from direct sunlight.

1.7 WASTE MANAGEMENT AND DISPOSAL

.1 Remove from site and dispose of packaging materials at appropriate recycling facilities.

.2 Dispose of corrugated cardboard, polystyrene, plastic packaging material in appropriate on-site bin for recycling in accordance with site waste management program.

.3 Unused or damaged glazing materials are not recyclable and must not be diverted to municipal recycling programs.

.4 Divert unused adhesive material from landfill to official hazardous material collections site approved by Departmental Representative.

.5 Do not dispose of unused paint materials into sewer systems, into lakes, streams, onto ground or in locations where it will pose health or environmental hazard.

1.8 WARRANTY

.1 For the material prescribed in this section, the 12 months warranty described in the general conditions will be extended by 24 months for a total of 3 years.

.2 Provide the written warranty, issued in the owner's name, certifying that the work specified in this section will be free of defects in material and installation from the final acceptance.

.3 The warranty must cover the cost of any expenses arising from the repair of the defect or other damage to the building resulting from defect of the work of this section.

.4 The warranty must be approved by the Departmental Representative and owner.

PART 2 - PRODUCTS

2.1 FIRE RATED WOOD DOORS

.1 Wood doors: tested in accordance with CAN4-S104 to achieve rating as scheduled.

2.2 WOOD FLUSH DOORS

.1 Solid core: to CAN/CSA-O132.2.1.
- .1 Construction:
  - .1 Solid particleboard core: stile and rail frame bonded to particleboard core with wood lock blocks and special describe wood blocking, 7-ply construction.
  - .2 Upper and lower cross member consisting of unrolled wood veneer 3mm thick, longitudinally laminated by hot pressing with a structural adhesive type 1 with a total width of 57mm including a slice of soft wood 16mm thick.
  - .3 Wings composed of unrolled wood veneer 3mm thick, longitudinally laminated by hot pressing with a structural adhesive type 1 with a total width of 108mm including a slice of soft wood 16mm thick.
- .2 Face Panels:
  - .1 Hardwood; veneer grades: cherry finished, sliced cut, rotated arrangement, color of the dye will be customized.
  - .2 Finish: Factory prefinished, UV finish system, satin finish.
  - .3 Adhesive: Type 1 (impermeable) for interior doors.
  - .4 Reference product: Lambton door, serie 7-8300-CE factory finish or approved equivalent.

2.3 FABRICATION

.1 Vertical edge strips.

.2 Prepare doors for hardware and glazing with glazing stops with mitred corners.

.3 Finish laminated plastic smooth and flush with stile edges of door and bevel at approximately 20 degrees.

PART 3 - EXECUTION

3.1 MANUFACTURER'S INSTRUCTIONS

.1 Compliance: comply with manufacturer's written data, including product technical bulletins, product catalogue installation instructions, product carton installation instructions, and data sheets.

3.2 INSTALLATION

.1 Unwrap and protect doors in accordance with CAN/CSA-O132.2 Series, Appendix A.

.2 Install labelled fire rated doors to NFPA 80.

.3 Install doors and hardware in accordance with manufacturer's printed instructions and CAN/CSA-O132.2 Series, Appendix A.

.4 Adjust hardware for correct function.

.5 Install glazing in accordance with Section 08 80 50 - Glazing.

.6 Install stops.

.7 Secure transom and side panels by means of stops.

3.3 ADJUSTMENT

.1 Re-adjust doors and hardware just prior to completion of building to function freely and properly.

3.4 CLEANING

.1 Perform cleaning as soon as possible after installation to remove construction and accumulated environmental dirt.

.2 Remove traces of primer, caulking; clean doors and frames.

.3 Clean glass and glazing materials with approved non-abrasive cleaner.

.4 On completion of installation, remove surplus materials, rubbish, tools and equipment barriers.

END OF SECTION

PART 1 – GENERAL

1.1 RELATED REQUIREMENTS

.1 Section 02 41 99 – Demolition for minor work.

.2 Section 08 11 00 – Metal doors and frames.

.3 Section 08 14 16 – Flush wood door.

.4 Section 26, for all electrical wiring for magnetic bolts and electric release devices and locks.

1.2 REFERENCES

.1 American National Standards Institute (ANSI) / Builders Hardware Manufacturers Association (BHMA)
- .1 ANSI/BHMA A156.1-2000, American National Standard for Butts and Hinges.
- .2 ANSI/BHMA A156.2-2003, Bored and Preassembled Locks and Latches.
- .3 ANSI/BHMA A156.3-2001, Exit Devices.
- .4 ANSI/BHMA A156.4-2000, Door Controls - Closers.
- .5 ANSI/BHMA A156.5-2001, Auxiliary Locks and Associated Products.
- .6 ANSI/BHMA A156.6-2005, Architectural Door Trim.
- .7 ANSI/BHMA A156.8-2005, Door Controls - Overhead Stops and Holders.
- .8 ANSI/BHMA A156.10-1999, Power Operated Pedestrian Doors.
- .9 ANSI/BHMA A156.12-2005, Interconnected Locks and Latches.
- .10 ANSI/BHMA A156.13-2002, Mortise Locks and Latches Series 1000.
- .11 ANSI/BHMA A156.14-2002, Sliding and Folding Door Hardware.
- .12 ANSI/BHMA A156.15-2006, Release Devices - Closer Holder, Electromagnetic and Electromechanical.
- .13 ANSI/BHMA A156.16-2002, Auxiliary Hardware.
- .14 ANSI/BHMA A156.17-2004, Self-closing Hinges and Pivots.
- .15 ANSI/BHMA A156.18-2006, Materials and Finishes.
- .16 ANSI/BHMA A156.19-2002, Power Assist and Low Energy Power - Operated Doors.
- .17 ANSI/BHMA A156.20-2006, Strap and Tee Hinges and Hasps.

.2 Canadian Steel Door and Frame Manufacturers' Association (CSDMA)
- .1 CSDMA Recommended Dimensional Standards for Commercial Steel Doors and Frames - 2009.

1.3 ACTION AND INFORMATIONAL SUBMITTALS

.1 Submit in accordance with Section 01 33 00 - Submittal Procedures.

.2 Product Data:
- .1 Submit manufacturer's instructions, printed product literature and data sheets for door hardware and include product characteristics, performance criteria, physical size, finish and limitations.

.3 Samples:
- .1 Submit for review and acceptance of each unit.
- .2 Samples will be returned for inclusion into work.
- .3 Identify each sample by label indicating applicable specification paragraph number, brand name and number, finish and hardware package number.

.4 After approval samples will be returned for incorporation in Work.

.4 Hardware List:
.1 Submit contract hardware list.
.2 Indicate specified hardware, including make, model, material, function, size, finish and other pertinent information.
.3 The opening schedule shall be prepared for each opening. Provide a description of operation for each opening including electrified or electronically equipped hardware. Inaddition, for each opening, mention the group number of the specifications.

.5 Test Reports: certified test reports showing compliance with specified performance characteristics and physical properties.

.6 Manufacturer's Instructions: submit manufacturer's installation instructions.

1.4 CLOSEOUT SUBMITTALS

.1 Submit in accordance with Section 01 78 00 - Closeout Submittals.

.2 Operation and Maintenance Data: submit operation and maintenance data for door hardware for incorporation into manual.

1.5 MAINTENANCE MATERIALS SUBMITTALS

.1 Extra Stock Materials:
.1 Supply maintenance materials in accordance with Section 01 78 00 - Closeout Submittals.
.2 Tools:
.1 Supply 2 sets of wrenches for door closers, locksets and fire exit hardware.

1.6 QUALITY ASSURANCE

.1 Regulatory Requirements:
.1 Hardware for doors in fire separations and exit doors certified by a Canadian Certification Organization accredited by Standards Council of Canada.

.2 Certificates: product certificates signed by manufacturer certifying materials comply with specified performance characteristics and criteria and physical requirements.

1.7 DELIVERY, STORAGE AND HANDLING

.1 Deliver, store and handle materials in accordance with Section 01 61 00 - Common Product Requirements and with manufacturer's written instructions.

.2 Delivery and Acceptance Requirements: deliver materials to site in original factory packaging, labelled with manufacturer's name and address.

.3 Package items of hardware including fastenings, separately or in like groups of hardware, label each package as to item definition and location.

.4 Storage and Handling Requirements:
.1 Store materials off ground, indoors, in dry location and in accordance with manufacturer's recommendations in clean, dry, well-ventilated area.
.2 Store and protect door hardware from nicks, scratches, and blemishes.
.3 Protect prefinished surfaces with wrapping.

.4 Replace defective or damaged materials with new.

.5 Packaging Waste Management: remove for reuse and return by manufacturer of pallets, crates, padding, and packaging materials as specified in Construction Waste Management Plan in accordance with Section 01 74 21 - Construction/Demolition Waste Management and Disposal.

1.8 WARRANTY

.1 For the material prescribed in this section, the 12 months warranty described in the general conditions will be extended by 48 months for a total of 5 years.

.2 Provide the written warranty, issued in the owner's name, certifying that the work specified in this section will be free of defects in material and installation from the final acceptance.

.3 The warranty must cover the cost of any expenses arising from the repair of the defect or other damage to the building resulting from defect of the work of this section.

.4 The warranty must be approved by the Departmental Representative and owner.

1.9 QUALIFICATIONS

.1 The contractor will hire a Hardware Consultant (paid by the contractor) certified AHC (Architectural Hardware Consultant) in good standing with the DHI (Door and Hardware Institute) with a minimum of 10 years experiences supplying and installing hardware. The hardware consultant will provide a detailed schedule for each door.

PART 2 – PRODUCTS

2.1 HARDWARE ITEMS

.1 Use one manufacturer's products only for similar items.

2.2 MATERIALS AND FINISHES SCHEDULE (ANSI/BHMA)

Code description	Material	Canadian equivalent
600 Primer	Steel	CP
626 Satin chrome	Brass, bronze	C26D
628 Satin aluminum and clear anodized	Aluminum	C28
630 Satin stainless steel	Stainless steel serie 300	C32D
689 Peint aluminium	Any of them	C28

Important: Foot plate must not be in contact with the weather stripping, moldings or astragals or glazed opening of the door. The dimensions given in the hardware group are as a guide. Coordination must be done before production to ensure the right dimensions. The screws for the foot plates must be in stainless steel with a conical head. All other models will be refused.

2.3 STANDARD LOCATION FOR ARCHITECTURAL HARDWARE

.1 Refer to documents for standard hardware positioning.

2.4 DOOR SILL

.1 Refer to documents for standard hardware positioning.

2.5 DOOR BRUSHES

.1 Refer to documents for standard hardware positioning.

2.6 HARDWARE

.1 Use only products from a single manufacturer in case of similar parts.

.2 For the detailed liste of hardware, refer to PART4 of this section.

.3 Only latches and locks on the list of approved products issued by ONGC are acceptable for the purpose of the present work.

.4 General:

.1 All latches lock provided with anti-dust casting.

.2 Unless stated otherwise by the Departmental Representative or in the hardware groups, the bumper are wall mounted. The floor mounted bumper will be aligned with the door frame so that it opens at 90 degrees, unless the door is installed at 50mm from the wall and there is a coat hook behind it, the bumper will be at 85mm from the wall.

.3 The electrical operator boxes will be Duracro or anodized aluminum finish, at the Departmental Representative's choice.

.5 Foot plate must not be in contact with the weather stripping, moldings or astragals or glazed opening of the door. The dimensions given in the hardware group are as a guide. Coordination must be done before production to ensure the right dimensions. The screws for the foot plates must be in stainless steel with a conical head. All other models will be refused.

2.7 REQUIREMENTS

.1 Except for special cases prescribed in the hardware list, all hardware required for the work will be commercial and a robust quality standard. For finish, refer to the hardware list.

.2 Submit 3 copies of the hardware list as prescribed at article 5.0 of the door hardware schedule for coordination purposes. The hardware list will include the installation and the description of each item.

.3 The hardware schedule is provided to determine the type, function, quality and minimum weight of the required items, but should not be interpreted as a quantity list. The contractor must make sure to provide any additional hardware that is not on the list but still needed to complete the installation of the doors.

.4 Fabricate hardware in accordance with the ANSI standard.

.5 In the absence of an ANSI standard, the hardware must be able to fulfill its function and be of a recognized use.

.6 Electric diagrams: submit the final circuit diagrams for approval. These should be consistent with security and fire alarm systems.

.7 Submit for approval the electrical connection diagram specified in this section.

2.8 FASTENINGS

.1 Use only fasteners provided by manufacturer. Failure to comply may void warranties and applicable licensed labels.

.2 Supply screws, bolts, expansion shields and other fastening devices required for satisfactory installation and operation of hardware.

.3 Exposed fastening devices to match finish of hardware.

.4 Where pull is scheduled on one side of door and push plate on other side, supply fastening devices, and install so pull can be secured through door from reverse side. Install push plate to cover fasteners.

.5 Use fasteners compatible with material through which they pass.

.6 Screws for foot plates shall be stainless steel with conical head. All other model will be refused.

2.9 VANDALISM PROTECTION

.1 Even if they are not specifically described in this section or indicated to the hardware list, provide the protective pieces as protector bolts, hinges with non-removable pins hinges, etc., for all exterior doors.

2.10 KEYING

.1 Doors, padlocks and cabinet locks to be as directed by Departmental Representative. Prepare detailed keying schedule in conjunction with Departmental Representative.

.2 Locks on doors and cabinets must be controlled by different keys and subject to master key and a grand master key outside of the building key system.
.1 Room 600-01 must be ok the keying system of the building.

.3 The keying system will be completed by the Departmental Representative.

.4 Submit a keying schedule to the Departmental Representative.

PART 3– EXECUTION

3.1 EQUIVALENT SUBSTITUTION

.1 The contractor have to prepare his bid with the materials, accessories and appliances specified in the drawings and the specification, as he will, if the contract is granted, furnish exactly such materials, accessories and appliances.

.2 The hardware numbers listed in the legend of architectural hardware groups are standardized items that meet certain quality criteria.

3.2 RESPONSIBILITY

.1 The finishing hardware will be suitably adapted for the specified use and will be suitable for the designated location. In the event that any specified or requested hardware does not meet the required requirements, the hardware supplier must promptly correct or modified to the correct product in order to avoid any manufacturing delay and delivery of the hardware.

.2 The work, the supplies and services required under this section will be performed by a single subcontractor, except for the installation of the finishing hardware and the work from the firm specialized in electrified or electronically hardware may be entrusted to specialized subcontractors.

.3 At the beginning and the end of the work, a meeting will be held with the supplier, the installer, the general contractor, the electrician and a representative of each related discipline, in order to properly coordinate the installation and to operate the hardware. The consultant A.H.C and the architect will preside those reunions.

.4 During construction, the subcontractor will make the necessary checks that the finishing hardware he supplies is properly installed and will inform the contractor.

.5 Installation of fire-rated doors:
- .1 Quebec Construction Code 2005 (CCQ) refer to NFPS 80 Standard for Fire Doors and Other Opening Protectives 2007 edition for all fire openings.
- .2 NFPA 80, article #6.4.4.7.1 states «Locks, latches, surface-mounted top and bottom bolts, and fire exit hardware shall de secured to reinforcements in the doors with machine screws or shall be attached with through-bolts».
- .3 NFPA 80, article #6.5.2 states :« All components shall be installed in accordance with the manufacturers' installation instructions and shall be adjusted to function as described in the listing »
- .4 The failure to comply with the above will void the fire-rated certification of the opening.

3.3 INSTALLATION

.1 Manufacturer's Instructions: comply with manufacturer's written recommendations, including product technical bulletins, product catalogue installation instructions, product carton installation instructions, and data sheets.

.2 Supply metal door and frame manufacturers with complete instructions and templates for preparation of their work to receive hardware.

.3 Supply manufacturers' instructions for proper installation of each hardware component.

.4 Install hardware to standard hardware location dimensions in accordance with CSDFMA Canadian Metric Guide for Steel Doors and Frames (Modular Construction).

.5 Install hardware parts at standard heights, from finished floor to center line of work unless otherwise stated on plans and specifications:
- .1 Key switches: 1370mm, center cylinder to finished floor.
- .2 Weather-stripping will be installed on the door, on the hinges side and the frame on the perimeter.

.3 Protective plated will be installed, centered, at the bottom of the door, except for doors with automatic door sills or with a stop sill. In those cases, the plate must be placed 5mm above the sill. For single doors, center the plates on the door. On pair doors, install it at 5mm from the center edge of each door and, at the hinges side of the door, a sufficient distance to prevent it from touching the frame, or the weather-strip.

.4 All other hardware not listed above will be installed as recommended by the manufacturer's installation instructions.

.5 When 4 hinges per door are specified, the top of the top hinge will be at 100mm of the top of the door, the second at 125mm below the first one, the third centered between the second and the lower one and the last at 200mm from the bottom of the door (bottom of the hinge).

.6 Installation will be done by experienced installers who have worked with this type of hardware. It includes the adjustment and verification of operation of the various elements during the installation and before the first inspection of the consultants.

.7 Locks or pallets of locks must be installed to allow hardware fitting.

.8 Shock absorber, weatherstripping and sound cutter will be installed after painting. Any other hardware except the hinges will be installed after the second coat of paint, stain or varnish. Perform the holes and adjustments and mortise the doors before finishes door work.

.9 Install all hardware aplomb with original screws, bolts and fasteners supplied by manufacturer and as directed. The parts will be recessed, flush with the face of the doors and frames. Adjust the moving parts so that the doors function smoothly. Unless other agreed with the Departmental Representative, no self-tapping and/or self-drilling screws will be accepted.

.10 Any fixation such as screw, etc. will be installed perpendicular to the face of the piece. Drill as required. The screws will be strictly those supplied by the manufacturer and must be installed according the best practice of the trade. Damaged, misaligned or broken screws will be replaced.

.11 Mechanical and/or electrical doors will be installed first will all valve adjustments and in a second steps, adjustments or final adjustments of the valves, brakes, and all system balancing before the reception.

.12 Plates will be installed before the finish coat of paint and protective paper removed only after the last coat of paint.

.13 If the installation is such that the door stopper touch the handle, install the stopper at the bottom.

.14 Install key control cabinet.

.15 Use only manufacturer's supplied fasteners.

.1 Use of "quick" type fasteners, unless specifically supplied by manufacturer, is unacceptable.

.16 Remove construction cores when directed by Departmental Representative.

.1 Install permanent cores and ensure locks operate correctly.

3.4 INSTALLING STEEL AND WOOD DOORS, INCLUDING HARDWARE

.1 Install and adjust all doors specified on section 08 00 01 – Door and frames schedule, 08 11 00 – Metal doors and frames and their designated hardware, including all drillings, mortises, etc. required by the work when unprepared. Install all items according to manufacturer's templates and instructions.

.2 Receive complete instructions and required installation templates from door and frame manufacturer as prescribed.

.3 Install door vents as shown in drawings, specifications and/or schedules.

.4 If the door stopper touch the tie rod, place the door stopper so that it hits the bottom of the tie rod.

.5 Bumper must stop the door at 130mm from the wall and be placed at 100mm from the door edge.

.6 When not premade, all drilling required for the hardware installation must be performed by the hardware installer on site, using the templates provided for each item.

.7 All hardware will be installed using a manual or electrical screwdriver with a clutch only; in order to avoid the crumbling of the threads and in impression of the screw head. Any damage, misaligned or broken screw head will be replaced.

.8 When installing hardware, the installer will ensure that the door and frames are equipped with all required noise absorbers.

.9 Installation steps: some painting and/or dying, and/or varnish work must be done during installation of the hardware. The installation will follow the following steps for wood doors and frames
- .1 Installer will install doors in framing and perform all required drilling and cutting.
- .2 Installer will hang the doors in its framing using the hinges.
- .3 Apply primer and top coat on doors and frames while protecting visible parts of the hardware.
- .4 The installer completes installation of all hardware and verifies operations.
- .5 Painter applies finish coat to doors and frames.

.10 All hardware must be aplomb, firmly anchored and adjusted according to the intent operation.

.11 Provide falling sill 16mm from the edge of the door on the lock side.

.12 Adjust moving parts so that the door function smoothly.

.13 Attach the side panel using concealed anchors.

3.5 ADJUSTING

.1 Adjust door hardware, operators, closures and controls for optimum, smooth operating condition, safety and for weather tight closure.

.2 Lubricate hardware, operating equipment and other moving parts.

.3 Adjust door hardware to ensure tight fit at contact points with frames.

3.6 CLEANING

.1 Progress Cleaning: clean in accordance with Section 01 74 11 - Cleaning.
- .1 Leave Work area clean at end of each day.
- .2 Clean hardware with damp rag and approved non-abrasive cleaner, and polish hardware in accordance with manufacturer's instructions.
- .3 Remove protective material from hardware items where present.
- .4 Final Cleaning: upon completion remove surplus materials, rubbish, tools and equipment in accordance with Section 01 74 11 - Cleaning.

.2 Waste Management: separate waste materials for reuse or recycling in accordance with Section 01 74 21 - Construction/Demolition Waste Management and Disposal.
- .1 Remove recycling containers and bins from site and dispose of materials at appropriate facility.

3.7 DEMONSTRATION

.1 Keying System Setup and Cabinet:
- .1 Set up key control system with file key tags, duplicate key tags, numerical index, alphabetical index and key change index, label shields, control book and key receipt cards.
- .2 Place file keys and duplicate keys in key cabinet on their respective hooks.
- .3 Lock key cabinet and turn over key to Departmental Representative.

.2 Maintenance Staff Briefing:
- .1 Brief maintenance staff regarding:
  - .1 Proper care, cleaning, and general maintenance of projects complete hardware.
  - .2 Description, use, handling, and storage of keys.
  - .3 Use, application and storage of wrenches for door closers, locksets and fire exit hardware.

.3 Demonstrate operation, operating components, adjustment features, and lubrication requirements.

3.8 PROTECTION

.1 Protect installed products and components from damage during construction.

.2 Repair damage to adjacent materials caused by door hardware installation.

PART 4 DOOR HARDWARE SCHEDULE

Groupe / Hardware set 1 / Porte / Door : 601-05

Dépôt / Storeroom			
Qté Qty	**Description**	**Fini Finish**	**Manufacturier Manufacturer**
4	Charnières mortaises / Hinges TA714 114mm x 101mm NRP	652	MCKINNEY
1	Serrure cylindrique fonction dépôt Storeroom cylindrical lock CL3157 NZD x prep.Abloy	626	CORBIN/RUSSWIN
1	Noyau / Core CY408**T** Protec 2 x EMK	626	ABLOY
1	Ferme-porte / Door closer DC6200	689	CORBIN/RUSSWIN
1	Butoir / Door stop 415	626	ROCKWOOD
1	Bourrelet d'étanchéité / Perimeter gasketing S773GR x 20'		PEMKO
1	Seuil tombant /Automatic door bottom PDB411AE x 914mm	719	PEMKO

Groupe / Hardware set 2 / Porte / Door : 601-09 601-15 601-17

Bureau / Office			
Qté Qty	**Description**	**Fini Finish**	**Manufacturier Manufacturer**
4	Charnières mortaises / Hinges TA714 114mm x 101mm NRP	652	MCKINNEY
1	Serrure cylindrique fonction bureau Office cylindrical lock CL3161 NZD x prep.Abloy	626	CORBIN/RUSSWIN
1	Noyau / Core CY408**T** Protec 2 x EMK	626	ABLOY
1	Butoir / Door stop 416	626	ROCKWOOD
1	Bourrelet d'étanchéité / Perimeter gasketing S773GR x 20'		PEMKO
1	Seuil tombant /Automatic door bottom PDB411AE x 914mm	719	PEMKO

Note: The specified quantities are the unit quantities required at each one of the doors indicated in reference.

Groupe / Hardware set 3 / Porte / Door : 601-11 601-14 601-16 601-18 601-19

Classe / Classroom			
Qté Qty	**Description**	**Fini Finish**	**Manufacturier Manufacturer**
4	Charnières mortaises / Hinges TA714 114mm x 101mm NRP	652	MCKINNEY
1	Serrure cylindrique fonction classe Classroom cylindrical lock CL3155 NZD x prep.Abloy	626	CORBIN/RUSSWIN
1	Noyau / Core CY408**T** Protec 2 x EMK	626	ABLOY
1 1	Butoir / Door stop 415 Ou / Or Bras d'arrêt encastré / Concealed overhead door stop 2-336 *(portes / doors 601-18 601-19)*	626 630	ROCKWOOD RIXSON
1	Bourrelet d'étanchéité / Perimeter gasketing S773GR x 20'		PEMKO
1	Seuil tombant /Automatic door bottom PDB411AE x 914mm	719	PEMKO
1	Contact magnétique / Door position switch DPS-W/M-GY *(portes / doors 601-18 601-19)*		SECURITRON

Groupe / Hardware set 3.1 / Porte / Door : 601-21 601-22 601-23 601-24

All the doors in groupe / hardware set 3.1 have a **ULC 45 minutes** and the hardware must be certified **Fire rated.**

Classe / Classroom			
Qté Qty	**Description**	**Fini Finish**	**Manufacturier Manufacturer**
4	Charnières mortaises / Hinges TA714 114mm x 101mm NRP	652	MCKINNEY
1	Serrure cylindrique fonction classe Classroom cylindrical lock CL3155 NZD x prep.Abloy	626	CORBIN/RUSSWIN
1	Noyau / Core CY408**T** Protec 2 x EMK	626	ABLOY
1	Ferme-porte / Door closer DC6200	689	CORBIN/RUSSWIN
1	Butoir / Door stop 415	626	ROCKWOOD
1	Bourrelet d'étanchéité / Perimeter gasketing S773GR x 20'		PEMKO
1	Seuil tombant /Automatic door bottom PDB411AE x 914mm	719	PEMKO

Note: The specified quantities are the unit quantities required at each one of the doors indicated in reference.

Groupe / Hardware set 4 / Porte / Door : 601-03A 601-03B

Contrôle			
Qté Qty	**Description**	**Fini Finish**	**Manufacturier Manufacturer**
8	Charnières mortaises / Hinges TA714 114mm x 101mm NRP	652	MCKINNEY
2	Verrous manuels encastrés 555 1/305mm bas 1/610mm haut	626	ROCKWOOD
1	Gâche anti-poussière 570	626	ROCKWOOD
1	Pêne dormant / Deadlock DL4117	626	CORBIN/RUSSWIN
1	Cylindre / Cylinder CY415**T** Protec 2 x EMK	626	ABLOY
2	Loquet à rouleau / Roller latch 591	626	ROCKWOOD
2	Jeu de poignées encastrées / Flush pull set 94P x 94L	630	ROCKWOOD
2	Bras d'arrêt surface / Surface overhead stop 10-336	630	RIXSON
1	Astragale sécuritaire / Security astragal 357SS x 96''	630	PEMKO
2	Contact magnétique / Door position switch DPS-W/M-GY		SECURITRON

Note: The specified quantities are the unit quantities required at each one of the doors indicated in reference.

Groupe / Hardware set 5 / Porte / Door : 600-01 609

Door 609 in groupe / hardware set 5 has a **ULC 45 minutes** and the hardware must be certified **Fire rated.**

Dépôt / Storeroom			
Qté Qty	**Description**	**Fini Finish**	**Manufacturier Manufacturer**
4	Charnières mortaises / Hinges TA714 114mm x 101mm NRP	652	MCKINNEY
1	Serrure mortaise fonction dépôt / Storeroom mortise lock ML2059-SP NSA 707F58 x CMK	626	CORBIN/RUSSWIN
1	Cylindre / Cylinder CY415**T** Protec 2 x EMK	626	ABLOY
1	Ferme-porte / Door closer DC6200	689	CORBIN/RUSSWIN
1	Butoir / Door stop 415	626	ROCKWOOD
1	Contact magnétique / Door position switch DPS-W/M-GY		SECURITRON
1	Gâche électrique / Electric strike F2164	630	RCI
1	Contrôle d'accès : lecteur de carte, boîtier d'alimentation et de contrôle, requête de sortie Access control : card reader, power and control box, request to exit		PAR AUTRE BY OTHER

Note: The specified quantities are the unit quantities required at each one of the doors indicated in reference.

Groupe / Hardware set 6 / Porte / Door : 601-02B 601-04B 601-06B 601-07B

Dépôt / Storeroom			
Qté Qty	**Description**	**Fini Finish**	**Manufacturier Manufacturer**
4	Charnières mortaises / Hinges TA714 114mm x 101mm NRP	652	MCKINNEY
1	Serrure mortaise fonction dépôt / Storeroom mortise lock ML2059-SP NSA x 707F58 x CMC / CMK	626	CORBIN/RUSSWIN
1	Cylindre / Cylinder CY415**T** Protec 2 x EMK	626	ABLOY
1	Ferme-porte / Door closer DC6210 *(regular or parallel)*	689	CORBIN/RUSSWIN
1	Butoir / Door stop 415 ou / or 445H	626	ROCKWOOD
1	Bourrelet d'étanchéité / Perimeter gasketing S773GR x 20'		PEMKO
1	Seuil tombant /Automatic door bottom PDB411AE x 914mm	719	PEMKO
1	Contact magnétique / Door position switch DPS-W/M-GY		SECURITRON
1	Gâche électrique / Electric strike F2164	630	RCI
1	Protège-pêne / Strike latch guard 940-LG	630	RCI
1	Contrôle d'accès : lecteur de carte, boîtier d'alimentation et de contrôle, requête de sortie Access control : card reader, power and control box, request to exit		PAR AUTRE BY OTHER

Groupe / Hardware set 7 / Porte / Door : 601-12

Dépôt / Storeroom			
Qté Qty	**Description**	**Fini Finish**	**Manufacturier Manufacturer**
4	Charnières mortaises / Hinges TA714 114mm x 101mm NRP	652	MCKINNEY
1	Serrure mortaise fonction dépôt Storeroom mortise lock ML2059-SP NSA 707F58 x CMK	626	CORBIN/RUSSWIN
1	Cylindre / Cylinder CY415**T** Protec 2 x EMK	626	ABLOY
1	Ferme-porte / Door closer DC6200	689	CORBIN/RUSSWIN
1	Plaque de protection K1050 B4E SA 203mm x 865mm	630	ROCKWOOD
1	Butoir / Door stop 415	626	ROCKWOOD

Note: The specified quantities are the unit quantities required at each one of the doors indicated in reference.

Groupe / Hardware set 8 / Porte / Door : 601-01A 601-01B 601-20A 601-20B 603-01B 605-01A 605-01B 607

Dépôt / Storeroom			
Qté Qty	**Description**	**Fini Finish**	**Manufacturier Manufacturer**
4	Charnières mortaises / Hinges TA714 114mm x 101mm NRP	652	MCKINNEY
1	Serrure mortaise fonction dépôt Storeroom mortise lock ML2059-SP NSA 707F58 CMC / CMK	626	CORBIN/RUSSWIN
1	Cylindre / Cylinder CY415**T** Protec 2 x EMK	626	ABLOY
1	Ferme-porte / Door closer DC6210 *(regular or parallel)*	689	CORBIN/RUSSWIN
1	Plaque de protection K1050 B4E SA 203mm x 865mm	630	ROCKWOOD
1	Butoir / Door stop 415	626	ROCKWOOD
1	Contact magnétique / Door position switch DPS-W/M-GY		SECURITRON
1	Gâche électrique / Electric strike F2164	630	RCI
1	Protège-pêne / Strike latch guard 940-LG	630	RCI
1	Contrôle d'accès : lecteur de carte, boîtier d'alimentation et de contrôle, requête de sortie Access control : card reader, power and control box, request to exit		PAR AUTRE BY OTHER

Note: The specified quantities are the unit quantities required at each one of the doors indicated in reference.

Groupe / Hardware set 9 / Porte / Door : 601-02A 601-04A 601-06A 601-07A

Dépôt / Storeroom			
Qté Qty	**Description**	**Fini Finish**	**Manufacturier Manufacturer**
4	Charnières mortaises / Hinges TA714 114mm x 101mm NRP	652	MCKINNEY
1	Serrure mortaise fonction dépôt Storeroom mortise lock ML2059-SP NSA x 707F58 CMC / CMK	626	CORBIN/RUSSWIN
1	Cylindre / Cylinder CY415**T** Protec 2 x EMK	626	ABLOY
1	Ferme-porte / Door closer DC6200	689	CORBIN/RUSSWIN
1	Butoir / Door stop 415	626	ROCKWOOD
1	Bourrelet d'étanchéité / Perimeter gasketing S773GR x 20'		PEMKO
1	Seuil tombant /Automatic door bottom PDB411AE x 914mm	719	PEMKO
1	Contact magnétique / Door position switch DPS-W/M-GY		SECURITRON
1	Gâche électrique / Electric strike F2164	630	RCI
1	Contrôle d'accès : lecteur de carte, boîtier d'alimentation et de contrôle, requête de sortie Access control : card reader, power and control box, request to exit		PAR AUTRE BY OTHER

Note: The specified quantities are the unit quantities required at each one of the doors indicated in reference.

Groupe / Hardware set 10 / Porte / Door : 603-02 603-04

All the doors in groupe / hardware set 10 have a **ULC 45 minutes** and the hardware must be certified **Fire rated.**

Contrôle d'accès / Access control			
Qté Qty	**Description**	**Fini Finish**	**Manufacturier Manufacturer**
4	Charnières mortaises / Hinges TA714 114mm x 101mm NRP	652	MCKINNEY
1	Serrure mortaise fonction dépôt / Storeroom mortise lock ML2059-SP NSA x 707F58 CMC / CMK	626	CORBIN/RUSSWIN
1	Cylindre / Cylinder CY415**T** Protec 2 x EMK	626	ABLOY
1	Ferme-porte / Door closer DC6200	689	CORBIN/RUSSWIN
1	Butoir / Door stop 441H	626	ROCKWOOD
1	Contact magnétique / Door position switch DPS-W/M-GY		SECURITRON
1	Gâche électrique / Electric strike F2164	630	RCI
1	Protège-pêne / Strike latch guard 940-LG	630	RCI
1	Contrôle d'accès : lecteur de carte, boîtier d'alimentation et de contrôle, requête de sortie Access control : card reader, power and control box, request to exit		PAR AUTRE BY OTHER

Note: The specified quantities are the unit quantities required at each one of the doors indicated in reference.

Groupe / Hardware set 11 / Porte / Door : 601-25A 601-25B 601-26 603 603-01A 603-03

The doors 601-25A, 601-26, 603 and 603-01A in groupe / hardware set 11 have a **ULC 45 minutes** and the hardware must be certified **Fire rated.**

Contrôle d'accès / Access control			
Qté Qty	**Description**	**Fini Finish**	**Manufacturier Manufacturer**
4	Charnières mortaises / Hinges TA714 114mm x 101mm NRP	652	MCKINNEY
4	Charnières mortaises / Hinges T4A3786 127mm x 114mm NRP *(601-26, 601-25B)*	652	MCKINNEY
1	Serrure mortaise fonction dépôt / Storeroom mortise lock ML2059-SP NSA 707F58 x CMC / CMK	626	CORBIN/RUSSWIN
1	Cylindre / Cylinder CY415**T** Protec 2 x EMK	626	ABLOY
1	Ferme-porte / Door closer DC6210 *(regular or parallel)*	689	CORBIN/RUSSWIN
1	Plaque de protection K1050 B4E SA 203mm x 865mm K1050 B4E SA 203mm x 1016mm *(601-26, 601-25B)*	630	ROCKWOOD
1	Butoir / Door stop 441H	626	ROCKWOOD
1	Contact magnétique / Door position switch DPS-W/M-GY		SECURITRON
1	Gâche électrique / Electric strike F2164	630	RCI
1	Protège-pêne / Strike latch guard 940-LG *(603-01A, 601-26)*	630	RCI
1	Contrôle d'accès : lecteur de carte, boîtier d'alimentation et de contrôle, requête de sortie Access control : card reader, power and control box, request to exit		PAR AUTRE BY OTHER

Note: The specified quantities are the unit quantities required at each one of the doors indicated in reference.

END OF SECTION

PART 1 – GENERAL

1.1 RELATED REQUIREMENTS

.1 Section 08 11 00 – Metal doors and frames.

.2 Section 08 14 16 – Flush wooden door.

1.2 REFERENCES

.1 ASTM International
- .1 ASTM C 542-05, Standard Specification for Lock-Strip Gaskets.
- .2 ASTM D 790-07e1, Standard Test Methods for Flexural Properties of Unreinforced and Reinforced Plastics and Electrical Insulating Materials.
- .3 ASTM D 1003-07e1, Standard Test Method for Haze and Luminous Transmittance of Plastics.
- .4 ASTM D 1929-96(R2001)e1, Standard Test Method for Determining Ignition Temperature of Plastics.
- .5 ASTM D 2240-05, Standard Test Method for Rubber Property - Durometer Hardness.
- .6 ASTM E 84-10, Standard Test Method for Surface Burning Characteristics of Building Materials.
- .7 ASTM E 330-02, Standard Test Method for Structural Performance of Exterior Windows, Doors, Skylights and Curtain Walls by Uniform Static Air Pressure Difference.
- .8 ASTM F 1233-08, Standard Test Method for Security Glazing Materials and Systems.

.2 Canadian General Standards Board (CGSB)
- .1 CAN/CGSB-12.1-M90, Tempered or Laminated Safety Glass.
- .2 CAN/CGSB-12.2-M91, Flat, Clear Sheet Glass.
- .3 CAN/CGSB-12.3-M91, Flat, Clear Float Glass.
- .4 CAN/CGSB-12.4-M91, Heat Absorbing Glass.
- .5 CAN/CGSB-12.6-M91, Transparent (One-Way) Mirrors.
- .6 CAN/CGSB-12.8-97, Insulating Glass Units.
- .7 CAN/CGSB-12.8-97 (Amendment), Insulating Glass Units.
- .8 CAN/CGSB-12.9-M91, Spandrel Glass.
- .9 CAN/CGSB-12.10-M76, Glass, Light and Heat Reflecting.
- .10 CAN/CGSB-12.11-M90, Wired Safety Glass.
- .11 CAN/CGSB-12.12-M90, Plastic Safety Glazing Sheets.
- .12 CAN/CGSB-12.13-M91, Patterned Glass.

.3 Environmental Choice Program (ECP)
- .1 CCD-045-95(R2005), Sealants and Caulking Compounds.

.4 Glass Association of North American (GANA)
- .1 GANA Glazing Manual - 2008.
- .2 GANA Laminated Glazing Reference Manual - 2009.

1.3 ADMINISTRATIVE REQUIREMENTS

.1 Pre-Installation Meetings:
- .1 Convene pre-installation meeting 1 week prior to beginning work of this Section and on-site installation, with Contractor's Representative and Departmental Representative in accordance with Section 01 31 19 - Project Meetings to:
  - .1 Verify project requirements.

.2 Review installation and substrate conditions.
.3 Co-ordination with other building subtrades.
.4 Review manufacturer's written installation instructions and warranty requirements.

.2 Arrange for site visit with Departmental Representative prior to start of Work to examine existing site conditions adjacent to demolition Work.

.3 Hold project meetings once every 2 weeks.

.4 Ensure key personnel, site supervisor, project manager and subcontractor representatives attend.

.5 Departmental Representative will submit written notification of change to meeting schedule established upon contract award 24 hours prior to scheduled meeting.

1.4 ACTION AND INFORMATIONAL SUBMITTALS

.1 Submit in accordance with Section 01 33 00 - Submittal Procedures.

.2 Product Data:
.1 Submit manufacturer's instructions, printed product literature and data sheets for glass, sealants, and glazing accessories and include product characteristics, performance criteria, physical size, finish and limitations.

.3 Shop Drawings:
.1 Submit drawings stamped and signed by professional engineer registered or licensed in Province of Quebec, Canada.

.4 Samples:
.1 Submit for review and acceptance of each unit.
.2 Samples will be returned for inclusion into work.
.3 Submit duplicate of 300mm x 300mm size samples of the glazing and sealant material.

.5 Certificates: submit product certificates signed by manufacturer certifying materials comply with specified performance characteristics and criteria and physical requirements.

.6 Test Reports: certified test reports showing compliance with specified performance characteristics and physical properties.
.1 Submit testing and analysis of glass under provisions of Section 01 45 00 - Quality Control.
.2 Submit shop inspection and testing for glass.

.7 Sustainable Design Submittals:
.1 Construction Waste Management:
.1 Submit project Waste Management Plan highlighting recycling and salvage requirements.
.2 Submit calculations on end-of-project recycling rates, salvage rates, and landfill rates demonstrating that 50% of construction wastes were recycled or salvaged.
.2 Recycled Content:
.1 Submit listing of recycled content products used, including details of required percentages or recycled content materials and products, showing their costs and percentages of post-consumer and post-industrial content, and total cost of materials for project.

.3 Low-Emitting Materials:
.1 Submit listing of adhesives and sealants used in building, showing compliance with VOC and chemical component limits or restrictions requirements.

1.5 CLOSEOUT SUBMITTALS

.1 Submit in accordance with Section 01 78 00 - Closeout Submittals.

.2 Operation and Maintenance Data: submit operation and maintenance data for glazing for incorporation into manual.

1.6 QUALITY ASSURANCE

.1 Certificates: product certificates signed by manufacturer certifying materials comply with specified performance characteristics and criteria and physical requirements.

.2 Mock-ups:
.1 Construct mock-ups in accordance with Section 01 45 00 - Quality Control.
.2 Construct mock-up to include glass glazing, and perimeter air barrier and vapour retarder seal.
.3 Mock-up will be used:
.1 To judge quality of work, substrate preparation, operation of equipment and material application.
.4 Locate where indicated.
.5 Allow 24hours for inspection of mock-up before proceeding with work.
.6 When accepted, mock-up will demonstrate minimum standard of quality required for this work. Approved mock-up may remain as part of finished work.

1.7 DELIVERY, STORAGE AND HANDLING

.1 Deliver, store and handle materials in accordance with Section 01 61 00 - Common Product Requirements and with manufacturer's written instructions.

.2 Delivery and Acceptance Requirements: deliver materials to site in original factory packaging, labelled with manufacturer's name and address.

.3 Storage and Handling Requirements:
.1 Store materials off ground, indoors, in dry location and in accordance with manufacturer's recommendations in clean, dry, well-ventilated area.
.2 Store and protect glazing and frames from nicks, scratches, and blemishes.
.3 Protect prefinished aluminum surfaces with wrapping strippable coating.
.4 Replace defective or damaged materials with new.

.4 Develop Construction Waste Management Plan related to Work of this Section and in accordance with Section.

.5 Packaging Waste Management: remove for reuse and return by manufacturer of pallets, crates, padding, and packaging materials as specified in Construction Waste Management Plan or Waste Reduction Workplan in accordance with Section 01 74 21 - Construction/Demolition Waste Management and Disposal.

1.8 AMBIENT CONDITIONS

.1 Ambient Requirements:
- .1 Install glazing when ambient temperature is 10 degrees C minimum. Maintain ventilated environment for 24 hours after application.
- .2 Maintain minimum ambient temperature before, during and 24 hours after installation of glazing compounds.

PART 2 – PRODUCTS

2.1 MATERIALS

.1 Design Criteria:
- .1 Ensure continuity of building enclosure vapour and air barrier using glass and glazing materials as follow:
  - .1 Utilize inner light of multiple light sealed units for continuity of air and vapour seal.

.2 Flat Glass:
- .1 Safety glass de type VS1: to CAN/CGSB-12.1, transparent, 6 mm thick.
  - .1 Type 2-tempered.
  - .2 Class B-float.
  - .3 Category 1.
- .2 Safety glass de type VS2 with pattern: to CAN/CGSB-12.1, transparent, 6 mm thick.
  - .1 Type 2-tempered.
  - .2 Class B-float.
  - .3 Category 1.
  - .4 Acceptable product: Masterligne from Masterglas line distributed by Euroverre or approved equivalent.
- .3 Wired glass: to CAN/CGSB-12.11, 6 mm thick.
  - .1 Type 1-polished both sides (transparent).
  - .2 Wire mesh styles 3-square.
  - .3 Glazing bead shall be tamperproof and non-removable.
- .4 Glass for observation window:
  - .1 Glass: double glazing on interior wall for security occupied zone by CRA so employees see inside the room.
  - .2 Type: one of the glass must have a mirror film.
  - .3 The two glass will be as far apart as possible from another,
  - .4 Category: C, tempered glass.
  - .5 Shape: 1, float.
  - .6 For dimensions and height refer to drawings.

2.2 ACCESSORIES

.1 Setting blocks: neoprene, 80-90 Shore A durometer hardness to ASTM D 2240, suit glazing method, glass light weight and area.

.2 Spacer shims: neoprene, 50-60 Shore A durometer hardness to ASTM D 2240, 75 mm long x one half height of glazing stop x thickness to suit application. Self-adhesive on one face.

.3 Glazing tape:
.1 Preformed butyl compound 10-15 Shore A durometer hardness to ASTM D 2240; coiled on release paper; black colour.

.4 Glazing clips: manufacturer's standard type.

PART 3– EXECUTION

3.1 EXAMINATION

.1 Verification of Conditions: verify conditions of substrates previously installed under other Sections or Contracts are acceptable for glazing installation in accordance with manufacturer's written instructions.
.1 Verify that openings for glazing are correctly sized and within tolerance.
.2 Verify that surfaces of glazing channels or recesses are clean, free of obstructions, and ready to receive glazing.
.3 Visually inspect substrate in presence of Departmental Representative.
.4 Inform Departmental Representative of unacceptable conditions immediately upon discovery.
.5 Proceed with installation only after unacceptable conditions have been remedied [and after receipt of written approval to proceed from Departmental Representative.

3.2 PREPARATION

.1 Clean contact surfaces with solvent and wipe dry.

.2 Seal porous glazing channels or recesses with substrate compatible primer or sealer.

.3 Prime surfaces scheduled to receive sealant.

3.3 INSTALLATION: EXTERIOR - DRY METHOD (PREFORMED GLAZING)

.1 Manufacturer's Instructions: comply with manufacturer's written data, including product technical bulletins, product catalogue installation instructions, product carton installation instructions, and data sheets.

.2 Perform work in accordance with GANA Glazing Manual and GANA Laminated Glazing Reference Manual for glazing installation methods.

.3 Cut glazing tape to length; install on glazing light. Seal corners by butting tape and sealing junctions with sealant.

.4 Place setting blocks at 1/4points, with edge block maximum 150 mm from corners.

.5 Rest glazing on setting blocks and push against fixed stop with sufficient pressure to attain full contact.

.6 Install removable stops without displacing glazing tape. Exert pressure for full continuous contact.

.7 Trim protruding tape edge.

3.4 INSTALLATION: PLASTIC FILM

.1 Install plastic film with adhesive, applied in accordance with film manufacturer's instructions.

.2 Place without air bubbles, creases or visible distortion.

.3 Fit tight to glass perimeter with razor cut edge.

3.5 CLEANING

.1 Progress Cleaning: clean in accordance with Section 01 74 11 - Cleaning.
- .1 Leave Work area clean at end of each day.
  - .1 Remove traces of primer, caulking.
  - .2 Remove glazing materials from finish surfaces.
  - .3 Remove labels.
  - .4 Clean glass and mirrors using approved non-abrasive cleaner in accordance with manufacturer's instructions.
- .2 Final Cleaning: upon completion remove surplus materials, rubbish, tools and equipment in accordance with Section 01 74 11 - Cleaning.

.2 Waste Management: separate waste materials for reuse and recycling in accordance with Section 01 74 21 - Construction/Demolition Waste Management and Disposal.
- .1 Remove recycling containers and bins from site and dispose of materials at appropriate facility.

3.6 PROTECTION

.1 Protect installed products and components from damage during construction.

.2 After installation, mark each light with an "X" by using removable plastic tape or paste.
- .1 Do not mark heat absorbing or reflective glass units.

.3 Repair damage to adjacent materials caused by glazing installation.

END OF SECTION

PART 1 – GENERAL

1.1 RELATED REQUIREMENTS

.1 Section 02 41 99 – Demolition for minor work.

.2 Section 06 08 99 – Rough carpentry for minor works.

.3 Section 09 91 23 – Interior painting.

.4 Section 10 22 19 – Post and panel demountable partition.

1.2 REFERENCES

.1 ASTM International
- .1 ASTM C 1396/C 1396M-09a, Standard Specification for Gypsum Wallboard.
- .2 ASTM C 475/C 475M-02(2007), Standard Specification for Joint Compound and Joint Tape for Finishing Gypsum Board.
- .3 ASTM C 514-04(2009)e1, Standard Specification for Nails for the Application of Gypsum Board.
- .4 ASTM C 645-09a, Standard Specification for Nonstructural Steel Framing Members.
- .5 ASTM C 754-09a, Standard Specification for Installation of Steel Framing Members to Receive Screw-Attached Gypsum Panel Products.
- .6 ASTM C 840-08, Standard Specification for Application and Finishing of Gypsum Board.
- .7 ASTM C 954-10, Standard Specification for Steel Drill Screws for the Application of Gypsum Panel Products or Metal Plaster Bases to Steel Studs from 0.033 in. (0.84 mm) to 0.122 in. (2.84 mm) in Thickness.
- .8 ASTM C 1002-07, Standard Specification for Steel Self-Piercing Tapping Screws for the Application of Gypsum Panel Products or Metal Plaster Bases to Wood Studs or Steel Studs.
- .9 ASTM C 1047-10, Standard Specification for Accessories for Gypsum Wallboard and Gypsum Veneer Base.
- .10 ASTM C 1178/C 1178M-08, Standard Specification for Glass Mat Water-Resistant Gypsum Backing Board.

.2 Underwriters' Laboratories of Canada (ULC)
- .1 CAN/ULC-S102-07, Standard Method of Test for Surface Burning Characteristics of Building Materials and Assemblies.

1.3 ACTION AND INFORMATIONAL SUBMITTALS

.1 Submit in accordance with Section 01 33 00 - Submittal Procedures.

.2 Product Data:
- .1 Submit manufacturer's instructions, printed product literature and data sheets for gypsum, framing, sealants and include product characteristics, performance criteria, physical size, finish and limitations.

.3 Samples:
- .1 Submit for review and acceptance of each unit.

.4 Test and Evaluation Reports: submit test reports in accordance with Section 01 45 00 - Quality Control, from approved independent testing laboratory, certifying partition system complies with sound transmission rating, fire-resistance rating as specified.

1.4 INSTALLATION REFERENCE

.1 Unless otherwise stated and more restrictive documents, perform work in accordance with recommendations contained in «Gypsum Construction Manual CGC», latest edition.

1.5 DELIVERY, STORAGE AND HANDLING

.1 Deliver, store and handle materials in accordance with Section 01 61 00 - Common Product Requirements and with manufacturer's written instructions.

.2 Delivery and Acceptance Requirements: deliver materials to site in original factory packaging, labelled with manufacturer's name and address.

.3 Storage and Handling Requirements:
- .1 Store materials off ground, indoors, in dry location and in accordance with manufacturer's recommendations in clean, dry, well-ventilated area.
- .2 Store materials inside, level, under cover. Protect from weather, damage from construction operations and other causes, in accordance with manufacturer's printed instructions.
- .3 Handle materials to prevent damage to edges or surfaces. Protect metal accessories and trim from being bent or damaged.
- .4 Store and protect partition materials from nicks, scratches, and blemishes.
- .5 Replace defective or damaged materials with new.

1.6 WORK

.1 The work mentioned in this present section applies only to fixed existing partitions to remain and repair.

PART 2– PRODUCTS

2.1 MATERIALS

.1 Performance / Design Criteria:
- .1 Partition assembly to be fire resistance rated, refer to plans..

.2 Non-structural Metal Framing:
- .1 As existing.

.3 Gypsum Board:
- .1 Standard board: to ASTM C 1396/C 1396M regular, 16 mm thick and Type X, 1200 mm wide x maximum practical length, ends square cut, edges tapered.
- .2 Metal furring runners, hangers, tie wires, inserts, anchors: as existing.
- .3 Steel drill screws: to ASTM C 1002.
- .4 «V» molding and/or control joint: galvanized steel sheet, thickness 0.53, width 44, opening 6.4 x 11mm deep covered with protective tape.

.5 Semi-rigid fireproof, soundproofing cushion: non-combustible acoustic matress insulation made of mineral fiber (consisting of basalt and scories): ROXUL AFB from ROXUL or equivalent, in accordance with ASTM C 423, CAN/ULC-S702-97 and CAN4 S114, thickness as existing. To be used in soundproof and fire-resistant partition.

2.2 ACCESSORIES

.1 Acoustical insulation: type recommended by manufacturer to achieve STC rating specified. Type as existing.

.2 Sealants: in accordance with Section 07 92 00 - Joint Sealants to ASTM C 475.
- .1 VOC limit 250 g/L maximum to SCAQMD Rule 1168.

.3 Insulating strip: rubberized, moisture resistant, 3 mm thick closed cell neoprene strip, 12 mm wide, with self sticking permanent adhesive on one face, lengths as required.

.4 Adhesive for studs: Complies with CAN/CGSB-71.25 and ASTM C557.

.5 Laminating adhesive: as recommended by manufacturer, asbestos free.

.6 Extrusion molding, corner reinforcements, shrinkage joints and edges: in accordance with ASTM C 1047, galvanized metal, electroplated, 0.5mm thick, perforated wings, once piece.

.7 Sealant: as per requirements of 07 92 00 – Sealants for seals.

.8 Polyethylene: Complies with CAN/CGSB-51.34, type 2.

.9 Joint paste: complies with CAN/CGSB-51.34, type 2.

.10 Joint tape.

PART 3 – EXECUTION

3.1 EXAMINATION

.1 Verification of Conditions: verify conditions of substrates previously installed under other Sections or Contracts are acceptable for product installation in accordance with manufacturer's written instructions prior to partition installation.
- .1 Visually inspect substrate in presence of Departmental Representative.
- .2 Inform Departmental Representative of unacceptable conditions immediately upon discovery.
- .3 Proceed with installation only after unacceptable conditions have been remedied [and after receipt of written approval to proceed from Departmental Representative.

3.2 ERECTION OF FRAMING

.1 Install steel framing members to receive screw-attached gypsum board in accordance with ASTM C 754 except where specified otherwise.

.2 Unless otherwise stated in the plans or specifications, manufacturer must respect the most recent recommendations of the gypsum system.
- .1 All new partitions are gypsum board partitions (with visible end-butt joints without taped joints), in accordance with section 10 22 19 – Post and panel demountable partition.
- .2 The plaster finishing (taped joints) of gypsum boards applies only to horizontal joints

above the dropped ceiling and for the continuous gypsum board of wall sections D, E, F, G, G', H, I et I'. The plaster finishing also applies to the furring in room 607 (behind the counter with sink), and the refurbishing of existing gypsum walls with taped joints.

.3 Align partition tracks at floor and ceiling and secure at 600 mm on centre maximum.

.4 Place studs vertically at 400 mm on centre and maximum of 50 mm from abutting walls, and at each side of openings and corners. Position studs in tracks at floor and ceiling. Cross brace steel studs as required to provide rigid installation to manufacturer's instructions.

.5 Erect metal studding to tolerance of 1:1000.

.6 Co-ordinate simultaneous erection of studs with installation of service lines. When erecting studs ensure web openings are aligned.

.7 Include two studs extending from floor to ceiling at each side of openings wider than stud centres specified. Secure studs together, 50 mm apart using column clips or other approved means of fastening placed alongside frame anchor clips.

.8 Install heavy gauge single jamb studs at openings.

.9 Erect track at head of door/window openings and sills of sidelight/window openings to accommodate intermediate studs. Secure track to studs at each end, in accordance with manufacturer's instructions. Install intermediate studs above and below openings in same manner and spacing as wall studs.

.10 Include 40 mm stud or furring channel secured between studs for attachment of fixtures behind lavatory basins, toilet and bathroom accessories, and other fixtures including grab bars and towel rails, attached to steel stud partitions.

.11 Install steel studs or furring channel between studs for attaching electrical and other boxes.

.12 Extend partitions to ceiling height except where indicated.

3.3 ERECTION OF GYPSUM BOARD AND ACCESSORIES

.1 Do application and finishing of gypsum board in accordance with ASTM C 840 except where specified otherwise.

.2 Erect hangers and runner channels for suspended gypsum board ceilings in accordance with ASTM C 840 except where specified otherwise.

.3 Support light fixtures by providing additional ceiling suspension hangers within 150 mm of each corner and at maximum 600 mm around perimeter of fixture.

.4 Frame with furring channels, perimeter of openings for access panels, light fixtures, diffusers, grilles, etc..

.5 Furr for gypsum board faced vertical bulkheads within and at termination of ceilings.

.6 Furr above suspended ceilings for gypsum board fire and sound stops and to form plenum areas as indicated.

.7 Install wall furring for gypsum board wall finishes in accordance with ASTM C 840, except where specified otherwise.

.8 Install acoustical insulation and sealant in sound rated partitions to correspond with tested assembly.

.9 Install gypsum boards in direction that will minimize number of end-butt joints. Stagger end joints 250 mm minimum.

3.4 ACOUSTICAL INSULATION

.1 Install insulation inside all gypsum partition, as indicated in plans and this section.

.2 Carefully pad the cushions to leave no voids, get around, without cutting, electrical outlets, and other equipment that do not take the entire width of the partition.

.3 Insulate interior sections of steel frames.

3.5 APPLICATION

.1 Apply gypsum board after bucks, anchors, blocking, sound attenuation, electrical and mechanical work are approved.

.2 Apply single layer gypsum board to metal furring or framing using screw fasteners. Maximum spacing of screws 300 mm on centre.

3.6 INSTALLATION

.1 Erect accessories straight, plumb or level, rigid and at proper plane. Use full length pieces where practical. Make joints tight, accurately aligned and rigidly secured. Mitre and fit corners accurately, free from rough edges. Secure at 150 mm on centre using contact adhesive for full length.

.2 Install casing beads around perimeter of suspended ceilings.

.3 Install casing beads where gypsum board butts against surfaces having no trim concealing junction and where indicated. Seal joints with sealant.

.4 Install insulating strips continuously at edges of gypsum board and casing beads abutting metal window and exterior door frames, to provide thermal break.

.5 Install access doors to electrical and mechanical fixtures specified in respective sections.
.1 Rigidly secure frames to furring or framing systems.

.6 Finish face panel joints and internal angles with joint system consisting of joint compound, joint tape and taping compound installed according to manufacturer's directions and feathered out onto panel faces.

.7 Finish corner beads, control joints and trim as required with two coats of joint compound and one coat of taping compound, feathered out onto panel faces.

.8 Fill screw head depressions with joint and taping compounds to bring flush with adjacent surface of gypsum board so as to be invisible after surface finish is completed.

.9 Completed installation to be smooth, level or plumb, free from waves and other defects and ready for surface finish.

3.7 CLEANING

.1 Progress Cleaning: clean in accordance with Section 01 74 11 - Cleaning.
  .1 Leave Work area clean at end of each day.

.2 Final Cleaning: upon completion remove surplus materials, rubbish, tools and equipment in accordance with Section 01 74 11 - Cleaning.

.3 Waste Management: separate waste materials for reuse and recycling in accordance with Section 01 74 21 - Construction/Demolition Waste Management and Disposal.
  .1 Remove recycling containers and bins from site and dispose of materials at appropriate facility.

3.8 PROTECTION

.1 Protect installed products and components from damage during construction.

.2 Repair damage to adjacent materials caused by partition installation.

END OF SECTION

PART 1 – GENERAL

1.1 RELATED REQUIREMENTS

.1 Section 07 92 00 – Joint sealants.

1.2 REFERENCES

.1 American National Standards Institute (ANSI)/Ceramic Tile Institute (CTI)
- .1 ANSI A108.1-99, Specification for the Installation of Ceramic Tile (Includes ANSI A108.1A-C, 108.4-.13, A118.1-.10, ANSI A136.1).
- .2 CTI A118.3-92, Specification for Chemical Resistant, Water Cleanable Tile Setting and Grouting Epoxy and Water Cleanable Tile Setting Epoxy Adhesive (included in ANSI A108.1).
- .3 CTI A118.4-92, Specification for Latex Cement Mortar (included in ANSI A108.1).
- .4 CTI A118.5-92, Specification for Chemical Resistant Furan Resin Mortars and Grouts for Tile Installation (included in ANSI A108.1).
- .5 CTI A118.6-92, Specification for Ceramic Tile Grouts (included in ANSI A108.1).

.2 American Society for Testing and Materials International (ASTM)
- .1 ASTM C 144-04, Specification for Aggregate for Masonry Mortar.
- .2 ASTM C 207-06, Specification for Hydrated Lime for Masonry Purposes.
- .3 ASTM C 847-06, Specification for Metal Lath.
- .4 ASTM C 979-05, Specification for Pigments for Integrally Coloured Concrete.

.3 Canadian General Standards Board (CGSB)
- .1 CAN/CGSB-51.34-M86(R1988), Vapour Barrier, Polyethylene Sheet for Use in Building Construction.
- .2 CGSB 71-GP-22M-78(AMEND.), Adhesive, Organic, for Installation of Ceramic Wall Tile.
- .3 CAN/CGSB-75.1-M88, Tile, Ceramic.
- .4 CAN/CGSB-25.20-95, Surface Sealer for Floors.

.4 Canadian Standards Association (CSA International)
- .1 CSA A123.3-05, Asphalt Saturated Organic Roofing Felt.
- .2 CAN/CSA-A3000-03(R2006), Cementitious Materials Compendium (Consists of A3001, A3002, A3003, A3004 and A3005).

.5 Terrazzo Tile and Marble Association of Canada (TTMAC)
- .1 Tile Specification Guide 09 30 00 2006/2007, Tile Installation Manual.
- .2 Tile Maintenance Guide.

1.3 ACTION AND INFORMATIONAL SUBMITTALS

.1 Provide submittals in accordance with Section 01 33 00 - Submittal Procedures.

.2 Provide product data in accordance with Section 01 33 00 - Submittal Procedures.
- .1 Include manufacturer's information on:
  - .1 Ceramic tile, marked to show each type, size, and shape required.
  - .2 Chemical resistant mortar and grout (Epoxy and Furan).
  - .3 Dry-set cement mortar and grout.
  - .4 Divider strip.
  - .5 Fasteners.

.3 Ceramic on the wall (backsplash): Submit two (2) 300mm x 300mm samples for the proposed ceramic.

.4 Provide samples in accordance with Section 01 33 00 - Submittal Procedures.

1.4 QUALITY ASSURANCE

.1 Quality Assurance Submittals:
- .1 Manufacturer's Instructions: manufacturer's installation instructions.
- .2 Manufacturer's Field Reports: manufacturer's field reports specified.

1.5 SUSTAINABLE REQUIREMENTS

.1 Materials and products in accordance with Section 01 47 15 - Sustainable Requirements: Construction.

1.6 DELIVERY, STORAGE AND HANDLING

.1 Packing, shipping, handling and unloading:
- .1 Deliver, store and handle materials in accordance with Section 01 61 00 - Common Product Requirements.

.2 Waste Management and Disposal:
- .1 Separate waste materials for reuse and recycling in accordance with Section 01 74 21 - Construction/Demolition Waste Management and Disposal.

1.7 AMBIENT CONDITIONS

.1 Maintain air temperature and structural base temperature at ceramic tile installation area above 12 degrees C for 48 hours before, during, and 48 hours after, installation.

.2 Do not install tiles at temperatures less than 12 degrees C or above 38 degrees C.

.3 Do not apply epoxy mortar and grouts at temperatures below 15 degrees C or above 25 degrees C.

1.8 MAINTENANCE

.1 Extra Materials:
- .1 Provide maintenance materials in accordance with Section 01 78 00 - Closeout Submittals.
- .2 Provide minimum 10% of each type and colour of tile required for project for maintenance use. Store where directed.
- .3 Maintenance material same production run as installed material.

PART 2 – PRODUCTS

2.1 FLOOR TILE

.1 Ceramic tile type C1: tiles from serie ONYX, distributed by CERAGRES, color white and hexagonal shape (matt and glossy) or approved equivalent.

2.2 MORTAR AND ADHESIVE MATERIALS

.1 Cement: to CSA-A5, type 10.

.2 Adhesives:
- .1 Maximum VOC limit 65 g/L to SCAQMD Rule 1168.

2.3 GROUT

.1 Colouring Pigments:
- .1 Pure mineral pigments, limeproof and nonfading, complying with ASTM C 979.
- .2 Colouring pigments to be added to grout by manufacturer.
- .3 Job coloured grout are not acceptable.
- .4 Use in Commercial Cement Grout, Dry-Set Grout, and Latex Cement Grout.

.2 Cement Grout: to ANSI A108.1.
- .1 Use one part white cement to one part white sand passing a number 30 screen.

.3 Commercial Cement Grout: to CTI A118.6.

2.4 ACCESSORIES

.1 Sealant: in accordance with Section 07 92 00 - Joint Sealants.

2.5 MIXES

.1 Adhesive: dosed as manufacturer’s instructions.

.2 Mix bond and levelling coats, and grout to manufacturer's instructions.

.3 Adjust water volumes to suit water content of sand.

2.6 PATCHING AND LEVELLING COMPOUND

.1 Cement base, acrylic polymer compound, manufactured specifically for resurfacing and leveling concrete floors. Products containing gypsum are not acceptable.

.2 Have not less than the following physical properties:
- .1 Compressive strength - 25 MPa.
- .2 Tensile strength - 7 MPa.
- .3 Flexural strength - 7 MPa.
- .4 Density - 1.9.

.3 Capable of being applied in layers up to 50 mm thick, being brought to feather edge, and being trowelled to smooth finish.

.4 Ready for use in 48 hours after application.

2.7 CLEANING COMPOUNDS

.1 Specifically designed for cleaning masonry and concrete and which will not prevent bond of subsequent tile setting materials including patching and leveling compounds and elastomeric waterproofing membrane and coat.

.2 Materials containing acid or caustic material are not acceptable.

PART 3 – EXECUTION

3.1 MANUFACTURER'S INSTRUCTIONS

.1 Compliance: comply with manufacturer's written recommendations or specifications, including product technical bulletins, handling, storage and installation instructions, and datasheets.

3.2 WORKMANSHIP

.1 Do tile work in accordance with TTMAC Tile Installation Manual 2006/2007, "Ceramic Tile", except where specified otherwise.

.2 Apply tile or backing coats to clean and sound surfaces.

.3 Fit tile around corners, fitments, fixtures, drains and other built-in objects. Maintain uniform joint appearance. Cut edges smooth and even. Do not split tiles.

.4 Maximum surface tolerance 1:800.

.5 Make joints between tile uniform and approximately 1.5 mm wide, plumb, straight, true, even and flush with adjacent tile. Ensure sheet layout not visible after installation. Align patterns.

.6 Lay out tiles so perimeter tiles are minimum 1/2 size.

.7 Sound tiles after setting and replace hollow-sounding units to obtain full bond.

.8 Make internal angles square, external angles rounded.

.9 Use round edged tiles at termination of wall tile panels, except where panel abuts projecting surface or differing plane.

.10 Allow minimum 24 hours after installation of tiles, before grouting.

.11 Clean installed tile surfaces after installation and grouting cured.

3.3 FLOOR SEALER AND PROTECTIVE COATING

.1 Apply in accordance with manufacturer's instructions.

3.4 FIELD QUALITY CONTROL

.1 Manufacturer's Field Services:

.1 Provide manufacturer's field services consisting of product use recommendations and periodic site visits for inspection of product installation in accordance with manufacturer's instructions.

3.5 CLEANING

.1 Proceed in accordance with Section 01 74 11 - Cleaning.

END OF SECTION

PART 1 - GENERAL

1.1 SUMMARY

.1 Section Includes:
- .1 Materials and application of acoustical units for direct application or for application and installation within a suspended ceiling.
- .2 Sustainable requirements for construction and verification.

.2 Related Requirements
- .1 Section 09 53 00.01 – Acoustical suspension.

1.2 REFERENCES

.1 American Society for Testing and Materials International (ASTM)
- .1 ASTM C 423-02a, Standard Test Method for Sound Absorption and Sound Absorption Coefficients by the Reverberation Room Method
- .2 ASTM E 1264-98, Standard Classification for Acoustical Ceiling Products.
- .3 ASTM E 1477-98a(2003), Standard Test Method for Luminous Reflectance Factor of Acoustical Materials by Use of Integrating-Sphere Reflectometers.

.2 Canadian General Standards Board (CGSB)
- .1 CAN/CGSB-51.34-M86, Vapour Barrier, Polyethylene Sheet, for Use in Building Construction and Amendment No. 1 1988.
- .2 CAN/CGSB-92.1-M89, Sound Absorptive Prefabricated Acoustical Units.

.3 Canadian Standards Association (CSA International)
- .1 CSA B111-1974(R2003), Wire Nails, Spikes and Staples.

.4 Department of Justice Canada (Jus)
- .1 Canadian Environmental Protection Act (CEPA), 1999, c. 33.
- .2 Transportation of Dangerous Goods Act (TDGA), 1992, c. 34.

.5 Health Canada/Workplace Hazardous Materials Information System (WHMIS)
- .1 Material Safety Data Sheets (MSDS).

.6 Underwriter's Laboratories of Canada (ULC)
- .1 CAN/ULC-S102-2003, Surface Burning Characteristics of Building Materials and Assemblies.

1.3 ACTION AND INFORMATIONAL SUBMITTALS

.1 Submit samples in accordance with Section 01 33 00 - Submittal Procedures.

.2 Product Data: submit WHMIS MSDS in accordance with Section 01 47 15 - Sustainable Requirements: Construction.

.3 Co-ordinate submittal requirements and provide submittals required by Section 01 47 15 - Sustainable Requirements: Construction.

.4 Submit duplicate full size samples of each type acoustical units.

1.4 QUALITY ASSURANCE

.1 Mock-up:
- .1 Construct mock-ups in accordance with Section 01 45 00 - Quality Control.
- .2 Construct mock-up 10m² minimum of each type acoustical panel tile ceiling including [one inside corner and one outside corner.
- .3 Construct mock-up where directed.
- .4 Allow 24 hours for inspection of mock-up by Departmental Representative before proceeding with ceiling work.
- .5 When accepted, mock-up will demonstrate minimum standard for this work. Mock-up may remain as part of the finished work.

.3 Health and Safety:
- .1 Do construction occupational health and safety in accordance with Section 01 35 29.06 - Health and Safety Requirements.

1.5 DELIVERY, STORAGE AND HANDLING

.1 Protect on site stored or installed absorptive material from moisture damage.

.2 Store extra materials required for maintenance, where directed by Departmental Representative.

.3 Waste Management and Disposal:
- .1 Separate waste materials for reuse and recycling in accordance with Section 01 74 21 - Construction /Demolition Waste Management and Disposal.
- .2 Remove from site and dispose of packaging materials at appropriate recycling facilities.
- .3 Collect and separate for disposal paper, plastic, polystyrene, corrugated cardboard and packaging material in appropriate on-site bins for recycling in accordance with Waste Management Plan (WMP).
- .4 Separate for reuse and recycling and place in designated containers Steel, Metal, Plastic waste in accordance with Waste Management Plan.
- .5 Place materials defined as hazardous or toxic in designated containers in accordance with Section 01 35 43 - Environmental Procedures.
- .6 Handle and dispose of hazardous materials in accordance with CEPA, TDGA, Regional and Municipal, regulations.
- .7 Ensure emptied containers are sealed and stored safely in accordance with Section 01 35 43 - Environmental Procedures.
- .8 Fold up metal and plastic banding, flatten and place in designated area for recycling.

1.6 ENVIRONMENTAL REQUIREMENTS

.1 Permit wet work to dry before beginning to install.

.2 Maintain uniform minimum temperature of 15 degrees C and humidity of 20-40% before and during installation.

.3 Store materials in work area 48 hours prior to installation.

1.7 EXTRA MATERIALS

.1 Provide extra materials of acoustic units in accordance with Section 01 78 00 - Closeout Submittals.

.2 Provide acoustical units amounting to 5% of gross ceiling area for each pattern and type required for project.

.3 Ensure extra materials are from same production run as installed materials.

.4 Clearly identify each type of acoustic unit, including colour and texture.

.5 Deliver to Departmental Representative, upon completion of the work of this section.

PART 2 - PRODUCTS

2.1 MATERIALS

.1 Acoustic units for suspended ceiling system: to ASTM E 1264.
- .1 Type: suspended tiles, Fiber glass type, with squared edges, clear acoustic factory-coated membrane Durabrite, white acrylic latex paint, for installation on T-suspended class A, with CRB of 0.95, an AC of 190 and a reflection index of 0.90.
- .2 ASTM class: type XII, shape: 2, pattern: E.
- .3 Recycled materials: 71% recycled material.
- .4 Reference products:
  - .1 T-1: Armstrong Optima Open Plan with Humigard Plus, dimensions 565 x 1441 x 25mm.
  - .2 T-2: Armstrong Optima Open Plan with Humigard Plus, dimensions 290 x 1441 x 25mm.

PART 3 - EXECUTION

3.1 EXAMINATION

.1 Do not install acoustical panels and tiles until work above ceiling has been inspected by Departmental Representative.

3.2 INSTALLATION

.1 Install acoustical panels and tiles in ceiling suspension system.

.2 Install fibrous acoustical media and spacers over entire area above suspended metal panels.

.3 In fire rated ceiling systems, secure lay-in panels with hold-down clips and protect over light fixtures, diffusers, air return grilles and other appurtenances according to Certification Organizations design requirements.

3.3 APPLICATION

.1 Install acoustic units to clean, dry and firm substrate.

.2 Scribe acoustic units to fit adjacent work. Butt joints tight, terminate edges with moulding.

3.4 INTERFACE WITH OTHER WORK

.1 Co-ordinate with Section 09 53 00.01 - Acoustical Suspension.

.2 Co-ordinate ceiling work to accommodate components of other sections, such as light fixtures, diffusers, speakers, sprinkler heads, to be built into acoustical ceiling components.

3.5 VERIFICATION

.1 Verification requirements include:
- .1 Materials and resources.
- .2 Storage and collection of recyclables.
- .3 Construction waste management.
- .4 Recycled content.
- .5 Local/regional materials.
- .6 Low-emitting materials.

END OF SECTION

PART 1 - GENERAL

1.1 RELATED REQUIREMENTS

.1 Section 09 51 13 – Acoustical ceiling.

1.2 REFERENCES

.1 ASTM International
- .1 ASTM C 635/C 635M-07, Standard Specifications for the Manufacture, Performance and Testing of Metal Suspension Systems for Acoustical Tile and Lay-In Panel Ceilings.
- .2 ASTM C 636/C 636M-08, Standard Practice for Installation of Metal Ceiling Suspension Systems for Acoustical Tile and Lay-In Panels.

.2 Health Canada/Workplace Hazardous Materials Information System (WHMIS)
- .1 Material Safety Data Sheets (MSDS).

1.3 SUMMARY

.1 The ceiling framing components referred in this section will be purchased by PWGSC, but must be coordinate and installed by the contractor.

.2 The contractor will supply and install all the other products or necessary material for the installation of the suspended ceiling described in this section.

.3 The contractor will review the characteristics of the product or materials and ensure that they are installed in accordance with Part 3 of this section. See plan A12 which is included for reference only and which describes the elements included in the pre-purchase.

.4 The contractor will take possession of the products listed in article 2.2 at the Guy-Favreau Complex.

1.4 ACTION AND INFORMATIONAL SUBMITTALS

.1 Submit in accordance with Section 01 33 00 - Submittal Procedures.

.2 Product Data:
- .1 Submit manufacturer's instructions, printed product literature and data sheets for acoustical suspension and include product characteristics, performance criteria, physical size, finish and limitations.

1.5 CLOSEOUT SUBMITTALS

.1 Submit in accordance with Section 01 78 00 - Closeout Submittals.

.2 Operation and Maintenance Data: submit operation and maintenance data for acoustical suspension for incorporation into manual.

1.6 QUALITY ASSURANCE

.1 Fire-resistance rated suspension system: certified by a Canadian Certification Organization accredited by Standards Council of Canada.

.2 Certifications: submit product certificates signed by manufacturer certifying materials comply with specified performance characteristics and criteria and physical requirements.

1.7 DELIVERY, STORAGE AND HANDLING

.1 Deliver, store and handle materials in accordance with Section 01 61 00 - Common Product Requirements and with manufacturer's written instructions.

.2 Delivery and Acceptance Requirements: deliver materials to site in original factory packaging, labelled with manufacturer's name and address.

.3 Storage and Handling Requirements:
- .1 Store materials off ground, indoors, in dry location and in accordance with manufacturer's recommendations in clean, dry, well-ventilated area.
- .2 Store and protect acoustical ceiling tiles and tracks from nicks, scratches, and blemishes.
- .3 Replace defective or damaged materials with new.

.4 Develop Construction Waste Management related to Work of this Section.

.5 Packaging Waste Management: remove for reuse and return by manufacturer of pallets, crates, padding, and packaging materials as specified in Construction Waste Management Planning accordance with Section 01 74 21 - Construction/Demolition Waste Management and Disposal.

PART 2 - PRODUCTS

2.1 DESIGN CRITERIA

.1 Design Requirements: maximum deflection: 1/360th of span to ASTM C 635/ASTM C635M deflection test.

2.2 MATERIALS

.1 Intermediate duty system to ASTM C 635/ASTM C635M.

.2 Basic materials for suspension system: commercial quality cold rolled steel, aluminum sheet.

.3 Suspension framing elements supplied by PWGSC:
- .1 Apparent grid framing double tee elements (double tees);
- .2 Apparent grid tee elements (secondary tees)
- .3 Accessories: fishplates, brackets.

.4 Hanger wire: galvanized soft annealed steel wire:
- .1 3.6 mm diameter for access tile ceilings.
- .2 2.6 mm diameter for other ceilings.

.5 Hanger inserts: purpose made.

.6 Accessories: splices, clips, wire ties, retainers and wall moulding reveal, to complement suspension system components, as recommended by system manufacturer.

.7 Special accessories for coffered ceiling: angled steel clips, mounted on a rectangular tube, ensuring that the cut portion of secondary tees to the principal double tees (when a grid module is not complete) is secured.

PART 3 - EXECUTION

3.1 EXAMINATION

.1 Verification of Conditions: verify conditions of substrates previously installed under other Sections or Contracts are acceptable for acoustical ceiling tile and track installation in accordance with manufacturer's written instructions.

.1 Visually inspect substrate in presence of Departmental Representative.

.2 Inform Departmental Representative of unacceptable conditions immediately upon discovery.

.3 Proceed with installation only after unacceptable conditions have been remedied [and after receipt of written approval to proceed from Departmental Representative.

3.2 INSTALLATION

.1 Manufacturer's Instructions: comply with manufacturer's written recommendations, including product technical bulletins, product catalogue installation instructions, product carton installation instructions, and data sheets.

.2 Installation: to ASTM C 636/C 636M except where specified otherwise.

.3 Install suspension system to manufacturer's instructions and Certification Organizations tested design requirements.

.4 Do not erect ceiling suspension system until work above ceiling has been inspected and approved by Departmental Representative.

.5 Secure hangers to overhead structure using attachment methods as indicated acceptable to Departmental Representative

.6 Install hangers spaced at maximum 1200 mm centres and within 150 mm from ends of main tees.

.7 Lay out centre line of ceiling both ways, to provide balanced borders at room perimeter with border units not less than 50% of standard unit width, system according to reflected ceiling plan.

.8 Install spacers for double tees.

.9 Ensure suspension system is co-ordinated with location of related components.

.10 Install wall moulding to provide correct ceiling height.

.11 Completed suspension system to support super-imposed loads, such as lighting fixtures, diffusers, grilles and speakers.

.12 Support at light fixtures and diffusers with additional ceiling suspension hangers within 150 mm of each corner and at maximum 600 mm around perimeter of fixture.

.13 Attach transversal profiles to supporting profiles for rigid assembly.

.14 Frame at openings for light fixtures, air diffusers, speakers and at changes in ceiling heights.

.15 Finished ceiling system to be square with adjoining walls and level within 1:1000.

.16 It is prohibited to install panels and acoustic tiles before the Departmental Representative has inspected the facilities that will be concealed by the ceiling.

.7 Install panels and acoustic tiles on suspension frame.

3.3 CLEANING

.1 Progress Cleaning: clean in accordance with Section 01 74 11 - Cleaning.
  .1 Leave Work area clean at end of each day.

.2 Final Cleaning: upon completion remove surplus materials, rubbish, tools and equipment in accordance with Section 01 74 11 - Cleaning.
  .1 Touch up scratches, abrasions, voids and other defects in painted surfaces.

.3 Waste Management: separate waste materials for reuse and recycling in accordance with Section 01 74 21 - Construction/Demolition Waste Management and Disposal.
  .1 Remove recycling containers and bins from site and dispose of materials at appropriate facility.

3.4 PROTECTION

.1 Protect installed products and components from damage during construction.

.2 Repair damage to adjacent materials caused by acoustical suspension installation.

END OF SECTION

PART 1 - GENERAL

1.1 RELATED REQUIREMENTS

.1 Section 02 41 99 – Demolition for minor work.

.2 Section 09 21 99 – Partitions for minor work.

.3 Section 10 22 19 – Post and panel demountable partitions.

1.2 REFERENCES

.1 American Society for Testing and Materials International (ASTM)
- .1 ASTM F 1303-04, Standard Specification for Sheet Vinyl Floor Covering with Backing.

.2 Health Canada/Workplace Hazardous Materials Information System (WHMIS)
- .1 Material Safety Data Sheets (MSDS).

1.3 ACTION AND INFORMATIONAL SUBMITTALS

.1 Provide submittals in accordance with Section 01 33 00 - Submittal Procedures.

.2 Provide product data in accordance with Section 01 33 00 - Submittal Procedures.

.3 Provide samples in accordance with Section 01 33 00 - Submittal Procedures.
- .1 Submit duplicate 300 x 300 mm sample pieces of sheet material, 300 mm long, base 300 mm long..

1.4 DELIVERY, STORAGE AND HANDLING

.1 Deliver, store and handle materials in accordance with Section 01 61 00 - Common Product Requirements.

.2 Waste Management and Disposal:
- .1 Separate waste materials for reuse and recycling in accordance with Section 01 74 21 - Construction/Demolition Waste Management and Disposal.

1.6 AMBIENT CONDITIONS

.1 Maintain air temperature and structural base temperature at flooring installation area above 20 degrees for 48 hours before, during and 48 hours after installation.

1.7 MAINTENANCE

.1 Extra Materials:
- .1 Provide extra materials of resilient sheet flooring and adhesives in accordance with Section 01 78 00 - Closeout Submittals.
- .2 Provide 5% m² of each color, pattern and type flooring material required for project for maintenance use.
- .3 Extra materials one piece and from same production run as installed materials.
- .4 Identify each roll of sheet flooring and each container of adhesive.
- .5 Deliver to Departmental Representative, upon completion of the work of this section.
- .6 Store where directed by Departmental Representative.

PART 2 - PRODUCTS

2.1 MATERIALS

.1 Linoleum sheet: made of nixed matural ingredients and calendered on jute back:
- .1 Pattern: marbeled.
- .2 Thickness: 2.5mm.
- .3 Color:
  - .1 Standard lineoleum:
    - .1 M1: GRAPHYTE, 3408 from Marmoleum Real (dark gray).
    - .2 M2: MIST GRAY, 3032 from Marmoleum Real (light gray).
    - .3 M3: FRESCO BLUE, 3055 from Marmoleum Real (blue).
  - .2 Antistatic lineoleum:
    - .1 RSS-1: GRAPYTE, 73408 from Marmoleum Ohmex (dark gray).
    - .2 RSS-2: MIST GRAY, 73032 from Marmoleum Ohmex (light gray).
    - .3 RSS-3: FRESCO BLUE, 73055 from Marmoleum Ohmex (blu).
- .4 Acceptable product: Marmoleum by Forbo.
  - .1 No other product will be accepted.

.2 Resilient base: continuous, top set, complete with premoulded end stops and external corners:
- .1 Type: rubber.
- .2 Style: cove.
- .3 Thickness: 3.17 mm.
- .4 Height: 111 mm.
- .5 Provide all end pieces and required angular edges.
- .6 Reference product: TIGHTLOCK RESILIENT TCBR by Jonsonite or approved equivalent.
- .7 Color: black.

.3 Primers and adhesives: of types recommended by resilient flooring manufacturer for specific material on applicable substrate, above, on or below grade.
- .1 Rubber floor adhesives:
  - .1 Adhesive: maximum VOC limit 60 g/L to SCAQMD Rule 1168.
- .2 Cove base adhesives:
  - .1 Adhesive: maximum VOC limit 50 g/L to SCAQMD Rule 1168.

.4 Sub-floor filler and leveler: white premix latex requiring water only to produce cementitious paste 2 part latex-type filler requiring no water as recommended by flooring manufacturer for use with their product.

.5 Metal edge strips:
- .1 Aluminum extruded, smooth, polished stainless steel with lip to extend under floor finish, shoulder flush with top of adjacent floor finish.

.6 Sealer and wax: type recommended by resilient flooring material manufacturer for material type and location.

PART 3 - EXECUTION

3.1 MANUFACTURER'S INSTRUCTIONS

.1 Compliance: comply with manufacturer's written recommendations or specifications, including product technical bulletins, handling, storage and installation instructions, and datasheets.

3.2 SITE VERIFICATION OF CONDITIONS

.1 Ensure concrete floors are clean and dry by using test methods recommended by flooring manufacturer.

3.3 PREPARATION

.1 Remove existing resilient flooring.

.2 Remove or treat old adhesives to prevent residual, old flooring adhesives from bleeding through to new flooring and/or interfering with the bonding of new adhesives.

.3 Clean floor and apply filler; trowel and float to leave smooth, flat hard surface. Prohibit traffic until filler cured and dry.

.4 Remove sub-floor ridges and bumps. Fill low spots, cracks, joints, holes and other defects with sub-floor filler.

.5 Prime/Seal concrete slab to resilient flooring manufacturer's printed instructions.

3.4 APPLICATION: FLOORING

.1 Provide high ventilation rate, with maximum outside air, during installation, and for 48 to 72 hours after installation. If possible, vent directly to outside. Do not let contaminated air recirculate through district or whole building air distribution system. Maintain extra ventilation for at least one month following building occupation.

.2 Apply adhesive uniformly using recommended trowel. Do not spread more adhesive than can be covered by flooring before initial set takes place.

.3 Lay flooring with seams parallel to building lines to produce a minimum number of seams. Border widths minimum 1/3 width of full material.

.4 Run sheets in direction of traffic. Double cut sheet joints according to manufacturer's printed instructions.

.5 Heat weld seams of linoleum sheet flooring in accordance with manufacturer's printed instructions.

.6 As installation progresses, and after installation roll flooring with 45 kg minimum roller to ensure full adhesion.

.7 Cut flooring around fixed objects.

.8 Install feature strips and floor markings where indicated. Fit joints tightly.

.9 Install flooring in pan type floor access covers. Maintain floor pattern.

.10 Continue flooring over areas which will be under built-in furniture.

.11 Terminate flooring at centreline of door in openings where adjacent floor finish or colour is dissimilar.

.12 Install metal edge strips at unprotected or exposed edges where flooring terminates.

3.5 APPLICATION: BASE

.1 Lay out base to keep number of joints at minimum.

.2 Clean substrate and prime with one coat of adhesive.

.3 Apply adhesive to back of base.

.4 Set base against wall and floor surfaces tightly by using 3 kg hand roller.

.5 Install straight and level to variation of 1:1000.

.6 Scribe and fit to door frames and other obstructions. Use premoulded end pieces at flush door frames.

.7 Cope internal corners. Use premoulded corner units for right angle external corners. Use formed straight base material for external corners of other angles.

.8 Use toeless type base where floor finish will be carpet, coved type elsewhere.

3.6 FIELD QUALITY CONTROL

.1 Manufacturer's Field Services:

.1 Provide manufacturer's field services consisting of product use recommendations and periodic site visits for inspection of product installation in accordance with manufacturer's instructions.

3.7 CLEANING

.1 Proceed in accordance with Section 01 74 11 - Cleaning.

.2 Remove excess adhesive from floor, base and wall surfaces without damage.

.3 Clean, seal and wax floor and base surface to flooring manufacturer's printed instructions.

3.8 PROTECTION

.1 Protect new floors from time of final set of adhesive until final waxing.

.2 Prohibit traffic on floor for 48 hours after installation.

.3 Use only water-based coating for linoleum.

END OF SECTION

PART 1 - GENERAL

1.1 RELATED REQUIREMENTS

.1 Section 02 41 99 – Demolition for minor work.

.2 Section 09 21 99 – Partitions for minor work.

.3 Section 09 65 16 – Resilient tile flooring

.4 Section 10 22 19 – Post and panel demountable partition.

1.2 REFERENCES

.1 American Association of Textile Chemists and Colorists (AATCC)
- .1 AATCC Test Method 16-2004, Colorfastness to Light.
- .2 AATCC Test Method 23-2005, Colorfastness to Burn Gas Fumes.
- .3 AATCC Test Method 129-2005, Colourfastness to Ozone in the Atmosphere Under High Humidities.
- .4 AATCC Test Method 134-2006, Electrostatic Propensity of Carpets.
- .5 AATCC Test Method 171-2005, Carpets: Cleaning of; Hot Water Extraction Method.
- .6 AATCC Test Method 175-2008, Stain Resistance: Pile Floor Coverings.
- .7 AATCC Test Method 189-2007, Fluorine Content of Carpet Fibers.

.2 ASTM International
- .1 ASTM D 297-93(2006), Standard Test Methods for Rubber Products-Chemical Analysis.
- .2 ASTM D 1335-05, Standard Test Method for Tuft Bind of Pile Yarn Floor Coverings.
- .3 ASTM D 2661-08, Standard Specification for Acrylonitrile-Butadiene-Styrene (ABS) Schedule 40 Plastic Drain, Waste, and Vent Pipe and Fittings.
- .4 ASTM D 1667-05, Standard Specification for Flexible Cellular Materials-Vinyl Chloride Polymers and Copolymers (Closed-Cell Foam).
- .5 ASTM D 3574-08, Standard Test Methods for Flexible Cellular Materials - Slab, Bonded, and Molded Urethane Foams.
- .6 ASTM D 3936-05, Standard Test Method for Resistance to Delamination of the Secondary Backing of Pile Yarn Floor Covering.

.3 Canadian General Standards Board (CGSB)
- .1 CAN/CGSB-4.2 No. 22-2004, Textile Test Methods - Colourfastness to Rubbing (Crocking).
- .2 CAN/CGSB-4.2 No.27.6M-2004, Textile Test Methods - Flame Resistance - Methemine Tablet Test for Textile Floor Coverings.
- .3 CAN/CGSB-4.2 No. 76-94/ISO 2551: 1981 , Textile Test Methods - Machine-Made Textile Floor Coverings - Determination of Dimensional Changes Due to the Effects of Varied Water and Heat Conditions.
- .4 CAN/CGSB-4.2 No.77.1-94/ISO 4919: 2000 , Textile Test Methods - Carpets - Determination of Tuft Withdrawal Force.
- .5 CAN/CGSB-4.129-93(R1997), Carpets for Commercial Use.

.4 Carpet and Rug Institute (CRI)
- .1 CRI Carpet Installation Standard 2009.
- .2 CRI Green Label Indoor Air Quality Testing Program.
- .3 CRI Green Label Plus Indoor Air Quality Testing Program.

.5 National Floor Covering Association (NFCA)
.1 National Floor Covering Specification Manual 2007.

.6 Underwriters' Laboratories of Canada (ULC)
.1 CAN/ULC-S102-07, Standard Method of Test for Surface Burning Characteristics of Building Materials and Assemblies.
.2 CAN/ULC-S102.2-07, Standard Method of Test for Surface Burning Characteristics of Flooring, Floor Coverings and Miscellaneous Materials and Assemblies.

1.3 ACTION AND INFORMATIONAL SUBMITTALS

.1 Submit in accordance with Section 01 33 00 - Submittal Procedures.

.2 Product Data:
.1 Submit manufacturer's instructions, printed product literature and data sheets for each carpet tile, undercushion, adhesive, subfloor patching compound and include product characteristics, performance criteria, physical size, finish and limitations.

.3 Samples:
.1 Submit for review and acceptance of each unit.
.2 Samples will be returned for inclusion into work.
.3 Submit duplicate samples of each type of carpet tile specified and duplicate tiles for each colour selected, 150 mm length base.

.4 Certificates: submit product certificates signed by manufacturer certifying materials comply with specified performance characteristics and criteria and physical requirements.

.5 Test and Evaluation Reports:
.1 Certified test reports showing compliance with specified performance characteristics and physical properties.

.6 Manufacturer's Instructions: submit manufacturer's installation and storage instructions.

.7 Manufacturers Reports:
.1 Manufacturer's Field Reports: submit manufacturer's written reports within 3 days of review, verifying compliance with specifications.

1.4 CLOSEOUT SUBMITTALS

.1 Submit in accordance with Section 01 78 00 - Closeout Submittals.

1.5 MAINTENANCE MATERIAL SUBMITTALS

.1 Extra stock materials: deliver to Owner extra materials from same production run as products installed. Package products with protective covering and identify with descriptive labels. Comply with Section 01 78 00 - Closeout Submittals.

1.6 QUALITY ASSURANCE

.1 Qualifications:
.1 Manufacturer: capable of providing field service representation during construction and approving application method.
.2 Flooring Installer:
.1 Experienced in performing work of this Section who has specialized in installation of work similar to that required for this project.

.2 Certified by carpet manufacturer prior to bid submission.
.3 Must not sub-contract labor without written approval of Departmental Representative.
.4 Responsible for proper product installation, including floor testing and preparation as specified and in accordance with carpet manufacturer's written instructions.

1.7 DELIVERY, STORAGE AND HANDLING

.1 Deliver, store and handle materials in accordance with Section 01 61 00 - Common Product Requirements and with manufacturer's written instructions.

.2 Delivery and Acceptance Requirements: deliver materials to site in original factory packaging, labelled with manufacturer's name and address.

.3 Storage and Handling Requirements:
.1 Store materials off ground, indoors, in dry location and in accordance with manufacturer's recommendations in clean, dry, well-ventilated area.
.2 Store materials protected from exposure to harmful weather conditions and at temperature conditions recommended by manufacturer.
.3 Store and protect carpet tile and adhesive in original containers or wrapping with manufacturer's seals and labels intact.
.4 Store and protect carpet tile and accessories in location as directed by Departmental Representative.
.5 Store carpet and adhesive at minimum temperature of 18 degrees C and relative humidity of maximum 65% for minimum of 48 hours before installation.
.6 Prevent damage to materials during handling and storage. Keep materials under cover and free from dampness.
.7 Safety: comply with requirements of Workplace Hazardous Materials Information System (WHMIS) regarding use, handling, storage, and disposal of hazardous materials.
.8 Replace defective or damaged materials with new.

1.8 SITE CONDITIONS

.1 Ambient Conditions:
.1 Moisture: ensure substrate is within moisture limits and alkalinity limits recommended by manufacturer. Prepare moisture testing and provide report to Departmental Representative.
.2 Temperature: maintain ambient temperature of not less than 18 degrees C from 48 hours before installation to at least 48 hours after completion of work.
.3 Relative humidity: maintain between 10% and 65% for 48 hours before, during and 48 hours after installation.
.4 Ventilation:
.1 Departmental Representative will co-ordinate operation of ventilation system during installation of carpet. Ventilate area of work as directed by Departmental Representative by use of approved portable supply and exhaust fans.
.2 Ventilate enclosed spaces in accordance with Section 01 51 00 - Temporary Utilities. Provide fans with HEPA filters.
.3 Provide continuous ventilation during and after carpet application. Run ventilation system 24 hours per day during installation; provide continuous ventilation for 7 days after completion of carpet installation.
.5 Install carpet after space is enclosed and weatherproof, wet-work in space is completed and nominally dry, work above ceilings is complete.

1.10 WARRANTY

.1 Manufacturer's warranty: submit, for Departmental Representative's acceptance, written, signed and issued manufacturer's warranty, in the name of Canada, stating that carpets are warranted against wear, deterioration, delamination, seam breakage, stretching or creasing, static, discoloration or other defects which may adversely affect their appearance or durability for a 10 year period.

.2 Submit for approval by the Departmental Representative a standard warranty document. Executed by an authorized representative of the company. The manufacturer’s warranty is in addition to the warranty provided for in the contract and does not in any way restrict the right under the terms of the contract.

PART 2 - PRODUCTS

2.1 MATERIALS

.1 Commercial grade carpet for general office space purpose:
- .1 Fiber type: 100% nylon.
- .2 Dyeing method: in solution.
- .3 Dimensions: 250mm x 1000mm.
- .4 Recycled content: 62%

.2 Acceptable products:
- .1 T1: Carpet color GRAPHITE (104501), Silver Linings (SL910) collection from INTERFACE.
- .2 T2: Carpet color GRAPHITE LINE (104513), Silver Linings (SL920) collection from INTERFACE.

.3 Adhesives: VOC limit 50 g/L maximum to SCAQMD Rule 1168 and GS-36.

2.2 PERFORMANCE

.1 Flammability: certified for flammability to Health Canada regulations under "Hazardous Products - Carpet Regulations", Part II of Schedule 1.

.2 Flame Spread: maximum flame spread rating 300, maximum smoke developed classification 500, when tested to CAN/ULC-S102.2.

.3 Smoke Development: 450 or less per ASTM E 662.

.4 Dry Breaking Strength: to ASTM D 2661, minimum acceptable tear strength in both length and width:
- .1 11.3 kg for carpets installed by glue down installation.

.5 Wear: none for 10 years.

.6 Edge Ravel: none for 10 years.

.7 Static Generation: less than 3.0 kV per AATCC 134 for 10 years.

.8 Tuft Bind: Tuft Lock: to ASTM D 1335 and CAN/CGSB-4.129, minimum acceptable 1.6 kilograms for cut pile product.

.9 De-lamination of Secondary Backing: Lamination Strength of Secondary Backing: to ASTM D 3936, minimum acceptable peel strength of 1.6 kg/25 mm.

.10 Stain resistance: to AATCC 175, 8.

.11 Soil Resistance: 350 ppm fluorine minimum, Fluorine Durability Level to AATCC 189.

.12 Colourfastness to light: to CAN/CGSB-4.2 No.18.3 and AATCC 16.

.13 Colourfastness to atmosphere: to AATCC 129 and AATCC 23.

.14 Colourfastness to crocking: to CAN/CGSB-4.2 No. 22.

.15 Indoor Air Quality Certification: certified to CRI Green Label Plus IAQ requirements.

2.3 ACCESSORIES

.1 Sill
- .1 Aluminum sill, recommended by carpet tile manufaturer

.2 Adhesive:
- .1 Multi-purpose Adhesive Type: recommended by carpet tile manufacturer for direct glue down installation].
- .2 Acceptable product: Mapei Ultrabond Eco 800 or approved equivalent.

.3 Latex for carpet edge finish.

.4 Printing material for concrete substrate: according to CAN / CGSB-25.20, type 1.

.5 Filling and leveling materials for substrates: quick-setting cementitious compound, modified with polymers.
- .1 Acceptable product: Mapei PlaniPatch or equivalent proven.

.6 Self-leveling filler material: self-leveling cementitious compound with fast curing designed for leveling up to 25mm thickness.
- .1 Acceptable product: Mapei Ultra Plan MB or equivalent approved.

PART 3 - EXECUTION

3.1 INSTALLERS

.1 Use experienced and qualified technicians to carry out assembly and installation of tile carpet.

3.2 EXAMINATION

.1 Examine conditions, substrates and work to receive work of this Section, co-ordinate with Section 01 71 00 - Examination and Preparation.

.2 Verification of Conditions: verify conditions of substrates previously installed under other Sections or Contracts are acceptable for carpet tile installation in accordance with manufacturer's written instructions.
- .1 Inform Departmental Representative of unacceptable conditions immediately upon discovery.
- .2 Proceed with installation only after unacceptable conditions have been remedied [and after receipt of written approval to proceed from Departmental Representative.

3.3 PREPARATION

.1 Subfloor Preparation:
- .1 Inspect concrete and determine special care required to make it a suitable for carpet.
- .2 Fill and level cracks 3 mm wide or protrusions over 0.8 mm with appropriate and compatible latex patching compound.
- .3 Comply with manufacturer's written recommendations for maximum patch thickness.
- .4 Prime large patch areas with compatible primer.
- .5 Ensure concrete substrates are cured, clean and dry.
- .6 Ensure concrete substrates are free of paint, dirt, grease, oil, curing or parting agents, and other contaminates, including sealers, that interfere with the bonding of adhesive.
- .7 Where powdery or porous concrete surface is encountered, apply primer compatible with adhesive to provide a suitable surface for glue-down installation.

.2 Surface Preparation: prepare surface in accordance with manufacturer's written recommendations and co-ordinate with Section 01 71 00 - Examination and Preparation.
- .1 Prepare floor surfaces in accordance with CRI Carpet Installation Standard.

.3 Tile Carpeting Preparation:
- .1 Pre-condition carpeting: following manufacturer's written instructions.

.4 Demolition / Removal:
- .1 Remove and return carpet for recycling or reclamation in accordance with Section 01 74 21 - Construction/Demolition Waste Management and Disposal and with Waste Reduction Workplan. Co-ordinate with Departmental Representative.

3.4 INSTALLATION

.1 Install carpet tiles in accordance with manufacturer's written instructions, and CRI Carpet Installation Standard and co-ordinate with Section 01 73 00 - Execution.

.2 Co-ordinate tile carpeting work with work of other trades, for proper time and sequence to avoid construction delays.

.3 Install carpet tile after finishing work is completed but before demountable office partitions and telephone and electrical pedestal outlets are installed.

.4 Install carpet tile as per manufacturer's recommendation. This can include quarter-turn 90 degree format, monolithic, random, quarter turn ashlar, horizontal, herringbone or vertical ashlar.

.5 Snugly join carpet tiles in completed installation.
- .1 Measure distance covered by 11 carpet tiles (10 joints) and ensure distance is in compliance with manufacturer specifications.
- .2 Do not trap yarn between carpet tiles.

.6 Apply thin film of pressure-sensitive adhesive according to manufacturer's recommendations.

.7 Ensure finished installation presents smooth wearing surface free from conspicuous seams, burring and other faults.

.8 Use material from same dye lot.
- .1 Ensure color, pattern and texture match within visual areas.
- .2 Maintain constant pile direction.

.9 Fit around architectural, mechanical, electrical and telephone outlets, and furniture fitments, around perimeter of rooms into recesses, and around projections.

.10 Install carpet tiles to underfloor duct system and to access covers.

.11 Install carpeting in pan type floor access covers.

.12 Extend carpet tiles into toe spaces, door reveals, closets, open-bottomed obstructions, removable flanges, alcoves, and similar openings.

.13 Install carpet tiles smooth and free from bubbles, puckers, and other defects.

.14 Protect exposed carpet tile edges at transition to other flooring materials with suitable transition strips.

3.5 SITE QUALITY CONTROL

.1 Site Tests and Inspections:
- .1 Co-ordinate site test with Section 01 45 00 - Quality Control.

3.6 CLEANING

.1 Progress Cleaning: clean in accordance with Section 01 74 11 - Cleaning.
- .1 Leave Work area clean at end of each day.
- .2 Final Cleaning: upon completion remove surplus materials, rubbish, tools and equipment in accordance with Section 01 74 11 - Cleaning.
  - .1 Vacuum carpets clean immediately after completion of installation.

.2 Waste Management: separate waste materials for reuse and recycling in accordance with Section 01 74 21 - Construction/Demolition Waste Management and Disposal
- .1 Remove recycling containers and bins from site and dispose of materials at appropriate facility.

3.7 PROTECTION

.1 Protect installed products and components from damage during construction.

.2 Prohibit traffic on carpet for period of 24 hours minimum after installation and until adhesive is cured.

.3 Install carpet protection to satisfaction of Departmental Representative.

.4 Repair damage to adjacent materials caused by tile carpeting installation.

END OF SECTION

PART 1 - GENERAL

1.1 SUMMARY

.1 Section Includes:
- .1 Material and installation of site applied paint finishes to new interior surfaces, including site painting of shop primed surfaces.

.2 Related Requirements
- .1 Section 02 41 99 – Demolition for minor works.
- .2 Section 06 40 00 – Architectural woodwork.
- .3 Section 07 84 00 – Fire stopping.
- .4 Section 07 92 00 – Joint sealant.
- .5 Section 08 11 00 – Metal doors and frames.
- .6 Section 08 14 16 – Flush wooden door.
- .7 Section 08 71 00 – Door hardware.
- .8 Section 10 22 16 – Post and panel demountable partition.

1.2 REFERENCES

.1 Department of Justice Canada (Jus)
- .1 Canadian Environmental Protection Act (CEPA), 1999, c. 33

.2 Environmental Protection Agency (EPA)
- .1 EPA Test Method for Measuring Total Volatile Organic Compound Content of Consumer Products, Method 24 - 1995, (for Surface Coatings).

.3 Health Canada / Workplace Hazardous Materials Information System (WHMIS)
- .1 Material Safety Data Sheets (MSDS).

.4 Master Painters Institute (MPI)
- .1 MPI Architectural Painting Specifications Manual, 2004.

.5 National Fire Code of Canada - 1995

.6 Society for Protective Coatings (SSPC)
- .1 SSPC Painting Manual, Volume Two, 8th Edition, Systems and Specifications Manual.

.7 Transport Canada (TC)
- .1 Transportation of Dangerous Goods Act (TDGA), 1992, c. 34 .

1.3 QUALITY ASSURANCE

.1 Qualifications:
- .1 Contractor: minimum of five years proven satisfactory experience. Provide list of last [three] comparable jobs including, job name and location, specifying authority, and project manager.
- .2 Journeymen: qualified journeymen who have "Tradesman Qualification Certificate of Proficiency" engaged in painting work.
- .3 Apprentices: working under direct supervision of qualified trades person in accordance with trade regulations.

1.4 SCHEDULING

.1 Submit work schedule for various stages of painting to Departmental Representative for review. Submit schedule minimum of 48 hours in advance of proposed operations.

.2 Obtain written authorization from Departmental Representative for changes in work schedule.

.3 Schedule painting operations to prevent disruption of occupants.

1.5 ACTION AND INFORMATIONAL SUBMITTALS

.1 Submittals in accordance with Section 01 33 00 - Submittal Procedures.

.2 Product Data:
- .1 Submit product data and instructions for each paint and coating product to be used.
- .2 Submit product data for the use and application of paint thinner.
- .3 Submit two copies of Workplace Hazardous Materials Information System (WHMIS) Material Safety Data Sheets (MSDS) in accordance with Section 01 33 00 - Submittal Procedures. Indicate VOCs during application and curing.

.3 Samples:
- .1 Submit full range colour sample chips to indicate where colour availability is restricted.
- .2 Retain reviewed samples on-site to demonstrate acceptable standard of quality for appropriate on-site surface.
- .3 Test reports: submit certified test reports for paint from approved independent testing laboratories, indicating compliance with specifications for specified performance characteristics and physical properties.
  - .1 Lead, cadmium and chromium: presence of and amounts.
  - .2 Mercury: presence of and amounts.
  - .3 Organochlorines and PCBs: presence of and amounts.
- .4 Certificates: submit certificates signed by manufacturer certifying that materials comply with specified performance characteristics and physical properties.
- .5 Manufacturer's Instructions:
  - .1 Submit manufacturer's installation and application instructions.
- .6 Closeout Submittals: submit maintenance data for incorporation into manual specified in Section 01 78 00 - Closeout Submittals include following:
  - .1 Product name, type and use.
  - .2 Manufacturer's product number.
  - .3 Colour numbers.
  - .4 MPI Environmentally Friendly classification system rating.

1.6 MAINTENANCE

.1 Extra Materials:
- .1 Deliver to extra materials from same production run as products installed. Package products with protective covering and identify with descriptive labels. Comply with Section 01 78 00 - Closeout Submittals.
- .2 Quantity: provide one - four litre can of each type and color of primer, stain, finish coating. Identify color and paint type in relation to established color schedule and finish system.
- .3 Delivery, storage and protection: comply with Departmental Representative requirements for delivery and storage of extra materials.

1.7 DELIVERY, STORAGE AND HANDLING

.1 Packing, Shipping, Handling and Unloading:
- .1 Pack, ship, handle and unload materials in accordance with Section 01 61 00 - Common Product Requirements and manufacturer's written instructions.

.2 Acceptance at Site:
- .1 Identify products and materials with labels indicating:
  - .1 Manufacturer's name and address.
  - .2 Type of paint or coating.
  - .3 Compliance with applicable standard.
  - .4 Color number in accordance with established color schedule.

.3 Remove damaged, opened and rejected materials from site.

.4 Storage and Protection:
- .1 Provide and maintain dry, temperature controlled, secure storage.
- .2 Store materials and supplies away from heat generating devices.
- .3 Store materials and equipment in well ventilated area with temperature range 7 degrees C to 30 degrees C.

.5 Store temperature sensitive products above minimum temperature as recommended by manufacturer.

.6 Keep areas used for storage, cleaning and preparation clean and orderly. After completion of operations, return areas to clean condition.

.7 Remove paint materials from storage only in quantities required for same day use.

.8 Fire Safety Requirements:
- .1 Provide one 9 kg dry chemical fire extinguisher adjacent to storage area.
- .2 Store oily rags, waste products, empty containers and materials subject to spontaneous combustion in ULC approved, sealed containers and remove from site on a daily basis.
- .3 Handle, store, use and dispose of flammable and combustible materials in accordance with National Fire Code of Canada requirements.

.9 Waste Management and Disposal:
- .1 Separate waste materials for reuse and recycling in accordance with Section 01 74 21 - Construction/Demolition Waste Management and Disposal.
- .2 Remove from site and dispose of packaging materials at appropriate recycling facilities.
- .3 Collect and separate for disposal paper, plastic, polystyrene, corrugated cardboard packaging material in appropriate on-site bins for recycling in accordance with Waste Management Plan (WMP).
- .4 Place materials defined as hazardous or toxic in designated containers.
- .5 Ensure emptied containers are sealed and stored safely.
- .6 Unused paint materials must be disposed of at official hazardous material collections site as approved by Departmental Representative.
- .7 Paint, stain and wood preservative finishes and related materials (thinners, and solvents) are regarded as hazardous products and are subject to regulations for disposal. Information on these controls can be obtained from Provincial Ministries of Environment and Regional levels of Government.
- .8 Material which cannot be reused must be treated as hazardous waste and disposed of in an appropriate manner.

.9 Place materials defined as hazardous or toxic waste, including used sealant and adhesive tubes and containers, in containers or areas designated for hazardous waste.

.10 To reduce the amount of contaminants entering waterways, sanitary/storm drain systems or into ground follow these procedures:

.1 Retain cleaning water for water-based materials to allow sediments to be filtered out.

.2 Retain cleaners, thinners, solvents and excess paint and place in designated containers and ensure proper disposal.

.3 Return solvent and oil soaked rags used during painting operations for contaminant recovery, proper disposal, or appropriate cleaning and laundering.

.4 Dispose of contaminants in approved legal manner in accordance with hazardous waste regulations.

.5 Empty paint cans are to be dry prior to disposal or recycling (where available).

.11 Where paint recycling is available, collect waste paint by type and provide for delivery to recycling or collection facility.

1.8 SITE CONDITIONS

.1 Heating, Ventilation and Lighting:

.1 Ventilate enclosed spaces.

.2 Provide continuous ventilation for seven days after completion of application of paint.

.3 Coordinate use of existing ventilation system with Departmental Representative and ensure its operation during and after application of paint as required.

.4 Provide temporary ventilating and heating equipment where permanent facilities are not available or supplemental ventilating and heating equipment if ventilation and heating from existing system is inadequate to meet minimum requirements.

.5 Provide minimum lighting level of 323 Lux on surfaces to be painted.

.2 Temperature, Humidity and Substrate Moisture Content Levels:

.1 Unless pre-approved written approval by Specifying body and product manufacturer, perform no painting when:

.1 Ambient air and substrate temperatures are below 10 degrees C.

.2 Substrate temperature is above 32 degrees C unless paint is specifically formulated for application at high temperatures.

.3 Substrate and ambient air temperatures are not expected to fall within MPI or paint manufacturer's prescribed limits.

.4 The relative humidity is under 85% or when the dew point is more than 3 degrees C variance between the air/surface temperature. Paint should not be applied if the dew point is less than 3 degrees C below the ambient or surface temperature. Use sling psychrometer to establish the relative humidity before beginning paint work.

.5 Rain or snow are forecast to occur before paint has thoroughly cured or when it is foggy, misty, raining or snowing at site.

.6 Ensure that conditions are within specified limits during drying or curing process, until newly applied coating can itself withstand 'normal' adverse environmental factors.

.2 Perform painting work when maximum moisture content of the substrate is below:

.1 Allow new concrete and masonry to cure minimum of 28 days.

.2 15% for wood.

.3 12% for plaster and gypsum board.

.3 Test for moisture using calibrated electronic Moisture Meter. Test concrete floors for moisture using "cover patch test".

.4 Test concrete, masonry and plaster surfaces for alkalinity as required.

.3 Surface and Environmental Conditions:
- .1 Apply paint finish in areas where dust is no longer being generated by related construction operations or when wind or ventilation conditions are such that airborne particles will not affect quality of finished surface.
- .2 Apply paint to adequately prepared surfaces and to surfaces within moisture limits.
- .3 Apply paint when previous coat of paint is dry or adequately cured.

.4 Additional interior application requirements:
- .1 Apply paint finishes when temperature at location of installation can be satisfactorily maintained within manufacturer's recommendations.
- .2 Apply paint in occupied facilities during silent hours only. Schedule operations to approval of Departmental Representative such that painted surfaces will have dried and cured sufficiently before occupants are affected.

PART 2 - PRODUCTS

2.1 MATERIALS

.1 Materials and resources in accordance with Section 01 47 15 - Sustainable Requirements: Construction.

.2 Paint materials listed in the MPI Approved Products List (APL) are acceptable for use on this project.

.3 Provide paint materials for paint systems from single manufacturer.

2.2 COLOURS

.1 Coloration (refer to finishes plan for positioning):
- .1 P1: General colour and dropped perimeter gypsum ceiling, SICO #6199-11 (Guarda)
- .2 P2: Intermediary colour, SICO #6206-24 (Esquisse (pale gray))
- .3 P3: Intermediary colour, SICO #6206-31 (Epure (medium gray))
- .4 P4: Accent colour, SICO #6113-54 (Yellow)
- .5 P5: Accent colour, SICO #6006-63 (Electrcity (blue))
- .6 P6: Accent colour and paint for existing doors and frames, BENJAMIN MOORE #CC-544 (Caban grey)
- .7 Concrete floor paint : standard gray epoxy, as per manufacturer’s standard colours.

2.3 MIXING AND TINTING

.1 Perform colour tinting operations prior to delivery of paint to site. Obtain written approval from Departmental Representative for tinting of painting materials.

.2 Mix paste, powder or catalyzed paint mixes inaccordance with manufacturer's written instructions.

.3 Use and add thinner in accordance with paint manufacturer's recommendations. Do not use kerosene or similar organic solvents to thin water-based paints.

.4 Thin paint for spraying in accordance with paint manufacturer's instructions.

.5 Re-mix paint in containers prior to and during application to ensure break-up of lumps, complete dispersion of settled pigment, and colour and gloss uniformity.

2.4 GLOSS/SHEEN RATINGS

.1 Paint gloss is defined as sheen rating of applied paint, in accordance with following values:

	Gloss @ 60 degrees	**Sheen @ 85 degrees**
Gloss level 1 – Matte finish (flat)	Max. 5	Max 10
Gloss level 2 – Velvet like finish	Max. 10	10 to 35
Gloss level 3 – Eggshell	10 to 25	10 to 35
Gloss level 4 – Satin like finish	20 to 35	Min. 35
Gloss level 5 – Traditional Semi-Gloss	35 to 70	
Gloss level 6 – Traditional gloss	70 to 85	
Gloss level 7 – High gloss finish	More than 85	

.2 Gloss level ratings of painted surfaces as indicated and as noted on Finish Schedule.

2.5 INTERIOR PAINTING SYSTEMS

.1 Concrete horizontal surfaces: floors and stairs:
.1 INT 3.2C - Epoxy finish.

.2 Plaster and gypsum board: gypsum wallboard, drywall, "sheet rock type material", and textured finishes:
.1 INT 9.2A - Latex [insert gloss level] finish (over latex sealer).

.3 Galvanized metal: doors, frames, railings, misc. steel, pipes, overhead decking, and ducts.
.1 INT 5.3A - Latex velvet like finish (5 to 10% gloss).

.4 Ceiling paint: refer to section 09 51 13 – Acoustical panel for ceilings and section 09 53 00.01 – Acoustical suspension.

2.6 SOURCE QUALITY CONTROL

.1 Perform following tests on each batch of consolidated post-consumer material before surface coating is reformulated and canned. Testing by laboratory or facility which has been accredited by Standards Council of Canada.
.1 Lead, cadmium and chromium are to be determined using ICP-AES (Inductively Coupled Plasma - Atomic Emission Spectroscopy) technique no. 6010 as defined in EPA SW-846.
.2 Mercury is to be determined by Cold Vapour Atomic Absorption Spectroscopy using Technique no. 7471 as defined in EPA SW-846.
.3 Organochlorines and PCBs are to be determined by Gas Chromatography using Technique no. 8081 as defined in EPA SW-846.

PART 3 - EXECUTION

3.1 MANUFACTURER'S INSTRUCTIONS

.1 Compliance: comply with manufacturer's written recommendations or specifications, including product technical bulletins, handling, storage and installation instructions, and data sheet.

3.2 GENERAL

.1 Perform preparation and operations for interior painting in accordance with MPI Architectural Painting Specifications Manual except where specified otherwise.

.2 Apply paint materials in accordance with paint manufacturer's written application instructions.

3.3 EXAMINATION

.1 Investigate existing substrates for problems related to proper and complete preparation of surfaces to be painted. Report to Departmental Representative damages, defects, unsatisfactory or unfavourable conditions before proceeding with work.

.2 Conduct moisture testing of surfaces to be painted using properly calibrated electronic moisture meter, except test concrete floors for moisture using simple "cover patch test". Do not proceed with work until conditions fall within acceptable range as recommended by manufacturer.

.3 Maximum moisture content as follows:
- .1 Stucco, plaster and gypsum board: 12%.
- .2 Concrete: 12%.

3.4 PREPARATION

.1 Protection:
- .1 Protect existing building surfaces and adjacent structures from paint spatters, markings and other damage by suitable non-staining covers or masking. If damaged, clean and restore surfaces as directed by Departmental Representative.
- .2 Protect items that are permanently attached such as Fire Labels on doors and frames.
- .3 Protect factory finished products and equipment.
- .4 Protect passing pedestrians, building occupants and general public in and about the building.

.2 Surface Preparation:
- .1 Remove electrical cover plates, light fixtures, surface hardware on doors, bath accessories and other surface mounted equipment, fittings and fastenings prior to undertaking painting operations. Identify and store items in secure location and re-installed after painting is completed.
- .2 Move and cover furniture and portable equipment as necessary to carry out painting operations. Replace as painting operations progress.
- .3 Place "WET PAINT" signs in occupied areas as painting operations progress. Signs to approval of Departmental Representative.

.3 Clean and prepare surfaces in accordance with MPI Architectural Painting Specification Manual requirements. Refer to MPI Manual in regard to specific requirements and as follows:
- .1 Remove dust, dirt, and other surface debris by vacuuming, wiping with dry, clean cloths or compressed air.

.4 Prevent contamination of cleaned surfaces by salts, acids, alkalis, other corrosive chemicals, grease, oil and solvents before prime coat is applied and between applications of remaining coats. Apply primer, paint, or pretreatment as soon as possible after cleaning and before deterioration occurs.

.5 Sand and dust between coats as required to provide adequate adhesion for next coat and to remove defects visible from a distance up to 1000 mm.

3.5 APPLICATION

.1 Method of application to be as approved by Departmental Representative. Apply paint by brush roller, air sprayer or airless sprayer. Conform to manufacturer's application instructions unless specified otherwise.

.2 Brush and Roller Application:
- .1 Apply paint in uniform layer using brush and/or roller type suitable for application.
- .2 Work paint into cracks, crevices and corners.
- .3 Paint surfaces and corners not accessible to brush using spray, daubers and/or sheepskins. Paint surfaces and corners not accessible to roller using brush, daubers or sheepskins.
- .4 Brush and/or roll out runs and sags, and over-lap marks. Rolled surfaces free of roller tracking and heavy stipple.
- .5 Remove runs, sags and brush marks from finished work and repaint.

.3 Spray application:
- .1 Provide and maintain equipment that is suitable for intended purpose, capable of atomizing paint to be applied, and equipped with suitable pressure regulators and gauges.
- .2 Keep paint ingredients properly mixed in containers during paint application either by continuous mechanical agitation or by intermittent agitation as frequently as necessary.
- .3 Apply paint in uniform layer, with overlapping at edges of spray pattern. Back roll first coat application.
- .4 Brush out immediately all runs and sags.
- .5 Use brushes and rollers to work paint into cracks, crevices and places which are not adequately painted by spray.

.4 Use dipping, sheepskins or daubers only when no other method is practical in places of difficult access.

.5 Apply coats of paint continuous film of uniform thickness. Repaint thin spots or bare areas before next coat of paint is applied.

.6 Allow surfaces to dry and properly cure after cleaning and between subsequent coats for minimum time period as recommended by manufacturer.

.7 Sand and dust between coats to remove visible defects.

.8 Finish surfaces both above and below sight lines as specified for surrounding surfaces, including such surfaces as tops of interior cupboards and cabinets and projecting ledges.

.9 Finish inside of cupboards and cabinets as specified for outside surfaces.

.10 Finish closets and alcoves as specified for adjoining rooms.

.11 Finish top, bottom, edges and cutouts of doors after fitting as specified for door surfaces.

3.6 MECHANICAL/ ELECTRICAL EQUIPMENT

.1 Paint finished area exposed conduits, piping, hangers, ductwork and other mechanical and electrical equipment with colour and finish to match adjacent surfaces, except as indicated.

.2 Boiler room, mechanical and electrical rooms: paint exposed conduits, piping, hangers, ductwork and other mechanical and electrical equipment.

.3 Other unfinished areas: leave exposed conduits, piping, hangers, ductwork and other mechanical and electrical equipment in original finish and touch up scratches and marks.

.4 Touch up scratches and marks on factory painted finishes and equipment with paint as supplied by manufacturer of equipment.

.5 Do not paint over nameplates.

.6 Keep sprinkler heads free of paint.

.7 Paint inside of ductwork where visible behind grilles, registers and diffusers with primer and one coat of matt black paint.

3.7 SITE TOLERANCES

.1 Walls: no defects visible from a distance of 1000 mm at 90 degrees to surface.

.2 Ceilings: no defects visible from floor at 45 degrees to surface when viewed using final lighting source.

.3 Final coat to exhibit uniformity of colour and uniformity of sheen across full surface area.

END OF SECTION

PART 1 - GENERAL

1.1 RELATED REQUIREMENTS

.1 Section 08 11 00 – Metal doors and frames.

.2 Section 08 71 00 – Door hardware.

.3 Section 08 80 50 – Glazing.

.4 Section 09 21 99 – Partitions for minor works.

.5 Section 09 91 23 – Interior painting.

1.2 REFERENCES

.1 Aluminum Association Designation System for Aluminum Finishes -2008.

.2 ASTM International
- .1 ASTM A 653/A 653M-09, Standard Specification for Steel Sheet, Zinc-Coated (Galvanized) or Zinc-Iron Alloy-Coated (Galvannealed) by the Hot-Dip Process.
- .2 ASTM C 1396/C 1396M-06a, Standard Specification for Gypsum Board.
- .3 ASTM E 90-09, Standard Test Method for Laboratory Measurement of Airborne - Sound Transmission Loss of Building Partitions, and Elements.

.3 Canadian General Standards Board (CGSB)
- .1 CAN/CGSB-1.81-M90, Air Drying and Baking Alkyd Primer for Vehicles and Equipment.
- .2 CAN/CGSB-1.88-92, Gloss Alkyd Enamel, Air Drying and Baking.
- .3 CAN/CGSB-1.104-M91, Semigloss Alkyd, Air Drying and Baking Enamel.

.4 Health Canada / Workplace Hazardous Materials Information System (WHMIS)
- .1 Material Safety Data Sheets (MSDS).

.5 Underwriters Laboratories of Canada (ULC)
- .1 CAN/ULC-S102-07, Standard Method of Test for Surface Burning Characteristics of Building Materials and Assemblies.

1.3 ACTION AND INFORMATIONAL SUBMITTALS

.1 Submit in accordance with Section 01 33 00 - Submittal Procedures.

.2 Product Data:
- .1 Submit manufacturer's printed product literature and data sheets for post and panel demountable partitions and include product characteristics, performance criteria, physical size, finish and limitations.

.3 Samples:
- .1 Submit one representative model of each type partition.
  - .1 Indicate basic construction, glazed sections, door frames, trim, and finishes.
- .2 Submit duplicate 200 x 300 mm samples of panel colours, textures and finishes and 300 mm long samples of trim options for colour selection by Departmental Representative.
- .3 Submit sample of ceiling fixing device.

.4 Test Reports:
.1 Submit test reports in accordance with Section 01 45 00 - Quality Control, from approved independent testing laboratory, certifying partition system complies with sound transmission rating, fire hazard classification as specified.

1.4 DELIVERY, STORAGE AND HANDLING

.1 Deliver, store and handle materials in accordance with Section 01 61 00 - Common Product Requirements and with manufacturer's written instructions.

.2 Delivery and Acceptance Requirements: deliver materials to site in original factory packaging, labelled with manufacturer's name and address.

.3 Storage and Handling Requirements:
.1 Store materials indoors in dry location and in accordance with manufacturer's recommendations in clean, dry, well-ventilated area.
.2 Store and protect post and panel demountable partitions from nicks, scratches, and blemishes.
.3 Replace defective or damaged materials with new.

.4 Packaging Waste Management: remove for reuse and return by manufacturer pallets, crates, padding, and packaging materials as specified in Construction Waste Management Plan in accordance with Section 01 74 21 - Construction/Demolition Waste Management and Disposal.

1.5 DESCRIPTION DU SYSTÈME

.1 The system is essentially composed of full height partitions, from one and only manufacturer, composed of a metal frame covered by 2 faces of demountable cement board.

1.6 QUALITY ASSURANCE

.1 Construct mock-ups in accordance with Section 01 45 00 - Quality Control.

.2 Construct 2 actual size mock-ups of each type of partition.

.3 Allow 24 hours for inspection of mock-up by Departmental Representative before proceeding with ceiling work.

.4 When accepted, mock-up will demonstrate minimum standard for this work. Mock-up may remain as part of the finished work.

1.7 WASTE MANAGEMENT AND DISPOSAL

.1 Separate waste materials for reuse and recycling in accordance with Section 01 74 21 - Construction /Demolition Waste Management and Disposal.

.2 Remove from site and dispose of packaging materials at appropriate recycling facilities.

.3 Collect and separate for disposal paper, plastic, polystyrene, corrugated cardboard and packaging material in appropriate on-site bins for recycling in accordance with Waste Management Plan (WMP).

.4 Separate for reuse and recycling and place in designated containers Steel, Metal, Plastic waste in accordance with Waste Management Plan.

.5 Place materials defined as hazardous or toxic in designated containers in accordance with Section 01 35 43 - Environmental Procedures.

.6 Handle and dispose of hazardous materials in accordance with CEPA, TDGA, Regional and Municipal, regulations.

.7 Ensure emptied containers are sealed and stored safely in accordance with Section 01 35 43 - Environmental Procedures.

1.8 RECOVERED MATERIAL

.1 Consider that all accessories are new.

.2 Aluminum profiles, finish mouldings, angles and accessories recovered during demolition (must be in good condition) can be re-used to complete the new partitions.

PART 2 - PRODUCTS

2.1 MATERIALS

.1 Partition system: demountable and relocatable, such as the PC350 Architectural wall system.

.2 Aluminum profiles : aluminum alloy AA6063-T5, Aluminium Association.

.3 Finish molding: at the ceiling, next to openings or at the junction of the partitions (internal corners), continuous in clear anodized aluminum with PVC moldings 29 mm in width, color to match existing.

.4 External corners: in clear anodized aluminum 45 mm x 45 mm with PVC expansion joint moldings (2), continuous and color to match existing.

.5 End moldings: at the encounter of continuous window mullions, a clear anodized aluminum U shaped channel covering the partition extremity and enclosing the finish moldings on each side of the partition, dressed with 29 mm expansion moldings at an existing width.

.6 Acoustical insulation and sealant: type recommended by partition manufacturer to achieve STC rating specified.

.7 Accessories: plastic extrusions for batten cover, miscellaneous trim, battens, fasteners, clips, runners or tracks, levelling devices, and other accessories required for installation as recommended by partition manufacturer.

.8 Steel mesh :
- .1 The perimeter walls of the CRA must be resistant to intrusion, equivalent to that of a 200 mm concrete block wall (8 in) or other material reinforced with a steel mesh.
- .2 The mesh must be 19mm rolled steel with at a thickness of 10, with at most 50 mm squared diamond openings; it must be fixed to the exterior of each post with immovable screws or protected by washers at every 600 mm, at each post vertically and at least at every 300 mm horizontally at top plate and sill.
- .3 Provide washers Amico Secura Clips.
- .4 For exact position of steel mesh, refer to plans.

2.2 DECORATIVE VINYL WALL MURAL

.1 Large scale print on a vinyl coated wallcovering.

.1 Dimensions: 7305mm x 2600mm in height. The exact dimensions are to be measured on-site after the partitions are all installed.
.2 Image: Montreal Skyline, watercolor art print of the skyline of Montreal Canada, by Michael Tompsett, available on “fineartamerica.com”.
.3 Acceptable product: large scale vinyl adhesive by Deco Murale inc. or Numér art. No equivalent will be accepted.

PART 3 - EXECUTION

3.1 EXAMINATION

.1 Verification of Conditions: verify conditions of substrates and surfaces to receive post and panel demountable partitions previously installed under other Sections or Contracts are acceptable for product installation in accordance with manufacturer's instructions.
.1 Visually inspect substrate in presence of Departmental Representative.
.2 Inform Departmental Representative of unacceptable conditions immediately upon discovery.
.3 Proceed with installation only after unacceptable conditions have been remedied [and after receipt of written approval from Departmental Representative.

3.2 ERECTION

.1 Install system after floor finishes and in accordance with manufacturer's instructions.

.2 Fasten runners to floors, ceiling and abutting vertical surfaces at 600 mm on center.
.1 At ceilings use fasteners that rigidly support partition without damaging or defacing ceiling panels or grid system members.

.3 Erect partitions plumb, square and level.
.1 Accurately fit and fasten to abutting surfaces.
.2 Shim under partitions at uneven floors to ensure level installation.

.4 Install continuous light/sound seal at junction of ceiling height partitions with floors, ceilings and abutting walls and vertical surfaces.

.5 In partitions where a metal mesh is required, install a metal grill with anchors and washers.

.6 Fasten cement board to vertical joints every 400 mm c/c.

.7 Install aluminum profiles and PVC expansion joints, continuous on the entire length of the partition at the following junctions: partition/ceiling, partition/partition (internal corners).

.8 Provide aluminum corner guards with PVC expansion joints, continuous at all sharp partition corners.

.9 Provide aluminum U channels at all extremities and aluminum profiles with PVC (2) expansion joints, continuous at all extremities of partitions and pressed at all window mullions. Seal all joints.

.10 Install decorative wall mural following the manufacturers recommendations.

.11 Install continuous bands of wall brackets and rigid PVC baseboards at the wall base.

.12 Seal partitions in accordance with Section 07 92 00 - Joint Sealants.

.13 Install partition accessories at exterior and interior corners, at the junction of partitions/ceiling and at the base of partitions. No moulding is required between each gypsum wall board.

3.3 ADJUSTING

.1 Adjust post and panel demountable partitions fit accurately in accordance with manufacturer's written recommendations.

3.4 CLEANING

.1 Progress Cleaning: clean in accordance with Section 01 74 11 - Cleaning.
  .1 Leave Work area clean at end of each day.

.2 Final Cleaning: upon completion remove surplus materials, rubbish, tools and equipment in accordance with Section 01 74 11 - Cleaning.

.3 Waste Management: separate waste materials for reuse or recycling in accordance with Section 01 74 21 - Construction/Demolition Waste Management and Disposal.
  .1 Remove recycling containers and bins from site and dispose of materials at appropriate facility.

3.5 PROTECTION

.1 Protect installed products and components from damage during construction.

.2 Repair damage to adjacent materials caused by post and panel demountable partitions installation.

END OF SECTION

PART 1 - GENERAL

1.1 RELATED REQUIREMENTS

.1 Section 09 53 00 .01 – Acoustical suspension.

.2 Section 09 65 16 – Resilient tile flooring

.3 Section 09 68 13 – Tile carpeting

1.2 REFERENCES

.1 American National Standards Institute (ANSI)
- .1 ANSI A208.1-99, Particleboard, Mat-Formed Wood.
- .2 ANSI A208.2-02, Medium Density Fiberboard (MDF) for Interior Application.

.2 American Society for Testing and Materials International (ASTM)
- .1 ASTM E 90-04, Standard Test Method for Laboratory Measurement of Airborne Sound Transmission Loss of Building Partitions and Elements.
- .2 ASTM E 336-05, Standard Test Method for Measurement of Airborne Sound Insulation in Buildings.

.3 Canadian General Standards Board (CGSB)
- .1 CAN/CGSB-11.3-M87, Hardboard.

.4 Canadian Standards Association (CSA International)
- .1 CSA O115-M1982(R2001), Hardwood and Decorative Plywood.
- .2 CSA O151-04, Canadian Softwood Plywood.

.5 Forest Stewardship Council (FSC)
- .1 FSC-STD-01-001-2004, FSC Principle and Criteria for Forest Stewardship.
- .2 FSC-STD-20-002-2004, Structure and Content of Forest Stewardship Standards V2-1.
- .3 FSC Accredited Certification Bodies.

.6 Underwriters Laboratories' of Canada (ULC)
- .1 CAN/ULC-S102-03, Method of Test for Surface Burning Characteristics of Building Materials and Assemblies.

1.3 DESIGN REQUIREMENTS

.1 Design and fabricate folding partitions with minimum STC tested to ASTM E 90.

.2 Use vinyl fabric for covering with maximum:
- .1 flame spread -25;
- .2 fuel contributed -35;
- .3 smoke developed -50; when tested to CAN/ULC-S102.

1.4 ACTION AND INFORMATIONAL SUBMITTALS

.1 Provide submittals in accordance with Section 01 33 00 - Submittal Procedures.

.2 Product Data:
- .1 Submit manufacturer's printed product literature, specifications and datasheet and include product characteristics, performance criteria, physical size, finish and limitations.

.3 Shop Drawings:
- .1 Submit drawings stamped and signed by professional engineer registered or licensed in Province of Quebec, Canada.
  - .1 Indicate installation requirements including dimensions, head and jamb conditions, track layout, stacking arrangement, switching, hardware, finish and colour, operating mechanism, [electrical requirements] and location.

.4 Samples:
- .1 Submit duplicate 300 x 300mm samples of partition finish for each colour selected.

.5 Submit required letters, calculations, spreadsheets and templates prepared by Departmental Representative for submitting to CaGBC for Credit Interpretation Requests.

.6 Submit Project Materials and Cost Data: provide statement for total cost for building materials used for project.
- .1 Include statement indicating total cost of mechanical and electrical components.

.7 Quality assurance/control submittals: submit following in accordance with Section 01 45 00 - Quality Control.
- .1 Test reports: submit certified test reports for folding panel partitions from approved independent testing laboratories, indicating compliance with specifications for specified performance characteristics and physical properties.
- .2 Submit test data indicating compliance with design requirements regarding sound transmission and fire hazard classification.
- .3 Submit acoustical test data to ASTM E 90 and ensure construction details and weight are provided.
- .4 Certificates: submit certificates signed by manufacturer certifying that materials comply with specified performance characteristics and physical properties.
- .5 Manufacturer's Instructions: submit manufacturer's installation instructions. Indicate special handling criteria, installation sequence, cleaning procedures.
- .6 Manufacturer's Field Reports: manufacturer's field reports specified.

.8 Closeout Submittals:
- .1 Provide operation and maintenance data for folding panel partitions for incorporation into manual specified in Section 01 78 00 - Closeout Submittals.

1.5 WASTE MANAGEMENT AND DISPOSAL

.1 Separate waste materials for reuse and recycling in accordance with Section 01 74 21 - Construction/Demolition Waste Management and Disposal.

PART 2 - PRODUCTS

2.1 MATERIALS

.1 Foldable partition : SERIE 5500 pair panel manufactured by Corflex or equivalent approved by the Departmental Representative.

.2 The panels shall have a nominal thickness of 92mm (3 5/8'') and be the manufacturer's standard width. The sides of the panels must be removable and can be replaced on site. U shaped 1.3mm steel (gauge 18) will be installed horizontally inside all panels and will be spaced from 610mm to 762mm (24 to 30'') c/c. the U shaped will have dimensions of 51 x 51mm (2'' x 2'') and will provide resistance to impact and torsion.

.1 The frame will wrap the entire perimeter of the panel, providing protection to the liner when handling and moving the movable partition. The framing of the panel will be made of 1.6mm (16 gauge) steel at the minimum with a colored paint-powder finish, the color of the choice of the Departmental Representative.

.1 All vinyl and polyvinyl chloride lining must match the framing color, in the standard color range of framing manufacturer.

.2 Vertical soundproofing joints will consist of a rigid polyvinyl chloride, continuous, to insure an acoustical barrier. It will be installed on the edge of each panel, guiding the installation and will distribute the impact on the entire panel.

.3 Horizontal sealant joints will not exceed the width of panels to prevent damage during handling. The retractable seal on the lower part of the partition will be made with folded steel and will be provided with 6mm vinyl seals for proper soundproofing when operated.

.1 Retractable seal at the top of the partition will be made of folded steel and will be provided with 6mm vinyl seals for proper soundproofing when operated and will be deployed simultaneously with the lower seal when activated.

2.2 SUSPENSION SYSTEM

.1 Suspension system will consist of an anodized tempered aluminum rail of architectural quality (folded steel rail will be unacceptable) and secured to the frame with rods installed in pairs and supplied by the manufacturer. Guiding rods will ensure perfect alignment of rail joints. The ceiling guard must be integral, and integral with the rail. It must have a 25 mm clearance to avoid contact of the panels with the ceiling. A section of the rails must be removable to allow the panels to be removed for later maintence.

.2 Each panel will be suspended with a slide on four sealed steel ball bearing heels and covered with Derlin. Horizontal slide will not be accepted. A written report demonstrating that an endurance test covering a distance of 160km has been completed and should be available on request.

2.3 FINISHES

.1 Type of panel finish will be:

.1 Vinyl with a minimum weight of 425g/m (15oz/vl) factory applied and selected from the manufacturer's standard range.

2.4 OPERATING

.1 Panels must be hung and moved manually.

.1 Retractable horizontal seals will be operated by a removable crank located approximately 1066mm (42'') from the floor on the edges of the panel. Activation of the seals will not require rotation of more than 180 degrees of the crank. The horizontal seal on the bottom of the wall must have a nominal clearance of 51mm to facilitate panel handling and to accommodate some deflection of the beam or the levelling of the floor. Stabilizing pressure must be exerted by the joints when they are lowered. Drop-type horizontal joints are note acceptable.

.2 A compression mechanism, accessible from both sides, will allow the final locking of the movable partition using a removable crank. It will be the same finish as the movable partition and will adapt to a slightly off-level wall. It will exert a pressure of 250lbs against the wall or the niche door ensuring optimal soundproofing.

.2 Acoustic integrity of the first deployed panel will be provide by one:
.1 Double roll mounding compressed against the wall.

2.5 ACCOUSTICAL PERFORMANCES

.1 A copy of the acoustic test report certifying that the portable partition has been tested by an accredited independent laboratory shall be provided. The tested partition will be fully functional, having a dimension of 4267mm x 2743mm (14’-0’’ x 9’-0’’) and meet ASTO-E90 standards. The results of the test will be similar or exceed the performance required in the estimate. The acoustic test will indicate the weight and composition of the panels as well as the type of seals tested.

.2 Sound Transmission Class STC
.1 52 STC

PART 3 - EXECUTION

3.1 MANUFACTURER'S INSTRUCTIONS

.1 Compliance: comply with manufacturer's written recommendations or specifications, including product technical bulletins, handling, storage and installation instructions, and datasheets.

3.2 INSTALLATION

.1 Secure and level track.

.2 Install folding partitions in accordance with manufacturer's printed instructions.

.3 Touch up damaged finishes, repair damage to partitions to match original finish.

.4 Clean folding partition system and protect from damage.

.5 Adjust and leave partitions in smooth operating condition.

3.3 FIELD QUALITY CONTROL

.1 Site Tests:
.1 Acoustic field testing: have field sound performance certified byindependent acoustical consultant in accordance with ASTM E 336.

.2 Manufacturer's Field Services:
.1 Obtain written report from manufacturer verifying compliance of Work, in handling, installing, applying, protecting and cleaning of product and submit Manufacturer's Field Reports as described in PART 1 - SUBMITTALS.
.2 Provide manufacturer's field services consisting of product use recommendations and periodic site visits for inspection of product installation in accordance with manufacturer's instructions.
.3 Schedule site visits, to review Work, as directed in PART 1 - QUALITY ASSURANCE.

3.4 CLEANING

.1 Proceed in accordance with Section 01 74 11 - Cleaning.

.2 On completion and verification of performance of installation, remove surplus materials, excess materials, rubbish, tools and equipment.

END OF SECTION

PART 1 - GENERAL

1.1 REFERENCES

.1 The Aluminum Association Inc. (AAI)
- .1 AAI DAF45-2003, Designation System for Aluminum Finishes - 9th Edition.

.2 American Society for Testing and Materials International (ASTM)
- .1 ASTM A 490M-ae1, Standard Specification for High-Strength Steel Bolts, Classes 10.9 and 10.9.3, for Structural Steel Joints Metric.
- .2 ASTM A 653/A 653M-06a, Standard Specification for Steel Sheet, Zinc-Coated, (Galvanized) or Zinc-Iron Alloy-Coated (Galvannealed) by the Hot-Dip Process.

.3 Canadian General Standards Board (CGSB)
- .1 CAN/CGSB-1.81-M90(R1990), Air Drying and Baking Alkyd Primer for Vehicles and Equipment.
- .2 CAN/CGSB-1.88-92, Gloss Alkyd Enamel, Air Drying and Baking.
- .3 CGSB 31-GP-107Ma-90, Non-inhibited Phosphoric Acid Base Metal Conditioner and Rust Remover.

.4 Canadian Standards Association (CSA International)
- .1 CSA-G40.20-04/G40.21-04, General Requirements for Rolled or Welded Structural Quality Steel/Structural Quality Steel.
- .2 CSA W59-03, Welded Steel Construction (Metal Arc Welding).

.5 Workplace Hazardous Materials Information System (WHMIS)
- .1 Material Safety Data Sheet (MSDF)

1.2 DESIGN REQUIREMENTS

.1 Design shelving to accommodate vertical adjustment of shelves in 50 mm increments and to permit easy assembly, expansion, dismantling and re-use of shelving component parts.

1.3 ACTION AND INFORMATIONAL SUBMITTALS

.1 Provide submittals in accordance with Section 01 33 00 - Submittal Procedures.

.2 Submit shop drawings:
- .1 Indicate shelving layouts, number of bays, number of shelves, number and size of drawers, bins, number of dividers, system of bracing and anchoring devices.

.3 Samples:
- .1 Submit representative sample bay of specified shelving showing finish colour and including accessories.

.4 Quality control submittals: submit following in accordance with Section 01 45 00 - Quality Control.
- .1 Manufacturer’s Instructions: submit manufacturer’s installation instructions and special handling criteria, installation sequence and cleaning procedures.
- .2 Manufacturer’s Field Reports: submit manufacturer’s written reports within 3 days of review, verifying compliance of Work, as described in PART 3 - FIELD QUALITY CONTROL.

1.4 QUALITY ASSURANCE

.1 Pre-Installation Meetings: convene pre-installation meeting one week prior to beginning work of this Section and on-site installation, with contractor's representative and Departmental Representative in accordance with Section 01 32 16.06 - Construction Progress Schedule - Critical Path Method (CPM) Section 01 32 16.07 - Construction Progress Schedule - Bar (GANTT) Chart to verify project requirements.

1.5 DELIVERY, STORAGE AND HANDLING

.1 Packing, shipping, handling and unloading:
- .1 Deliver, store and handle materials in accordance with Section 01 61 00 - Common Product Requirements.

.2 Waste Management and Disposal:
- .1 Separate waste materials for reuse or recycling in accordance with Section 01 74 21 - Construction/Demolition Waste Management and Disposal.

PART 2 - PRODUCTS

2.1 MATERIALS

.1 Galvanized steel sheet: commercial grade.

.2 Welding materials: to CSA W59.

.3 Aluminum sections and plates: AAI alloy AA 6063-T5.

.4 Aluminum bolts, nuts and washers: AAI alloy AA 6061-T6.

.5 Shelving:
- .1 Storage shelving:
  - .1 Size: see drawings.
  - .2 Reference product: the description of the components are based on the Illico System from Rhô Inc., or equivalent approved.

2.2 COMPONENTS

.1 Uprights:
- .1 Roll formed aluminum angles or tees with perforations to accommodate shelves and other components.
- .2 Size and thickness of angles or tees to support specified total load.

.2 Provide accessories and all other fastening elements necessary and recommended by the manufacturer in order to complete the system as drawn on plans.

.3 Provide bearing units with adjustment band, to support the acrylic panel.

.4 Provide a patterned film for the acrylic panel which will be custom chosen.

PART 3 - EXECUTION

3.1 MANUFACTURER'S INSTRUCTIONS

.1 Compliance: comply with manufacturer's written recommendations or specifications, including product technical bulletins, handling, storage and installation instructions, and datasheets.

3.2 INSTALLATION

.1 Do metal storage shelving work except where specified otherwise.

.2 Install metal storage shelving in accordance with reviewed layout.

.3 Brace, secure and anchor shelving units in place.

.4 Make good baked enamel surfaces damaged during shipment or installation.

3.3 FIELD QUALITY CONTROL

.1 Manufacturer's Field Services:

.1 Provide manufacturer's field services consisting of product use recommendations and periodic site visits for inspection of product installation in accordance with manufacturer's instructions.

3.4 CLEANING

.1 Proceed in accordance with Section 01 74 11 - Cleaning.

END OF SECTION

ANNEX A

Building Orientation Guide – Part 1/2

Building Orientation Guide – Part 2/2

Brookfield Johnson Controls

GUIDE D'ORIENTATION À L'IMMEUBLE
PARTIE 1/2
POLITIQUES DE SANTÉ, SÉCURITÉ ET ENVIRONNEMENT

ENTREPRENEURS

HS-105-00(Fr)

Rév. 3 – 12 janvier 2015

Poste/Fonction	Prénom	Nom	Organisation	Téléphone
Gestionnaire immobilier	Giacinto	Emanuele	Brookfield Johnson Control	438-777-9509
Chef d'équipe de maintenance	Éric	Manfé	Brookfield Johnson Control	438-825-3075
Coordonnateur (-trice) SSE (Santé, Sécurité & Environnement)	Jean-Jacques	Labrecque	Brookfield Johnson Control	438-821-9761
Chargé de projet principal senior	Daniel	Szuber	Brookfield Johnson Control	438-820-5362
Coordonnateur (-trice) des services aux locataires	Céline	Faubert	Brookfield Johnson Control	514-668-2384
Coordonnatrice des immeubles et des installations	Stéphanie	Halpin	Brookfield Johnson Control	438-823-5283
Coordonnateur (-trice) des immeubles et des installations	Nadia	Pineau	Brookfield Johnson Control	514-882-3193
Superviseur de site (sécurité)	Maxime	Trudel	Corps Canadien des Commissionnaires	514-844-7086
Salle de contrôle (sécurité)	-	-	Corps Canadien des Commissionnaires	514-844-6459
Poste de garde	-	-	Corps Canadien des Commissionnaires	514-844-6845
Services d'urgence	-	-	Services municipaux	911

*** Permit To Work ***

The Facility Management team has directed you to complete a « PERMIT TO WORK », then no work may commence until after the appropriate permit has been completed and has been approved by the Facility Management team.
A copy can be found in **Appendix D** of the present document or an electronic copy is available on the following link:
http://www.snclavalinom.com/en/SharedSupportServices/StrategicProcurement/PermitToWork.aspx

1. General Information

1.1. The purpose of this orientation handbook is to inform SNC-Lavalin O&M employees, contractors, and subcontractors of the procedures, rules and protocols to be followed in this building, before work begins and while work is being carried out, as well as to describe the risks specific to this buildings. It is the responsibility of the contractor, as Prime Contractor, to distribute and thoroughly explain the information contained in this handbook to all his employees and subcontractors.

1.2. The site-specific risk assessment for this building can be found in **Appendix A**.

2. Contractor's Roles and Responsibilities

2.1. In accepting the work contract, the contractor agrees to take charge of all duties normally overseen by the Prime Contractor.

2.2. The contractor is required to inform the SNC-Lavalin O&M (Operations & Maintenance) Building Services Coordinator or project manager in charge immediately if another contractor is hired either by PWGSC or by SNC-Lavalin O&M to work at the site, so as to coordinate their respective work and to make sure that the contractor has not been released from his responsibilities as Prime Contractor.

2.3. Prior to the start of work, the contractor is required to provide his own assessment of the site-specific risks associated with his activities and the measures that will be taken to eliminate the risks described therein.

3. Health & Safety

3.1. General
All workers must comply with the legal health and safety obligations under the Safety Code for the Construction Industry and the Act respecting Occupational Health and Safety (CSST), as well as SNC-Lavalin's specific requirements, instructions and procedures outlined in this handbook, without being limited to same. Throughout the project, work areas will be inspected by the Health & Safety Coordinator, the Maintenance Supervisor, the SNC-Lavalin O&M project manager in charge, or any other employee assigned or mandated by SNC-Lavalin. Findings and inspection reports will be kept in the contractor's performance file. Should any deficiencies or health and safety violations be observed, SNC-Lavalin personnel are authorized to stop the work immediately.

3.2. WHMIS material safety data sheets
The contractor shall have up-to-date data sheets for all hazardous products governed by WHMIS that are used or brought into the building. These data sheets are to be kept at the work site for consultation of hazards when using the products, and to inform physicians in the event of an accident with the products.
Moreover, the contractor shall make sure that the workers are aware of the risks associated with the products being used and that they have – and wear – the appropriate personal protective equipment. In addition, the workers must be sure to check whether fumes from certain products could seep into the various ventilation systems and either cause incidents or disturb clients.

3.3. Lock-out procedure and isolation request

Because in this industry, the risks and consequences associated with lock-out activities are high, it is very important to be aware of the proper lock-out instructions and procedures. They must also be applied and followed at all times. The purpose of lock-out instructions and procedures is to ensure that no equipment may be accidentally started up, pressurized or energized while an employee is working on it.

Before beginning upkeep, maintenance or repairs on any equipment, workers must make sure that all possible energy sources are eliminated so as to protect their own health, safety and physical integrity as well as that of others.

For all maintenance, inspection or repair work, an isolation (power shutdown) request must be filled out and approved by SNC-Lavalin O&M personnel, in collaboration with the SNC-Lavalin O&M representative. Isolation request binders can be found in the electrical rooms.

The contractor's lock-out procedure must be submitted in writing to the SNC-Lavalin O&M representative for approval before work begins. If the contractor is unable to provide his own lock-out procedure, the SNC-Lavalin O&M procedure will be used.

For information purposes, a sample document **(Appendix B)** is attached at the end of this handbook so that the contractor can become familiar with SNC-Lavalin O&M directives and ensure they are followed.

3.4. Welding – cutting – grinding (hot work)

Authorization (i.e., a hot work permit) is required for any work that produces heat, smoke or sparks (welding, cutting, use of a grinder, etc.)

This authorization (permit) is issued by SNC-Lavalin O&M Building Operations for the building in which the work is to be done, and filled out by Building Operations or the SNC-Lavalin O&M representative, in collaboration with the contractor. Arrangements must be made 48 hours in advance, whenever possible. No hot work may be carried out without a hot work permit.

The contractor must have his hot work permit with him (on site) when performing work requiring a hot work permit.

For information purposes, a sample document **(Appendix C)** is attached at the end of this handbook so that the contractor can become familiar with the details and instructions outlined on the hot work permit used by SNC-Lavalin O&M and ensure they are followed.

3.5. Working in confined spaces

Because in this industry, the risks and consequences associated with confined spaces are high, it is very important to be aware of the proper instructions and procedures for entering and working in such spaces. They must also be applied and followed at all times. All work in confined spaces must be performed by employees who have been trained and have obtained proof of competency to perform such work.

Most confined spaces are identified by a coloured flag and characterized by degree of risk: 3 – red – high risk; 2 – yellow – medium risk; and 1 – blue – low risk. The number associated with each refers to a data sheet available from SNC-Lavalin O&M Building Operations.

For entry into a Type 2 or Type 3 confined space, authorization (i.e., a permit) must be issued by SNC-Lavalin O&M Building Operations or its representative prior to the start of work, and must be signed by the worker(s) and supervisor. Workers must read the hazard assessment form (data sheet) drawn up for each confined space, prior to filling out and signing the permit.

Any worker who is unable to prove, before work begins, that he or she has received the required training and obtained a competency card from a certified training organization will be refused entry into the confined space.

3.6. Electrical work

As per CSA Standard Z462-2012, all workers carrying out electrical work at our facilities must at least wear long-sleeved clothing that will not melt or that is made of untreated natural fibres, or as applicable, arc-rated clothing appropriate to the category of risk associated with the task being carried out.

4. Varia

4.1. Asbestos

☒ Does not apply. According to the most recent information received, this building **is not known** to have materials that may contain asbestos.

☐ Applies. According to the most recent information received, this building **is known** to have materials that may contain asbestos.

Anyone who discovers or suspects the presence of materials that might contain asbestos should immediately notify the project manager in charge and/or the SNC-Lavalin O&M representative on site, before going ahead with the work.

If applicable, the exact locations where asbestos is present are stipulated in the *Plan de gestion de l'amiante* (asbestos management plan or PGA) binder kept in the Building Technician's office.

Asbestos must be removed by a specialized, accredited company.

Prior to the start of work, the contractor must fill out a form for work involving exposure to asbestos (ref. Section 10.1 of the PGA), a training certification form (ref. Section 10.2 of the PGA) and a contractor's notification and consent form (ref. Section 10.3 of the PGA), and have them approved by SNC-Lavalin O&M's representative.

4.2. Petroleum product storage systems

☐ Does not apply. There is no storage system for petroleum products in this building.

☒ Applies. This building has one or more storage systems for petroleum products.

☐ The system is governed by the federal Storage Tank Systems for Petroleum Products and Allied Petroleum Products Regulations

One or more systems on site are governed by the federal Storage Tank Systems for Petroleum Products and Allied Petroleum Products Regulations (SOR/2008-197); consult the Maintenance Supervisor or Environment Specialist for more information.

4.3. Equipment containing halocarbons

For any work on equipment containing halocarbons, the contractor shall comply with Federal Halocarbon Regulations (FHR 2003), SNC-Lavalin O&M procedures and Refrigerant Code of Practice requirements.

Any leak tests or maintenance, repairs or modifications performed on equipment and involving a risk of halocarbon loss must be recorded in a service log and in the equipment maintenance log.

Any halocarbon loss or leakage must be reported immediately to the SNC-Lavalin O&M representative on site.

4.4. Work and storage area cleanliness

The contractor is responsible for work area cleanliness. The work area must be cleaned on a daily basis and following project completion.
It is up to the contractor to remove debris and materials.
The building cleaning service is not responsible for cleaning the area while work is in progress or immediately following project completion.

4.5. Site signage

Bilingual signs must be visible at each work site, indicating the physical risks and hazards to workers, occupants and visitors.

4.6. Tools and equipment

The contractor must make certain that he has all the necessary equipment, tools, materials and machinery at his disposal to perform the required work. No tools, equipment, materials or machinery will be loaned by SNC-Lavalin O&M.

4.7. Combustion engines

The use of internal combustion-driven tools or equipment (gasoline, propane, etc.) is strictly prohibited in all parts of the building, including the basements, mechanical rooms, penthouse and warehouse. Authorization is required for the use of tools such as propane welding torches or similar items (see paragraph 3.4).

4.8. Powder-actuated tools

The use of Ramset-type powder-actuated nail guns is strictly prohibited.

4.9. Roof access

4.9.1. Access to the roof is prohibited unless approved by the SNC-Lavalin O&M representative. Workers and subcontractors must wear safety harnesses and use permanent rooftop anchors.

Safety procedures and instructions are posted on all doors.

4.9.1.1. **Use of permanent rooftop safety anchors**

The use of rooftop safety anchors, where such exist, is prohibited without the agreement of the SNC-Lavalin O&M representative.
The contractor shall comply with the instructions and installation drawings on existing equipment, and shall respect the load limitations defined for said equipment.

Workers and subcontractors are required to be attached or to put in place some other means of fall protection safety when working less than three metres (10 feet) from the edge of the roof.

5. General Information and Emergency Procedures

SNC-Lavalin O&M Building Management Services and the Client-tenant have agreed on the rules and procedures that apply to all persons required to work inside and/or outside the building. This list is not limited to the items mentioned therein, and may be subject to change with no prior notification.

No service interruptions without prior authorization

5.1. Service interruptions with prior authorization

Forty-eight (48) hours' prior authorization is required to:

- Gain access to confined spaces;
- Gain access to the building and/or the roof;
- Obtain keys;
- Obtain a hot work permit;
- Obtain a parking permit;
- Shut down a protection, electrical or mechanical system.

For information purposes, a sample assessment form **(Appendix A)** is attached at the end of this handbook so that the contractor can become familiar with SNC-Lavalin O&M directives and ensure they are followed.

5.2. Bypassing fire alarms

Arrangements to bypass fire alarms or sprinkler systems must be made 48 hours in advance and outside working hours. The necessary authorizations must also be requested and received 48 hours in advance.

WARNING

The contractor shall ensure that his work does not inadvertently set off the alarm for any of the building protection systems (fire alarm, intruder detection, mechanical systems, etc.).
If an alarm is set off, the contractor shall be responsible for the costs associated with interruptions to building client operations as well as any costs charged to SNC-Lavalin O&M by the various institutions for a false alarm.
Fifteen (15) days' prior authorization is required for all work affecting client operations.

5.3. Emergency procedures

5.3.1. **Accidents and incidents**

Contractors:
Immediately inform the SNC-Lavalin O&M representative, or contact the National Call Centre, 24/7, at 1-800-463-1850.

SNC-Lavalin O&M personnel:
Use the SNC-Lavalin O&M incident reporting procedure

5.3.2. **Mechanical breakdowns and emergencies**
Any water damage, mechanical breakdown or other problems must be reported to SNC-Lavalin Representative (during the day) or the Security at 514-283-3210.

5.4. Fire

If a fire is detected, proceed to the nearest manual fire station (pull box), pull the lever, and evacuate the premises.

5.4.1. **Evacuation plan in case of fire**
A copy of the emergency evacuation plan is posted near each elevator and stairwell.

5.4.2. **Fire alarm**
If you hear the fire alarm, evacuate the building immediately by the nearest emergency exit and move at least 100 metres away from the building.

5.4.3. **Your building's alarm system**

Your building has a two-stage alarm system:

- **Peparatory signal – rate of 20 beats per minute (slow)**
  - Wait for instructions before evacuating
- **Evacuation signal – rate of 120 beats per minute (fast)**
  - Evacuate the building immediately by the nearest emergency exit and assemble at the meeting point if one has already been assigned, or move at least 30 metres away from the building.

5.4.4. **Evacuation plan in case of fire**
Workers must take note of evacuation plans and instructions, which are posted near each elevator and stairwell.

5.4.5. **Evacuation**

You must establish a meeting point outside the building (Congres Center esplanade) and appoint someone to be in charge of counting employees. If any employees are missing when called, immediately report the last known location of the missing employee(s) to the security desk.

5.4.6. **Walkie-talkie and cellular telephone users**
If one of the following codes: 10-25, 10-10 or 10-30, is heard through the radio or voice communication system, immediately interrupt all radio and/or cellular communications until otherwise notified and remain alert for further instructions.

5.4.7. **Heat and smoke detectors**
The building is protected by heat and smoke detectors, which are linked to a central monitoring station.
All work, including housekeeping work, carried out in areas equipped with smoke detectors must be authorized by the SNC-Lavalin O&M representative, as the building's smoke detectors also detect dust, humidity, etc.
Contractors will be charged for any service interruptions harmful to the client's operations if they neglect to have the detectors disarmed before starting work.

5.4.8. **Sprinkler system**
The building is protected by a sprinkler system, any work done near it must be done with great precautions. All work related to it must be done between 6pm and 4am and request an authorisation from CGF security.

5.4.9. **Manual pull stations**
Manual fire stations (pull boxes) are located near the stairwells and near each exit.

5.4.10. **Portable extinguishers and fire hoses**
Firefighting stations are installed near the elevators and stairwells, and in the main corridors. Signs are posted indicating their locations (see evacuation plans).

5.4.11. **Fire alarm panel**
The fire alarm control panel is located at the security, suite 116.

5.5. Building access procedures

5.5.1. **Intruder alert system**
The contractor shall not be given access to alarm system security codes. System shutdown and start-up, as well as any work done on said system, must be performed by an SNC-Lavalin O&M employee or representative. Specialized contractors conducting inspections or work on the system must provide prior notice to an SNC-Lavalin O&M representative.

5.5.2. **Building operating hours**
Operation hours are from 7:00 am to 6:00 pm, Monday through Friday.

5.5.3. **Building access outside normal operating hours**
A request must be submitted by the General Contractor and his subcontractors to the SNC-Lavalin O&M representative in charge, at least 48 hours prior to the start of work. They must always be accompanied by an SNC-Lavalin O&M employee or security guard. If the work will affect the normal operations of the building or its occupants, the contractor shall advise SNC-Lavalin O&M two weeks in advance.

5.5.4. **Meeting point outside usual working hours**
The meeting point for contractors and O&M employees and/or security guards is located at the security desk, level 1, suite 116.

5.5.5. **Security / Identification**

☐ Does not apply. The building does not offer security services.

☒ Applies. The building offers a security service.

All employees working on the site must register at the security desk when they arrive, and ID cards issued by Building Security must be visible at all times. The attendance list, working hours, and names and telephone numbers of contractors or their representatives working in the building must be submitted to the project manager in charge or his or her representative for project and site control purposes.

5.5.6. **Parking**

☐ No parking is available

☒ Parking is permitted when authorized by the SNC-Lavalin O&M representative, as long as there are spaces available.

5.5.7. **Noisy work**
Working hours are described on the contract. All noisy work must be done between 6:00pm and 10:00pm and approved by the SNC-Lavalin O&M representative.

5.5.8. **Deliveries**
All deliveries must be made through the loading platform situated 1125 Jeanne-Mance Str. and must be approved by the SNC-Lavalin O&M representative.

5.5.9. **Loading dock**
No parking is allowed on the loading dock. Regular operation hours are from 7:30am to 4:00pm. Employees and customers have priority. All security measure must be respected.

Access must be approved by SNC-Lavalin O&M representative for work on week-end or operation hours.

Height to access the loading dock is 12’6 ft or 3,80m.

5.5.10. **Passenger/freight elevators and loading dock levellers**
The use of passenger or freight elevators is subject to conditions and to approval by the SNC-Lavalin O&M representative.
The use of loading dock levellers is also subject to conditions and to approval by the SNC-Lavalin O&M representative.
Any work on or manipulations to the mechanisms of this equipment requiring the maintenance contractor to travel to the site shall be billed to the contractor responsible.

5.5.11. **Storage of equipment and materials**
The storage of equipment and materials must be approved by the SNC-Lavalin O&M representative based on building availability. No equipment or materials may be stored in the hallways, even temporarily.

5.5.12. **Electrical panels**
Any employee qualified to carry out electrical work must obtain prior authorization from the SNC-Lavalin O&M representative and apply the lock-out procedure. The contractor’s lock-out procedure must be submitted in writing to the SNC-Lavalin O&M representative or the Health & Safety Coordinator for approval before work begins.
The contractor must advise the Maintenance Supervisor or his or her representative of every modification made to an electrical panel.

5.5.13. **Electrical rooms**
The electrical rooms must always remain clean and accessible.

No equipment or materials may be stored in the electrical rooms.

5.5.14. **Emergency exits**
The emergency exits must always remain clean and accessible.
No equipment or materials may be stored in the emergency exit areas.

5.5.15. **Toilets**
Workers must use the toilets indicated by the SNC-Lavalin O&M representative.

5.5.16. **Tobacco, drugs and alcohol policy**
There is no smoking inside the building.

SNC-Lavalin O&M has a zero tolerance policy toward the use of drugs and alcohol on the job by its employees and representatives; this also includes contractors.

6. Additional Information

See appendices.

Health & Safety – Site-Specific Risk Assessment

****In viewing this document, the contractor confirms that he has been informed of the site-specific risks and is, therefore, responsible for informing his employees or subcontractors of its contents prior to undertaking work in this building.**

This list is for information purposes only and risks are not limited solely to those enumerated.
SNC-Lavalin O&M is not liable for any identification or omission errors.

Building number (SNC-Lavalin): W300582

Building address: Montreal, Guy Favreau (Tower)

Check the boxes to identify site-specific risks.			
High pressure steam	NA	Electricity – substation	NA
Petroleum product storage system	NA	Elevating work platform (scissor lift)	X
Work at heights	X	Fixed or articulated boom lift (cherry picker)	X
Hot work (welding, gas cutting, etc.)	X	Forklift	NA
Asbestos	NA	Loading dock leveller	NA
Arc flash	X	Truck unloading area	NA
Elevator – mechanical room	X	Winches, hoists, overhead cranes	NA
PCBs	NA	Loading zone (dock)	NA
Thermal plant	NA	**Roof access**	
Battery room – hydrogen and acid	N/A	Fixed wall ladder (exterior)	X
Hazardous materials	X	Fixed wall ladder (interior)	X
Natural gas line	NA	No fixed wall ladder *(portable ladder required for roof access)*	N/A
Oil line	NA	Via stair or elevator	NA
Confined space	X	**Other (e.g.: pool, laboratory)**	
Compressed air	NA		
Fire alarm	X		
Glycol water	NA		
Presence of lead (e.g.: firing range)	N/A		
Electricity – overhead power line	N/A		
Electricity – panelboards	X		

Building:	
Electrical Power Supply Isolation Request	# Work order:
Authorized by:	**Date:**

Reason:
Preventive maintenance: Weekly ☐ Monthly ☐ Quarterly ☐ Semi-annual ☐ Annual ☐

Repair ☐ Breakdown ☐ Project ☐

Name and/or number of equipment to be isolated:	Voltage:

Start of isolation	**End of isolation**
Date: Time:	Date: Time:
By (name in block letters and signature):	By (name in block letters and signature):

Company (name & address):

Lock-out/Tag-out procedure

Procedure for isolating and restoring to operation: Everyone working on the equipment must participate in the lock-out procedure and apply his or her own padlock. The various energy sources must be locked out in the order described, to ensure workers and equipment are protected.

Name and/or number of equipment to be isolated:

Water ☐ Steam ☐ Electricity ☐ Compressed air ☐ Gas ☐ System drains ☐

	Taken out of service	Put back in service	Tag removed
1-			
2-			
3-			
4-			
5-			
6-			
7-			
8-			
9-			

By:	By:
Signature:	Signature:
Date & time:	Date & time:

Name (block letters) and signature of all individuals working on the equipment:	
1.	
2.	
3.	
4.	
5.	
6.	
7.	
8.	

SNC- Lavalin O&M- HOT WORK PERMIT
Precautions Checklist

Before issuing the permit: Can the work be done any other way or in the workshop?
IMPORTANT: Precautions Checklist must be followed

REF : NATIONAL FIRE CODE OF CANADA (SECTION 5.2)

Person Doing Work: Fill in start time and hang in a highly visible position near hot work operation. When operation complete, fill in finish time.

Time Started: _____ Time Completed:_____

Fire Watch: When the operation is complete, stay at location for 1 hour. After one hour, notify the permit issuer or Supervisor of satisfactory completion of operation.

Permit Issuer: Initially inspect work area and complete precaution checklist. Keep copy and issue original to person doing work. **Ensure that a final inspection is conducted 4 hours after hot work is completed.**
Company: _____ Date: _____

Building: _____ Department: _____ Floor: _____

Work to be done: _____

Work to be done by Whom: _____

The location where this work is to be done has been examined, necessary precautions have been taken and permission is granted for this work. Permit expires (No more than one shift):

Signed: _____ Title: _____
(Permit issuer /person responsible for authorizing hot work)

REF : NATIONAL FIRE CODE OF CANADA (SECTION 5.2)

General

___ Sprinkler protection in service

___ Communication methods for help or emergency.

___ Cutting and welding equipment in good repair

___ If work conducted on enclosed equipment, confined space Entry permit issued

___ Area smoke detection isolated where appropriate

___ Inspect contractors' equipment to certify that it is in proper working order and in a fire safe condition prior to issuance of permit

Within 15 m of work area

___ Floors swept clean of all combustibles
___ Combustible floors wet down or covered with damp sand, metal or other non-combustible shields
___ All ordinary combustibles and flammable/combustible liquids removed
___ Covers suspended beneath elevated work to collect Sparks
___ All hazardous operations discontinued
___ Appropriate fire extinguishers or hose stream at the ready

Work on Walls or Ceilings

___ Construction non-combustible and without combustible Covering

___ Exposed combustible ceiling and wall insulation covered or Removed

___ Combustibles moved away from opposite side of wall

INITIAL INSPECTION
The work area and adjacent areas to which sparks and heat may have spread (including floors above and below and on opposite sides of walls) have been **continuously** inspected for 1 hour after the work was completed and were found to be fire safe.

Signed: _____ Title: _____
(Hot Work Supervisor or fire watcher)

Time Inspection completed: _____

FINAL INSPECTION
The work area and adjacent areas to which sparks and heat may have spread (including floors above and below and on opposite sides of walls) have been inspected 3 hours after the initial inspection was completed and were found to be fire safe.
Note: Depending on location and circumstances of the work, more frequent checks may be appropriate

Signed: Title:

(Hot Work Supervisor or fire watcher)
Time checked: _____ _____ _____

** Trained fire watchers equipped with appropriate PPE shall be required by the individual responsible for authorizing hot work wherever cutting or welding is performed in locations other than a properly equipped welding shop, or where:

a) combustible material in building construction or contents is closer than 15m to operation
b) Appreciable combustibles are more than 15m away but are easily ignited by sparks.
c) Wall or floor openings within 15 m radius expose combustible material in adjacent areas, including concealed spaces in walls and floors
d) Combustible materials are adjacent to the opposite side of metal partitions, walls, ceilings or roofs and are likely to be ignited by conduction or radiation.

Work on enclosed equipment (tanks, containers, ducts, dust collectors)
___ Equipment cleaned of all combustibles
___ Containers purged of flammable vapors

Fire Watch
___ Trained in use of equipment and in raising/sounding the alarm
___ Area smoke detection re-instated where appropriate after work completed

Final Check- ensure HOT WORK PERMIT is completed
Checklist completed:
Signed:

(Permit issuer) _____

All emergency systems DISABLED during the work have been reactivated. Time:

SNC•LAVALIN

PERMIT TO WORK FORM

FRM-HS-OM-PTW-01a

A. FACILITY AND PROJECT WORK REQUIREMENTS

N.A.	Work requested on this permit meets the requirements stipulated in Start Up Meeting for this project.
N.A.	Contractor Environmental Health and Safety submittals have been approved for this project.
N.A.	Material Safety Data Sheets have been provided for materials used to complete the work.
N.A.	Contractor has reviewed Asbestos Management Plan and is aware of location of asbestos containing materials in the work area.

B. CONTRACTOR AND WORK INFORMATION

START							
END							

FACILITY MANAGER

C. WORKER SAFETY AND SITE PROTECTION REQUIREMENTS

ELECTRICAL SWITCHES IN OFF POSITION & TESTED FOR ZERO ENERGY			FIRE EXTINGUISHER	HOT WORK PERMIT
PIPING DISCONNECTED AND BLANKED OFF			SPRINKLER VALVES ISOLATED	FIRE WATCH
VALVE/SWITCH LOCKED AND TAGGED		ARC FLASH CONTROLS	FIRE ZONE DISABLED	
FALL ARREST	FOOT PROTECTION	HEAD PROTECTION	ASBESTOS ABATEMENT PROCEDURES	
EYE PROTECTION	RESPIRATORY PROTECTION	FACESHIELD	OTHER DESIGNATED SUBSTANCE ABATEMENT	
			MOULD ABATEMENT REGULATED PROCEDURES	
CONSTRUCTION SIGNAGE	BARRIERS - HOARDING/FENCING		HAZARDOUS WASTE REGULATED REMOVAL PROCEDURES	
NOTICE OF PROJECT	CAUTION/DANGER TAPE			
DUST CONTROL & DIRT TRACKING PREVENTION			ATMOSPHERIC HAZARD CONTROLS	ENTRY PERMIT
			RESCUE PROCEDURE	CONFINED SPACE PROGRAM
INCIDENT NOTIFICATION/REPORTING		SITE SECURITY		

D. CONTRACTOR AGREEMENT

I HAVE REVIEWED THE PERMIT AND UNDERSTAND THE NATURE AND EXTENT OF THE RULES, REGULATIONS AND PRECAUTIONS TO BE FOLLOWED IN PERFORMING THE WORK.

CONTRACTOR SIGNATURE: _____

PRINT NAME: _____

Brookfield Johnson Controls

GUIDE D'ORIENTATION À L'IMMEUBLE

PARTIE 2/2

POLITIQUES DE SANTÉ, SÉCURITÉ ET ENVIRONNEMENT

ENTREPRENEURS

HS-105-00(Fr)

Rév. 3 – 12 janvier 2015

Brookfield Johnson Controls

Table of Contents

Brookfield Global Integrated Solutions
HEALTH AND SAFETY POLICY

The safety and well-being of our team members is inherent in the Brookfield Global Integrated Solutions' (Brookfield GIS) operating philosophy. It is a value embedded in our corporate culture, and a practice reflected in our health and safety program and our business processes. We are the industry leader in workplace management solutions, and our focus on the welfare of our team members has helped to position us there.

Brookfield GIS is committed to all of its employees and to complying with all applicable health and safety legislation, requirements, codes of practice, internal standards and guidelines subscribed to by ourselves and our clients.

Through audits, team member feedback, accountability and periodic reviews, we are continually striving to improve upon our safety performance. We establish aggressive goals and targets, while providing training and resources to move our organization towards a zero incident rate.

Team members are integral in implementing and maintaining a safe and healthy workplace for ourselves, our contractors, our clients and the public who enter our workplace. We ensure our employees are aware of and understand their rights and responsibilities with respect to health and safety. To this end, we ensure that this policy is communicated to, and understood by, the employees of Brookfield GIS and our sub-contractors who are involved in the delivery of work on behalf of our clients. Team members provide input and participate in all health and safety related programs and initiatives to ensure that safety and well-being is the blueprint of all our activities. Brookfield GIS understands the importance of safety and well-being at both a personal and organizational level, and Brookfield G I S fosters this culture through our ongoing initiatives. Together, we will ensure that every day is a safe one.

SAFETY FIRST, it is the way we do business.

Date: March 30, 2015

Gordon I. Hicks
President

Brookfield Global Integrated Solutions
ENVIRONMENTAL POLICY

Environmental stewardship is a cornerstone of the Brookfield Global Integrated Solutions' operating philosophy. It is a value embedded in our corporate culture and a practice reflected in our national environmental management system and our business processes. Not only do we manage environmental impacts resulting from self-performed and sub-contractor delivered services, we also manage our clients' impact on the environment in thousands of buildings across Canada. We are the industry leader in workplace management solutions, and our focus on environmental stewardship has helped to position us there.

The communication of this policy is paramount to its understanding and effectiveness. Therefore we have taken measures to ensure that it is communicated to, and understood by, the employees of Brookfield GIS and our sub-contractors who are involved in the delivery of work on behalf of our clients.

We are committed to complying with all applicable environmental legislation, requirements, codes of practice, internal standards and guidelines subscribed to by ourselves and/or our clients. Brookfield GIS and its employees are also committed to conducting our operations in a manner that minimizes any environmental impacts.

Brookfield GIS is always aiming for continual improvement in our environmental practices. We set specific performance goals and targets, and provide our team with the resources to achieve these objectives. Our progress related to meeting these targets is reviewed and evaluated regularly, while our overall environmental program, policy and management system are reviewed annually.

Our employees understand the importance of environmental and social responsibility at a personal and organizational level, and we foster this culture through ongoing training and education.

Together, we can make a difference.

Date: March 30, 2015

Disclaimer - Purpose - Policies

DISCLAIMER

The intent of Brookfield GIS' Health, Safety & Environment Policy Document for Contractors is to provide a written overview of Brookfield GIS' minimum policies and procedures with respect to Health, Safety and Environment (HS&E). This handbook does not address all HS&E issues which may arise during completion of work. Nor is this document intended to address or replace the Contractor's duties and requirements with respect to regulatory compliance and best practices, and in conducting work in a manner that creates a safe and healthy environment for its own employees, Brookfield GIS, building occupants and the public. It is the responsibility of the Contractor to operate in compliance with all applicable legislation and regulations that may pertain to its activities. Compliance with this document does not relieve the Contractor from any liability that may result from the Contractor's actions or from failure to act in accordance with applicable legislation. Where applicable, Brookfield GIS may provide to the Contractor additional HS&E policies and procedures, relating to specific site or job requirements, which the Contractor shall comply with. This document may be modified at any time at Brookfield GIS' discretion.

PURPOSE

The purpose of this document is to assist contractors in understanding Brookfield GIS' minimum HS&E requirements while undertaking work at a Brookfield GIS controlled space. This document is a general overview of Brookfield GIS' protocols and should be used in conjunction with the Contractor's own environment, health and safety policies, procedures and programs. Contractors are responsible for controlling workplace activities and for maintaining and promoting a safe and healthy work environment. It is Brookfield GIS' expectation that the information in this document is communicated to all the Contractor's employees and any of its subcontractors. As a large percentage of contract work is completed at non-Brookfield GIS supervised locations, we expect Contractors to be conscientious of their HS&E practices and their reflection on Brookfield GIS. In the event that the Contractor is unable to meet the requirements outlined in this document, the Contractor is to notify Brookfield GIS immediately. Assistance in meeting the requirements will be reviewed on a case by case basis.

POLICIES

Brookfield GIS is dedicated to becoming "best in class" with respect to HS&E. Our culture is one in which health, safety and environment are more than words in our value statement; they are integrated into our daily activities and are part of our culture.
Our Health and Safety and Environment Policies are located above. These policies are reviewed annually. Brookfield GIS maintains both health and safety and environmental management systems and is registered to ISO 14001.
Contractors will:

- Be aware of Brookfield GIS' HS&E policies
- Review with their designated Brookfield GIS contact any applicable objectives, targets and environmental programs
- Comply with Brookfield GIS' HS&E policies
- Upon request provide evidence of competency and/or compliance
- Understand the HS&E impacts related to contractor's activities and be aware of the appropriate operational controls to address any areas of risk.

Auditing – General Requirements

AUDITING

Brookfield GIS reserves the right to audit the Contractor for its adherence to the HS&E requirements of the work being performed. An audit may include workplace inspections, visual observations, interviews and document review, including training records, certifications and HS&E related statistics. Action plans, including person responsible and time line, are to be provided to the Brookfield GIS contact for any observations noted.

GENERAL REQUIREMENTS

Health and Safety Program

All contractors and sub-contractors must have a health and safety program in place. Upon request, contractors must submit to Brookfield GIS evidence of a comprehensive health and safety program and other specialized plans may be required.

Subcontractors

All Contractors are required to review this manual and communicate it with their employees. Also the Contractor must review the manual with all sub-contractors and are responsible for ensuring that all Brookfield GIS policies and procedures are complied with. Brookfield GIS reserves the right to request Contractors audit their sub-contractors and forward action plans for any non-conformances.

Facility Access and Security

Contractors are to review facility access and security requirements with their designated Brookfield GIS contact. The Contractor is to immediately inform their Brookfield GIS contact of any security or facility access issues.

Working Alone at Remote Sites

Contractors who are working alone at remote sites must have a Work Alone Policy in place.

General Behaviour

All contractors are to conduct themselves in a professional manner. Behaviour which violates Brookfield GIS' policies or has the potential to endanger the safety and well-being of any of the building occupants is grounds for removal from the site. Inappropriate behaviour includes but is not limited to:

- Use, possession, distribution, offering, sale or being under the influence of alcohol, illicit drugs, illicit drug paraphernalia or non-prescribed drugs for which a prescription is legally required in Canada, while on company business or premises.
- Disorderly or violent conduct
- Theft or intentional damage to property
- Entering restricted areas
- Harassment
- Criminal activities

Training, Licenses and Certifications

Contractors must have all appropriate professional training, licenses and certifications required for the work being performed. Training records and copies of licenses, certifications are to be made available upon request. Contractors are to have their own

HS&E program and be able to confirm in writing that the Contractor's employees have received and understood all health, safety and environment training appropriate to the scale of work being undertaken.

Hazard Identification / Stop Work & Reporting

It is the Contractor's responsibility to be aware of all dangers or hazards associated with the work performed and the work environment and to remove and / or control the hazard or danger prior to commencement of work. To assist the contractor in this regard, Brookfield GIS is in the process of installing hazard stations at managed properties. Should Contractors have questions regarding **site hazards** they can contact our 24 hour support line at **1-877-445-0611.** All potential or existing dangers or hazards observed by the Contractor shall be reported to the designated Brookfield GIS contact. Any danger or hazard observed beyond the control of the Contractor is to be reported to the designated Brookfield GIS contact immediately and the Contractor is to avoid the hazard or danger until it is eliminated or controlled. The Contractor may not conduct any work that may result in a danger or hazard to people, environment or property. Where an existing danger or hazard is present, or where the Contractor reasonably believes that an imminent danger or hazard is present, the Contractor has the right to stop work so that the danger or hazard is eliminated or safe work practices are incorporated. For the purposes of this policy, a danger or hazard may include, but is not limited to:

- A situation for which the individual is not properly trained or experienced.
- A situation for which the individual is not equipped (i.e. safety or personal protective equipment).
- A situation where the individual believes that proper procedures and work practices are not being followed.
- A hazard that is not typical to the individual's work activities or job.
- A worker unfit for work due to the influence of alcohol or illegal or mind-altering substances.
- A danger that would normally stop work in the affected area.
- A situation where the environment may be adversely affected and regulatory authorities would be involved;
- A situation which may result in equipment / property damage.

Any stop work situations are to be reported immediately to the Brookfield GIS contact. The designated Brookfield GIS contact is to be advised of the danger or hazard, the corrective action and when the situation is resolved.

First Aid / Medical Emergencies

All Contractors are responsible to ensure that first aid, emergency medical services and transportation are provided to its employees. Contractors are also required to provide trained first aid personnel, supplies, and equipment as applicable. It is possible that professional medical aid may be available at some locations. Please review potential assistance with your Brookfield GIS contact. Any access to professional aid does not release the Contractor of ensuring emergency assistance is provided to its employees.

Accident / Incident Investigation and Reporting

Contractors are required to report all accidents / incidents, regardless of severity, to their Brookfield GIS contact on the Brookfield GIS Incident Injury Report Form HS 240 01. All incidents resulting in serious injury or illness, damage to property or equipment or environmental contamination are to be reported to Brookfield GIS immediately. All

near misses that may have resulted in serious injury or illness, damage to property or equipment or environmental contamination are also to be reported immediately. Contractors must also report immediately to Brookfield GIS any unplanned or uncontrolled fire, explosion or flood, as well as any collapse or failure of a building or structure. Where the incident resulted in a recordable injury (time loss and / or medical aid sought) or where a regulatory authority must be contacted, Brookfield GIS is to be notified concurrently and a copy of the investigation report is to be forwarded upon completion. It is the Contractor's responsibility to contact the appropriate regulatory authority when it is required due to the nature of the incident. Where reporting of an incident to a regulatory authority is required, the Contractor shall comply in accordance with applicable health and safety legislation in the course of any subsequent investigation or inspection and, where required, the incident scene shall not be disturbed or altered until the site is released by the appropriate regulatory authority.

Emergency Evacuation

In order to ensure personal safety, Contractors are required to be aware of the emergency evacuation procedures for the location of work. Review this information with your Brookfield GIS contact.

Housekeeping

The Contractor is to maintain a clean and orderly work area. Contractors are to clean and remove all non-hazardous solid waste and recyclables at regular intervals throughout the shift and at the end of each shift. Required waste containers are to be provided by the Contractor. Clear access is to be maintained to and in contractor working areas. Access to electrical panels, fire extinguishers, safety showers and eyewash stations, fire hydrants and points of egress are to be kept free and clear of all obstructions unless written approval is obtained from Brookfield GIS.

Work Area Protection and Hazard Notification

All work areas must be appropriately barricaded and signage installed where required. Contractors are responsible for providing signs, cones, plastic sheets, guardrails and other materials to create an effective barricade to isolate the work environment from the building occupants and to prevent unauthorized access. Any requirements to block means of egress, fire, life or other safety equipment must first be approved by the Brookfield GIS contact. Signs and barricades may not be removed until the work is completed or all hazards are eliminated. Where the work being conducted may create a temporary hazard to the building occupants (e.g., wet floor) the Contractor shall ensure the appropriate signage and / or barriers are posted. The signs / barriers may not be removed until the hazard is eliminated. Where work being conducted could affect the health, well-being or comfort of the building occupants (e.g., paint fumes) the Contractor shall inform the building occupants through the Brookfield GIS contract prior to the start of work.

Personal Protective Equipment (PPE)

Contractors are responsible for conducting job assessments to determine the appropriate PPE necessary for the work being conducted and are responsible for its provision. Contractors must also be able to demonstrate that the employees have been

trained in and conducted proper inspection, maintenance, and safe use of that equipment.

Tools and Equipment

Contractors are responsible to provide their own tools, equipment and vehicles and are required to conduct the work in a safe manner in accordance with all regulatory requirements. Contractors are responsible for the safe operation of any equipment brought on location and must be able to demonstrate that all operators of said tools and equipment are trained and qualified to do so. Contractors are also responsible for the inherent integrity of the tools and equipment itself and must be able to demonstrate that the equipment has been properly maintained and is safe for use.

Brookfield GIS Owned Tools and Equipment

Unless written authorization is obtained, Contractors may not use Brookfield GIS owned or leased tools or equipment. In most cases, Brookfield GIS will not loan tools or equipment due to liability concerns. Refer to General Manager or Enterprise Risk Manager for additional guidance. In cases of written authorization, Contractors will provide copies of any training records / certifications required to operate the tools and / or equipment. The contactor will also sign the Brookfield GIS Loan of Equipment waiver.

Power Tools

All power tools are to be double insulated or equipped with grounded power cords. Ground Fault Interrupters (GFI) or other similar devices must be used in wet or damp locations. The Contractor's employees must be properly trained in their use and the tools are to be maintained in a safe operating condition.

Explosive Actuated Tools

Any Contractors using explosive actuated tools must be competent, trained and certified as required. The Contractor is to ensure that all explosive actuated fastening tools are properly inspected before and after each use and that no alterations be carried out to any protective guards. The contractor shall ensure that all requirements regarding safe use, storage and removal process is carried out in accordance with the appropriate legislation. Equipment is to be properly maintained and all Contractors are to be trained in its use and safe operation.

Electrical Safety

It is the Contractor's responsibility to have a safe electrical program as required. Contractors working on or near live equipment must be qualified to do so and receive required authorization. Contractors must not work on low or high voltage unless specifically retained to do so. Energized parts, circuits, panels and other equipment must be properly guarded. Unguarded energized parts must not be left unattended. All electrical devices must be properly grounded or double insulated.

Ladders

All Contractor ladders must be labeled with the Contractor's name. All ladders are to be maintained in good condition at all times and inspected prior to use. Employees using

ladders must do so in a safe and responsible manner. Any defective ladders are to be tagged as such and removed from site.

Working at Heights

It is the Contractor's responsibility to select the appropriate fall protection measures for the work to be performed. When working at heights, the area below is to be cordoned off as the work area protection requires. Contractors must be able to demonstrate that all equipment has current inspection certificate and is maintained as per regulatory requirements and that all personnel have current and appropriate training.

Scaffolding

All scaffolding is to be erected, maintained and inspected in accordance with all applicable regulations, codes and engineering practices. The Contractor is to ensure competent supervision of any modification process and have written approvals of such modifications. Precautions must also be taken to ensure that each scaffold does not exceed structural or design limits set out by applicable provincial legislation.

The Contactor must also provide all scaffolds and safety equipment required for the entire project. Copies of the inspection reports are to be available upon request.

Industrial Powered Vehicles, including Lifting Devices

All Contractors operating industrial powered vehicles must be trained and licensed or certified in the operation of the particular equipment to be used. If the Contractor has received written authorization to use Brookfield GIS equipment, the Loan of Equipment waiver must be signed prior to use and all Brookfield GIS process and procedures with respect to the equipment must be followed.

Motor Vehicles

All Contractors operating motor vehicles are to have and maintain a valid driver's license and a responsible driving record. Contractors must exercise due caution when driving on customer sites.

Material Handling

All Contractors involved in manual material handling should be aware of and trained in proper material handling procedures and are to use material handling equipment where appropriate. Equipment is to be properly maintained and all Contractors are to be trained in its use and safe operation.

Noise

Contractors must work in a manner that does not create a disruption to the normal course of business. Any activity that produces noise that interferes with the business operation must be completed during off-hours. Contractors shall ensure that their employees have proper and adequate noise and hearing protection.

Lighting

Contractors shall ensure that proper and adequate workplace lighting is provided in accordance with applicable legislative and regulatory requirements.

Working in Cold and Hot Environments

Contractors are to have policies and procedures in place to ensure their employees are appropriately protected when working in cold and hot environments.

Asbestos Containing Material (ACM)

It is possible that the Contractor may be working in an area where ACM is located. Please review potential ACM locations with your Brookfield GIS contact prior to commencing work. The presence of various friable and or non-friable asbestos containing material (ACM) has been identified or is presumed to be present at all Brookfield GIS managed facilities constructed prior to 1992. The contractor / service provider shall review prior to their work, the building asbestos survey or asbestos notification letter (attached in appendix A), either or shall be placed in the site hazard station. Buildings without a hazard station, asbestos survey or notification letter are to be regarded as buildings that may contain ACM. Contractors may not intentionally disturb ACM unless specifically retained to do so, in which case Brookfield GIS' Asbestos Management Program and all Client requirements must be followed. If a Contractor unintentionally disturbs suspected or known ACM, stop work and immediately inform your Brookfield GIS contact.

Mould

Contractors shall notify the designated Brookfield GIS contact if any mould or mildew is observed in the work location. The Contractor must not disturb an area suspected to be contaminated with mould.

Infection Control

All Health Care Centers where the Contractor will be performing construction / maintenance will adhere to the Infection Control and Dust Containment requirements as per Canadian Standards Association CSA Z317.13-12 documentation titled Infection Control During Construction, Renovation or Maintenance of Health Care Facilities (2012).

Halocarbon Management

Contractors that work on systems that contain halocarbons are required to manage those systems in accordance with Brookfield GIS policy. Brookfield GIS policy dictates that Federal legislation shall be applied in every circumstance. Contractors are required to report any halocarbon release regardless of the quantity to Brookfield GIS immediately. All contractors shall adhere to their legislative requirements of having ODS or ODP qualified personnel to maintain the systems. All leak test tags and onsite report logs shall be updated and or provided by the contractor. Only Brookfield GIS-approved leak-test tags will be utilized.

Site Specific Hazards / Requirements

Any site specific hazards or requirements not covered by this manual should be identified, reviewed, assessed and controlled with the Brookfield GIS contact immediately.

REQUIREMENTS BROOKFIELD GIS NOTIFICATION / PERMITS

Fire and Life Safety

Contractors are to provide their own fire protection equipment as required, including but not limited to fire extinguishers. Use and storage of flammable and combustible materials must be conducted in accordance with all codes and regulation and their use and storage must be approved by the Brookfield GIS contact prior to bringing the material on-site. Contractors may not conduct any work that will affect the building's fire life safety systems unless specifically retained to do so and the Brookfield GIS contact is aware of and approved the timing of the work prior to its commencement.

Hazardous Materials Management, including Compressed Gases

Contractors are required to obtain permission prior to bringing hazardous materials to a work location. Quantities brought and maintained at location of work should be minimized and appropriate to the nature and scope of work. Contractors must maintain an updated inventory of hazardous materials on-site; current Material Safety Data Sheet are to be located in proximity to the hazardous materials storage and areas of use and must be accessible to Brookfield GIS and emergency response personnel. It is the Contractor's responsibility that all hazardous materials are properly handled and stored in accordance with all regulatory and code requirements and all WHMIS labeling requirements are met. It is also the Contractor's responsibility to have an appropriate spill response plan and required equipment in place. The Contractor must be able to demonstrate that its employees have received WHMIS training and are knowledgeable in spill response appropriate to the material at the work location. Any releases or spills that results in a requirement to contact a regulatory authority must be investigated and reported as per the Accident / Incident Investigation and Reporting section.
All Contractors must be able to demonstrate that its employees involved in the transporting of hazardous materials have Transportation of Dangerous Goods training appropriate to their role. All hazardous waste generated by the Contractor is to be removed through Brookfield GIS unless written authorization is received.

Lockout / Tag Out

It is the Contractor's responsibility to have a hazardous energy control program in place (Lockout/Tag Out) if they are involved in maintaining and / or repairing equipment. This program is to be available to Brookfield GIS for review upon request. Prior to initiating a lockout / tag out, the Contractor must inform the Brookfield GIS contact of the location and estimated duration of the equipment lockout / tag out and will then conduct a review of all energy sources and the equipment-specific written procedure.

Welding / Cutting (Hot Work)

It is the Contractor's responsibility to have a hot work program. The Contractor must inform their Brookfield GIS contact and have a Hot Work permit issued prior to the start of any hot work. If hot work is being conducted within a building, it must be planned (through scheduling, engineering controls etc.), to minimize building occupant's exposure to fumes and other hazards. Precautions must also be undertaken to prevent interference with fire life safety systems. A work and post-work spotter is required where

there is a risk of fire or where the fire life safety systems are impaired or off line. The Contractor is responsible for providing all fire protection equipment and personnel.

Confined Space

All Contractors entering a permit restricted confined space must follow Brookfield GIS' confined space business process and permit requirements. A Contractor may only enter a permit restricted confined space upon review of the specific confined space entry procedure and issuance of a Brookfield GIS Confined Space Entry and other applicable permits. The Brookfield GIS contact must be informed prior to an entry. It is the Contractor's responsibility to provide their own safety equipment including PPE, monitoring and rescue equipment.

Crane, Hoist, and Other Lift Equipment

Contractors will obtain approval from their Brookfield GIS contact prior to bringing on-site and using cranes, hoists, and other lifting equipment. All operators must be trained and certified in the equipment being used. The equipment is to be maintained as per the manufacturer's recommended maintenance and safety requirements and an up-to-date inspection report certifying the equipment is to be available upon request. A copy of the crane hand signals that will be used are to be posted. The Contractor must ensure that loads never exceed the set limits and that suspended loads are never left unattended. Loads shall never be raised overtop or be suspended above workers.

Worksite Inspections

Brookfield GIS requires all contractor worksites to be inspected for hazards, when found corrected or isolated as per the applicable provincial / federal legislated regulations. Brookfield GIS requires that all worksites are to be inspected regardless of size or scope of work. Required frequencies are at the start of a project, when site conditions change, after an accident or at a minimum once per month thereafter. All inspection reports shall be without delay forwarded to the contractor's Brookfield GIS contact person. In cases where the contractor does not have an Inspection report they can use the Brookfield GIS (HS 286 01 Workplace Safety Checklist Audit Form) which can be obtained from the contractor's Brookfield GIS contact person.

Work Permit and Safety Plans – Reference Appendix B

References for RP1 Contract ONLY:
HS 287 00 RP1 OHS Building Plan
HS 288 00 RP1 Project-specific OHS Plan
HS 289 00 PSPC Control of the Workplace
HS 290 00 RP1 Re-assigning a Constructor

APPENDIX A

CONTRACTOR / SERVICE PROVIDER ASBESTOS NOTIFICATION

Brookfield GIS Facility Management Services, Workplace Solutions Inc. RealSuite Inc.
Letter of Notification:

WORKING WITH ASBESTOS CAN BE EXTREMLY DANGEROUS INHALING ASBESTOS FIBRES CAN CAUSE VARIOUS TYPES OF LUNG DISEASE, MESOTHELIOMIA OR CANCER.

Asbestos may be present in the following materials as listed: Cement Pipes, Cement Wallboard, Cement Siding, Asphalt Floor Tile, Vinyl Floor Tile, Vinyl Sheet Flooring, Flooring Backing, Constructions Mastics, Acoustical Plaster, Decorative Plaster, Textured Paints/Coatings, Ceiling Tiles and Lay-in Panels, Spray-Applied Insulation, Blown-in insulation, Fireproofing Materials, Taping compounds (thermal), Packing Materials, High Temperature Gaskets, Laboratory Hoods/Table Tops, Laboratory Gloves, Fire Blankets, Fire Curtains, Elevator Equipment Panels, Elevator Brake Shoes, HVAC Duct Insulation, Boiler Insulation, Breaching Insulation, Flexible Fabric Ductwork, Cooling Towers, Pipe Insulation, Heating and Electrical Ducts, Electrical Panel Partitions, Electrical Cloth, Electric Wiring Insulation, Chalkboards, Roofing Shingles, Roofing Felt, Base Flashing, Thermal Paper Products, Fire Doors, Caulking/Putties, Adhesives, Wallboard, Joint Compounds and Spackling, Vinyl Wall Coverings.

The presence of various friable and or non-friable asbestos containing material (ACM) have been identified or are presumed to be present at all Brookfield GIS managed facilities constructed prior to 1992. The contractor / service provider shall review prior to their work, the building asbestos survey or asbestos notification letter, either or shall be placed in the buildings log book/hazard document library. Buildings without a log book, asbestos survey or notification letter are to be regarded as buildings that may contain ACM. Where applicable Brookfield GIS will review with the contractor / service provider personnel the locations of known ACMs as noted on the asbestos survey. The Brookfield GIS Asbestos Management Program applies to all maintenance, repair and renovation work that may disturb asbestos materials. The disturbance of asbestos building materials may only be undertaken by qualified contractors who have received training in asbestos-related precautions and procedures (as per the provincial / federal Occupational Health Safety Act and the governing regulations). As a condition of your contract to provide services and materials to Brookfield GIS, the contractor / service provider shall not disturb asbestos-containing materials without prior notification to Brookfield GIS. The contractor / service provider and its workers, while at any location will follow all procedures specified by the Brookfield GIS Asbestos Management Program.

Thank you for your ongoing support.

“SAFETY FIRST, IT’S THE WAY WE DO BUSINESS”

Appendix B

Brookfield GIS Required Project Specific Safety Documents

- **Signed and Initialed BROOKFIELD GIS Contractor Handbook**
    - This document must be read and initialed and signed by the contractor's representative and provided to the PM prior to work beginning.
- **Job Hazard Assessment**
    - A job Hazard Assessment must be done prior to work commencing on a site and depending on the project Job Hazard Assessments must be completed when worksite conditions change or a new Hazard is introduced into the worksite.

The contractor is to have, at minimum, the above documentation provided to the Project Manager at the start of a project. The following documentation must be provided to the PM as soon as possible during the project if applicable.

- **Pre Project Safety Inspection**
    - Where the project involves alterations to the structure of the building a Pre Projection Safety Inspection is to be completed to identify any risks to the tenants of the facility as well as the workers completing the task.
- **Project Safety Plan**
    - If applicable a Project Safety Plan should be completed prior to a project beginning and to be available and reviewed by all personnel on site prior to commencing work.
- **Site Safety Orientations**
    - Where one or more individuals are working on a jobsite a Site Safety Orientation must be done in order for the worker(s) to familiarize themselves with the environment they will be working in. There may be Site Specific Rules that will only apply to that location and all workers must be made aware of these rules.
- **Emergency Response Plan**
    - In case of an emergency there must be a plan in place to respond to the situation. This must be provided to the PM in charge of the project.
- **Toolbox/Safety Meetings**
    - A Toolbox or Safety Meeting must happen at the beginning of a project and should take place periodically throughout the project as well. The minutes of these meetings must be provided to the PM.
- **Safe Work Permits (Lockout/Tag out, Hot Work)**
    - A work permit system must be in place if specified in advance
- **Incident Reports - Near Misses**
    - Any incident or near miss that occurs on a BROOKFIELD GIS Project is to be immediately reported to the PM and appropriate documentation including any investigation material provided within 72hours unless client requirements dictate otherwise.

CONTRACTOR ACKNOWLEDGEMENT

I _____, the Contractor (or the Contractor Representative), by signing this document acknowledge that I have read and understand the rules and policies outlined in the previous pages. I also acknowledge receipt and acceptance of the Brookfield GIS "**Contractor Health, Safety and Environmental Policy Handbook**".

_____
Company Name (Please print)

_____
Signature (Contractor / Contractor Representative)

_____
Name (Please print)

_____
Title / Position

_____
Date

ANNEX B

Confined space entry permit

Confined space entry log

Confined space hazard assessment

Public Works and Government Services Canada | Travaux publics et Services gouvernementaux Canada

Valid for eight (8) hours only.
Ce permis est valable pendant huit (8) heures seulement.

CONFINED SPACE ENTRY PERMIT
PERMIS D'ACCÈS AUX ESPACES CLOS

Permit no.
Nº du permis

Issue date and time Date et heure d'émission	__:__	Expiry date and time Date et heure d'expiration	__:__

☐ Contractor
Entrepreneur

☐ PWGSC Personnel
Personnel de TPSGC

Location - Lieu	Dept. - Min.	Confined space no. Nº de l'espace clos	Confined space class Catégorie d'espace clos

Description of work to be completed - Description du travail à effectuer

Yes Oui	N/A S.O.	HAZARDS OF THE CONFINED SPACE RISQUES PRÉSENTÉS PAR L'ESPACE CLOS
☐	☐	Oxygen Hazard: < 19.5% or > 23.0% Manque d'oxygène : < 19.5% ou > 23.0%
☐	☐	Flammables: > 10% of LEL - **Specify** Produits inflammables : 10% de la limite explosive inférieure - **Précisez**
☐	☐	Toxic Chemicals: > TLV-TWA - **Specify** Produits chimiques toxiques : > valeur TLV-TWA - **Précisez**
☐	☐	Mechanical Hazards: - **Specify** Risques mécaniques : - **Précisez**
☐	☐	Electrical Hazards: - **Specify** Chocs électriques : - **Précisez**
☐	☐	Physical Hazards: noise; vibration, light, lazer; x-ray; heat; cold; surfaces; engulfment - **Specify** Risques physiques : bruits; vibrations; lumière; laser; rayons X; chaleur; froid; surfaces; engouffrement - **Précisez**
☐	☐	Others: - **Specify** Autres : - **Précisez**

Equipment required for CS Entry - Équipement requis pour entrer dans l'espace clos

☐ Respiratory/Air purifying protection Dispositif de protection des voies respiratoires et de purification de l'air	☐ Lifelines and Safety harnesses Câble de sauvetage et harnais de sécurité	☐ Lockouts Mécanismes de verrouillage	☐ Hearing protection Protecteurs auditifs
☐ _____	☐ Tripod Trépied	☐ Lighting units Dispositifs d'éclairage	☐ Head protection Casque protecteur
☐ _____	☐ Personal lift Dispositif de levage personnel	☐ Ventilation Équipement d'aération	☐ Hand protection Gants
☐ _____	☐ Tool box Coffre à outils	☐ Secure area (post and flag) Zone protégée (affichage et signalisation)	☐ Eye protection Protecteurs oculaires
☐ _____	☐ Rescue equipment Équipement de secours	☐ Fire extinguishers Extincteurs d'incendie	☐ Face protection Visière
☐ _____	☐ Ground force circuit interrupters Disjoncteur de fuite à la terre et interrupteur de circuit de fuite	☐ _____	

Person in charge - Personne responsable — Signature

Safety Watcher - Gardien — Signature

Entrants - Personnes qui entrent dans l'espace clos

_____ _____

Local emergency/medical response teams - Équipes locales d'intervention médicale et d'urgence — Telephone nos. - Nºs de ( ) -

Authorization - Autorisation

The above information is complete and accurate. Information pertaining to hazards and equipment requirements has been extracted from the latest Hazard Assessment, dated _____

Tous les renseignements fournis ci-dessus sont complets et exacts. L'information relative aux risques et à l'équipement requis est fondée sur la dernière évaluation des risques en date du _____

Manager in Charge of Worksite or Supervisor
Gestionnaire responsable du lieu de travail ou le superviseur

Signature

Public Works and Government Services Canada | Travaux publics et Services gouvernementaux Canada

CONFINED SPACE ENTRY PERMIT
PERMIS D'ACCÈS AUX ESPACES CLOS

Valid for eight (8) hours only.
Ce permis est valable pendant huit (8) heures seulement.

Permit no.
Nº du permis

Issue date Date	Time - Heure __:__	Expiry date Date	Time - Heure __:__
Entry date Date d'entrée ▶		Time Heure ▶	
Anticipated exit - Sortie de prévue Date ▶		Time Heure ▶	

Location - Lieu	Dept. - Min.	Confined space no. Nº de l'espace clos	Confined space class Catégorie d'espace clos
Description of work to be completed - Description du travail à effectuer			

Yes Oui	N/A S.O.	HAZARDS OF THE CONFINED SPACE RISQUES PRÉSENTÉS PAR L'ESPACE CLOS
☐	☐	Oxygen Hazard: < 19.5% or > 23.0% Manque d'oxygène : < 19.5% ou > 23.0%
☐	☐	Flammables: > 10% of LEL - **Specify** Produits inflammables : 10% de la limite explosive inférieure - **Précisez**
☐	☐	Toxic Chemicals: > TLV-TWA - **Specify** Produits chimiques toxiques : > valeur TLV-TWA - **Précisez**
☐	☐	Mechanical Hazards: - **Specify** Risques mécaniques : - **Précisez**
☐	☐	Electrical Hazards: - **Specify** Chocs électriques : - **Précisez**
☐	☐	Physical Hazards: noise; vibration, light, lazer; x-ray; heat; cold; surfaces; engulfment - **Specify** Risques physiques : bruits; vibrations; lumière; laser; rayons X; chaleur; froid; surfaces; engouffrement - **Précisez**
☐	☐	Others: - **Specify** Autres : - **Précisez**

Equipment required for CS Entry - Équipement requis pour entrer dans l'espace clos

☐ Respiratory/Air purifying protection Dispositif de protection des voies respiratoires et de purification de l'air	☐ Lifelines and Safety harnesses Câble de sauvetage et harnais de sécurité	☐ Lockouts Mécanismes de verrouillage	☐ Hearing protection Protecteurs auditifs
☐ _____	☐ Tripod Trépied	☐ Lighting units Dispositifs d'éclairage	☐ Head protection Casque protecteur
☐ _____	☐ Personal lift Dispositif de levage personnel	☐ Ventilation Équipement d'aération	☐ Hand protection Gants
☐ _____	☐ Tool box Coffre à outils	☐ Secure area (post and flag) Zone protégée (affichage et signalisation)	☐ Eye protection Protecteurs oculaires
☐ _____	☐ Rescue equipment Équipement de secours	☐ Fire extinguishers Extincteurs d'incendie	☐ Face protection Visière
☐ _____	☐ Ground force circuit interrupters Disjoncteur de fuite à la terre et interrupteur de circuit de fuite	☐ _____	

Person in charge - Personne responsable	Signature
Safety Watcher - Gardien	Signature
Entrants - Personnes qui entrent dans l'espace clos _____	_____
Local emergency/medical response teams - Équipes locales d'intervention médicale et d'urgence	Telephone nos. - Nºs de téléphone (___) ___-____ ____

Authorization - Autorisation

I certify that all of the above information is complete and accurate and that all participants have been briefed on the work to be completed.
Je certifie que tous les renseignements susmentionnés sont complets et exacts et que tous les participants ont reçu les instructions relatives au travail à effectuer.

Person in Charge - Personne responsable	Signature

Copy / Copie 2 ▶ **To be completed by Person in Charge and returned to Manager in Charge of Worksite or Supervisor prior to CS entry**
À remplir et à conserver par la personne responsable et retourner au gestionnaire responsable du lieu de travail ou

☐ Contractor
Entrepreneur

☐ PWGSC Personnel
Personnel de TPSGC

CONFINED SPACE ENTRY PERMIT - PERMIS D'ACCÈS À UN ESPACE CLOS

Yes Oui	N/A S.O.	CONFINED SPACE ENTRY CHECKLIST LISTE DE CONTRÔLE POUR EN ESPACE CLOS
☐	☐	All participants have valid certification for this Confined Space Entry. Participants formés pour entrer dans un espace clos.
☐	☐	All participants have been briefed on all potential hazards. Participants au courant des risques potentiels.
☐	☐	All departments have been informed of potential service interruption. Tous les ministères ont été informés de la possibilité d'une interruption de service.
☐	☐	All hazard sources have been isolated, blanked or blocked with locks and tags. Sources de danger isolées, obturées ou verrouillées et étiquetées.
☐	☐	All energy sources have been locked out and tagged. Sources d'alimentation verrouillées et étiquetées.
☐	☐	All potential ignition sources have been eliminated. Sources d'inflammation potentielles éliminées.
☐	☐	All tools and equipment have been checked and found to be in good repair. Outils et équipement vérifiés et jugés en bon état.
☐	☐	The opening for entry into and exit from the Confined Space is sufficient to allow safe passage of a person using protection equipment. L'ouverture prévue pour entrer dans l'espace clos ou pour en sortir est assez grande pour laisser passer une personne munie d'un équipement de protection.
☐	☐	Confined Space has been drained, washed and purged of all potential hazards. Espace clos vidé, lavé et ne présentant plus aucun danger potentiel.
☐	☐	Ventilation provides for a good fresh air supply. L'aération permet un bon approvisionnement en air frais.
☐	☐	All appropriate emergency equipment is readily available. (First Aid Kit, Extinguisher, etc.) Équipement d'urgence facilement accessible (trousse de premiers soins, extincteurs, etc.)
☐	☐	All required atmospheric testing has been completed and recorded. Qualité de l'air évaluée et résultats enregistrés.
☐	☐	All additional permits have been acquired. (Hot Work, etc.) Permis additionnels (pour travail à chaud, par ex.) délivrés.
☐	☐	Area has been secured for entrants and public. Secteur surveillé et isolé.
☐	☐	The Emergency Response Team have been alerted to the CS Entry. Équipe des mesures d'urgence avisée d'une entrée dans un espace clos.
☐	☐	Safety Watcher has been briefed. Gardien mis au courant et posté.

Person in Charge - Personne responsable	Signature

Public Works and Government Services Canada | Travaux publics et Services gouvernementaux Canada

CONFINED SPACE ENTRY PERMIT
PERMIS D'ACCÈS AUX ESPACES CLOS

Valid for eight (8) hours only.
Ce permis est valable pendant huit (8) heures seulement.

Permit no.
Nº du permis

Issue date Date	Time - Heure __:__	Expiry date Date	Time - Heure __:__
Entry date Date d'entrée ▶		Time Heure ▶	__:__
Anticipated exit - Sortie de prévue Date ▶		Time Heure ▶	__:__

Location - Lieu	Dept. - Min.	Confined space no. Nº de l'espace clos	Confined space class Catégorie d'espace clos

Description of work to be completed - Description du travail à effectuer

Yes Oui	N/A S.O.	HAZARDS OF THE CONFINED SPACE RISQUES PRÉSENTÉS PAR L'ESPACE CLOS
☐	☐	Oxygen Hazard: < 19.5% or > 23.0% Manque d'oxygène : < 19.5% ou > 23.0%
☐	☐	Flammables: > 10% of LEL - **Specify** Produits inflammables : 10% de la limite explosive inférieure - **Précisez**
☐	☐	Toxic Chemicals: > TLV-TWA - **Specify** Produits chimiques toxiques : > valeur TLV-TWA - **Précisez**
☐	☐	Mechanical Hazards: - **Specify** Risques mécaniques : - **Précisez**
☐	☐	Electrical Hazards: - **Specify** Chocs électriques : - **Précisez**
☐	☐	Physical Hazards: noise; vibration, light, lazer; x-ray; heat; cold; surfaces; engulfment - **Specify** Risques physiques : bruits; vibrations; lumière; laser; rayons X; chaleur; froid; surfaces; engouffrement - **Précisez**
☐	☐	Others: - **Specify** Autres : - **Précisez**

Equipment required for CS Entry - Équipement requis pour entrer dans l'espace clos

☐ Respiratory/Air purifying protection Dispositif de protection des voies respiratoires et de purification de l'air	☐ Lifelines and Safety harnesses Câble de sauvetage et harnais de sécurité	☐ Lockouts Mécanismes de verrouillage	☐ Hearing protection Protecteurs auditifs
☐ _____	☐ Tripod Trépied	☐ Lighting units Dispositifs d'éclairage	☐ Head protection Casque protecteur
☐ _____	☐ Personal lift Dispositif de levage personnel	☐ Ventilation Équipement d'aération	☐ Hand protection Gants
☐ _____	☐ Tool box Coffre à outils	☐ Secure area (post and flag) Zone protégée (affichage et signalisation)	☐ Eye protection Protecteurs oculaires
☐ _____	☐ Rescue equipment Équipement de secours	☐ Fire extinguishers Extincteurs d'incendie	☐ Face protection Visière
☐ _____	☐ Ground force circuit interrupters Disjoncteur de fuite à la terre et interrupteur de circuit de fuite	☐ _____	

Person in charge - Personne responsable — Signature

Safety Watcher - Gardien — Signature

Entrants - Personnes qui entrent dans l'espace clos

_____ _____

Local emergency/medical response teams - Équipes locales d'intervention médicale et d'urgence — Telephone nos. - Nºs de ( ) - [ ]

Authorization - Autorisation

I certify that all of the above information is complete and accurate and that all participants have been briefed on the work to be completed.
Je certifie que tous les renseignements susmentionnés sont complets et exacts et que tous les participants ont reçu les instructions relatives au travail à effectuer.

Person in Charge - Personne responsable | Signature

PWGSC-TPSGC 101 (9/96)

Copy / Copie 3 ▶ **To be completed by Person in Charge, posted at Entry site and returned to Manager in Charge of Worksite or Supervisor upon completion of the work**
À remplir par la personne responsable, afficher à l'entrée de l'espace clos et retourner au gestionnaire responsable du lieu de travail ou le superviseur une fois le travail terminé

☐ Contractor
Entrepreneur

☐ PWGSC Personnel
Personnel de TPSGC

ATMOSPHERIC MONITORING - ÉVALUATION DE L'AIR

Test	Allowable limits Limites permises	Initial results Résultats préliminaires	Results - Résultats AM Matin PM Après-midi	Results - Résultats AM Matin PM Après-midi	Final results Résultats définitifs
Oxygen Oxygène	> 19.5% < 23%				
Flammability Inflammation	10% LEL				
H_2S	10 ppm				
CO	25 ppm				
Temperature Température	ºC				

Entry date Date d'entrée ▶	Time Heure ▶ __:__
Exit date Date de sortie ▶	Time Heure ▶ __:__
Area secured - Secteur surveillé Date ▶	Time Heure ▶ __:__
Person in Charge - Personne responsable	Signature

Atmospheric Monitoring conducted by - Évaluation de l'air menée par

Device - Appareil	Calibration date - Date d'étalonnage	Calibrated by - Étalonner par
Name - Nom		Title - Titre
Signature		Telephone number - Numéro de téléphone (___) ___-____ _____

PWGSC-TPSGC 101 (9/96)

NOTE: A hard copy, or machine readable version, of this permit must be maintained for a period of two (2) years after the date initializing the permit or for ten (10) years if any portion of the verification procedures were not complied with.

NOTA : Une copie à lire, ou une version lisible par machine, de ce permis doit être conservée pendant deux (2) ans après la date d'émission ou pendant dix (10) ans si les procédures de vérification n'ont pas été suivies.

Public Works and Government Services Canada | Travaux publics et Services gouvernementaux Canada

CONFINED SPACE ENTRY LOG
REGISTRE D'ACCÈS AUX ESPACES CLOS

Site supervisor - Superviseur du site	Telephone number - Numéro de téléphone ( ) - [ ]

Name Nom	Date	Confined Space Location Identification de l'espace	Time in Heure d'entrée	Time out Heure de sortie
			:	:
			:	:
			:	:
			:	:
			:	:
			:	:
			:	:
			:	:
			:	:
			:	:
			:	:
			:	:
			:	:
			:	:
			:	:
			:	:
			:	:
			:	:
			:	:
			:	:

Public Works and Government Services Canada | Travaux publics et Services gouvernementaux Canada

CONFINED SPACE HAZARD ASSESSMENT
ÉVALUATION DES RISQUES DES ESPACES CLOS

Note: **To be reviewed every three years**
Remarque : **À revoir tous les trois ans**

CS no.	Class	Location	Description	Potential hazards Risques potentiels	Suggested control measures Mesures de contrôle suggérés	Assessment dates Dates d'évaluation
				Oxygen hazard Risques atmosphériques		
Hazard Assessment Readings - Relevé pour l'évaluation des risques CO: _____ H2S: _____ O2: _____ % LEL: % LEI : _____ Conducted by: Effectuée par : _____ Signature: _____ Date: _____				Flammables Matières inflammables		
				Toxic chemicals Produits chimiques toxiques		
				Mechanical hazards Risques mécaniques		
				Electrical hazards Risques électriques		
				Physical hazards Risques physiques		
				Others - Divers		

Activities conducted in area - Activités exercées dans la zone

Frequency - Fréquence

ANNEXE C

Permis de travail à haute température
(only available in french)

Brookfield
Solutions Globales Intégrées

PERMIS DE TRAVAIL À HAUTE TEMPÉRATURE

Date: _____ Lieu: _____ Bon de travail #:_____

Description de la tâche:_____

Nom des personnes effectuant les travaux : _____

Permis expire le : Date _____ Heure _____ (hh:mm)

Je me suis assuré que le lieu de travail ait été vérifié, que les précautions cochées ci-dessous ont été prises afin de prévenir les incendies et que les autorisations ont été obtenues pour ce travail.

_____
(Nom et Signature de la personne autorisant le permis)

Précautions

La personne autorisant le permis doit inspecter la zone de travail et cocher toutes les précautions prises pour prévenir un incendie.

Généralités :

OK N/A

- ☐ ☐ Gicleurs ou boyaux incendie sont opérationnels.
- ☐ ☐ Extincteur chargé et prêt à être utilisé sur le lieu de travail.
- ☐ ☐ Outils de coupe ou de soudure en bon état.
- ☐ ☐ L'atmosphère est libre de tout gaz et vapeurs inflammables.
- ☐ ☐ Tous les équipements ont été nettoyés de tous combustibles / matériaux inflammables.
- ☐ ☐ Le responsable du lieu de travail et le personnel ont été avisés des travaux.
- ☐ ☐ Les numéros des contacts pour les urgences sont à l'endos du permit.

Exigences dans un rayon de 15m ou____m du travail à chaud (si indiqué autrement par la personne autorisant le permis):

- ☐ ☐ Les planchers de la zone de travail ont été bien nettoyés.
- ☐ ☐ Les matériaux combustibles ou liquides inflammable (MCLI) ont été enlevés.
- ☐ ☐ Les MCLI doivent être protégés au moyen de matériaux incombustibles si leur déplacement est impossible.
- ☐ ☐ Les murs, les cloisons et le plafond combustible sont protégés avec des matériaux incombustibles.
- ☐ ☐ Les planchers et les surfaces inflammables sont mouillés ou recouvert de bâches résistantes au feu
- ☐ ☐ Les ouvertures (murs et planchers) sont fermées ou les sections concernées sont protégées contre les étincelles.
- ☐ ☐ Le personnel est protégé contre le risque d'électrisation lorsque les planchers sont mouillés.
- ☐ ☐ Les conduits et les convoyeurs transportant du matériel combustible sont recouverts, protégés ou à l'arrêt.

Travail à faire sur des murs, plafond ou le toit :

- ☐ ☐ La construction est non combustible et ne possède pas d'isolant ou de revêtement combustible
- ☐ ☐ Le matériel combustible de l'autre côté du mur, du plafond ou du toit a été enlevé ou protégé.

Travail à faire sur des récipients fermés :

- ☐ ☐ Les contenants fermés ou la tuyauterie a été purgés des vapeurs inflammables. Un explosimètre est utilisé.
- ☐ ☐ Les récipients et les conduits ont été vidés de tout combustible et nettoyés.

Guet incendie : (Habituellement la personne qui effectue les travaux)

- ☐ ☐ Sur place pendant toute la durée des travaux et 60 minutes après la fin des travaux.
- ☐ ☐ En possession d'un extincteur ou boyau incendie, sait s'en servir et comment sonner l'alarme.
- ☐ ☐ D'autres guets peuvent être requis dans des sections avoisinantes, au-dessus ou en-dessous de la zone.

Heure du début des travaux : _____ (hh:mm) Heure de fin des travaux : _____ (hh:mm)

Inspection finale

Le lieu de travail a été surveillé et inspecté pendant 4 heures après la fin des travaux et a été jugé sécuritaire et sans début d'incendie.

Heure de l'inspection finale : _____ (hh:mm)

Vérifié par : _____
(Nom et signature)

Copies : 1. Garder sur le lieu de travail 2. Pour vos dossiers 3. Pour votre directeur ou le client

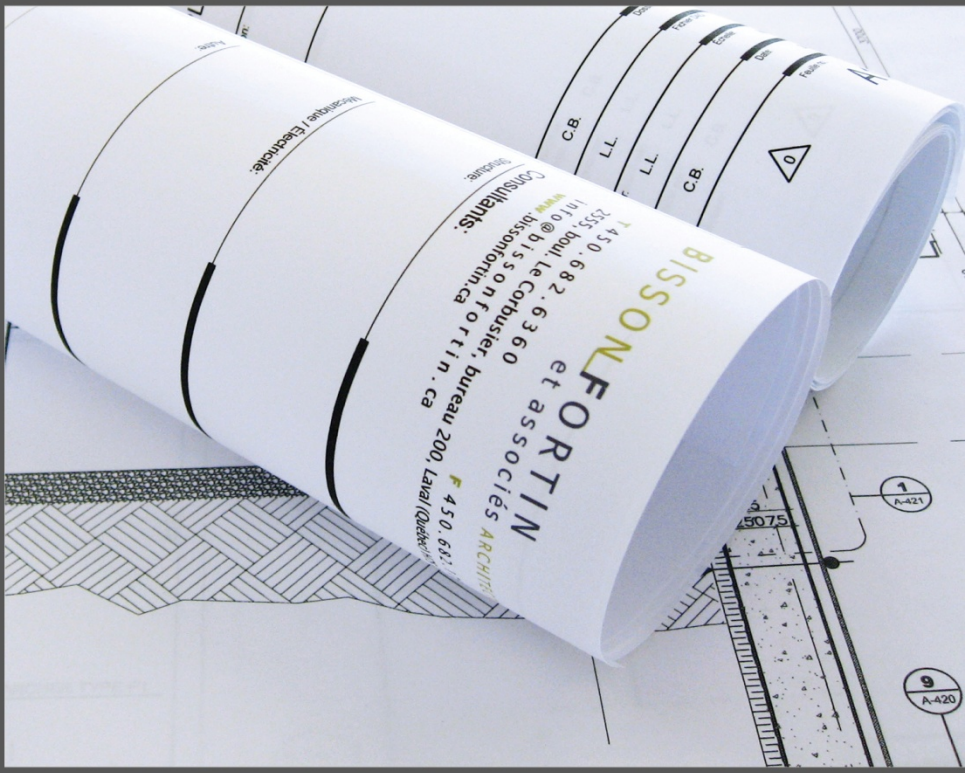

BISSON FORTIN
ARCHITECTURE + DESIGN
2555, boul. Le Corbusier , bureau 200 | Laval | Québec | H7S 1Z4
T 450.682.6360 F 450.682.1751 www.bissonfortin.ca