Public Works and Government Services Canada | Travaux publics et Services gouvernementaux Canada

RETURN BIDS TO:
RETOURNER LES SOUMISSIONS À:

Bid Receiving - PWGSC / Réception des soumissions - TPSGC
11 Laurier St. / 11, rue Laurier
Place du Portage , Phase III
Core 0B2 / Noyau 0B2
Gatineau
Québec
K1A 0S5
Bid Fax: (819) 997-9776

REQUEST FOR PROPOSAL
DEMANDE DE PROPOSITION

Proposal To: Public Works and Government Services Canada

We hereby offer to sell to Her Majesty the Queen in right of Canada, in accordance with the terms and conditions set out herein, referred to herein or attached hereto, the goods, services, and construction listed herein and on any attached sheets at the price(s) set out therefor.

Proposition aux: Travaux Publics et Services Gouvernementaux Canada

Nous offrons par la présente de vendre à Sa Majesté la Reine du chef du Canada, aux conditions énoncées ou incluses par référence dans la présente et aux annexes ci-jointes, les biens, services et construction énumérés ici sur toute feuille ci-annexée, au(x) prix indiqué(s).

Comments - Commentaires

Title - Sujet
Multibeam Bathymetric Sonar System

Solicitation No. - N° de l'invitation	**Date**
F7044-170200/A	2017-04-03

Client Reference No. - N° de référence du client
F7044-170200

GETS Reference No. - N° de référence de SEAG
PW-$$ML-043-26280

File No. - N° de dossier	**CCC No./N° CCC - FMS No./N° VME**
043ml.F7044-170200	

Solicitation Closes - L'invitation prend fin
at - à 02:00 PM
on - le 2017-05-16

Time Zone
Fuseau horaire
Eastern Daylight Saving Time EDT

F.O.B. - F.A.B.
Plant-Usine: ☐ **Destination:** ☐ **Other-Autre:** ☐

Address Enquiries to: - Adresser toutes questions à:	**Buyer Id - Id de l'acheteur**
Byron, Dan	043ml

Telephone No. - N° de téléphone	**FAX No. - N° de FAX**
(819) 956-0691 ( )	( ) -

Destination - of Goods, Services, and Construction:
Destination - des biens, services et construction:
DEPARTMENT OF FISHERIES AND OCEANS
GCC Quebec
101 Boulevard Cahmplain
QUEBEC CITY
QC
G1K7Y7
Canada

Instructions: See Herein

Instructions: Voir aux présentes

Vendor/Firm Name and Address
Raison sociale et adresse du fournisseur/de l'entrepreneur

Delivery Required - Livraison exigée	**Delivery Offered - Livraison proposée**
See Herein	

Vendor/Firm Name and Address
Raison sociale et adresse du fournisseur/de l'entrepreneur

Telephone No. - N° de téléphone
Facsimile No. - N° de télécopieur

Name and title of person authorized to sign on behalf of Vendor/Firm (type or print)
Nom et titre de la personne autorisée à signer au nom du fournisseur/ de l'entrepreneur (taper ou écrire en caractères d'imprimerie)

Signature **Date**

Issuing Office - Bureau de distribution
Marine Machinery and Services / Machineries et services maritimes
11 Laurier St. / 11, rue Laurier
6C2, Place du Portage
Gatineau
Québec
K1A 0S5

Canada

TABLE OF CONTENTS

PART 1 - GENERAL INFORMATION

1.1 Introduction

The bid solicitation is divided into seven parts plus attachments and annexes, as follows:

Part 1 General Information: provides a general description of the requirement;

Part 2 Bidder Instructions: provides the instructions, clauses and conditions applicable to the bid solicitation;

Part 3 Bid Preparation Instructions: provides Bidders with instructions on how to prepare their bid;

Part 4 Evaluation Procedures and Basis of Selection: indicates how the evaluation will be conducted, the evaluation criteria that must be addressed in the bid, and the basis of selection;

Part 5 Certifications and Additional Information: includes the certifications and additional information to be provided;

Part 6 Security, Financial and Other Requirements: includes specific requirements that must be addressed by Bidders; and

Part 7 Resulting Contract Clauses: includes the clauses and conditions that will apply to any resulting contract.

The Annexes include the Statement of Requirement, the Basis of Payment, technical evaluation criteria, point rated technical scoring, technical selection, the Electronic Payment Instruments, the Federal Contractors Program for Employment Equity - Certification.

1.2 Summary

To Provide Fisheries and Oceans, with two (2) Multibeam Bathymetric Sonar Systems for use in Canadian Hydrographic Service (CHS) Hydrographic Surveys and Seabed Mapping.

1.2.1 The Canadian Hydrographic Service (CHS) in cooperation with the Canadian Coast Guard (CCG) requires two Multibeam Bathymetric Sonar System which include sonar head, sonar processor unit, Position and Orientation system, acquisition/display software, deployment/retrieval system including auxiliaries, manuals, warranty for near to midshore hydrographic survey work in the Canadian Arctic. The minimum and maximum operating depths of the equipment is between 10 metres and 2000 metres.. The sonar will be used in an operational hydrographic surveying capacity aboard Canadian Coast Guard Icebreakers (approximately 100 metres in length). The icebreakers are Arctic Shipping Pollution Regulation (ASPPR) Arctic Class AC 4. The intended vessels for installation of this equipment will be the CCGS Des Grosiliersier and the CCGS Pierre Radisson

1.2.1.1 Option for one (1) additional Multibeam Bathymetric Sonar System. In addition to the requirement in 1.2.1, above, Canada shall have the irrevocable option to purchase a maximum of 1 additional Multibeam Bathymetric Sonar System under the same terms and conditions specified in the Contract, and at the prices provided for below. The option(s) may be exercised

at any time up to 3 years from contract award. The option, may only be exercised by the Contracting Authority.

Bidders must propose a firm price for the option described in Annex A, delivery to Canadian Coast Guard Base GCC Quebec 101 Boul Champlain, Quebec, Quebec G1K 7Y7

1.2.2 The requirement is subject to the provisions of the World Trade Organization Agreement on Government Procurement (WTO-AGP), the North American Free Trade Agreement (NAFTA), and the Agreement on Internal Trade (AIT).

1.3 Debriefings

Bidders may request a debriefing on the results of the bid solicitation process. Bidders should make the request to the Contracting Authority within 15 working days from receipt of the results of the bid solicitation process. The debriefing may be in writing, by telephone or in person.

PART 2 - BIDDER INSTRUCTIONS

2.1 Standard Instructions, Clauses and Conditions

All instructions, clauses and conditions identified in the bid solicitation by number, date and title are set out in the *Standard Acquisition Clauses and Conditions Manual* (https://buyandsell.gc.ca/policy-and-guidelines/standard-acquisition-clauses-and-conditions-manual) issued by Public Works and Government Services Canada.

Bidders who submit a bid agree to be bound by the instructions, clauses and conditions of the bid solicitation and accept the clauses and conditions of the resulting contract.

The 2003 (2016-04-04) Standard Instructions - Goods or Services - Competitive Requirements, are incorporated by reference into and form part of the bid solicitation.

2.1.1 *SACC* Manual Clauses

B1000T (2014-06-26) Condition of Materials applies to this solicitation
4001 (2015-04-01) Hardware Purchase, Lease and Maintenance

2.2 Submission of Bids

Bids must be submitted only to Public Works and Government Services Canada (PWGSC) Bid Receiving Unit by the date, time and place indicated on page 1 of the bid solicitation.

Due to the nature of the bid solicitation, bids transmitted by facsimile to PWGSC will not be accepted.

2.3 Enquiries - Bid Solicitation

All enquiries must be submitted in writing to the Contracting Authority no later than 5 calendar days before the bid closing date. Enquiries received after that time may not be answered.

Bidders should reference as accurately as possible the numbered item of the bid solicitation to which the enquiry relates. Care should be taken by Bidders to explain each question in sufficient detail in order to enable Canada to provide an accurate answer. Technical enquiries that are of a proprietary nature must be clearly marked "proprietary" at each relevant item. Items identified as “proprietary” will be treated as such except where Canada determines that the enquiry is not of a proprietary nature. Canada may edit the question(s) or may request that the Bidder do so, so that the proprietary nature of the question(s) is eliminated and the enquiry can be answered to all Bidders. Enquiries not submitted in a form that can be distributed to all Bidders may not be answered by Canada.

2.4 Applicable Laws

Any resulting contract must be interpreted and governed, and the relations between the parties determined, by the laws in force in Quebec.

Bidders may, at their discretion, substitute the applicable laws of a Canadian province or territory of their choice without affecting the validity of their bid, by deleting the name of the Canadian province or territory specified and inserting the name of the Canadian province or territory of their choice. If no change is made, it acknowledges that the applicable laws specified are acceptable to the Bidders.

2.5 Bidders' Conference

A bidder's conference chaired by the Contracting Authority will be held on April 26, 2017 at 1:00 PM (location to be determined). The scope of the requirement outlined in the solicitation will be reviewed during the conference and questions will be answered. It is recommended that bidders who intend to submit a bid attend or send representation.

Bidders are requested to communicate with the CA before the conference to confirm attendance. Bidders should provide, in writing to the CA, the names of the person(s) who will be attending no later than April 24, 2017.

Any clarifications or changes to the bid solicitation resulting from the bidders' conference will be included as an amendment to the bid solicitation.

2.6 Mandatory Site Visit

It is mandatory that the Bidder or a representative of the Bidder visit the work site. Arrangements have been made for the site visit to be held on April 26, 2017. The site visit will begin at 9:00 EDT, onboard the vessel (location to be determined)

Bidders must communicate with the Contracting Authority no later than April 24. 2017 to confirm attendance and provide the name(s) of the person(s) who will attend. Bidders will be required to sign an attendance sheet. Bidders should confirm in their bid that they have attended the site visit. Bidders who do not attend the mandatory site visit or do not send a representative will not be given an alternative appointment and their bid will be declared non-responsive. Any clarifications or changes to the bid solicitation resulting from the site visit will be included as an amendment to the bid solicitation

2.7 Availability of Drawings/ Ship Scans

Drawings are available upon request. Bidders are to e-mail their request for drawings to dan.byron@tpsgc-pwgsc.gc.ca specifying the PSPC file number F7044-170200. Bidders are responsible to request drawings early enough to ensure that the drawings are received before bid close

2.8 Delivery

Delivery of all equipment including all technical information for the CCGS Des Groseilliers is required on or before October 20, 2017 at the CCG base in Quebec City.

Delivery of all equipment including all technical information for the CCGS Pierre Radisson is required on or before March 1, 2018 at the CCG base in Quebec City.

Delivery Address:

CCGS Des Groseilliers, att: Chief Engineer
GCC base Quebec
101 Boul Champlain
Quebec, Quebec
G1K 7Y7

CCGS base Pierre Raddison, att: Chief Engineer
GCC Quebec
101 Boul Champlain
Quebec, Quebec
G1K 7Y7

Delivery of Engineering package including valve details is required May 22, 2017 to the Technical Authority.

PART 3 - BID PREPARATION INSTRUCTIONS

3.1 Bid Preparation Instructions

Canada requests that Bidders provide their bid in separately bound sections as follows:

Section I: Technical Bid (2 hard copies) and 2 selectronic copies on memory sticks

Section II: Financial Bid (1 hard copies)

Section III: Certifications (1 hard copies)

If there is a discrepancy between the wording of the soft copy and the hard copy, the wording of the hard copy will have priority over the wording of the soft copy.

Prices must appear in the financial bid only. No prices must be indicated in any other section of the bid.

Canada requests that Bidders follow the format instructions described below in the preparation of their bid:

(a)use 8.5 x 11 inch (216 mm x 279 mm) paper;
(b)use a numbering system that corresponds to the bid solicitation.

In April 2006, Canada issued a policy directing federal departments and agencies to take the necessary steps to incorporate environmental considerations into the procurement process Policy on Green Procurement (http://www.tpsgc-pwgsc.gc.ca/ecologisation-greening/achats-procurement/politique-policy-eng.html). To assist Canada in reaching its objectives, Bidders should:

1) use 8.5 x 11 inch (216 mm x 279 mm) paper containing fibre certified as originating from a sustainably-managed forest and containing minimum 30% recycled content; and

2) use an environmentally-preferable format including black and white printing instead of colour printing, printing double sided/duplex, using staples or clips instead of cerlox, duotangs or binders.

Section I: Technical Bid

In their technical bid, Bidders should demonstrate their understanding of the requirements contained in the bid solicitation and explain how they will meet these requirements. Bidders should demonstrate their capability and describe their approach in a thorough, concise and clear manner for carrying out the work.

The technical bid should address clearly and in sufficient depth the points that are subject to the evaluation criteria against which the bid will be evaluated. Simply repeating the statement contained in the bid solicitation is not sufficient. In order to facilitate the evaluation of the bid, Canada requests that Bidders address and present topics in the order of the evaluation criteria

under the same headings. To avoid duplication, Bidders may refer to different sections of their bids by identifying the specific paragraph and page number where the subject topic has already been addressed.

The Bidder must provide all of the technical requirements as referenced in Annex "C" Technical Evaluation Criteria

Section II: Financial Bid

Bidders must submit their financial bid in accordance with the Financial Bid Presentation Sheet in Annex “B” Basis of Payment.

3.1.1 The price of the bid will be evaluated in Canadian dollars, Applicable Taxes excluded, FOB destination, Canadian customs duties and excise taxes included.

3.1.2 Electronic Payment of Invoices – Bid

If you are willing to accept payment of invoices by Electronic Payment Instruments, complete Annex “F” Electronic Payment Instruments, to identify which ones are accepted.

If Annex “F” Electronic Payment Instruments is not completed, it will be considered as if Electronic Payment Instruments are not being accepted for payment of invoices.

Acceptance of Electronic Payment Instruments will not be considered as an evaluation criterion.

3.1.3 *SACC Manual* Clauses

SACC Manual Clause A0220T (2014-06-26) Evaluation of Price**.**

Section III: Certifications

Bidders must submit the certifications and additional information required under Part 5.

PART 4 - EVALUATION PROCEDURES AND BASIS OF SELECTION

4.1 Evaluation Procedures

(a) Bids will be assessed in accordance with the entire requirement of the bid solicitation including the technical and financial evaluation criteria.

(b) An evaluation team composed of representatives of Canada will evaluate the bids.

4.1.1 Technical Evaluation

Mandatory and point rated technical evaluation criteria are included in Annex C. Point rated Technical scoring is included in Annex D.

4.1.2 Financial Evaluation

4.1.2.1 Mandatory Financial Criteria

The price of the bid will be evaluated in Canadian dollars, Applicable Taxes excluded, FOB destination, Canadian customs duties and excise taxes included.

Bidders must submit their financial bid in accordance with the Financial Bid Presentation Sheet in Annex “B” Basis of Payment

4.2 Basis of Selection

4.2.1 Basis of Selection – Highest Combined Rating of Technical Merit and Price

SACC Manual Clause A0027T , Basis of Selection – Highest Combined Rating of Technical Merit and Price

Refer to Annex E – Basis of Selection

PART 5 – CERTIFICATIONS AND ADDITIONAL INFORMATION

Bidders must provide the required certifications and additional information to be awarded a contract.

The certifications provided by Bidders to Canada are subject to verification by Canada at all times. Unless specified otherwise, Canada will declare a bid non-responsive, or will declare a contractor in default if any certification made by the Bidder is found to be untrue, whether made knowingly or unknowingly, during the bid evaluation period or during the contract period.

The Contracting Authority will have the right to ask for additional information to verify the Bidder's certifications. Failure to comply and to cooperate with any request or requirement imposed by the Contracting Authority will render the bid non-responsive or constitute a default under the Contract.

5.1 Certifications Required with the Bid

Bidders must submit the following duly completed certifications as part of their bid.

5.1.1 Integrity Provisions - Declaration of Convicted Offences

In accordance with the *Ineligibility and Suspension Policy* (http://www.tpsgc-pwgsc.gc.ca/ci-if/politique-policy-eng.html), the Bidder must provide with its bid the required documentation, as applicable, to be given further consideration in the procurement process.

5.2 Certifications Precedent to Contract Award and Additional Information

The certifications and additional information listed below should be submitted with the bid but may be submitted afterwards. If any of these required certifications or additional information is not completed and submitted as requested, the Contracting Authority will inform the Bidder of a time frame within which to provide the information. Failure to provide the certifications or the additional information listed below within the time frame specified will render the bid non-responsive.

5.2.1 Integrity Provisions – Required Documentation

In accordance with the Ineligibility and Suspension Policy (http://www.tpsgc-pwgsc.gc.ca/ci-if/politique-policy-eng.html), the Bidder must provide the required documentation, as applicable, to be given further consideration in the procurement process.

5.2.2 Federal Contractors Program for Employment Equity - Bid Certification

By submitting a bid, the Bidder certifies that the Bidder, and any of the Bidder's members if the Bidder is a Joint Venture, is not named on the Federal Contractors Program (FCP) for employment equity "FCP Limited Eligibility to Bid" list available at the bottom of the page of the Employment and Social Development Canada (ESDC) - Labour's website

(http://www.esdc.gc.ca/en/jobs/workplace/human_rights/employment_equity/federal_contractor_program.page?&_ga=1.229006812.1158694905.1413548969#afed).

Canada will have the right to declare a bid non-responsive if the Bidder, or any member of the Bidder if the Bidder is a Joint Venture, appears on the “FCP Limited Eligibility to Bid“list at the time of contract award.

Canada will also have the right to terminate the Contract for default if a Contractor, or any member of the Contractor if the Contractor is a Joint Venture, appears on the “FCP Limited Eligibility to Bid” list during the period of the Contract.

The Bidder must provide the Contracting Authority with a completed annex Federal Contractors Program for Employment Equity - Certification, before contract award. If the Bidder is a Joint Venture, the Bidder must provide the Contracting Authority with a completed annex Federal Contractors Program for Employment Equity - Certification, for each member of the Joint Venture.

PART 6 - RESULTING CONTRACT CLAUSES

The following clauses and conditions apply to and form part of any contract resulting from the bid solicitation.

6.1 Statement of Requirement

The Contractor must provide the items detailed under the "Requirement" at Annex "A".

6.1.1 Option to purchase

The Contractor grants to Canada the irrevocable option to acquire one additional Multibeam Bathymetric Sonar Systems described in Annex A of the Contract under the same conditions and at the prices and/or rates stated in the Contract. The option may only be exercised by the Contracting Authority and will be evidenced, for administrative purposes only, through a contract amendment.

The Contracting Authority may exercise the option three years after Contract award by sending a written notice to the Contractor.

6.2 Standard Clauses and Conditions

All clauses and conditions identified in the Contract by number, date and title are set out in the Standard Acquisition Clauses and Conditions Manual(https://buyandsell.gc.ca/policy-and-guidelines/standard-acquisition-clauses-and-conditions-manual) issued by Public Works and Government Services Canada.

6.2.1 General Conditions

2030 (2016-04-04) General Conditions - Higher Complexity - Goods, apply to and form part of the Contract.

6.2.2 Supplemental General Conditions

B1000T (2014-06-26), apply to and form part of the Contract.
4001 (2015-04-01) apply to and form part of the Contract.

6.3 Security Requirements

There is no security requirement applicable to the Contract.

6.4 Term of Contract

6.4.2 Delivery Date

Delivery of all equipment including all technical information for the CCGS Des Groseilliers is required on or before October 20, 2017 at the CCG base in Quebec City.

Delivery of all equipment including all technical information for the CCGS Pierre Radisson is required on or before March 1, 2018 at the CCG base in Quebec City.

Delivery of Engineering package including valve details is required May 19, 2017 to the Technical Authority.

6.4.5 Delivery

Delivery of the requirement will be made to the following address:

CCGS Des Groseilliers att : Chief Engineer
GCC base Quebec
101 Boul Champlain
Quebec, Quebec
G1K 7Y7

CCGS Pierre Radisson att : Chief Engineer
GCC base Quebec
101 Boul Champlain
Quebec, Quebec
G1K 7Y7

6.5 Authorities

6.5.1 Contracting Authority

The Contracting Authority for the Contract is:

Name: Dan Byron
Public Works and Government Services Canada
Acquisitions Branch
Directorate: Refit
Address: 11 Laurier Street
Gatineau, Quebec
K1A 0S5

Telephone: 819-420-2898
E-mail address: dan.byron@pwgsc.gc.ca

The Contracting Authority is responsible for the management of the Contract and any changes to the Contract must be authorized in writing by the Contracting Authority. The Contractor must not perform work in excess of or outside the scope of the Contract based on verbal or written requests or instructions from anybody other than the Contracting Authority.

6.5.2 Technical Authority

The Technical Authority for the Contract is:

Name: TBD

Title: _____

Organization: _____

Address: _____

Telephone: ___-___-____

Facsimile: ___-___-____

E-mail: _____.

The Technical Authority named above is the representative of the department or agency for whom the Work is being carried out under the Contract and is responsible for all matters concerning the technical content of the Work under the Contract. Technical matters may be discussed with the Technical Authority, however the Technical Authority has no authority to authorize changes to the scope of the Work. Changes to the scope of the Work can only be made through a contract amendment issued by the Contracting Authority.

6.6 Payment

6.6.1 Basis of Payment

In consideration of the Contractor satisfactorily completing all of its obligations under the Contract, the Contractor will be paid *firm prices as specified in Annex* B. Customs duties are *included* and Applicable Taxes are extra.

A 10% holdback for the equipment will be applied to the invoice, to be released after final acceptance during the refit.

6.6.2 Limitation of Price

Canada will not pay the Contractor for any design changes, modifications or interpretations of the Work unless they have been approved, in writing, by the Contracting Authority before their incorporation into the Work.

6.6.3 Payment

Canada will pay the Contractor upon completion and delivery of Work in accordance with the payment provisions of the Contract if:

a. an accurate and complete invoice and any other documents required by the Contract have been submitted in accordance with the invoicing instructions provided in the Contract;

b. all such documents have been verified by Canada;

c. the Work delivered has been accepted by Canada.

6.6.4 Electronic Payment of Invoices – Contract

The Contractor accepts to be paid using any of the following Electronic Payment Instrument(s):

a. Visa Acquisition Card;
b. MasterCard Acquisition Card;
c. Direct Deposit (Domestic and International);
d. Electronic Data Interchange (EDI);
e. Wire Transfer (International Only);
f. Large Value Transfer System (LVTS) (Over $25M)

6.7 Invoicing Instructions

6.7.1. The Contractor must submit invoices in accordance with the section entitled "Invoice Submission" of the general conditions.

(a) One (1) copy must be forwarded to the contracting authority.

(b) one (1) copy must be forwarded to the Technical Authority identified under the section entitled "Authorities" of the Contract.

6.7.2 Canada will pay the Contractor upon completion and delivery of the Work in accordance with the payment provisions of the Contract if:

a. an accurate and complete invoice and any other documents required by the Contract have been submitted in accordance with the invoicing instructions provided in the Contract;

b. all such documents have been verified by Canada;

c. the Work delivered has been accepted by Canada.

6.8 Certifications and Additional Information

6.8.1 Compliance

Unless specified otherwise, the continuous compliance with the certifications provided by the Contractor in its bid or precedent to contract award, and the ongoing cooperation in providing additional information are conditions of the Contract and failure to comply will constitute the Contractor in default. Certifications are subject to verification by Canada during the entire period of the Contract.

6.8.2 Federal Contractors Program for Employment Equity - Default by the Contractor

The Contractor understands and agrees that, when an Agreement to Implement Employment Equity (AIEE) exists between the Contractor and Employment and Social Development Canada (ESDC)-Labour, the AIEE must remain valid during the entire period of the Contract. If the AIEE becomes invalid, the name of the Contractor will be added to the "FCP Limited Eligibility to Bid" list. The imposition of such a sanction by ESDC will constitute the Contractor in default as per the terms of the Contract.

6.8.3 *SACC Manual* Clauses

B7500C (2006-06-16) Excess Goods
D9002C (2007-11-30) Incomplete assemblies

6.9 Applicable Laws

The Contract must be interpreted and governed, and the relations between the parties determined, by the laws in force in _____.

6.10 Priority of Documents

If there is a discrepancy between the wording of any documents that appear on the list, the wording of the document that first appears on the list has priority over the wording of any document that subsequently appears on the list.

(a) the Articles of Agreement;
(b) the supplemental general conditions B1000T (2014-06-26)
(c) the general conditions 2030 (2016-04-04) General Conditions
(d) Annex A, Statement of Requirement;
(e) Annex B, Basis of Payment;
(f) the Contractor's bid dated _____,

ANNEX "A" STATEMENT OF REQUIREMENT

Multibeam Bathymetric Sonar Systems for use in Canadian Hydrographic Service (CHS) Hydrographic Surveys and Seabed Mapping

To Provide Fisheries and Oceans, with a quantity of two (2) Multibeam Bathymetric Sonar Systems for use in Canadian Hydrographic Service (CHS) Hydrographic Surveys and Seabed Mapping. The icebreakers are Arctic Shipping Pollution Regulation (ASPPR) Arctic Class AC 4.

SPECIFICATIONS

1.0 Scope:

The Canadian Hydrographic Service (CHS) requires a Multibeam Bathymetric Sonar System with a (sonar head, sonar processor unit, Position and Orientation system, acquisition/display software, deployment/retrieval system including auxiliaries, manuals, warranty) for the near to midshore (>10-2500 m) hydrographic survey work in the Canadian Arctic. The sonar will be used in an operational hydrographic surveying capacity aboard Canadian Coast Guard Icebreakers (approximately 100 metres in length).

1. General Terms:

a. Sonar System proposed must be “off-the-shelf” commercially available.
b. The multibeam sonar must be a beam forming multibeam sonar. Contractors proposing 2 separate and distinct systems to meet these specifications will not be considered for this requirement.
c. Contractors proposing Interferometric or Bathymetric Sidescan systems will not be considered for this requirement.
d. Deployment/retrieval system must use a powered ram through a Classification society approved through hull valve.
e. Contractor must provide preliminary engineering details to enable CCG to develop technical data package for shipyard installation.
f. Contractor must provide final installation and commissioning services and participate in an on-site sea trial aboard the ship(s). The date for sea trials is set for the summer of 2018 on the east coast of Canada. These trials must be conducted prior to consignee acceptance and final payment.

2. Technical Description:

2.1 General System Features:

a. System must have an operating frequency that allows a minimum depth of 10m and maximum depth of approximately 2500m.
b. System must utilize both Frequency Modulated (FM) and Continuous Wave (CW) pulse types.
c. The system must provide bathymetric data across a swath, at minimum, 3 times the water depth in up to 700 metres and must do +/- 65 degrees, roll stabilized swath sector in typical operating conditions.
d. The system must utilize sound speed at sonar head depth in real time.
e. The system must do receive beam focusing.
f. The system must ensure all components maintain a coherent sense of time with measurable latencies.

g. The system must provide imagery (acoustic backscatter intensity) data of the seafloor. The backscatter must be calibrated; source levels and gain settings should be recorded with the data.
h. The system must have as standard or be upgradeable to log acoustic backscatter of the water column (volume backscatter), preferably to a separate file.
i. Both the bathymetric data and imagery must be provided in a format which can be readily imported into CARIS HIPS/SIPS software package, preferably via a full function CARIS data import parser.
j. The system must be compatible with Hysweep or QPS Quaility Integrated Navigation System (QINSy) data logging software.
k. The system must accept and utilize vessel motion correctors (i.e., heave, pitch, roll, and heading) from an Applanix POS/MV320 IMU, and sound speed profile correctors from AML sensors. Any or all of these corrections may be applied through both the manufacturer's proprietary software package in real time and in post-processing through CARIS HIPS/SIPS. Motion corrections applied in the sonar software must be flagged within the data stream to indicate what specific corrections were made within the sonar software.
l. The system must do roll-stabilization. It must be capable of +/- 65 degrees swath sector with up to +/- 5 degrees of roll. The system must dynamically steer all beams based on the measured roll, not eliminate beams that roll outside of the desired sector.
m. The system must be capable of pitch and yaw stabilization at a minimum +/- 5 degrees of pitch and yaw.
n. The system must supply, within its data stream, a beam quality indicator that can be captured in Post-Processing for Quality Control.
o. The deployment/retrieval system must include all equipment, components assemblies and auxiliaries necessary to install, deploy, operate and retrieve the wet end of the sonar system.
p. The through hull valve, must be power actuated by way of an electrohydraulic power pack. All actuation powered cabling, tubing, pipework and hosing, must be supplied to allow the power pack to be install a minimum of five (5) metres from the ram itself. Cabling, local panels including safety breakers must allow power to be routed from the ship's source located within 5 metres of the power pack (10 metres) from the ram.
q. The deployment ram assembly must include a sea chest /docking bay inboard of the through hull valve allowing service access to the wet end transducers for repair and replacement. Access to the retracted transducers must be capable only when the through-hull valve is in a closed position.
r. Deployment system must be located within an operational compartment onboard the ship. The proposed design must be self-contained and made watertight against water pressures. This must be accomplished with proven watertight glands/stuffing boxes.
s. The deployment ram system will be installed within an enclosed cofferdam of approximately 1200mm x1200 running from the inboard side of the valve up to either the 17' flat or the main deck level, depending on the configuration proposed by the Contractor. This cofferdam will be supplied by CCG.

t. Supports for the ram and all auxiliaries must be the supplied by the Contractor.
u. The Contractor must provide technical drawings, manuals and reports to clearly identify all necessary input/output interfaces to the ship and its systems.
v. The Contractor must provide all engineering details to allow CCG to produce a technical design package sufficient for a shipyard to install and integrate onboard existing ships.
w. The through hull valve, docking bay, deployment/retreival ram and its support structure must fit either:
    i. wholly within a space with a maximum overall height of 4500mm as indicated on Figure 1 - inboard location sketch below (requires valve to be mounted 500mm clear of bottom shell plating, minimizing deployment distance), or
    ii. wholly within a space with maximum overall height of 6500mm as depicted on Figure 2 - outboard location sketch below (note that the 6500mm dimension excludes the depth below the tank top, which adds to the deployment distance)

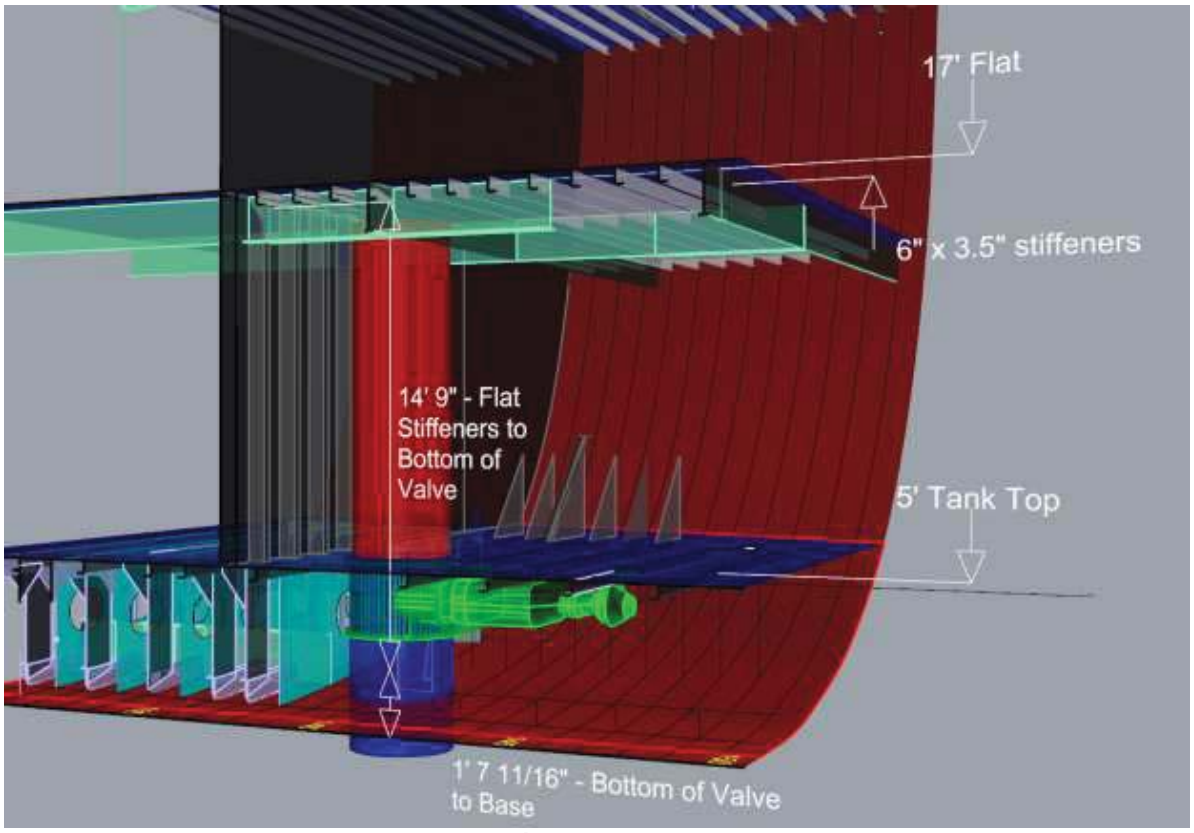

Figure 1 Inboard Location

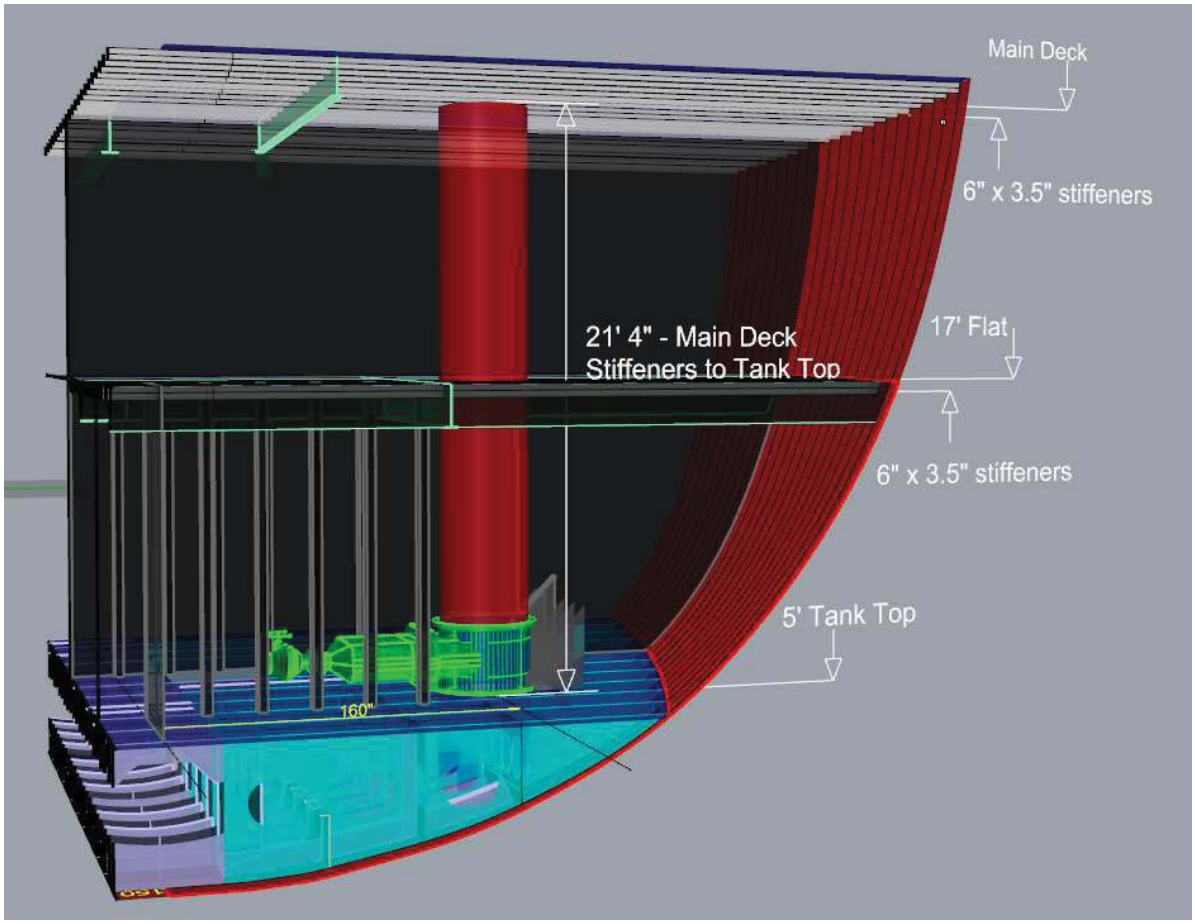

Figure 2 Outboard Location

2.2 Installation:

a. The deployment system must be of proven design.
b. The sonar system must have the ability to lengthen the sonar cables to a 50 metres maximum to facilitate the installation runs
c. The system must be capable of being deployed clear of the hull and retrieved back into the ship on a retractable RAM.
d. The Ram must be able to be deployed through a single hull valve approved for the purpose. The maximum size of valve must not exceed 46 inches in diameter. The valve must comply as a minimum to the following:

   i. API 600
   ii. ASME B16.34,
   iii. Pressure-Temperature rating ASME B16.34
   iv. Face to face / End to End ASME B16.10
   v. End Flange dimensions ASME B16.47
   vi. Testing and Inspection API 598
   vii. Steel Body

viii. * no ductile iron components in any part of valve assembly *

e. Contractor must supply a proven design (cite examples in existence) for proposed ram configuration and installation.
f. The complete deployment and retrieval system including ram, support structures, interfaces and controls must be delivered with the sonar as part of this supply.
g. The complete through hull valve, actuation, controls and interfaces must be delivered with this supply.
h. Contractor must supply a report documenting the estimated maximum survey speed while maintaining 100% bottom coverage for varying swath widths/angles and varying depths. The effectiveness of the proposed arrangement and technical solution must identify maximum survey speeds if limited by ram design and configuration.
i. Contactor must provide documentation describing the results of any Factory Acceptance testing that was conducted prior to shipping.
j. The contractor must provide on-site sonar installation services in conjunction with the needed refit work being carried out by the shipyard. This on-site support must consist of at least 1 field support engineer from the time installation starts until final acceptance after the Sea acceptance trials.
k. The wet-end installation must be tested and verified before dry-docking ends.
l. The Contractor must provide services of Survey Company and is wholly responsible to carry out the vessel coordinating survey including sonar, positioning, and motion devices. Coordination of activities is responsibility of Contractor.

2.3 Electronics:

a. The system electronics must provide 2˚x2˚ or better beam widths at Nadir with across-track spacing increasing proportional to the beam steering angle.
b. The sonar ping rate must be chosen by the sonar itself based on depth and swath sector or by the set sonar operating range. The sonar must allow the manual changing of the parameter within the design operating ranges.
c. The sonar must have automated functionality (controlled within manufacturer's proprietary or third-party software) such as auto-ranging, power, and gain, and must have the ability to manually manipulate these settings if required.
d. The system must use the IEEE 1588 Precise Time Protocol (PTP) or similar to maintain a coherent sense of time for all system components.
e. The system must operate in water temperatures ranging -2˚ C to +30˚C.

2.4 Swath Width/Beam Spacing:

a. The system must provide functionality in the acquisition software to control swath width and must have, at least, equidistant beam spacing.
b. The system must scale the beam spacing according to the set swath sector width so all beams are maintained.

2.5 Software/Computer

a. The sonar system must be supplied with software to support a computer-controlled interface for the acquisition and display of data.
b. The system must be supplied with computer hardware to operate the system.
c. The sonar system must provide means of networking with a computer subsystem and ancillary equipment via Ethernet connection and serial/parallel port.
d. The system's time base (for synchronizing a computer subsystem and ancillary equipment) must be synchronized to Universal Time Coordinated (UTC) via Global Positioning System (GPS) 1 pulse per second (1 PPS).
e. Contractor must provide a minimum of one year subscription for all software licenses necessary to operate and maintain the sonar system.

3.0 Product Support

a. Contractor must provide technical support via telephone and/or email, within 24 hours of a request, 7 days a week, to provide responses to routine technical questions.
b. Contractor must provide all product manuals at time of delivery. (PDF format is preferred)
c. Contractor must provide a comprehensive sounder spares kit of components, and supporting documentation, which are changeable by qualified CCG electrical/electronics personnel. Contractor must identify a layered approach to recommended sparing kits ranging from a minimum recommended list to a maximum recommended.
d. Contractor must provide a comprehensive deployment/retrieval system spares kit of components, and supporting documentation, which are changeable by non-OEM personnel. This must include those recommended spares by the valve and actuator manufacturer for a minimum five year maintenance period.
e. Replacements parts must be made available until 2030 (expected product life cycle).

4.0 Ancillary Equipment Supply

a. Contractor must supply a Trimble-Applanix POS/MV OceanMaster positioning and motion system.
   - System must be WAAS enabled
   - System must be GLONASS enabled
   - System must be MarineStar enabled with a 1 year subscription.
   - System must be supplied with three Trimble GA830 or equivalent antennas to receive the MarineStar signal and minimize or cancel out Iridium signal interference.
   - System must be capable of logging the raw information for post processing
b. Contractor must supply an AML micro-x SV-Exchange for surface sound speed measurement.
c. Contractor must supply a sound velocity profiler, pressure rated to 5000 metres depth.

d. Contractor must supply two LED monitors, keyboard and mouse. Monitor to have the following minimum requirements (ASUS PB238Q or equivalent):
   i. LED monitor
   ii. 23”
   iii. 1920 x 1080 Full HD
   iv. TFT Technology: IPS
   v. Project Image Brightness:250 cd/m2
   vi. Response time: 6 ms
   vii. Input Signal: HDMI, DVI-D, VGA, DisplayPort
   viii. Color Support: 16.7 million colors
   ix. Energy STAR qualified

e. Contractor must supply two operating personal computers with the following minimum requirements (MarineNav , Leviathan 19i or suitable equivalent):
   x. Rack mountable
   xi. I7 or better CPU
   xii. 8 GB RAM
   xiii. Minimum 1 TB of internal hard drive space
   xiv. Video card support for up 4 monitors
   xv. 2 Gigabit LAN ports
   xvi. serial ports
   xvii. 2 USB 3 ports

5.0 Deployment/Retrieval System Supply

a. Contractor must supply deployment/retrieval system
   - System must be corrosion resistant
   - Coated for durability
   - Self-contained
   - Rigid
   - Maximize deployment depth below hull
   - Fit within vertical constraint (as identified herein)
   - Fit with clearances through valve
   - Powered by Electric or electro/hydraulic
   - Available power 440/220 VAC, 3 Phase
   - Guided cabling system
   - Deployment actuation must be local with override from bridge
   - Deployment status (top/bottom/ power) displayed local, and on bridge
   - Incorporate an access or docking station to allow onboard access to the wet end for repair and replacement without the need to dry dock vessel.
   - Assembly must be directly bolted to the through hull valve.
   - Limit switches must be supplied

6.0 Through Hull Valve Supply

a. Contractor must supply through hull valve system

- Maximum valve dimensions (mm) must not exceed (L 3000 x W 1300 x H 1000) for the inboard location onboard. Outboard location dimensional constraints are not critical.
- Actuation by electric or electro-hydraulic.
- Available power supply 440/220 VAC, 3 Phase
- Actuation must be local panel only with override to close on bridge.
- Valve open/closed status must be displayed (local and bridge)
- A through hull stub piece with matching ASME flange for the through hull valve must be supplied. (min thickness 50 mm, Lloyd's Grade E steel). Length not less than 750 mm for inboard location arrangement and 1500mm for outboard arrangement.
- Limit switches must be supplied.

Optional Requirement over a 3 year period:

1.0 Up to an additional quantity (1) Multibeam Bathymetric Sonar Systems, meeting the specifications detailed above.

2.0 For each system purchased (including options), extended maintenance and warranty programs on all associated hardware for an additional 2 year period.

ANNEX "B" BASIS OF PAYMENT (Financial Bid Presentation Sheet)

Section	Description	(a) Price for CCGS Des Groseilliers (HST Excluded)	(b) Price for CCGS Pierre Radisson (HST Excluded)	(c) Price for Option (HST Excluded)	Subtotal (column (a) + (b) + (c)) (HST Excluded)
2	**Technical Description:**				
3	**Product Support**				
4	**Ancillary Equipment Supply**				
5	**Deployment/Retrieval System Supply**				
6	**Through Hull Valve Supply**				
TOTAL (Evaluation Price)					

Note:
(1) Evaluation price will be based on the totals of Column (a) + (b) + (c)
(2) Initial Contract value upon will be based on the totals of column (a) + (b)

ANNEX "C" - Technical Evaluation Criteria

Item	Minimum Mandatory Requirements	Criteria Mandatory/Rated
1	General Terms	
a	Sonar System proposed must be "off-the-shelf" commercially available	M
b	The multibeam sonar must be a beam forming multibeam sonar. Contractors proposing 2 separate and distinct systems to meet these specifications will not be considered for this requirement.	M
c	Contractors proposing Interferometric or Bathymetric Sidescan systems will not be considered for this requirement.	M
d	Deployment/retrieval system must use a powered ram through a Classification society approved through hull valve.	M
e	Contractor must provide preliminary engineering details to enable CCG to develop technical data package for shipyard installation.	M
f	Contractor must provide final installation and commissioning services and participate in an on-site sea trial aboard the ship(s).	M
2	Technical Description	
2.1	System Features	
a	System must have an operating frequency that allows a minimum depth of 10m and maximum depth of approximately 2500m.	M
b	System must utilize both Frequency Modulated (FM) and Continuous Wave (CW) pulse types.	M
c	The system must provide bathymetric data across a swath, at minimum, 3 times the water depth in up to 700 metres and must do +/- 65 degrees, roll stabilized swath sector in typical operating conditions.	M
d	The system must utilize sound speed at sonar head depth in real time.	M
e	The system must do receive beam focusing.	M
f	The system must ensure all components maintain a coherent sense of time with measurable latencies.	M

g	The system must provide imagery (acoustic backscatter intensity) data of the seafloor. The backscatter must be calibrated; source levels and gain settings should be recorded with the data.	M
h	The system must have as standard or be upgradeable to log acoustic backscatter of the water column (volume backscatter), preferably to a separate file.	M
i	Both the bathymetric data and imagery must be provided in a format which can be readily imported into CARIS HIPS/SIPS software package, preferably via a full function CARIS data import parser.	M
j	The system must be compatible with Hysweep or QPS QINSy data logging software.	M
k	The system must accept and utilize vessel motion correctors (i.e., heave, pitch, roll, and heading) from an Applanix POS/MV320 IMU, and sound speed profile correctors from AML sensors.	M
l	The system must do roll-stabilization. It must be capable of +/- 65 degrees swath sector with up to +/- 5 degrees of roll. The system must dynamically steer all beams based on the measured roll, not eliminate beams that roll outside of the desired sector.	M
m	The system must be capable of pitch and yaw stabilization at a minimum +/- 5 degrees of pitch and yaw.	M
n	The system must supply, within its data stream, a beam quality indicator that can be captured in Post-Processing for Quality Control.	M
o	The deployment/retrieval system must include all equipment, components assemblies and auxiliaries necessary to install, deploy, operate and retrieve the wet end of the sonar system.	M
p	The through hull valve, must be power actuated by way of an electrohydraulic power pack.	M
q	The deployment ram assembly must include a sea chest /docking bay inboard of the through hull valve allowing service access to the wet end transducers for repair and replacement.	M
r	Deployment system must be self-contained with proven watertight glands/stuffing boxes for water pressures.	M
s	Supports for the ram and all auxiliaries must be the supplied by the Contractor.	M
t	Contractor must provide technical drawings, manuals and reports to clearly identify all necessary input/output interfaces to the ship and its systems.	M

u	Contractor must provide all engineering details to allow CCG to produce a technical design package sufficient for a shipyard to install and integrate onboard existing ships.	M
W	The through hull valve, docking bay, deployment/retrieval ram and its support structure must fit either:	M
W (i)	- wholly within a space with a maximum overall height of 4500mm as indicated on the inboard location sketch (requires valve to be mounted 500mm clear of bottom shell plating, minimizing deployment distance), or	M
W (ii)	- wholly within a space with maximum overall height of 6500mm as depicted on the outboard location sketch (note that the 6500mm dimension excludes the depth below the tank top, which adds to the deployment distance)	M
2.2	Installation	
a	Contractor responsible for supplying service of Survey Company to carry out vessel coordinating survey including coordination activities with Shipyard.	M
2.3	Electronics/Software	
a	The system electronics must provide 2˚x2˚ or better beam widths at Nadir with across-track spacing increasing proportional to the beam steering angle .	M + R
b	The sonar ping rate must be chosen by the sonar itself based on depth and swath sector or by the set sonar operating range. The sonar must allow the manual changing of the parameter within the design operating ranges.	M
c	The sonar must have automated functionality (controlled within manufacturer's proprietary or third-party software) such as auto-ranging, power, and gain, and must have the ability to manually override these settings if required.	M
d	The system must use the IEEE 1588 Precise Time Protocol (PTP) or similar to maintain a coherent sense of time for all system components.	M
e	The system must operate in water temperatures ranging -2˚ C to +30˚C.	M
f	The system must provide functionality in the acquisition software to control swath width and must have, at least, equidistant beam spacing.	M

g	The system must scale the beam spacing according to the set swath sector width so all beams are maintained.	M
h	The sonar system must be supplied with software to support a computer-controlled interface for the acquisition and display of data.	M
i	The system must be supplied with computer hardware to operate the system.	M
j	The sonar system must provide means of networking with a computer subsystem and ancillary equipment via Ethernet connection and serial/parallel port.	M
k	The system's time base (for synchronizing a computer subsystem and ancillary equipment) must be synchronized to Universal Time Coordinated (UTC) via Global Positioning System (GPS) 1 pulse per second (1 PPS).	M
l	Contractor must provide a minimum of one year subscription for all software licenses necessary to operate and maintain the sonar system.	M
3	Product Support	
a	Contractor must provide technical support via telephone and/or email, within 24 hours of a request, 7 days a week, to provide responses to routine technical questions.	M
b	Contractor must provide all product manuals at time of delivery. (PDF format is preferred)	M
c	Contractor must provide a comprehensive sounder spares kit of components, and supporting documentation, which are changeable by qualified CCG electrical/electronics personnel.	M
d	Contractor must provide a comprehensive deployment/retrieval system spares kit of components, and supporting documentation, which are changeable by non-OEM personnel. This must include those recommended spares by the valve and actuator manufacturer for a minimum five year maintenance period.	M
e	Replacements parts must be made available until 2030 (expected product life cycle).	M
4	Ancilliary Equipment Supply	
a (i)	Contractor must supply a Trimble-Applanix POS/MV OceanMaster positioning and motion system.	M
a (ii)	System must be WAAS enabled	M
a (iii)	System must be GLONASS enabled	M
a (iv)	System must be MarineStar enabled with a 1 year subscription.	M

a (v)	System must be supplied with three Trimble GA830 or equivalent antennas to receive the MarineStar signal and minimize or cancel out Iridium signal interference.	M
a (vi)	System must be capable of logging the raw information for post processing	M
b	Contractor must supply an AML micro-x SV-Exchange for surface sound speed measurement.	M
c	Contractor must supply a sound velocity profiler, pressure rated to 5000 metres depth.	M
d	Contractor must supply two 23 inch monitors, keyboard and mouse.	M
e	Contractor must supply operating PC with the following minimum requirements: - Rack mountable - I7 or better CPU - 8 GB RAM - Minimum 1 TB of internal hard drive space - Video card support for up 4 monitors - 2 Gigabit LAN ports - 4 serial ports - 2 USB 3 ports	M
5	Deployment/Retrieval System Supply	
a	Contractor must supply deployment/retrieval system of proven design	M + R
b	System must be corrosion resistant	M
c	Coated for durability	M
d	Self-contained	M
e	Rigid	M
f	Maximize deployment depth below hull (MINIMUM IS 500MM)	M + R
g	Fit within vertical constraint (inboard vs outboard)	M + R
h	Fit with clearances through valve	M
i	Powered by Electric or electro/hydraulic	M
j	Available power 440/220 VAC, 3 Phase	M
k	Guided cabling system	M
l	Deployment actuation must be local with override from bridge	M
m	Deployment status (top/bottom/ power) displayed local, and on bridge	M
n	Incorporate an access or docking station to allow onboard access to the wet end for repair and replacement without the need to dry dock vessel.	M
o	Assembly must be directly bolted to the through hull valve.	M

p	Limit switches must be supplied	M
6	Through Hull Valve Supply	
a	Contractor must supply through hull valve system	M
b	Maximum valve dimensions (mm) must not exceed (LxBxh)(3000 x1300 x1000) for the inboard location onboard. Outboard location dimensional constraints are not critical.	M + R
c	Actuation by electric or electro-hydraulic.	M
d	Available power supply 440/220 VAC, 3 Phase	M
e	Actuation must be local panel only with override to close on bridge.	M
f	Valve open/closed status must be displayed (local and bridge)	M
g	A through hull stub piece with matching ASME flange for the through hull valve must be supplied. (min thickness 50 mm, Lloyd's Grade E steel). Length not less than 750 mm for inboard location arrangement and 1500mm for outboard arrangement.	M
h	Limit switches must be supplied.	M
7	Optional Requirement over a 3 year period:	
a	Up to an additional quantity (1) Multibeam Bathymetric Sonar Systems, meeting the specifications detailed above.	M
b	For each system purchased (including options), extended maintenance and warranty programs on all associated hardware for an additional 2 year period.	M

ANNEX "D" Point rated technical scoring

Importance	Impact on Hull	Points	Weightings	Technically Highest Possible	Technically Lowest Possible
5	**Valve size (Technical Evaluation Criteria 6b)**		**5**		
	<38	5		25	
	38 - 40	4			
	40 - 42	3			
	42 - 44	2			10
	44 - 46	1			
	Impact on Sounding (Technical Evaluation Criteria 5g)				
3	**Location**		**7.5**		
	Inboard (mandatory it not project above 17' Flat)	2		15	
	Outboard (mandatory it not project above Main deck)	1			7.5
2	**Deployment depth below baseline (Technical Evaluation Criteria 5f)**		**2**		
	>0.99 m	5		10	
	0.8-0.9	4			
	0.7-0.8	3			
	0.6-0.7	2			
	0.5-0.6	1			2
4	**Deployment System (Technical Evaluation Criteria 5a)**		**7**		
	Proven design and arrangement	3		21	
	Modification on Proven design (strength and sizing only)	2			
	Modelled from proven design (strength, size and components reconfigured)	1			7
1	**Sounder Performance (Technical Evaluation Criteria 2.3 a)**		**2**		
	1x1	4		8	
	1 x 2	3			
	1.5 x 1.5	2			
	2 x 2	1			2

ANNEX "E" Basis of Selection

1 To be declared responsive, a bid must:

a. comply with all the requirements of the bid solicitation; and

b. meet all mandatory criteria; and

2 Bids not meeting (a) and (b) will be declared non-responsive.

3 The selection will be based on the highest responsive combined rating of technical merit and price. The ratio will be 50 % for the technical merit and 50 % for the price.

4 To establish the technical merit score, the overall technical score for each responsive bid will be determined as follows: total number of points obtained / maximum number of points available multiplied by the ratio of 50 %.

5 To establish the pricing score, each responsive bid will be prorated against the lowest evaluated price and the ratio of 50 %.

6 For each responsive bid, the technical merit score and the price score will be added to determine its combined rating.

7 Neither the responsive bid obtaining the highest technical score nor the one with the lowest evaluated price will necessarily be accepted. The responsive bid with the highest combined rating of technical merit and price will be recommended for award of a contract.

The table below illustrates an example of the basis of selection above where all three bids are responsive and the selection of the contractor is determined by a 50:50 ratio of technical merit and price, respectively. The total available points equals 79 and the lowest evaluated price is $45,000 (45).

Basis of Selection - Highest Combined Rating Technical Merit (50%) and Price (50%)

		Bidder 1	Bidder 2	Bidder 3
Overall Technical Score		70/79	71/79	68/79
Bid Evaluated Price		$55,000.00	$50,000.00	$45,000.00
Calculations	**Technical Merit Score**	70/79 x 50 = 44.30	71/79 x 50 = 44.94	68/79 x 50 = 43.04
	Pricing Score	45/55 x 50 = 40.91	45/50 x 50 = 45.00	45/45 x 50 = 50.00
Combined Rating		85.21	89.94	93.04
Overall Rating		3nd	2rd	1st

ANNEX "F" to PART 3 OF THE BID SOLICITATION

ELECTRONIC PAYMENT INSTRUMENTS

The Bidder accepts to be paid by any of the following Electronic Payment Instrument(s):

( ) VISA Acquisition Card;

( ) MasterCard Acquisition Card;

( ) Direct Deposit (Domestic and International);

( ) Electronic Data Interchange (EDI);

( ) Wire Transfer (International Only);

( ) Large Value Transfer System (LVTS) (Over $25M)

ANNEX "G" to PART 5 OF THE BID SOLICITATION

FEDERAL CONTRACTORS PROGRAM FOR EMPLOYMENT EQUITY – CERTIFICATION

I, the Bidder, by submitting the present information to the Contracting Authority, certify that the information provided is true as of the date indicated below. The certifications provided to Canada are subject to verification at all times. I understand that Canada will declare a bid non-responsive, or will declare a contractor in default, if a certification is found to be untrue, whether during the bid evaluation period or during the contract period. Canada will have the right to ask for additional information to verify the Bidder's certifications. Failure to comply with any request or requirement imposed by Canada may render the bid non-responsive or constitute a default under the Contract.

For further information on the Federal Contractors Program for Employment Equity visit Employment and Social Development Canada (ESDC) – Labour's website.

Date:_____(YYYY/MM/DD) (If left blank, the date will be deemed to be the bid solicitation closing date.)

Complete both A and B.

A. Check only one of the following:

( ) A1. The Bidder certifies having no work force in Canada.

( ) A2. The Bidder certifies being a public sector employer.

( ) A3. The Bidder certifies being a federally regulated employer being subject to the *Employment Equity Act*.

( ) A4. The Bidder certifies having a combined work force in Canada of less than 100 permanent full-time and/or permanent part-time employees.

A5. The Bidder has a combined workforce in Canada of 100 or more employees; and

( ) A5.1. The Bidder certifies already having a valid and current Agreement to Implement Employment Equity (AIEE) in place with ESDC-Labour.

OR

( ) A5.2. The Bidder certifies having submitted the Agreement to Implement Employment Equity (LAB1168) to ESDC-Labour. As this is a condition to contract award, proceed to completing the form Agreement to Implement Employment Equity (LAB1168), duly signing it, and transmit it to ESDC-Labour.

B. Check only one of the following:

( ) B1. The Bidder is not a Joint Venture.

OR

( ) B2. The Bidder is a Joint venture and each member of the Joint Venture must provide the Contracting Authority with a completed annex Federal Contractors Program for Employment Equity - Certification. (Refer to the Joint Venture section of the Standard Instructions)