Department of Public Works | Ministère des Travaux publics

MENARD, MARSAN & THIBEAULT
CONSULTING ENGINEERS
188 OUEST, ST-GERMAIN, RIMOUSKI, QUE.

A. detail no. / détail no
B. location dwg. no. / sur feuille no
C. dwg. no. / feuille no

date: 5 SEPT. 1968 — revisions: GENERAL

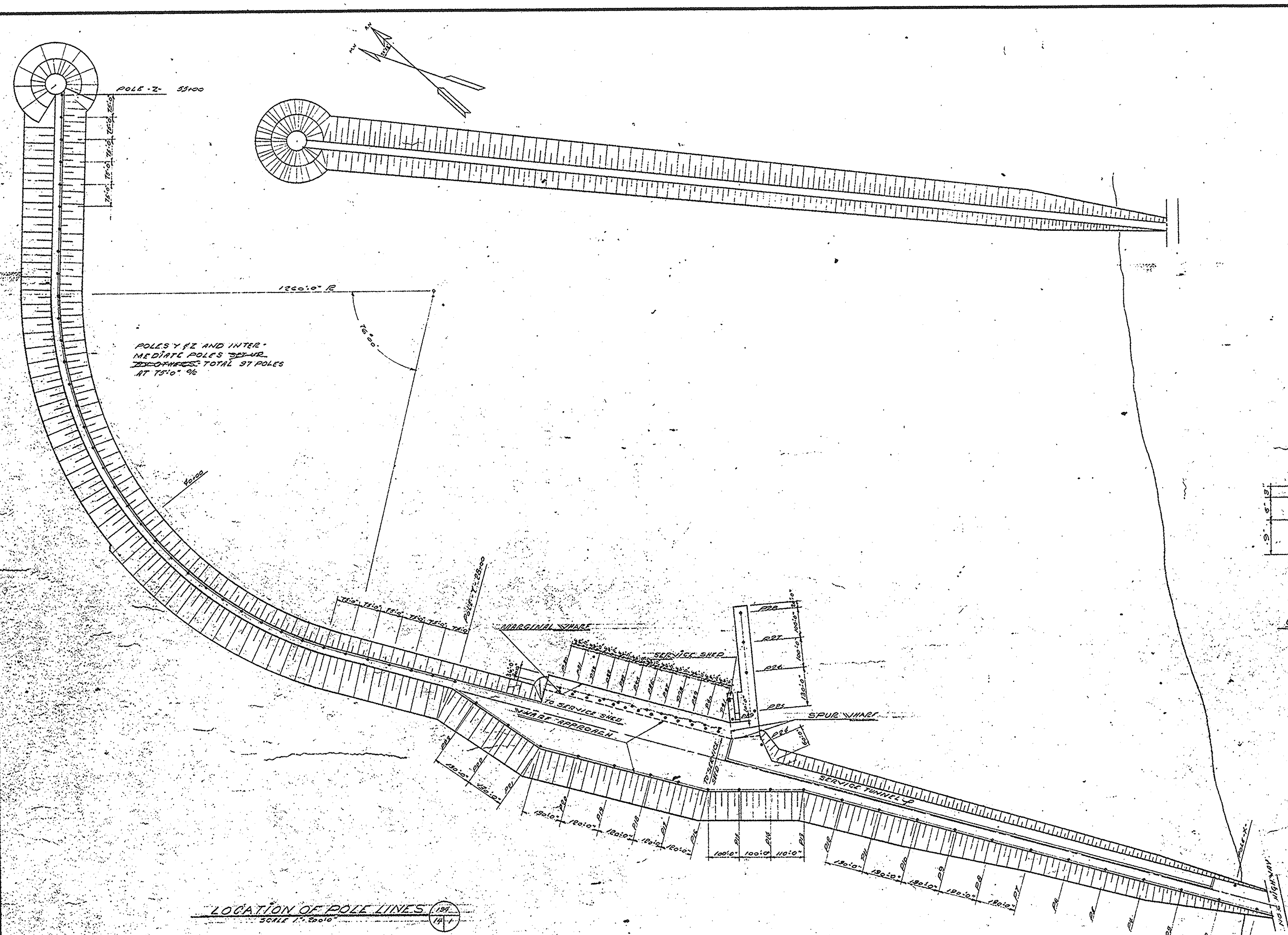

LOCATION OF POLE LINES (134 / 14-1)
SCALE 1"=200'-0"

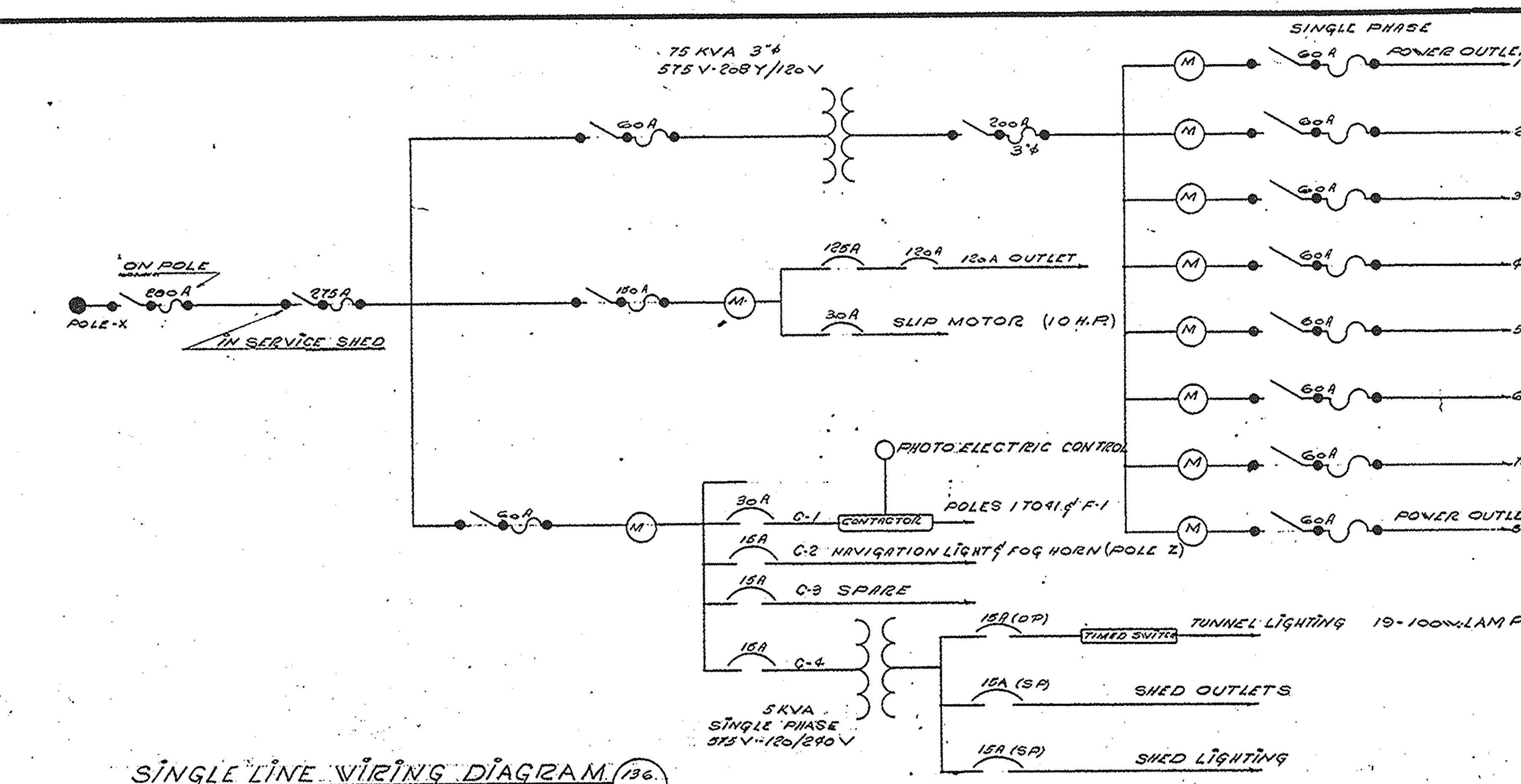

SINGLE LINE WIRING DIAGRAM (136 / 14-14)
N.T.S.

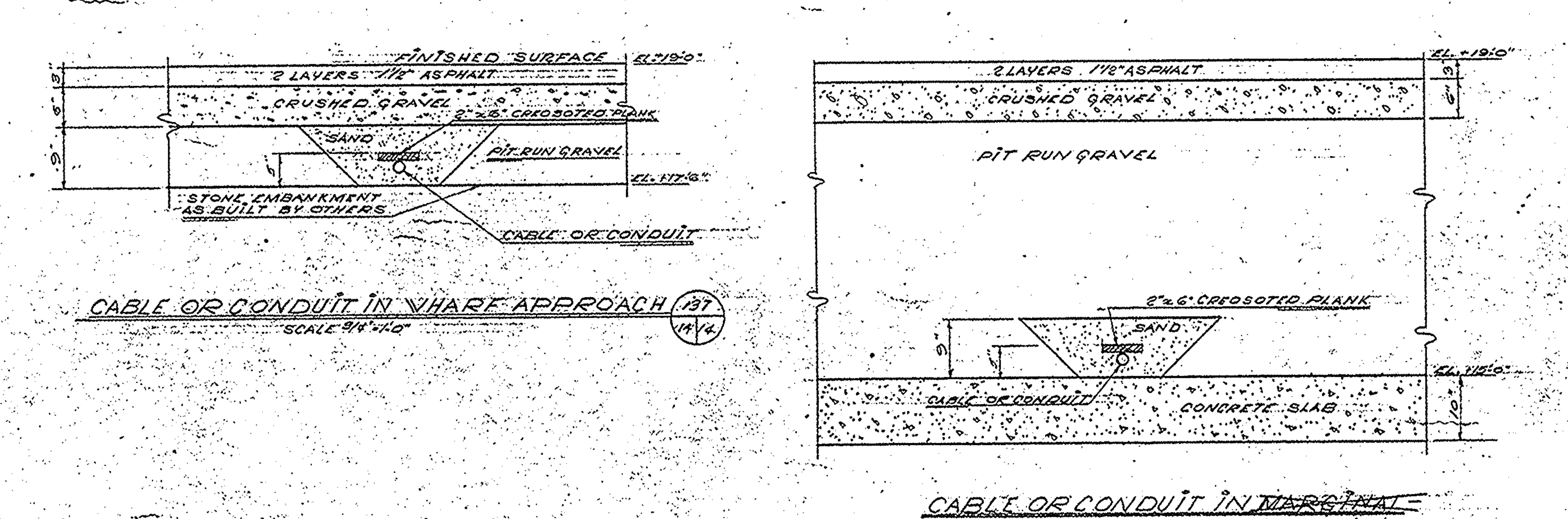

CABLE OR CONDUIT IN WHARF APPROACH (137 / 14-14)
SCALE 3/4"=1'-0"

CABLE OR CONDUIT IN MARGINAL AND SPUR WHARVES (138 / 14-14)
SCALE 3/4"=1'-0"

FROM	TO	NO. OF CONDUCTORS	GAUGE	TYPE	CONDUIT	FROM	TO	NO OF CONDUCTORS	GAUGE	TYPE	CONDUIT
POLE-X	SER. SHED	3	500 MCM	RWU	GALV. 3" Ø	SERVICE SHED	P.O. 1	3	4/0	RWU	GALV. 2 1/2" Ø
SERVICE SHED	P-13	3-1 GROUNDING SHELL	#8	CORFLEX P.V.C. JACKET	—	" " "	P.O. 2	3	3/0	RWU	" 2" Ø
P-13	P-23	" " "	#8	" " "	—	" " "	P.O. 3	3	2/0	RWU	" 2" Ø
P-13	P-1	" " "	#8	" " "	—	" " "	P.O. 4	3	2	RWU	" 1 1/4" Ø
SERVICE SHED	POLE-Y	2-1 SHELL	#8	" " "	—	" " "	P.O. 5	3	2	RWU	" 1 1/4" Ø
SERVICE SHED	P-29	3-1 SHELL	#8	RWU	GALV. 1" Ø	" " "	P.O. 6	3	2/0	RWU	" 2" Ø
P-29	P.26 P.26 P.27 P.28	3	#8	RWU	GALV. 1" Ø	" " "	P.O. 7	3	2/0	RWU	" 2" Ø
P-29	P-24	3	#8	RWU	GALV. 1" Ø	" " "	P.O. 8	3	2	RWU	" 1 1/4" Ø
P-30	P-41	3	#8	RWU	GALV. 1" Ø	" " "	F-1	2	10	RH	" 3/4" Ø
POLE-Y	POLE-Z	3	#6	W'PROOF WIRE	—		~				
SERVICE SHED	T-10	3	#6	RWU	GALV. 1" Ø						
T-10	T-1	3	#8	RWU	GALV. 1" Ø						

SCHEDULE OF WIRING (135 / 14-14)

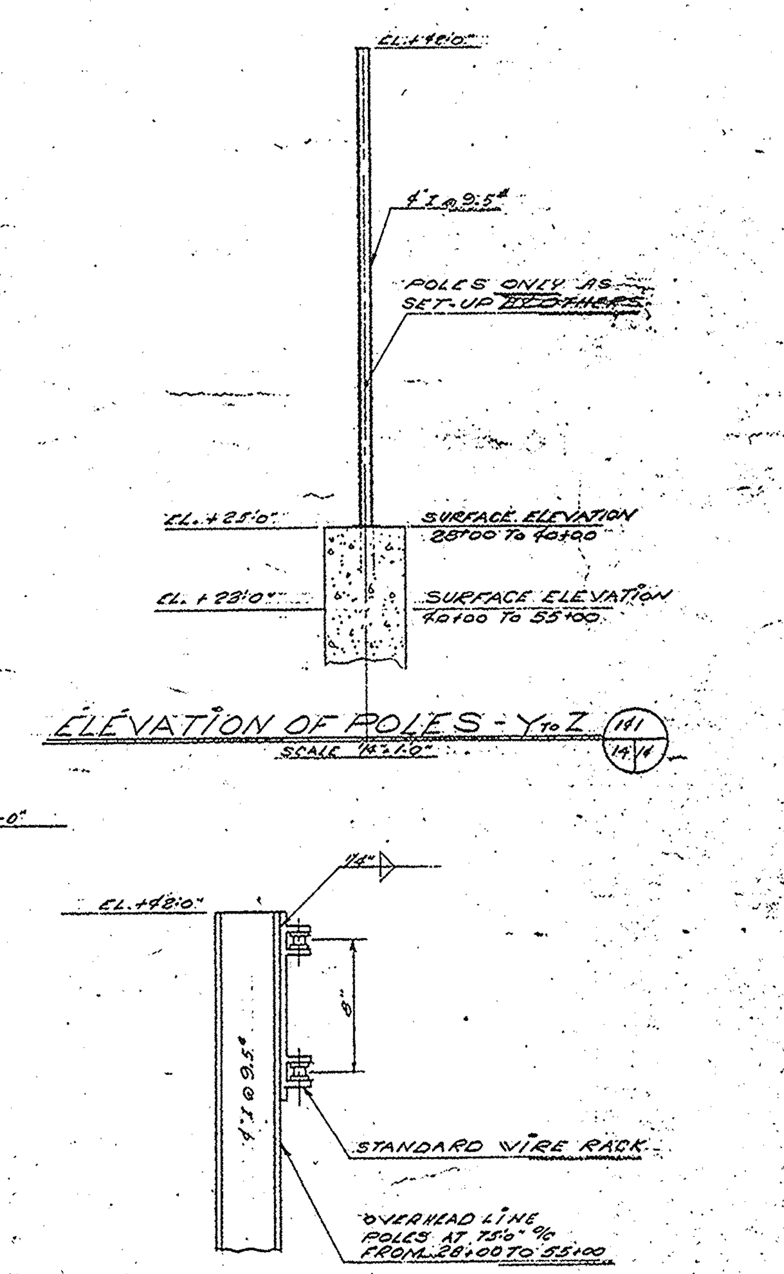

ELEVATION OF POLES - Y to Z (141 / 14-14)
SCALE 1/8"=1'-0"

WIRE RACK DETAILS (142 / 14-14)
SCALE 1 1/2"=1'-0"

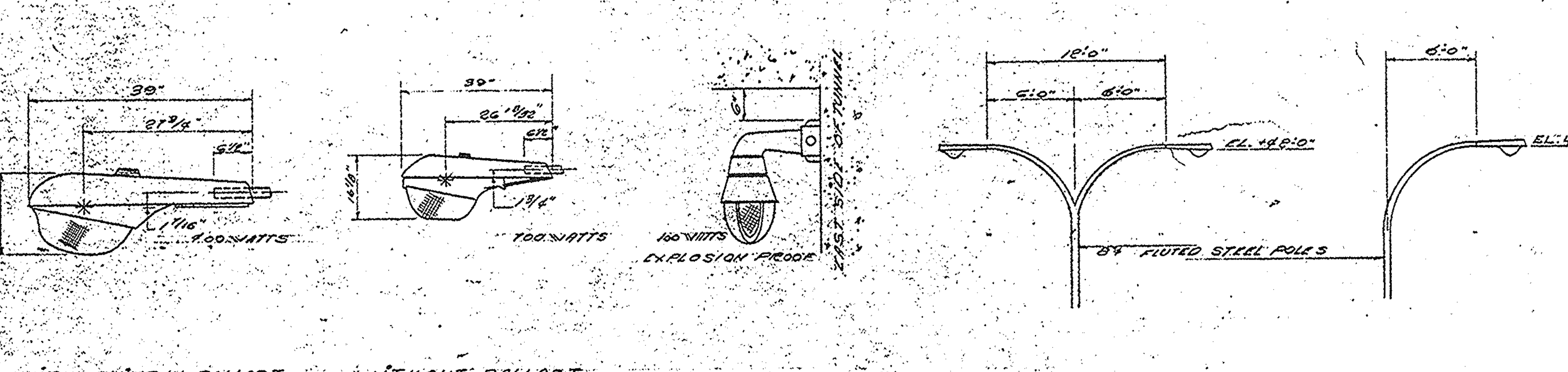

WITH BUILT-IN BALLAST — WITHOUT BALLAST

TYPE REQUIRED FOR POLES P-1 TO P-11, P-26 TO P-28 & P-30 TO P-41 — 28 REQUIRED

TYPE REQUIRED FOR POLES P-14 TO P-25 & P-29 — 13 REQUIRED

TYPE REQUIRED FOR TUNNEL T-1 TO T-19 — 19 REQUIRED

FOR POLES P-26 TO P-28 — 3 REQUIRED

FOR POLES P-1 TO P-25, P-29 & P-30 TO P-41

TYPE OF LUMINAIRES (139 / 14-14)

TYPE OF POLES (140 / 14-14)

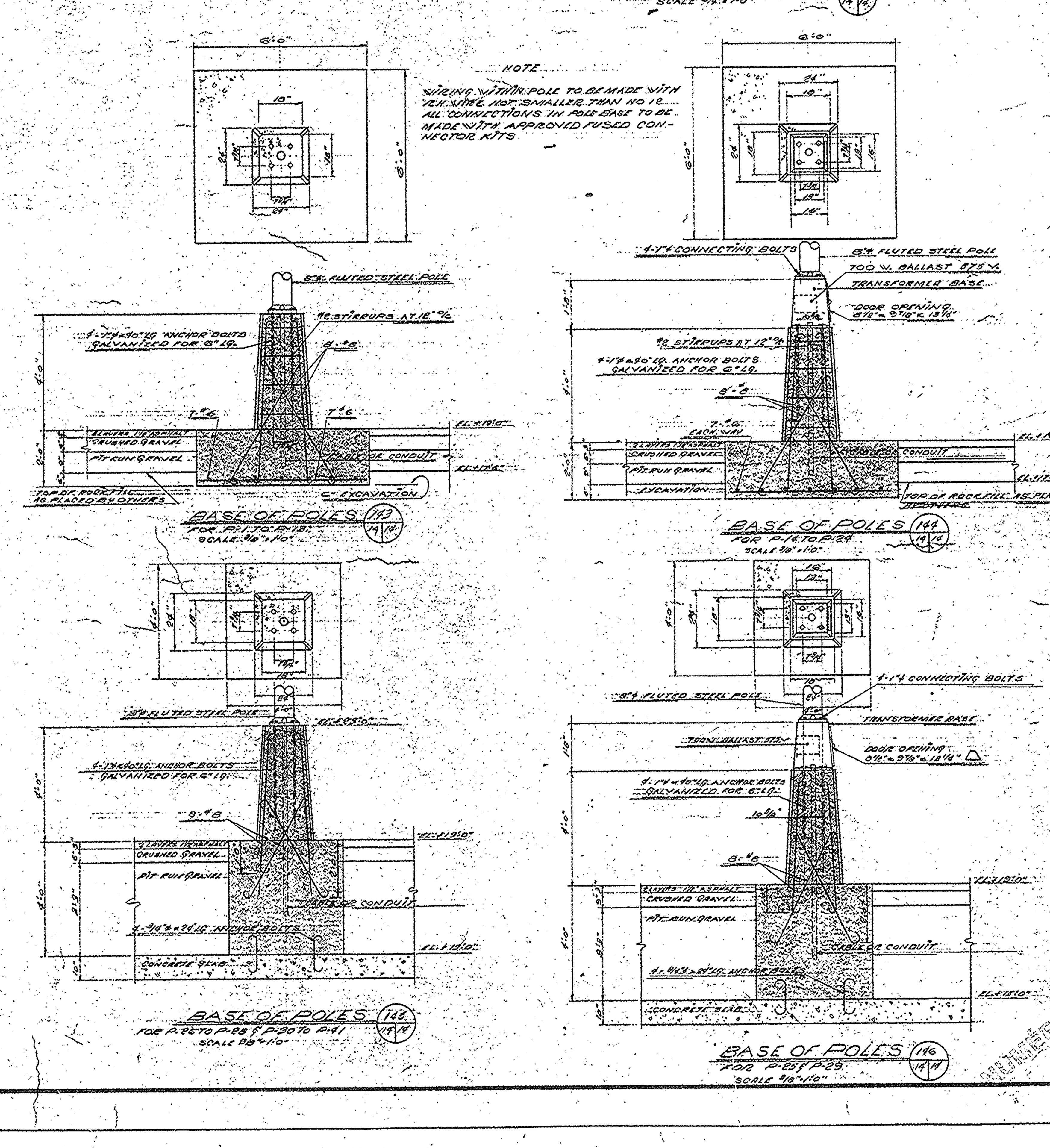

BASE OF POLES (143) FOR P-1 TO P-13 — SCALE 3/8"=1'-0"

BASE OF POLES (144) FOR P-14 TO P-24 — SCALE 3/8"=1'-0"

BASE OF POLES (145) FOR P-26 TO P-28 & P-30 TO P-41 — SCALE 3/8"=1'-0"

BASE OF POLES (146) FOR P-25 & P-29 — SCALE 3/8"=1'-0"

AS BUILT

Job title / Titre du projet: MATANE, MATAPEDIA-MATANE, QUE. HARBOUR IMPROVEMENTS PHASE 2 WHARVES AND SHEDS

Drawing title / Titre du dessin: ELECTRIC LIGHTING AND POWER SYSTEM

designed by / conçu par: L. Mc. L.

drawn by / dessiné par: P. P.

reviewed by / examiné par:

approved by / approuvé par:

job number / no du projet: C.A. M-17-10

dwg. no. / feuille no: 14 of 15

DPW 700A

87-175-288